HISTORIC PRESERVATION COMMISSION

Marc Elrich
County Executive

Robert K. Sutton
Chairman

Date: May 23, 2022

MEMORANDUM

TO: Mitra Pedoeem
Department of Permitting Services
FROM: Michael Kyne
Historic Preservation Section
Maryland-National Capital Park & Planning Commission
SUBJECT: Historic Area Work Permit # 867436: Construction of four (4) new single-family houses

---

The Montgomery County Historic Preservation Commission (HPC) has reviewed the attached application for a Historic Area Work Permit (HAWP). This application was **Approved with one (1) condition** at the August 14, 2019 HPC meeting, with revisions approved at the May 4, 2022 and May 18, 2022 HPC meetings.

1. **Final approval of all materials, including brackets, is delegated to staff.**

The HPC staff has reviewed and stamped the attached construction drawings**.**

THE BUILDING PERMIT FOR THIS PROJECT SHALL BE ISSUED CONDITIONAL UPON ADHERENCE TO THE ABOVE APPROVED HAWP CONDITIONS AND MAY REQUIRE APPROVAL BY DPS OR ANOTHER LOCAL OFFICE BEFORE WORK CAN BEGIN.

Applicant: 19501 Georgia LLC ((Luke Olson, Agent)
Address: Parcel 770, Brookeville

This HAWP approval is subject to the general condition that the applicant will obtain all other applicable Montgomery County or local government agency permits. After the issuance of these permits, the applicant must contact this Historic Preservation Office if any changes to the approved plan are made. Once work is complete the applicant will contact Michael Kyne at 301.563.3403 or michael.kyne@montgomeryplanning.org to schedule a follow-up site visit.

25 HIGH STREET, LOT 1
BROOKVILLE, MD 20833

PLAT DATA

ADDITION TO BROOKE GROVE
LOT 1
PARCEL 770
OLNEY 8TH ELECTION DISTRICT
MONTGOMERY COUNTY, MD

TOWN OF BROOKEVILLE:
ZONED: HISTORIC VILLAGE RESIDENTIAL

FRONT SETBACK= 15'
SIDE SETBACKS= 8'
REAR SETBACK= 40'

15,000 SF (0.344 ACRES)

BUILDING TO BE FULLY SPRINKLERED IN ACCORDANCE WITH 2018 IRC & NFPA13D

GRAPHIC SYMBOLS

- A / A-5 — SECTION SHEET NO.
- A / A-5 — SECTIONAL DETAIL SHEET NO.
- A / A-5 — DETAIL TARGET, ENLARGEMENT SHEET NO.
- N / A-12 — EXTERIOR ELEVATION SHEET NO.
- N / W 2 E / A-12 / S — INTERIOR ELEVATION SYMBOL DRAWING NO. SHEET NO.
- ELEV. 42.00 — DATUM ELEVATION
- 106 — ROOM NUMBER
- 4 — DOOR NUMBER
- W1 — WINDOW TYPE
- SF1 / A-6 — STOREFRONT ELEVATION
- 1 — REVISION NUMBER
- P1 — PARTITION TYPES SEE SCHEDULE
- T — TEMPERED GLASS

LIST OF DRAWINGS

001	COVER SHEET
002	SPECIFICATIONS
003	DOOR & WINDOW SCHEDULES
EC001	THERMAL ENVELOPE
EC002	THERMAL ENVELOPE
EC003	ENERGY CALCULATIONS
SITE	BUILDING PERMIT SITE PLAN
A100	BASEMENT PLAN
A101	FIRST FLOOR PLAN
A102	SECOND FLOOR PLAN
A103	ROOF PLAN
A200	FRONT ELEVATION
A201	RIGHT SIDE ELEVATION
A202	REAR ELEVATION
A203	LEFT SIDE ELEVATION
A300	BUILDING SECTION
A301	BUILDING SECTION
A302	BUILDING SECTION
A303	DETAILS
A304	DETAILS
A700	GARAGE PLANS
A701	GARAGE ELEVATIONS
A702	GARAGE SECTIONS & DETAILS
S0	FOUNDATION PLAN
S1	FIRST FLOOR FRAMING PLAN
S2	SECOND FLOOR FRAMING PLAN
S3	ROOF FRAMING PLAN
SD0	FOUNDATION DETAILS
SD1	FRAMING DETAILS
SD2	FRAMING DETAILS
SD3	FRAMING DETAILS
SG	GENERAL NOTES
SWB1	FIRST FLOOR WALL BRACING PLAN
SWB2	SECOND FLOOR WALL BRACING PLAN
SWB3	WALL BRACING DETAILS & SCHEDULE

CALCULATIONS

BASEMENT:	
FINISHED:	1,323.1 SF
UNFINISHED:	147.5 SF
TOTAL:	1,470.6 SF
FIRST FLOOR:	1,618.5 SF
FRONT PORCH:	178.9 SF
REAR PORCH:	207.6 SF
SIDE PORCH:	34.3 SF
SECOND FLOOR:	1,485.4 SF
DETACHED GARAGE:	484 SF
TOTAL GFA:	5,479.3 SF
HOUSE FOOTPRINT:	2,033.4 SF

LOT COVERAGE:

MONTGOMERY COUNTY
LOT= 15,000 SF
15,000 SF- 6,000 SF= 9,000 SF
9,000 SF x .001= 9.0%
30%- 9%= 21% MAX COVERAGE (3,150 SF)
2,102.5 SF/ 15,000 SF= 14.0%

MATERIAL SYMBOLS

- EARTH
- STEEL
- FINISH WOOD
- ROUGH LUMBER BLOCKING
- SLAT BOARD
- CONCRETE
- BRICK
- CONCRETE MASONRY UNIT
- GYPSUM SHEATHING
- ACOUSTICAL TILE

ABBREVIATIONS

ABOVE FINISH FLOOR	AFF	EACH	EA	INTERIOR	INT	PLATE	PL	VERTICAL	VERT
ACOUSTIC	ACST	EAST	E			PLUMBING	PLMB	VESTIBULE	VEST
ADJUSTABLE	ADJ	ELECTRIC, ELECTRICAL	ELEC	JANITOR'S CLOSET	JC	PLYWOOD	PLYWD	VINYL COMPOSITE TILE	VCT
AIR CONDITIONING	A/C	ELEVATION	EL	JOINT	JT	POLYVINYL CHLORIDE	PVC	VOLTS	V
AIR HANDLING	AH	ELEVATOR	ELEV	JOIST	JST	POUND	LB		
AIR HANDLING UNIT	AHU	EMERGENCY POWER	EM	JUNCTION BOX	JB	POUNDS PER SQUARE INCH	PSI	HALLBOARD	HB
ALTERNATE	ALT	EMPTY CONDUIT	EC			PREFABRICATED	PREFAB	WELDED WIRE FABRIC	WWF
ALTERNATE CURRENT	AC	ENGINEER	ENGR	LAMINATED	LAM	PREFINISHED	PREFIN	WIDTH	W
ALUMINUM	AL	ELECTRIC WATER COOLER	EWC	LAVATORY	LAV	PRELIMINARY	PRELIM	WINDOW	WDW
AMPERES	AMP	EXHAUST	EXH	LEFT HAND	LH			WITH	W/
ANCHOR BOLT	AB	EXISTING	EX	LENGTH	L	QUARRY TILE	QT	WITHOUT	W/O
ARCHITECT	ARCH	EXPANSION	EXP	LIBRARY	LIB			WOOD	WD
AT	@	EXPANSION JOINT	EXP JT	LINEAR FEET	LF	RADIUS	RAD, R		
AVERAGE	AVG	EXTERIOR	EXT	LONG LEG HORIZONTAL	LLH	REFRIGERATOR	REF	YARD	YD
				LONG LEG VERTICAL	LLV	REINFORCING	REINF		
BEAM	BM	FAHRENHEIT	F			REQUIRED	REQD		
BOARD	BD	FEET PER MINUTE	FPM	MAINTENANCE	MAINT	RESILIENT	RES		
		FEET, FOOT	FT	MANUFACTURER	MFR	RETURN AIR	RA		
CABINET	CAB	FINISH	FIN	MASONRY	MAS	REVISION	REV		
CATALOG	CAT	FIRE EXTINGUISHER CAB.	FEC	MASONRY OPENING	MO	RIGHT HAND	RH		
CEILING	CLG	FLOOR	FL	MAXIMUM	MAX	ROOM	RM		
CENTERLINE	CL	FLUORESCENT	FLOUR	MECHANICAL	MECH	ROUGH OPENING	RO		
CERAMIC TILE	CT	FIRE RATED	FR	MEDIUM	MED				
CLOSET	CLO			MEZZANINE	MEZZ	SCHEDULE	SCHD		
COLUMN	COL	GAUGE	GA	MINIMUM	MIN	SECTION	SECT		
COMPANY	CO	GALLON	GAL	MISCELLANEOUS	MISC	SERVICE SINK	SS		
CONCRETE	CONC	GALLONS PER MINUTE	GPM	MOUNTED	MTD	SIMILAR	SIM		
CONCRETE MASONRY UNITS	CMU	GALVANIZED	GALV	MULLION	MUL	SOUND TRANSMISSION	STM		
CONFERENCE	CONF	GENERAL CONTRACTOR	GC			SPECIFICATION	SPEC		
CONTINUOUS	CONT	GROUNDED FAULT INTERUPT.	GFI	NOT IN CONTRACT	NIC	SQUARE	SQ		
CONTROL JOINT	C.J	GYPSUM	GYP	NOT TO SCALE	NTS	STANDARD	STD		
COORDINATE	COORD	GYPSUM HALLBOARD	GWB	NUMBER	#, NO	STAND PIPE	ST		
CORRIDOR	CORR					STAINLESS STEEL	SS		
CUBIC FEET	CF	HANDICAPPED	HDCP	OFFICE	OFF	STATION	STA		
CUBIC FEET PER MINUTE	CFM	HARDWARE	HDW	ON CENTER	OC	STEEL	STL		
		HARDWOOD	HDWD	OPENING	OPNG	STORAGE	STOR		
DEDICATED	DED	HEIGHT	HGT, H	OPPOSITE	OPP	STRUCTURAL	STRUCT		
DEPARTMENT	DEPT	HERTZ	HZ	OUNCE	OZ	SUSPENDED CEILING	SUSP		
DEPTH	D	HOLLOW METAL	HM	OVERALL	OA				
DETAIL	DET	HORIZONTAL	HORIZ	OVERHEAD	OH	TELEPHONE	TEL		
DIAGONAL	DIAG	HORSE POWER	HP			THICK OR THICKNESS	THK		
DIAMETER	DIA	HOT WATER HEATER	HWH	PAINTED	PTD	THRESHOLD	THRSLD		
DIMENSION	DIM	HOOK	HK	PANEL	PNL	TILE	T		
DISHWASHER	DW			PARTITION	PTM	TO BE SELECTED	TBS		
DOOR	DR	INCH	IN	PERPENDICULAR	PERP	TONGUE & GROOVE	T & G		
DOWN	DN	INFORMATION	INFO	PERSONAL COMPUTER	PC	TOP	T		
DRAWING	DWG	INSIDE DIAMETER	ID	PHASE	PH	TYPICAL	TYP		
DRINKING FOUNTAIN	DF	INSULATED, INSULATION	INSUL	PLASTIC LAMINATE	P LAM				

PROJECT INFORMATION

CLIENT/CONTRACTOR
PHIL SARDELIS
10776 TUCKER STREET
BELTSVILLE, MD 20705
240-417-5333
philsardelis@gmail.com

ARCHITECT
GTM ARCHITECTS
CONTACT: NATE WHITE
7735 OLD GEORGETOWN ROAD
BETHESDA, MD 20814
(240) 333-2056
nwhite@gtmarchitects.com

CIVIL ENGINEER
CAS ENGINEERING
CONTACT: JARED SIMS CARHART, PD, MSE
10 SOUTH BENTZ STREET
FREDERICK, MD 21701
301-703-2346 (O)
303-217-1152 (C)
jcarhart@casengineering.com

STRUCTURAL ENGINEER
strucBIM ENGINEERS
CONTACT: KAUSHAL KANSARA, P.E.
20130 LAKEVIEW CTR. PLZ.
SUITE 400
ASHBURN, VA 20147
(703) 405-9732 (C)
kaushal@strucbim.com

PLANS PREPARED BASED ON THE FOLLOWING CODES:
INTERNATIONAL RESIDENTIAL CODE 2018

GTM ARCHITECTS

7735 OLD GEORGETOWN ROAD
SUITE 700
BETHESDA, MD 20814
(240)333-2000
(240)333-2001 FAX
WWW.GTMARCHITECTS.COM

Seal

STATE OF MARYLAND — NATHAN WHITE — 7243 — ARCHITECT

I certify that these documents were prepared or approved by me, and that I am a duly licensed architect under the laws of the State of Maryland, license number 5886. Expiration Date: 12/06/2022

Consultant

Project
25 High Street
LOT 1
25 HIGH STREET, BROOKEVILLE, MD 20833

Owner

Developer

Issue Description	Date
PERMIT SET	4-11-2022

GTM Project No.	18.0320
Checked By	GTM
Drawn By	NW/KF
Scale	AS NOTED

Sheet Title
COVER SHEET

Sheet No.
001

COPYRIGHT, 2019 GTM ARCHITECTS, INC.

FILE NAME:

SPECIFICATIONS FOR RESIDENTIAL CONSTRUCTION

The purpose of the following specifications is to establish the level of quality required for both materials and workmanship. These notes are intended as a general outline; specific and additional requirements are indicated on the drawings. Unless noted otherwise in the contract documents, all Products and Materials shall be installed in strict compliance with the manufacturer's recommendations. The contractor should also note that not all of the items mentioned below may apply to the project.

GENERAL REQUIREMENTS

1. All work shall conform to the International Residential Code (IRC), 2018 edition and all applicable sections of the Montgomery County code for single family construction and applicable building codes including (but not limited to) IECC 2018.
2. The General Contractor shall stake off area of new construction and designate trees and shrubs for removal as required. Protect all landscaping beyond the areas of construction.
3. The General Contractor shall coordinate phasing and time limits for new construction with the Owner, so as to establish an acceptable payment schedule related to the status of the project.
4. Any permits required for the project shall be obtained by the General Contractor, unless informed otherwise by the Architect that the permit has been obtained.
5. The General Contractor shall store materials and equipment in a safe and suitable place during the construction process. The Owner is not responsible for any losses of material. The contractor shall be responsible for damage to installed and (or) stored materials until substantial completion or as otherwise noted in the contract document.
6. All debris shall be periodically removed from the site so as to not create a physical or visual hazard to the Owner.
7. The General Contractor shall be licensed in Montgomery County, Maryland, and shall guarantee the project labor and materials for a period of one year after the Architect determines the work to be substantially complete, as per county laws.
8. The General Contractor shall provide competent daily supervision of the project.
9. The General Contractor shall notify the related authorities for inspection of the work as related to the specific areas required by the county.
10. The General Contractor shall Carry Workmen's Compensation Insurance for every person employed by him on the premises and shall maintain such insurance in full force during the entire time of this contract. The General Contractor shall carry Comprehensive General and Automotive Liability Insurance of $25,000 to $50,000 minimum. These requirements can be amended by the Owner if specified by the contract.
11. All drawings, specifications, and copies furnished by the Architect are the documents for the construction of this project only and shall not be used in any other circumstance.
12. The General Contractor shall carefully study the contract documents and report to the Architect any error, omission, or inconsistency they may discover.
13. The General Contractor shall provide and pay for all labor, materials, equipment, tools, machinery and other facilities and services necessary for proper execution and completion of the work, and shall guarantee no mechanic liens against the project at completion.
14. The Contract Sum is stated in the agreement and is the total amount payable by the Owner, which designates the addition, deletion, or revision to the contract. The Change Order must also designate the change in the original contract sum.
15. At least seven days before the date of each progress payment established by the agreement, the General Contractor shall submit to the Architect and Owner an itemized application designating which portion of the work has been completed.
16. The Contractor shall verify dimensions prior to construction, and all discrepancies shall be brought to the attention of the Architect so that clarifications can be made. The Contractor shall field verify all dimensions related to existing conditions. Written dimensions take precedence over scaled sizes. Do not scale drawings to determine missing dimensions.
17. The Contractor shall be responsible to have new utility line services (gas, electric, telephone) installed to the house connection/meter location.

DEMOLITION NOTES

1. Every care shall be taken during demolition to protect the house by means of temporary supports and braces as necessary to prevent any structural failure during removal and replacement of existing structural members.
2. Temporary walls and dust barriers shall be installed as necessary to prevent circulation of dirt and dust into portions of the house that are not part of the work.
3. All dashed walls, fixtures, windows, etc., are to be removed. See Demolition Sheets for additional information.
4. Conduct all demolition operations in compliance with applicable codes and ordinances.
5. Coordinate demolition with work of subcontractors.
6. Maintain the existing structure in a watertight condition at all times.
7. Provide the necessary enclosures to allow the owner to maintain comfortable temperatures within the occupied portions of the home during construction.

GENERAL STRUCTURAL NOTES

1. Work shall be done in accordance with the International Residential Code (IRC), 2018 Edition.
2. The design gravity live loads are as follows:
   Roof load (snow): 30 LL + 15 DL = 45 PSF
   Living Spaces: (1st Floor) 40 LL + 15 DL = 55 PSF
   Sleeping Spaces: (2nd Floor) 30 LL + 15 DL = 45 PSF
   Exterior Decks: 60 LL + 15 DL = 75 PSF
   Live Load Deflection Limitation for floors and stairs shall be L/360
   Live Load Deflection Limitation for roofs shall be L/240

FOUNDATIONS

1. The foundation for the structure has been designed for the assumed bearing pressure of 1,500 PSF. This is to be verified by the contractor prior to the footings being poured. It is also assumed that there is no water condition present.
2. Basement walls have been designed for an assumed equivalent fluid pressure of 55 PSF.
3. Excavations for spread footings and continuous footings shall be cleaned and hand tamped to a uniform surface.
4. Slabs on grade shall be underlaid by a minimum of 4" of granular material having a maximum aggregate size of 1.5 inches and no more than 2% fines. Prior to placing the granular material, the floor subgrade shall be properly compacted, proofrolled, free of standing water, mud, and frozen soil. Before placement of concrete, a (min. 6 mil poly) vapor barrier shall be placed on top of the granular fill and sealed to vertical foundation walls.
5. Bottoms of all exterior footings shall be 2'-6" minimum below finished grade. Footings shall project a minimum of 12" into undisturbed existing natural ground having allowable bearing capacity stated. Depths of footings subject to change if soil conditions are other than assumed.

ENERGY CONSERVATION

1. The following provisions for thermal resistance meet or exceed the requirements stipulated by the 2018 International Energy Conservation Code (IECC), climate zone 4A. These values are the minimum acceptable. See drawings for specific values required for the project.
2. Insulation

		IECC
A.	Ceiling (of uppermost story)	R-49, or R-38 continuous
B.	Vaulted Ceiling sf or 20% of total insulated ceiling area R-30 allowance	R-49 w/lesser of 500
C.	Frame walls (with storm window or double glazing)	R-20 or 13+5 (exterior)
D.	Rim Joists	Equal to wall below
E.	Floors over unheated spaces (including floor overhangs)	R-38
F.	Masonry walls (enclosed heated living areas)	R-13 or R-10 continuous
G.	Slab on grade (heated space) 24" Perimeter Insulation	R-10
H.	Windows	U-0.32 SHGC-0.40
I.	Doors	See section R402.3.4

3. Air Infiltration
   A. Provide $\frac{1}{4}$" x 5.5" compressible sill sealer between foundation wall and all sill plates. Sill sealer shall be set such that no gaps exist at sealer butt joints.
   B. Windows: Not exceeding three tenths (0.3) CFM of sash crack
   C. Sliding glass doors: not exceeding three tenths (0.3) CFM per square foot of door area
   D. Swinging doors: Not exceeding five tenths (0.5) CFM per square foot of door area. Provide 1" compressible sill sealer between foundation wall and all sill plates.
   E. Building thermal envelopes shall be tested per IECC R402.4.1.2 and verified as having air leakage not to exceed 3 air changes per hour.
   F. Recessed lighting in the thermal envelope shall comply with IECC R402.4.5
   G. Systems duct and piping installation shall comply with IECC R403 including Whole-House Mechanical Ventilation system installation.

TERMITE CONTROL SOIL TREATMENT

1. Treat soil with Bayer Corporation, Premise 75, in strict accordance with manufacturer's recommendations.
2. Remove all extraneous sources of wood cellulose and other edible materials such as wood debris, tree stumps and roots, stakes, formwork, and construction waste wood from soil within and around foundations. Loosen, rake, and level soil to be treated except previously compacted areas under slabs and footings.
   A. Slabs-on-Grade and Basement Slabs: Under ground-supported slab construction, including footings, building, slabs, and attached slabs as an overall treatment. Treat soil materials before concrete footings and slabs are placed.
   B. Foundations: Adjacent soil including soil along the entire inside perimeter of foundation walls, along both sides of interior partition walls, around plumbing pipes and electric conduit penetrating the slab, and around interior column footers, piers, and chimney bases; also along the entire outside perimeter, from grade to bottom of footing. Avoid soil washout around footings.
   C. Crawlspaces: Soil under and adjacent to foundations as previously indicated. Treat adjacent areas including around entrance platform, porches, and equipment bases. Apply overall treatment only where attached concrete platform and porches are on fill or ground.Crawlspaces used as plenum spaces strictly follow manufacturer's recommendedations.
   D. Along driplines of roof overhangs without gutters.
   E. Where condensate lines from mechanical equipment drip or drain to soil.
   F. At plumbing penetrations through ground-supported slabs.
   G. Other sites and locations as determined by licensed installer.

WARRANTY

Special Warranty: Manufacturer's standard form, signed by Applicator and Contractor certifying that termite control work, consisting of applied termiticide treatment, will prevent infestation of subterranean termites. If subterranean termite activity or damage is discovered during warranty period of five (5) years from Substantial Completion, re-treat soil and repair or replace damage caused by termite infestation.

CONCRETE

1. All concrete construction shall conform to the latest A.C.I. code 332 and shall comply with ACI 117, "Specifications for Tolerances for Concrete Construction and Materials" unless modified by requirements in the Contract Documents.
2. Concrete shall have natural sand fine aggregates and normal weight coarse aggregates conforming to ASTM C33, Type 1 Portland Cement conforming to ASTM 150, and shall have a minimum 28-day compressive strength (F/C) as follows:
   - F/C = 2,500 PSI for footings, interior slabs on grade (except garages) and fill in concrete blocks
   - F/C = 3,000 PSI for foundation walls exposed to weather.
   - F/C = 3,500 PSI for drives, porches, walks, steps, and garage slabs.
   - F/C = 4,000 PSI for precast concrete units.
3. All poured in place concrete exposed to weather conditions, including the garage floor, shall be air entrained by 6% of concrete volume. No calcium chloride or other admixtures shall be used except as approved in writing by the Owner.
4. Slabs on grade: except where otherwise noted, shall be min. 4" thick, reinforced with 6x6 W1.4xW1.4 WWF Lap mesh 6" in each direction. Slab shall be placed on a layer of 6 mil polyethylene, sealed to fdn. walls, over a 4" layer of washed gravel. Refer to drawings for location of thermal insulation.
5. Concrete finish: Exposed exterior steps, stoops and slabs shall first have a steel trowel finish and then a very light broom finish. Exposed interior and garage shall receive a steel trowel finish.
6. Expansion joints: Non-organic, Owner approved, expansion joint material shall be cast in place where slabs abut masonry or concrete walls to prevent bonding between the two materials.
7. Curing: Exposed concrete surfaces shall be sealed with an approved chemical curing compound within one hour of the final troweling. Curing compound label shall state that its use will not interfere with adhesion of subsequent floor finishes.
8. Reinforcing steel: Reinforcing steel for the ties shall be intermediate grade deformed billet steel conforming to ASTM spec. A615-40. All other reinforcing steel shall conform to ASTM spec. A615-60. Welded wire fabric to conform to ASTM A-185. Fabric shall be supplied in flat sheets and lapped to mesh at splices. All reinforcing shall be detailed, fabricated and installed in accordance with the latest detailing manual A.C.I. 315.
9. Reinforcement designated as "continuous" shall lap 36 bar diameters at splices unless noted otherwise.
10. Horizontal footing and walls: reinforcement shall be continuous and shall have 90 degree bends and extensions, or corner bars of equivalent size lapped 36 bar diameters, at corners and intersections.
11. Footings:
    A. Bottom of footings shall extend a minimum of 2'-6" below any surface subject to freezing: footings shall extend at least 12" into undisturbed soil or set on controlled compacted fill. Depth of footing subject to change if soil conditions are other than assumed. Bearing value of soil is assumed to be 1,500 PSF with no water condition present. Minimum bearing value of controlled fill shall be certified by a licensed geotechnical engineer.
12. Anchor bolts: set anchor bolts or approved straps as shown. Bolts for wood sill plates shall be $\frac{1}{2}$" in diameter and project 8" into concrete; set straps or bolts 12" max from end of any plate and 6'-0" max O.C. spacing, unless shown otherwise.

MASONRY

1. Brick shall conform to ASTM C-62. Mortar shall conform to federal specifications SS-C-18IE-type II. Lay brick only when outside temperature is 45° F and rising. Protect all work from cold and frost and ensure that mortar will cure without freezing. Calcium chloride and antifreeze admixture will not be acceptable.
2. Bearing steel and wood beams shall be supported on solid masonry piers as indicated. Other structural members (lintels, etc.) shall be supported on 8" of solid masonry. All beams and lintels shall have minimum horizontal bearing of 4".
3. Anchor bolts: Set anchor bolts or approved anchor straps as required. Bolts for wood sill plates shall be $\frac{1}{2}$" diameter and project 16" into masonry. Set bolts or straps 12" max. from end of any plate.
4. CMU walls shall have horizontal wire joints reinforcement at 16" O.C. vertically, or as indicated.
5. Provide 4" solid masonry on all sides of joists or beams entering masonry party walls.
6. Brick Veneer:
   A. Secure brick veneer with 16 GA hot-dipped zinc coated wall ties at 16" O.C. horizontally and vertically.
   B. Provide flashing at first course above grade, at lintels, sills and elsewhere as shown. Provide $\frac{3}{16}$" diameter tube weeps or cellular plastic head joint-type weeps at 24" O.C.
   C. Provide through-wall flashing above all unsheltered openings. Flashing shall be end-dammed at all terminations.
   D. Install high-density polyethylene or polyester cavity drainage material, equal to "mortar net," above all flashing. Material shall be sized to fill the width of the cavity.
7. Stone Veneer:
   A. Vapor permeable weather-resistive barriers: two-ply asphalt saturated Kraft Grade D breather type sheathing paper.
      - Basis of design is FortifiberΦ / two-ply super jumbo texΦ 60 minute
      - Reference standard; federal specification W-B-790A, Type I, Grade D, Style 2
      - Moisture vapor transmission: 35 grams minimum; ASTM E 96
      - Water resistance: 150 minutes (Professional), ASTM D 779
8. C.M.U.'s to have water repellent block admixture; 'Dry-Block' by W.R. Grace recommended.
9. Exterior mortar to have water repellent admixture.
10. Unless noted otherwise, tool all joints concave.
11. Fully bed in mortar face shells and webs of first course of CMU.
12. All masonry joints shall be fully filled with mortar, including head joints.

ADHERED MASONRY VENNER

1. The adhered Masonry Veneer (AMV) system shall be installed in compliance with IRC R703.12 and ASTM C1780 "Standard Practice for Installation Methods for Cement-based Adhered Masonry Veneer" and The Masonry Veneer Manufacturers Associations (MVMA) "Installation Guide and Detailing Options for Compliance with ASTM C1780". The cladding unit manufacturers installation recommendations are also to be followed.
2. Two separate layers of Water Resistant Barrier (WRM) shall be provided over the sheating substrate.
3. Galvanized lath shall be securely fastened to the wall structure with approved fasteners. A mortar scratch coat shall fully encapsulate the lath and have a scored surface.
4. Cladding units shall be set over a fully cured mortar scratch coat. Cladding units shall be adjusted to comply with the cladding unit manufacturers recommendations and ASTM C1780. Doors and windows shall be adjusted to provide proper operation of opening.
5. Joints shall be filled with "thumb-print hard" adhesive mortar with a slightly concave profile, unless noted otherwise. Prior to joint filling a field mock-up shall be provided for color and workmanship approval.

STEEL

1. Structural steel shall conform to ASTM A36
2. Steel beams shall conform to ASTM A572 Grade 50.
3. All steel angles, lintels, beams, columns, etc. are to be shop primed with red lead or red oxide primer or approved equal. Structural steel at or below grade shall be painted with two coats on an asphaltic base paint and protected with a minimum of 2" solid masonry or concrete.
4. For all openings or recesses in brick or brick-faced masonry walls not specifically detailed, provide one steel angle for each 4" of wall thickness. Provide lintels according to the schedule below:

Lintel	Masonry Opening	Min. Bearing
L 3-1/2 X 3-1/2 X 1/4	Up to 3'-0"	4"
L 3-1/2 X 3-1/2 X 5/16	3'-1" to 4'-0"	6"
L 4 X 3-1/2 X 1/4	4'-1" to 5'-0"	6"
L 4 X 3-1/2 X 5/16	5'-1" to 6'-0"	6"
L 5 X 3-1/2 X 5/16	6'-1" to 7'-0"	8"
L 6 X 4 X 3/8	7'-1" to 8'-0"	8"

Note: For openings greater than 8'-0", consult with Architect and Engineer.

WOOD & CARPENTRY

1. Unless otherwise noted on drawings, all structural wood members shall be #2 Southern Pine or equal, with the following combination of unit stresses:

Extreme fiber stress in bending	1,200 PSI
Compression parallel to the grain	1,000 PSI
Compression perpendicular to the grain	565 PSI
Modulus of Elasticity Shear Stress	1,500,000 PSI

   Installation Tolerance; walls - a maximum out-of-plumb limit of 1/4" in 10' vertically and horizontal in-plane misalignment of 1/8" from adjacent framing shall be achieved. Plates and floors shall be installed within a 1/4" maximum tolerance for straightness relative to the intended location.
2. Manufactured joists and trusses (if shown on drawings) must be designed and certified by a licensed engineer and submitted to the Architect and local building department for approval.
3. Roof rafters and/or trusses shall be connected at each bearing point with one prefab-90 PSI galvanized rafter tie (hurricane clip) by Simpson or approved equal. Similarly, floor joists and trusses shall be connected with one prefabricated joist hanger. Each anchor shall be 18 GA minimum thick.
4. Provide double joists under all parallel partitions, at joists that support headers, and at headers that support joists. Use joist hangers where applicable.
5. All joists and rafters shall be rigidly braced at intervals not exceeding 8'-0".
6. Double studs at header bearing, double joists and rafters at all openings according to schedule below (unless noted otherwise on drawings):
   Double 2 x 4 Up to 3'-0"
   Double 2 x 6 Up to 4'-0"
   Double 2 x 8 Up to 5'-0"
   Double 2 x 10 Up to 7'-0"
   Double 2 x 12 Up to 8'-0"
   All double headers and joists shall be joined with a minimum of two rows of 16 d nails 12" on center.
7. Provide blocking, banding, crush blocks, stiffeners, or rim joists, as required, at joist ends.
8. Floor joists shall have a minimum bearing of 2" on framed walls. All beams shall have minimum bearing of 4" bearing on all supports. Provide moisture protection to end of beams pocketed into masonry walls.
9. Wood joists, studs, and beams shall not be cut or notched unless authorized by the Architect. Drilled holes shall be centered at mid-depth of the member and the hole diameter shall not exceed $\frac{1}{3}$ the actual depth of the member. No holes shall be drilled within 2' from the ends or within the middle $\frac{1}{3}$ of the span. Provide 4" clear between holes.
10. Existing conditions shall be verified by the Contractor. Any existing damaged wood members shall be identified and replaced by the Contractor.
11. Contractor shall be responsible for providing necessary bracing and shoring of existing members and walls while altering the structure.
12. Provide 2x4 intermediate blocking at all bearing and non-bearing partitions.
13. All plywood shall be APA span rated. Use exterior grade plywood wherever edge of face will be exposed to weather. Interior plywood exposed to weather during construction shall be Exposure I min.
    A. Exterior wall sheathing shall be $\frac{1}{2}$" plywood unless noted otherwise.
    B. Subflooring shall be $\frac{3}{4}$" tongue and groove plywood, glued and screwed to the floor joists as per APA recommendations.
    C. Where spacing of roof structure members is 16" O.C., roof sheathing shall be $\frac{1}{2}$" plywood ($\frac{3}{4}$" where roofing is slate or tile). Where spacing of roof structure members is 24" O.C., roof sheathing shall be $\frac{5}{8}$" plywood ($\frac{3}{4}$" where roofing is slate or tile). Provide "H" clips at butt joints of roof sheathing.
14. MICRO-LAM L.V.L. (laminated veneer lumber) beams shall be manufactured by Trus Joist MacMillan or approved equal. Beams shall be installed according to manufacturer's recommendations. When fastening two or more beams together, provide a minimum of two rows of 16 d nails 12" on center.
15. TJI Floor Joists are to be manufactured by Trus Joist MacMillan or approved equal. Install per manufacturer's recommendations.
16. The following wood elements are to be pressure treated with preservative, bearing the AWPA standard use category label UC3B or UC4B (for ground contact):
    A. Sill plates resting on concrete or masonry walls.
    B. Sill plates resting on concrete slabs on grade.
    C. Joists which enter concrete or masonry walls and have less than $\frac{1}{2}$" clearance on tops, sides, and ends.
    D. Sleepers resting directly on concrete slabs.
    E. Exterior porch and deck framing, decking, and stairs.
17. Fasteners, hangers, and metal accessories used in pressure treated wood construction shall be type 304 or 316 stainless steel. Treated lumber shall not be placed in contact with aluminum flashing or other aluminum components.
18. Exterior Wood Trim:
    A. All exterior wood trim shall be clear pine or redwood.
    B. All trim shall be primed on 6 sides (including cut ends) prior to installation.
    C. All outside corners shall be mitered and no end grain shall be exposed to view. No butt joints will be accepted
19. Exterior Synthetic Trim shall be "AZEK," with traditional smooth surface. Fasteners, joint cement, and installation procedures shall be in accordance with manufacturer's recommendations.
20. Siding: Refer to drawings for type specified.
    A. Cement board shall be non-asbestos fiber-cement material complying with ASTM Standard Specification C1186 Grade II, Type A. Materials shall be equal to those manufactured by James Hardie Building Products.
    B. Wood siding and sidewall Shingles shall be kiln dried Western Red Cedar, "Clear V.G. Heart" grade for clear and transparent stain finishes, and "A Clear" grade for semi-transparent stain or opaque finishes. Semi-transparent stain or opaque finish shall be applied in strict accordance to manufacturer's recommendations; including, but not limited to, substrate preparation and primer/sealer application to all wood surfaces (6-sides). Fasteners shall generally be type 304 stainless steel, but shall be type 316 for coastal applications. Install wood siding and shingle products over "Cedar Breather" by Benjamin Obdyke Inc. and 30# felts in accordance with manufacturer's instructions. Siding installation and finishing shall be as recommended by the Western Red Cedar Lumber Association. Siding shall be sealed prior to installation, fasteners shall be concealed where possible or arranged in a uniform pattern.
21. Coordinate all floor and wall framing with ductwork. Refer to mechanical notes.
22. Folding Attic Access Ladder shall be 22 $\frac{1}{2}$" x 44" with self-trimming flange, pre-finished door panel, and gas-piston counterbalance. The door panel shall have continuous integral weatherstripping, R-10 insulation, and two key operated locking pins to draw the door tight. Ladder steps shall be pine, doweled to pine stringers. Contact Resource Conservation Technology at 410-366-1146. Additional insulation hood shall be provided to meet required insulation value per IECC R402.2.4.

DOORS AND WINDOWS

1. AWI "Custom Standard" shall apply to the workmanship, installation and finishing of wood doors and windows components.
2. The tops, bottoms, and edges of all doors shall be finished.
3. Any defects that prevent the door or window from serving its intented purpose satisfactorily shall be rejected, such as material that is crooked, warped, bowed, chatter marked, plane or tool marked, chipped, or otherwise defective.
4. Doors and windows shall be adjusted to provide proper operation of opening.

RADON DETECTION AND TREATMENT

1. The Contractor shall provide a venting system consisting of a minimum of 3" diameter ABS, PVC or equivalent gas-tight plumbing pipe inserted into the sub-slab gravel base (at all new concrete slabs). A 'T' fitting or equivalent method shall be used to ensure that the pipe opening remains with the sub-slab permeable material. The pipe shall terminate at least 12" above the high side of the roof penetration. Contractor shall coordinate location of pipe with Architect prior to installing the pipe.
2. Install, per IRC, 2018 edition, Appendix F 'Radon Control Methods.'
3. The Contractor shall provide any other measures as required by local codes.

VENTILATION

1. Where attics are indicated to be ventilated, they are to be vented in one of the following ways (refer to drawings for specifics):
   A. Continuous ridge venting and continuous soffit venting. Ridge vent shall be by Cor-A-Vent or approved equal. Continuous screen soffit vents shall be a minimum of 2" wide. Circular louver vents between each rafter may be used at the soffit if shown on the drawings.
   B. Screen louvers or vents with an open area equal to one square foot for every 300 square feet of attic space.
2. Provide foundation vents for all crawl spaces. Refer to drawings for locations.
3. Venting for appliances and exhaust fans:
   A. Provide venting to the exterior as per manufacturer's recommendations for all appliances. Location of ductwork and vent on exterior shall be approved by Architect prior to installation.
   B. Provide exhaust fans for bathrooms, etc., as shown on drawings. Location of ductwork and vent on exterior shall be approved by Architect prior to installation. Ducts within unconditioned spaces shall be insulated to prevent condensation.
4. Provide Whole-House ventilation system to comply with IECC R403.4

MOISTURE PROTECTION

1. Appropriate sealants shall be selected for each substrate depending upon location (interior or exterior), humidity, moisture conditions, and traffic conditions. Use primers as required.
2. Color of caulking shall be coordinated with adjacent materials and must be approved by Architect prior to application.
3. Joint fillers shall be used:
   A. To control the depth of sealants in joints.
   B. To meet the requirements for resilient separations in horizontal joints in floor, pavements, patios, sidewalks, and other light traffic areas.
4. Bond breakers shall be used to prevent adhesion to more than two surfaces.
5. Masonry foundations shall be parged to a thickness of $\frac{3}{4}$" minimum.
6. Waterproof all below grade foundation walls with a polymer-modified asphalt emulsion similar to TREMCO "TUFF-N-DRI Classic". Dry/ cured membrane thickness shall be minimum 40 mil. Installation and substrate preparation shall be per manufacturer's recommendations. Install subsurface drainage composite similar to CETCO "Aquadrain 10X" over the cured membrane with asphalt emulsion adhesive similar to Henry 111 Insulbond.
7. Footing drains shall be min. 4" in diameter and installed on the exterior of all foundations.
8. All flashing shall be installed according to the building code. An eave flashing strip of 40 mil. self-adhering rubberized asphalt sheet membrane shall be applied to extend from the edge of the roof to a point 24" min. inside the interior wall line of the structure, and at all valleys.
9. All membrane roofing to be approved by Architect prior to installation.
10. All roof shingles to be approved by Architect prior to installation.
11. Asphalt shingle roofs with slopes from 2 in 12 to 4 in 12 shall have two layers of #15 roofing felt applied in accordance with with the International Residential Code.
12. Flashing"
    A. Through-wall and other concealed flashing shall be a composite of fiberglass fabric, 5 oz. copper and asphalt, equal to York Copper Fabric.
    B. Exposed flashing shall be 16 oz. copper.
13. Painted aluminum drip strips shall be installed at the eave and rake edges of the roof sheathing for shingle roofs, and above window and door trim where indicated.
14. Exterior Insulation and Finish Systems (EIFS) shall be equal to Dryvit, Residential MD System, with Dryvit drainage mat installed between the secondary weather barrier and the insulation board.
15. Cedar roof shingles shall be No. 1, Blue Label, red cedar. Install over "Cedar Breather" by Benjamin Obdyke Inc. and 30# felts in accordance with manufacturer's instructions.
16. Standing seam roofing shall be 16 ounce copper with water-tight standing seams. For slopes greater than 3 in 12 provide #30 roofing felt underlayment on solid sheathing. For slopes 3 in 12 or less provide self-adhering 40 mil ice and water guard membrane over the entire area to receive standing seam roofing.

FINISHES

Gypsum Wallboard:

1. Gypsum wallboard shall be ASTM C-36 as follows:
   A. Regular ($\frac{1}{2}$"): except where noted.
   B. Water resistant ($\frac{1}{2}$"): at bathroom ceilings and walls that are not tiled.
   C. Durock interior tile backer board ($\frac{1}{2}$"): at all surfaces that have tile.
2. Gypsum boards shall have tapered edges to accommodate joint reinforcement.
3. Provide edge corner beads, trim, taping, and joint compounds as required for the proper completion of the job. Materials shall be by U.S. Gypsum or approved equal.
4. Finishing requirements:
   A. For typical walls and ceilings provide a Level 4 Finish as defined by the Gypsum Association.
   B. For surfaces noted to receive semi-gloss or gloss paint provide a Level 5 Finish as defined by the Gypsum Association.

Hardwood Flooring:

1. Unless noted otherwise, provide wood strip flooring where shown on the drawings.
2. Wood strip flooring to be oak. Where abutting existing floor, new floor shall match existing in size and grain. Elsewhere, oak shall be "clear" grade, in accordance with the national Oak Flooring Manufacturer's Association.
3. Install flooring in strict accordance with the recommendation of the National Oak Flooring Manufacturer's Association.
4. After the floors have been sanded, the flooring contractor shall apply a minimum of four stain and urethane samples in two foot by two foot areas on the floor for the owner to review. The owner shall have a minimum of two days to make a selection.

Ceramic Tile:

1. Provide ceramic tile and accessories in accordance with the Tile Council of American Specifications 137.1, in colors and patterns to be specified by the owner.
2. Setting materials: comply with pertinent recommendations contained in the Tile Council of America "Handbook for Ceramic Tile Installation."
3. Installation: comply with ANSI A108.1, ANSI A108.2, and the "Handbook for Ceramic Tile Installation" of the Tile Council of America.
   A. Extend tile into recesses and under equipment and fixtures to form a complete covering without interruptions.
   B. Terminate tile neatly at obstruction, edges, and corners, without disruption of pattern or joint alignment.
   C. Align joints when adjoining tiles on floor, base, trim, and walls are the same size.
   D. Layout tile work and center the tile fields in both directions in each space or on each wall area.
4. Replacement reserve: Contractor shall furnish to the Owner one unopened box of additional tiles for future repairs and maintenance work.

Carpet:

1. Provide carpeting as indicated on the drawings. Refer to allowances on schedule sheet.

Vinyl Tile:

1. Installation of all vinyl composition tile (VCT) shall be done in a manner which conforms with:
   ASTM E 648,
   ASTM E 84, AND
   ASTM E 662.
2. Replacement reserve: Contractor shall furnish Owner with one unopened box of additional tile for future repairs and maintenance.

Paint:

1. All paint and primers to be Benjamin Moore or approved equal. Refer to schedule for colors and types.
2. All surfaces to be painted shall receive one primer coat and two finish coats.
3. All paint shall be applied according to manufacturer's recommendations.

Architectural Woodwork and Trim:

1. All millwork trim and molding shall be installed accordingly to the quality of standards of the Architectural Woodwork Institute (AWI).
2. All interior trim and millwork shall conform to AWI "custom standards."
3. Flat trim shall be clear pine or approved equal.
4. All corners of trim and siding are to be mitered, except inside corners of interior running trim which shall be coped. Exposed end grains will not be accepted.
5. All millwork and trim shall be installed by craftsmen with experience in work of this type. All work shall be first class in every regard and consistent with the best practices of the trade.

FIRE AND LIFE SAFETY

1. Stairs:
   A. 7$\frac{3}{4}$" max rise
   B. 10" min tread
   C. 6'-8" min head room
   D. Height of handrails shall be continuous, 34" (min) to 38" (max) above finished stair treads. Handrails required at stairs with 3 or more risers.
   E. Guardrails shall be 36" (min) to 42" (max) above finished floor.
2. Provide a clear window opening of 5.7 square feet with no less than 20" clear wide and 24" clear high for sleeping area. The sill of this windows shall be no more than 44" above the finished floor.
3. Provide safety glass in all exterior doors, storm doors, sliding glass doors, shower doors, and tub enclosures above and adjacent to spas and tubs and where the glass is closer than 18" to the floor and exceeds 9 square feet in area.
4. Ground metal siding.
5. Smoke detectors shall be provided on every floor, in each bedroom and in each hall outside of bedrooms, and integrated with the electrical system with battery backup.
6. If a fuel-burning appliance, fireplace, or attached garage is present, an interconnected battery back up carbon monoxide alarm or detector must be installed outside all sleeping areas and on all floors. If fuel-buring appliance or fireplace is present in any sleeping area, an interconnected carbon monoxide alarm or detector must also be installed in that room as required per local jurisdiction.
7. Flues shall be class B except solid fuel flues, which shall be class A.
8. Top of flue shall be 2'-0" above any part of structure within 10'-0" of flue.
9. Interior finish of walls and ceiling shall have a flame spread rating not greater than Class III.
10. Carpeting shall meet federal regulation DOC FF-1.
11. Prefab fireplaces shall be (U.L.) rated and installed according to manufacturer's specifications.
12. Provide outside air for combustion in all prefab and masonry fireplaces.

ELECTRICAL AND LIGHTING NOTES

1. Electrical contractor shall size and arrange all circuits in accordance with the National Electric Code as well as all local codes. Service to be upgraded as required.
2. Wall outlets are to be mounted 1'-6" above finished floor unless noted otherwise.
3. Switches are to be mounted 4'-0" above finished floor unless noted otherwise.
4. Mounting heights are to the vertical center of the equipment to the finished elevation of the floor.
5. All new switch and outlet styles are to be approved by Owner prior to installation.
6. Provide hardwired smoke detectors on all floors, located as per Montgomery County Code.
7. Electrician shall locate all fixtures, switches, outlets, etc. prior to running wiring. Owner, Architect, and Electrician to meet at a mutually agreed upon time to review locations. The purpose of which is to allow for possible relocation prior to wiring.
8. Owner is allowed to add an additional ten (10) items (switches, cable, phone, outlet, etc., or any combination) at no additional charge to the owner.
9. Contractor shall determine, based on an on-site review of existing and proposed electrical systems, whether an electrical service heavy-up will be required, and shall include the costs of all required upgrades in their Contract Amount.
10. Provide door bell, transformer, and chime for front door and where indicated. In lieu of Owner's selection otherwise, price shall be based on the following: Illuminated Button - Destination Lighting product number 15921; Transformer - 16V; Chimes - Teiber Model CTSB-or STPW-, in Owner's choice of finish. Verify all selections and mounting locations with Owner prior to purchasing.
11. Per IECC R404.1 90% of installed lighting fixtures must contain high efficacy lamps.

MECHANICAL NOTES

1. All work shall be done in accordance with the International Residential Code (IRC), 2018 Edition, as well as IECC 2018 and other local codes including a compliant Manual J load calculation/ design in accordance with ACCA recommendations.
2. Unless otherwise indicated in Contract Documents, Contractor shall be delegated to design a fully functional and performing mechanical system in accordance with applicable mechanical codes and standards. Contractor shall submit all duct layouts and air handler locations (and thermostat locations) to the Owner and the Architect for approval prior to the commencement of framing. No extras will be given for any modification required to the framing due to ductwork.
3. All exterior unit locations to be coordinated with Owner and Architect.
4. Air conditioners shall be Energy Star rated and shall have a minimum 13 SEER rating with two zones each. Gas furnaces shall have a minimum Annual Fuel Utilization Efficiency rating of 90%.
5. Equipment will be Carrier or approved equal.
6. Ductwork will be galvanized sheet metal and flex.
7. Registers and return grilles are Hart & Cooley or equal.

PLUMBING NOTES

1. All work shall be done in accordance with the International Residential Code (IRC), 2018 Edition, as well as IECC 2018 and other local codes.
2. Contractor shall provide riser diagrams as required for permit, and shall submit to the Architect proposed locations of all waste and supply lines prior to the commencement of framing. No extras will be given for any modification required to the framing due to plumbing lines. Provide cast iron at vertical waste lines.
3. Unless otherwise indicated in Contract Documents. Contractor shall be delegated to design a fully functional and performing water supply and waste system in accordance with applicable plumbing codes and standards. Install water heater and reserve tank per requirements of the house with recirculate system.
4. Provide drain pans under all water heaters and washing machines, and pipe the pan to the sanitary drain upstream of a trap.
5. Contractor shall make a count of existing and proposed fixtures to determine whether a water or sewer upgrade will be required, and shall include the costs of all required upgrades in his Contract Amount. The count of existing fixtures shall be based on an on-site inspection.
6. Provide cast iron at vertical waste lines.
7. Locate plumbing clean out plugs in bottom $\frac{1}{3}$" of wall, typical.

STEAM SHOWER

1. Wall construction: Provide ceramic tile over dryset or latex Portland cement mortar bond coat over tile backer board over Dow insulation board over 2x4 studs.
2. Ceiling construction: Same as walls, provide continuous sloped ceiling ($\frac{1}{2}$" per foot), and provide rounded inside corner tile at joint between wall and ceiling.
3. Insulate all walls, ceiling, and floor adjacent to steam shower.
4. Steam shower to be watertight, including a watertight shower door.
5. Steam Unit: "Mr. Steam model #MS-150, 6kw or approved equal. Provide the following connections: water inlet $\frac{3}{8}$" NPT, steam outlet NPT, drain $\frac{3}{8}$" NPT. Follow all manufacturer's specifications.

ROOFTOP-MOUNTED PHOTOVOLTAIC SYSTEMS

1. Structural support for all rooftop-mounted photovoltaic systems and other considerations shall comply with 2018 IRC Section R324.4

STATIONARY STORAGE BATTERY SYSTEMS

1. The installation of battery storage systems shall comply with 2018 IRC Section R327

FILE NAME:

GTM ARCHITECTS

7735 OLD GEORGETOWN ROAD
SUITE 700
BETHESDA, MD 20814
(240)333-2000
(240)333-2001 FAX
WWW.GTMARCHITECTS.COM

GTM

Seal

I certify that these documents were prepared or approved by me, and that I am a duly licensed architect under the laws of the State of Maryland, license number 8385, Expiration Date: 12-06-2022.

Consultant

Project

25 High Street LOT 1

25 HIGH STREET, BROOKEVILLE, MD 20833

Owner

Developer

Issue Description	Date
PERMIT SET	4-11-2022

GTM Project No.	18.0320
Checked By	GTM
Drawn By	NW/KF
Scale	AS NOTED

Sheet Title

SPECIFICATIONS

Sheet No.

002

COPYRIGHT, 2019 GTM ARCHITECTS, INC.

DOOR SCHEDULE

DOOR				FRAME					HARDWARE	REMARKS
NO.	SIZE	MATERIAL	MANUF.	MAT:	FIN:	HEAD	JAMB	SILL		
BASEMENT										
1	$2^{\underline{6}} \times 6^{\underline{8}}$	SOLID CORE MASONITE	T.B.D						H-3	
2	$2^{\underline{4}} \times 6^{\underline{8}}$	SOLID CORE MASONITE	T.B.D						H-4	
3	$2^{\underline{4}} \times 6^{\underline{8}}$	SOLID CORE MASONITE	T.B.D.						H-3	
4	$2^{\underline{6}} \times 6^{\underline{8}}$	SOLID CORE MASONITE	T.B.D						H-4	
5	$3^{\underline{0}} \times 6^{\underline{8}}$	SOLID CORE MASONITE	T.B.D.						H-4	
6	$2^{\underline{6}} \times 6^{\underline{8}}$	SOLID CORE MASONITE	T.B.D.						H-4	
FIRST FLOOR										
7	$3^{\underline{0}} \times 8^{\underline{0}}$	WOOD & GLASS	T.B.D						H-2	PAINT GRADE W/ 18" TEMPERED SIDELIGHTS
8	$2^{\underline{4}} \times 8^{\underline{0}}$	SOLID CORE MASONITE	T.B.D.						H-3	
9	$2^{\underline{0}} \times 8^{\underline{0}}$ 1 PAIR	SOLID CORE MASONITE	T.B.D.						H-5	
9A	$2^{\underline{6}} \times 8^{\underline{0}}$	SOLID CORE MASONITE	T.B.D.						H-4	
10	$3^{\underline{0}} \times 8^{\underline{0}}$ 1 PAIR	WOOD & GLASS	JELDWEN						H-2	TEMPERED, WEATHERSTRIPPED FRENCH DOORS
11	$2^{\underline{8}} \times 8^{\underline{0}}$	SOLID CORE MASONITE	T.B.D						H-4	
12	$2^{\underline{0}} \times 8^{\underline{0}}$ 1 PAIR	SOLID CORE MASONITE	T.B.D.						H-5	
13	$2^{\underline{8}} \times 8^{\underline{0}}$	WOOD & GLASS	T.B.D						H-2	TEMPERED, WEATHERSTRIPPED FRENCH DOOR
SECOND FLOOR										
14	$2^{\underline{6}} \times 7^{\underline{0}}$	SOLID CORE MASONITE	T.B.D.						H-3	
15	$2^{\underline{4}} \times 7^{\underline{0}}$	SOLID CORE MASONITE	T.B.D.						H-4	
15A	$2^{\underline{6}} \times 7^{\underline{0}}$ 1 PAIR	SOLID CORE MASONITE	T.B.D.						H-5	
16	$2^{\underline{6}} \times 7^{\underline{0}}$	SOLID CORE MASONITE	T.B.D.						H-3	
17	$2^{\underline{4}} \times 7^{\underline{0}}$ 1 PAIR	SOLID CORE MASONITE	T.B.D.						H-5	
18	$2^{\underline{4}} \times 7^{\underline{0}}$	GLASS	T.B.D						H-3	
19	$2^{\underline{4}} \times 7^{\underline{0}}$ 1 PAIR	SOLID CORE MASONITE	T.B.D.						H-5	
20	$2^{\underline{6}} \times 7^{\underline{0}}$	SOLID CORE MASONITE	T.B.D.						H-3	
21	$2^{\underline{4}} \times 7^{\underline{0}}$	SOLID CORE MASONITE	T.B.D.						H-3	
22	$2^{\underline{4}} \times 7^{\underline{0}}$	SOLID CORE MASONITE	T.B.D						H-6	POCKET DOOR
23	$1^{\underline{4}} \times 7^{\underline{0}}$	SOLID CORE MASONITE	T.B.D.						H-4	
24	$2^{\underline{4}} \times 7^{\underline{0}}$	SOLID CORE MASONITE	T.B.D						-	TEMPERED SHOWER DOOR
25	$2^{\underline{4}} \times 7^{\underline{0}}$	SOLID CORE MASONITE	T.B.D.						H-3	
26	$2^{\underline{6}} \times 7^{\underline{0}}$	SOLID CORE MASONITE	T.B.D.						H-6	POCKET DOOR
27	$2^{\underline{4}} \times 7^{\underline{0}}$	SOLID CORE MASONITE	T.B.D						H-4	
28	$2^{\underline{4}} \times 7^{\underline{0}}$	SOLID CORE MASONITE	T.B.D.						H-4	
29	$2^{\underline{6}} \times 7^{\underline{0}}$	SOLID CORE MASONITE	T.B.D.						H-3	
30	$2^{\underline{0}} \times 7^{\underline{0}}$ 1 PAIR	SOLID CORE MASONITE	T.B.D.						H-5	
DETACHED GARAGE										
31	$3^{\underline{0}} \times 7^{\underline{0}}$	WOOD/GLASS	T.B.D						H-3	PAINT GRADE
32	$8^{\underline{0}} \times 7^{\underline{6}}$	WOOD/GLASS	T.B.D						-	
33	$8^{\underline{0}} \times 7^{\underline{6}}$	WOOD/GLASS	T.B.D						-	

HARDWARE SCHEDULE

NOTE: ALL HARDWARE TO BE BY SCHLAGE OR APPROVED EQUAL. (EXCEPT FRENCH DOORS, WHICH ARE TO HAVE STANDARD HARDWARE BY DOOR MANUF.)

H-1	DOUBLE CYLINDER ENTRANCE LOCK, DEADBOLT
H-2	MULTI-POINT LEVER SET BY WINDOW/DOOR MANUF.
H-3	BATH/BEDROOM PRIVACY LOCK
H-4	PASSAGE SET
H-5	BALL CATCHES $ DUMMY KNOBS
H-6	POCKET DOOR HARDWARE
H-7	FRENCH DOOR PRIVACY LOCK-FLUSH BOLT/DUMMY HANDSET COMBO

GENERAL DOOR NOTES:

1. CONFIRM HARDWARE SELECTION WITH OWNER PRIOR TO ORDERING.
2. INTERIOR DOORS TO BE SOLID CORE.
3. DOORS W/ SIDELITES SHALL HAVE 2-2x6 SPACERS BETWEEN UNLESS SHOWN OTHERWISE
4. PROVIDE SAFETY GLASS AT ALL EXTERIOR FRENCH DOORS, PER CODE
5. PROVIDE CHARCOAL SCREENING @ SCREEN DOORS
6. CONNECT GARAGE DOOR TO ALARM SYSTEM PER OWNER

GENERAL NOTES

1. ALL WINDOWS TO HAVE SCREENS (SCREEN FRAMES COLOR T.B.S.).
2. ALL WINDOWS TO BE ALUMINUM CLAD EXTERIOR, PRE-PRIMED INTERIOR.
3. CONFIRM HARDWARE FINISH W/ ARCHITECT & OWNER PRIOR TO ORDER.
4. ALL GLAZING TO BE DOUBLE PANED, LOW E, CLEAR INSULATED.
5. CONFIRM OVERALL WINDOW SCHEDULE W/ ARCHITECT PRIOR TO ORDER.
6. ALL WINDOWS & GLASS DOORS TO BE SIMULATED DIVIDED LITE, 7/8" MUNTIN.. SEE ELEVATIONS FOR MUNTIN CONFIGURATIONS
7. PROVIDE WHITE JAMB LINERS.
8. ALL EXTERIOR TRIM FOR FRAME WALL UNITS TO BE AZEK PROVIDED & INSTALLED BY G.C.
9. GANGED WINDOWS SHALL 3-2x4 SPACERS BETWEEN UNLESS SHOWN OTHERWISE
10. PROVIDE EGRESS HARDWARE IN EGRESS WINDOWS AS REQUIRED.
11. SEE ELEVATIONS FOR TYPICAL HEAD HEIGHTS ABOVE FINISHED SUBFLOOR
12. PROVIDE SAFETY GLASS AT ENTRIES, STAIRS, OVER BATHTUBS & ELSEWHERE AS REQUIRED BY CODE.

WINDOW SCHEDULE (BASEMENT)

#	TYPE	MANUFACTURER	CAT. NO.	ROUGH OPNG.	GLASS	REMARKS	
001	DOUBLE HUNG	JELDWEN SITELINE	SCD3564	36 1/8" x 64 3/4"	INSULATED	SEE ELEVS. FOR GRILLE PATTERN	EGRESS UNIT

WINDOW SCHEDULE (FIRST FLOOR)

#	TYPE	MANUFACTURER	CAT. NO.	ROUGH OPNG.	GLASS	REMARKS	
100	DOUBLE HUNG	JELDWEN SITELINE	SCD3564	36 1/8" x 64 3/4"	INSULATED	SEE ELEVS. FOR GRILLE PATTERN	
101	DOUBLE HUNG	JELDWEN SITELINE	SCD3564	36 1/8" x 64 3/4"	INSULATED	SEE ELEVS. FOR GRILLE PATTERN	
102	DOUBLE HUNG	JELDWEN SITELINE	SCD3564	36 1/8" x 64 3/4"	INSULATED	SEE ELEVS. FOR GRILLE PATTERN	
103	DOUBLE HUNG	JELDWEN SITELINE	SCD3564	36 1/8" x 64 3/4"	INSULATED	SEE ELEVS. FOR GRILLE PATTERN	
104	DOUBLE HUNG	JELDWEN SITELINE	SCD3564	36 1/8" x 64 3/4"	INSULATED	SEE ELEVS. FOR GRILLE PATTERN	
105	DOUBLE HUNG	JELDWEN SITELINE	SCD3564	36 1/8" x 64 3/4"	INSULATED	SEE ELEVS. FOR GRILLE PATTERN	
106	DOUBLE HUNG	JELDWEN SITELINE	SCD3564	36 1/8" x 64 3/4"	INSULATED	SEE ELEVS. FOR GRILLE PATTERN	
107	DOUBLE HUNG	JELDWEN SITELINE	SCD3364	34 1/8" x 68 3/4"	INSULATED	SEE ELEVS. FOR GRILLE PATTERN	
108	DOUBLE HUNG	JELDWEN SITELINE	SCD3364	34 1/8" x 68 3/4"	INSULATED	SEE ELEVS. FOR GRILLE PATTERN	
109	CASEMENT	JELDWEN SITELINE	SCC3630	36 3/4" x 30 3/4"	INSULATED	SEE ELEVS. FOR GRILLE PATTERN	
110	CASEMENT	JELDWEN SITELINE	SCC3630	36 3/4" x 30 3/4"	INSULATED	SEE ELEVS. FOR GRILLE PATTERN	
111	DOUBLE HUNG	JELDWEN SITELINE	SCD3364	34 1/8" x 64 3/4"	INSULATED	SEE ELEVS. FOR GRILLE PATTERN	
112	DOUBLE HUNG	JELDWEN SITELINE	SCD3364	34 1/8" x 64 3/4"	INSULATED	SEE ELEVS. FOR GRILLE PATTERN	
113	DOUBLE HUNG	JELDWEN SITELINE	SCD3364	34 1/8" x 64 3/4"	INSULATED	SEE ELEVS. FOR GRILLE PATTERN	
114	CASEMENT	JELDWEN SITELINE	(3) SCC2042	60 3/4" x 42 3/4"	INSULATED	SEE ELEVS. FOR GRILLE PATTERN	
115	←	←	NOT USED	→	→	→	
116	←	←	NOT USED	→	→	→	
117	DOUBLE HUNG	JELDWEN SITELINE	SCC3630	36 1/8" x 64 3/4"	INSULATED	SEE ELEVS. FOR GRILLE PATTERN	
118	DOUBLE HUNG	JELDWEN SITELINE	SCC3630	36 1/8" x 64 3/4"	INSULATED	SEE ELEVS. FOR GRILLE PATTERN	

WINDOW SCHEDULE (SECOND FLOOR)

#	TYPE	MANUFACTURER	CAT. NO.	ROUGH OPNG.	GLASS	REMARKS	
200	CASEMENT	JELDWEN SITELINE	SCC3048	30 3/4" x 48 3/4"	INSULATED	SEE ELEVS. FOR GRILLE PATTERN	EGRESS UNIT
201	CASEMENT	JELDWEN SITELINE	SCC3048	30 3/4" x 48 3/4"	INSULATED	SEE ELEVS. FOR GRILLE PATTERN	EGRESS UNIT
202	CASEMENT	JELDWEN SITELINE	SCC3048	32 3/4" x 48 3/4"	INSULATED	SEE ELEVS. FOR GRILLE PATTERN	EGRESS UNIT
203	CASEMENT	JELDWEN SITELINE	SCC3048	32 3/4" x 48 3/4"	INSULATED	SEE ELEVS. FOR GRILLE PATTERN	EGRESS UNIT
204	CASEMENT	JELDWEN SITELINE	SCC3048	32 3/4" x 48 3/4"	INSULATED	SEE ELEVS. FOR GRILLE PATTERN	EGRESS UNIT
205	CASEMENT	JELDWEN SITELINE	SCC3630	36 3/4" x 30 3/4"	INSULATED	SEE ELEVS. FOR GRILLE PATTERN	
206	CASEMENT	JELDWEN SITELINE	SCC3054	30 3/4" x 54 3/4"	INSULATED	SEE ELEVS. FOR GRILLE PATTERN	
207	CASEMENT	JELDWEN SITELINE	SCC3054	30 3/4" x 54 3/4"	INSULATED	SEE ELEVS. FOR GRILLE PATTERN	
208	CASEMENT	JELDWEN SITELINE	SCC3054	30 3/4" x 54 3/4"	INSULATED	SEE ELEVS. FOR GRILLE PATTERN	TEMPERED UNIT
209	CASEMENT	JELDWEN SITELINE	SCC3054	30 3/4" x 54 3/4"	INSULATED	SEE ELEVS. FOR GRILLE PATTERN	TEMPERED UNIT
210	CASEMENT	JELDWEN SITELINE	SCC3054	30 3/4" x 54 3/4"	INSULATED	SEE ELEVS. FOR GRILLE PATTERN	EGRESS UNIT
211	CASEMENT	JELDWEN SITELINE	SCC3054	30 3/4" x 54 3/4"	INSULATED	SEE ELEVS. FOR GRILLE PATTERN	EGRESS UNIT
212	CASEMENT	JELDWEN SITELINE	SCC3054	30 3/4" x 54 3/4"	INSULATED	SEE ELEVS. FOR GRILLE PATTERN	TEMPERED UNIT
213	CASEMENT	JELDWEN SITELINE	SCC3654	36 3/4" x 54 3/4"	INSULATED	SEE ELEVS. FOR GRILLE PATTERN	EGRESS UNIT
214	CASEMENT	JELDWEN SITELINE	SCC3648	36 3/4" x 42 3/4"	INSULATED	SEE ELEVS. FOR GRILLE PATTERN	EGRESS UNIT

WINDOW SCHEDULE (DETACHED GARAGE)

#	TYPE	MANUFACTURER	CAT. NO.	ROUGH OPNG.	GLASS	REMARKS	
300	CASEMENT	JELDWEN SITELINE	SCC2424	24 3/4" x 24 3/4"	INSULATED	SEE ELEVS. FOR GRILLE PATTERN	
301	DOUBLE HUNG	JELDWEN SITELINE	SCC3654	36 3/4" x 54 3/4"	INSULATED	SEE ELEVS. FOR GRILLE PATTERN	
302	DOUBLE HUNG	JELDWEN SITELINE	SCC3654	36 3/4" x 54 3/4"	INSULATED	SEE ELEVS. FOR GRILLE PATTERN	
303	DOUBLE HUNG	JELDWEN SITELINE	SCC3654	36 3/4" x 54 3/4"	INSULATED	SEE ELEVS. FOR GRILLE PATTERN	
304	CASEMENT	JELDWEN SITELINE	SCC2424	24 3/4" x 24 3/4"	INSULATED	SEE ELEVS. FOR GRILLE PATTERN	
305	DOUBLE HUNG	JELDWEN SITELINE	SCC3654	36 3/4" x 54 3/4"	INSULATED	SEE ELEVS. FOR GRILLE PATTERN	

GTM ARCHITECTS

7735 OLD GEORGETOWN ROAD
SUITE 700
BETHESDA, MD 20814
(240)333-2000
(240)333-2001 FAX
WWW.GTMARCHITECTS.COM

Seal

I certify that these documents were prepared or approved by me, and that I am a duly licensed architect under the laws of the State of Maryland, license number 8385, Expiration Date: 12-06-2022.

Consultant

Project

25 High Street LOT 1

25 HIGH STREET, BROOKEVILLE, MD 20833

Owner

Developer

Issue Description	*Date*
PERMIT SET	4-11-2022

GTM Project No.	18.0320
Checked By	GTM
Drawn By	NW/KF
Scale	AS NOTED

Sheet Title

DOOR & WINDOW SCHEDULES

Sheet No. 003

COPYRIGHT, 2019 GTM ARCHITECTS, INC.

FILE NAME:

GENERAL NOTES

1. Boundary information and two-foot contour data within noted "Limits of Topographic Survey" are based upon surveys performed by CAS Engineering, dated July, 2018.
2. The location of offsite trees, improvements and other structures beyond noted "Limits of Topographic Survey" are approximate. Offsite features are shown per available MNCPPC topographic records and are provided for illustrative purposes only.
3. Total lot area: Lot 1 =15,000 sq. ft. (0.344 ac.)
4. Property is located on Tax Map HU562 and WSSC 200' Sheet 227NW03.
5. Property is located on Montgomery County soils survey map number 14. Soil type(s): 1B, 1C, 6A & 16D. [Gaila silt loam, Baile silt loam & Brinklow-Blocktown channery silt loams] Hydrologic Soil Group "B" "C" & "D".
6. Flood zone "X" per F.E.M.A. Firm Maps, Community Panel Number 24031C0216D.
7. Property is located in the Hawlings River - Reddy Branch Watershed.
8. Water Category - 3, Sewer Category - 3
9. Local utilities include:
   Water / Sewer - Washington Suburban Sanitary Commission
   Electric - PEPCO
   Telephone - Verizon
   Gas - Washington Gas
10. Parcel 770 is located in the Town of Brookeville and the Brookeville Historic District.
11. This plan was created without the benefit of a title report.

TOWN OF BROOKEVILLE ZONING DATA

1. Zoning: Historic Village Residential (HVR)

Minimum Lot Area = 10,000 sq. ft.	Front B.R.L. = 15 ft.
Minimum Lot Width at R/W = 25 ft.	Rear B.R.L. = 40 ft. / 2 ft. (Accessory Structures)
Minimum Lot Width at B.R.L. = N/A	Side B.R.L. = 8 ft. / 2 ft. (Accessory Structures)

2. Verify main building height in accordance with the Town of Brookeville Zoning Ordinance.

Height of building from FF to highest point:	24.88 ft (24'-10 1/2" Per Arch.)
First floor elevation	447.80 ft
Height of building to highest point	24.88 ft
Elevation @ highest point	472.68 ft
Average elevation along front of building	444.70 ft

Height of building at highest point = 472.68 - 444.70 = 27.98 feet
Allowable height of building = 35 feet

Proposed height of building to highest point = 27.98 feet

3. Verify accessory building height in accordance with the Town of Brookeville Zoning Ordinance.

Height of building from FF to highest point:	17.29 ft (17'-3 1/2" Per Arch.)
First floor elevation	444.50 ft
Height of accessory building to highest point	17.29 ft
Elevation @ highest point	461.79 ft
Average elevation along front of building	444.10 ft

Height of accessory building at highest point = 461.79 - 444.10 = 17.69 feet
Allowable height of accessory building = 35 feet

Proposed height of accessory building to highest point = 17.69 feet

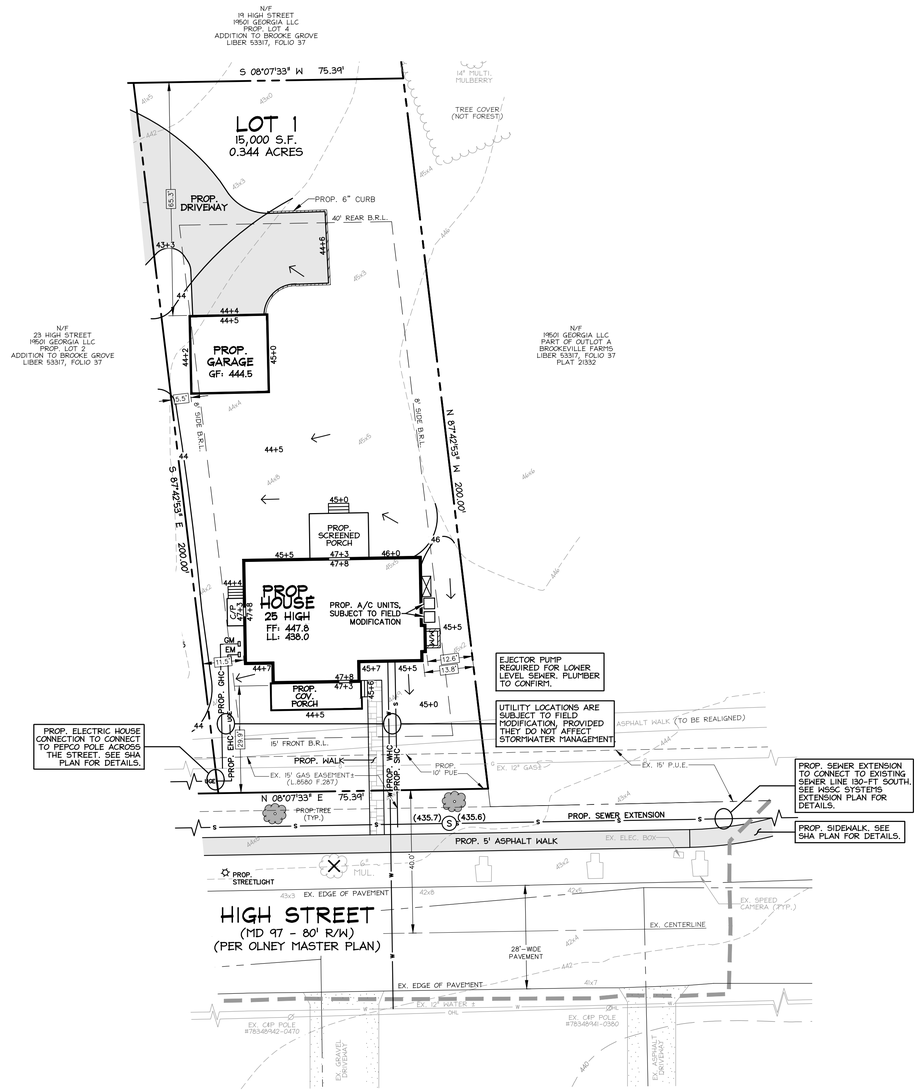

AVERAGE GRADE (ACCESSORY BUILDING)

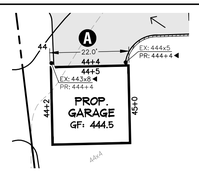

	ELEV @ POINT 1	ELEV @ POINT 2	AVERAGE GRADE	SECTION LENGTH	% LENGTH	AVERAGE GRADE x % LENGTH
Section A	443.80	444.40	444.10	22.1	100.00%	444.10

AVERAGE GRADE = 444.10

AVERAGE GRADE (MAIN BUILDING)

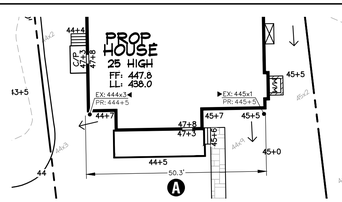

	ELEV @ POINT 1	ELEV @ POINT 2	AVERAGE GRADE	SECTION LENGTH	% LENGTH	AVERAGE GRADE x % LENGTH
Section A	444.30	445.10	344.70	50.3	100.00%	444.70

AVERAGE GRADE = 444.70

LEGEND

EXISTING FEATURES

- Ex. Sewer Manhole and Invert
- Ex. Water Line with Valve
- Ex. Gas Line with Valve
- Ex. Overhead Utility with Pole
- Ex. Two- And Ten-foot Contours
- Ex. Spot Elevation
- Ex. Canopy Line
- Ex. Tree
- Ex. Specimen Tree (DBH ≥ 30")
- Ex. Significant Tree (DBH ≥ 24")
- Ex. Tree (To Be Removed)

PROPOSED FEATURES

- Prop. Water-House Connection
- Prop. Sewer-House Connection
- Prop. Gas-House Connection
- Prop. Electric-House Connection
- Prop. Contour with Elevation
- Prop. Spot Elevation
- Prop. Surface Flow Direction
- Prop. Tree
- Prop. Streetlight

UTILITY INFORMATION

EXISTING UNDERGROUND UTILITY LOCATIONS ARE APPROXIMATE AND MUST BE FIELD VERIFIED. UTILITY LOCATIONS ARE BASED UPON AVAILABLE RECORDS AND ARE SHOWN TO THE BEST OF OUR ABILITY.

FOR LOCATION OF UTILITIES, CALL "MISS UTILITY" AT 1-800-257-7777, OR LOG ON TO WWW.MISSUTILITY.NET/ITIC 48 HOURS IN ADVANCE OF ANY WORK IN THIS VICINITY. THE EXCAVATOR MUST NOTIFY ALL PUBLIC UTILITY COMPANIES WITH UNDER GROUND FACILITIES IN THE AREA OF PROPOSED EXCAVATION AND HAVE THOSE FACILITIES LOCATED BY THE UTILITY COMPANIES PRIOR TO COMMENCING EXCAVATION. THE EXCAVATOR IS RESPONSIBLE FOR COMPLIANCE WITH REQUIREMENTS OF CHAPTER 36A OF THE MONTGOMERY COUNTY CODE.

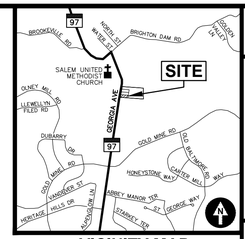

VICINITY MAP

ADC MAP 5050, GRID A-3, SCALE: 1" = 2000'

CAS JOB NO.: 16-579B
DATE: 03/2022

DATE	REVISION
03/31/22	SMF: Building Permit Site Plan to Arch for coordination.

Lot 1, Addition to Brooke Grove
Plat Pending
Olney (8th) Election District, Montgomery County, MD

25 High Street
Brookeville, Maryland 20833

CAS ENGINEERING-MD
10 South Bentz Street
Frederick, Maryland 21701
301-607-8031 Phone
info@casengineering.com
www.casengineering.com

CAS ENGINEERING-DC, LLC
4836 MacArthur Boulevard, NW, 2nd Floor
Washington, DC 20007
202-393-7200 Phone
info@cas-dc.com
www.cas-dc.com

0 10 20 30 40
SCALE: 1 INCH = 20 FEET

SHEET TITLE:

Building Permit Site Plan

1 OF 1

CLIENT
Phillip E. Sardelis
10776 Ticker Street
Beltsville, MD 20705
philsardelis@gmail.com

ARCHITECT
GTM Architects
Attn: Luke Olson
7735 Old Georgetown Road, Suite 700
Bethesda, MD 20814
(240) 333-2021 Phone
lolson@gtmarchitects.com

THIS PLAN IS FOR BUILDING PERMIT APPROVAL ONLY.
SEE THE SHA DISTRICT OFFICE PERMIT PLAN FOR ADDITIONAL DETAILS.
SEE THE APPROVED SEDIMENT CONTROL PLAN FOR REQUIRED SEDIMENT CONTROL AND STORMWATER MANAGEMENT MEASURES.

25 High Street
Lot 1
Addition to Brooke Grove
Building Permit Site Plan

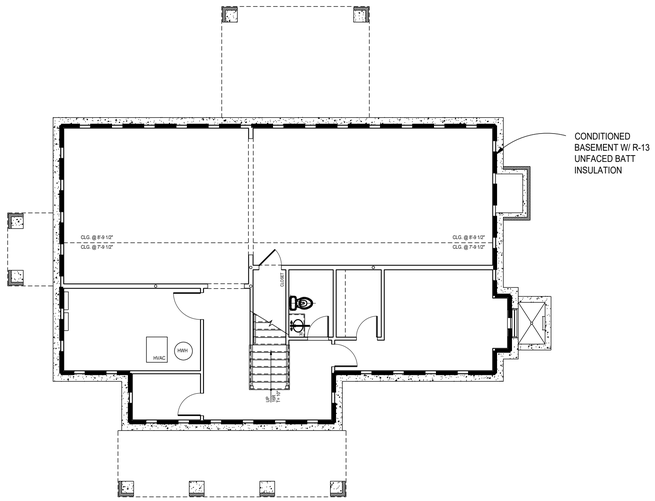

1 BASEMENT THERMAL ENVELOPE PLAN
SCALE: 1/8"=1'=0

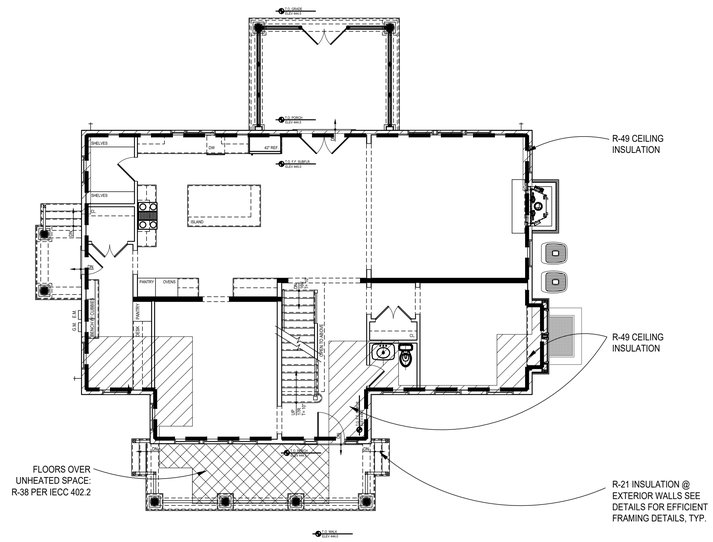

2 FIRST FLOOR THERMAL ENVELOPE PLAN
SCALE: 1/8"=1'=0

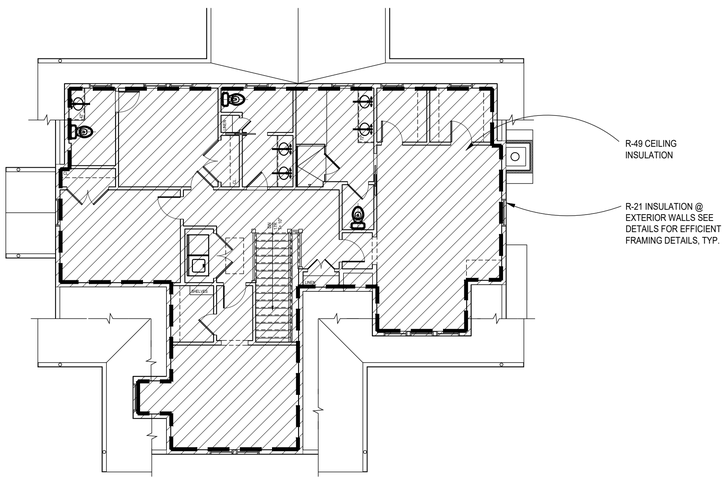

3 SECOND FLOOR THERMAL ENVELOPE PLAN
SCALE: 1/8"=1'=0

WINDOW/DOORS THERMAL DATA

THERMAL PERFORMACE DATA FOR DOORS & WINDOWS		
OPENING TYPE	U-VALUE	SHGC
CASEMENT WINDOWS	0.35	0.40
DOUBLE HUNG WINDOWS	0.35	0.40
FRENCH INSWINGING/ SLIDING DOORS	0.35	0.40
EXTERIOR SWINGING DOORS	0.35	0.40

THE AREA-WEIGHTED AVERAGE MAXIMUM FENESTRATION U-FACTOR PERMITTED USING TRADE-OFFS FROM SECTION 402.1 IN ZONE 4 SHALL BE .35 FOR VERTICAL FENESTRATION AND .55 FOR SKYLITES

ENERGY CONSERVATION NOTES

1. The following provisions for thermal resistance meet or exceed the requirements stipulated by the International Energy Conservation Code.
2. INSULATION: IRC

CEILING (OF UPPERMOST STORY)	R-49 W/ 500SF R-30 ALLOWANCE, OR R-38 CONTINUOUS
VAULTED CEILING	R-38
EXTERIOR FRAME WALLS	R-20 OR 13+5 (EXTERIOR)
RIM JOISTS	EQUAL TO WALL BELOW
FLOORS OVER UNHEATED SPACES (INCLUDING FLOOR OVERHANGS)	R-38
MASONRY WALLS (ENCLOSED HEATED LIVING AREAS)	R-13 OR R-10 CONTINUOUS
SLAB ON GRADE (HEATED SPACE) 24" PERIMETER INSULATION	R-10
WINDOWS	0.32 U FACTOR, 0.40 SHGC
DOORS	SEE SECTION R402.3.4

*ALL VALUES ARE TYPICAL UNLESS NOTED OTHERWISE IN ARCHITECTURAL DRAWINGS

3. Air Infiltration:
A. Windows: not exceeding five tenths (0.5) CFM of sash crack.
B. Sliding Glass Doors: not exceeding five tenths (0.5) CFM per foot of door area.
C. Swinging Doors: not exceeding one and twenty-five hundredths (1.25) CFM per square foot of door area. Provide 1" fiberglass sill sealer between foundation wall and all sill plates.
D. In order to seal between dissimilar materials to allow for differential expansion and contraction, the following shall be caulked, gasketed, weatherstripped or otherwise sealed with an air barrier material, suitable film or solid material:

1. All joints, seams, and penetrations
2. Site-built windows, doors, and skylites
3. Openings between window and door assemblies and their respective jambs & framing
4. Utility penetrations
5. Dropped ceilings or chases adjacent to the thermal envelope
6. Knee walls
7. Walls and ceilings separating a garage from conditioned spaces
8. Behind tubs and showers on exterior walls
9. Common walls between dwelling units
10. Attic access openings
11. Rim joist junction
12. Other sources of infiltration

HVAC SYSTEMS & WATER HEATING

1. HEATING & COOLING EQUIP. CONTROLS. AT LEAST ONE PRE-PROGRAMMED PROGRAMMABLE THERMOSTAT IS REQUIRED WHEN USING A FORCED AIR SYSTEM. SEPARATE THERMOSTATS ARE REQUIRED FOR EACH HEATING/COOLING ZONE IN THE DWELLING.

2. DUCT INSULATION. SUPPLY DUCTS LOCATED OUTSIDE THE BUILDING THERMAL ENVELOPE SHALL BE INSULATED TO MINIMUM R-8; ALL OTHER DUCTS INSULATED TO A MINIMUM OF R-6

3. DUCT SEALING. ALL DUCTS, AIR HANDLERS, FILTER BOXES, & BUILDING CAVITIES MUST BE SEALED. JOINTS & SEAMS SHALL COMPLY W/ M1606.4.1 IRC

4. MECHANICAL SYSTEM PIPING INSULATION. R-3 FOR PIPING CARRYING FLUIDS AT >105°F OR <55°F IS REQUIRED

5. MECHANICAL VENTILATION. OUTDOOR AIR INTAKES OR EXHAUSTS SHALL HAVE DAMPERS

6. SERVICE WATER HEATING. PIPING IN THE CIRCULATING HOT WATER SYSTEM SHALL BE INSULATED TO AN R-3 AND SYSTEM TO INCLUDE MANUAL OR AUTOMATIC SWITCH THAT CAN TURN OFF THE SYSTEM WHEN IT IS NOT USED. WATER HEATERS WITH PIPE RISERS SHALL HAVE HEAT TRAPS ON BOTH INLET AND OUTLET OF WATER HEATER UNLESS THE WATER HEATER HAS INTEGRAL HEAT TRAPS OR IS PART OF A CIRCULATION SYSTEM. TYPICAL METHODS USED FOR CREATING HEAT TRAPS ARE "U" OR "RAMS HORN" BENDS IN THE FLEXIBLE PIPE CONNECTORS OR INSTALLING AFTERMARKET PIPE NIPPLES WITH INTEGRAL TRAPS.

7. EQUIPMENT SIZING. HEATING AND COOLING EQUIPMENT SHALL BE SIZED BASED ON BUILDING LOADS CALCULATED IN ACCORDANCE WITH ACCA (AIR CONDITIONING CONTRACTORS OF AMERICA) MANUAL-J, A SIMPLIFIED METHOD OF CALCULATING HEATING AND COOLING LOADS. THE MANUAL-J CALCULATIONS SHALL BE SUBMITTED UPON APPLICATION FOR THE MECHANICAL PERMIT.

SECTION 302.1 OF IECC SPECIFIES THE INTERIOR DESIGN TEMPERATURES USED FOR HEATING AND COOLING LOAD CALCULATIONS AS MAXIMUM OF 72°F FOR HEATINGAND MINIMUM 75°F FOR COOLING.

LEGEND

INSULATION PERIMETER

AREA OF INSULATION ABOVE OR BELOW AS INDICATED

GTM ARCHITECTS

7735 OLD GEORGETOWN ROAD
SUITE 700
BETHESDA, MD 20814
(240)333-2000
(240)333-2001 FAX
WWW.GTMARCHITECTS.COM

Seal

STATE OF MARYLAND — STEVEN A. MOLO — 7243 — ARCHITECT

I certify that these documents were prepared or approved by me, and that I am a duly licensed architect under the laws of the State of Maryland, license number 5080, Expiration Date: 12/06/2022.

Consultant

Project
25 High Street
LOT 1
25 HIGH STREET, BROOKEVILLE, MD 20833

Owner

Developer

PERMIT SET	4-11-2022
Issue Description	*Date*

GTM Project No.	18.0320
Checked By	GTM
Drawn By	NW/KF
Scale	AS NOTED

Sheet Title
THERMAL ENVELOPE DIAGRAMS

Sheet No.
EC001

COPYRIGHT, 2019 GTM ARCHITECTS, INC.

FILE NAME:

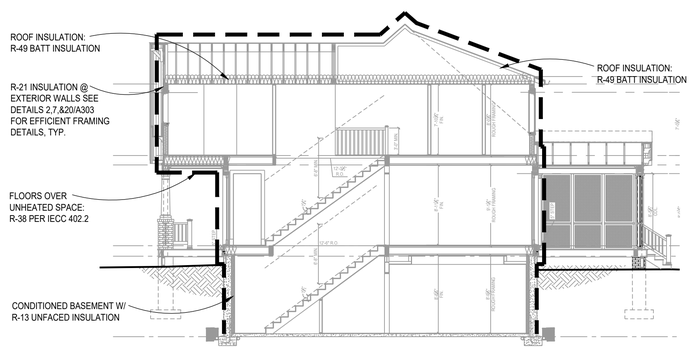

1 TYPICAL THERMAL ENVELOPE BUILDING SECTION

SCALE: 1/8"=1'=0

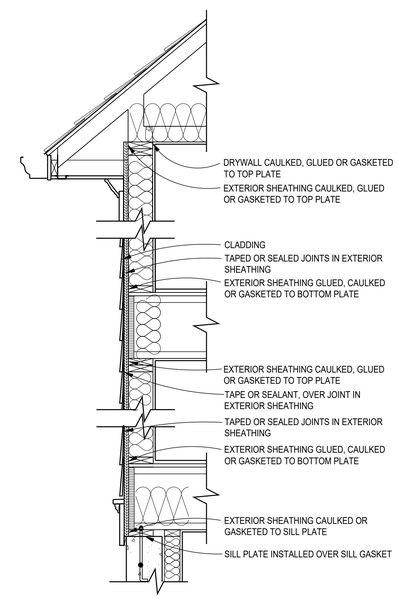

2 ENVELOPE AIR SEALING DETAIL

SCALE: 3/4"=1'-0"

*95 TOTAL SQ. FT. OF PROPOSED
R-38 CEILING/ATTIC INSULATION

500 SQ. FT ALLOWED PER IECC 402.2

WINDOW/DOORS THERMAL DATA

THERMAL PERFORMACE DATA FOR DOORS & WINDOWS

OPENING TYPE	U-VALUE	SHGC
CASEMENT WINDOWS	0.35	0.40
DOUBLE HUNG WINDOWS	0.35	0.40
FRENCH INSWINGING/ SLIDING DOORS	0.35	0.40
EXTERIOR SWINGING DOORS	0.35	0.40

THE AREA-WEIGHTED AVERAGE MAXIMUM FENESTRATION U-FACTOR PERMITTED USING TRADE-OFFS FROM SECTION 402.1 IN ZONE 4 SHALL BE .35 FOR VERTICAL FENESTRATION AND .55 FOR SKYLITES

ENERGY CONSERVATION NOTES

1. The following provisions for thermal resistance meet or exceed the requirements stipulated by the International Energy Conservation Code.
2. INSULATION: IRC

CEILING (OF UPPERMOST STORY)	R-49 W/ 500SF R-30 ALLOWANCE, OR R-38 CONTINUOUS
VAULTED CEILING	R-38
EXTERIOR FRAME WALLS	R-20 OR 13+5 (EXTERIOR)
RIM JOISTS	EQUAL TO WALL BELOW
FLOORS OVER UNHEATED SPACES (INCLUDING FLOOR OVERHANGS)	R-38
MASONRY WALLS (ENCLOSED HEATED LIVING AREAS)	R-13 OR R-10 CONTINUOUS
SLAB ON GRADE (HEATED SPACE) 24" PERIMETER INSULATION	R-10
WINDOWS	0.35 U FACTOR, 0.40 SHGC
DOORS	SEE SECTION R402.3.4

*ALL VALUES ARE TYPICAL UNLESS NOTED OTHERWISE IN ARCHITECTURAL DRAWINGS

3. Air Infiltration:
A. Windows: not exceeding five tenths (0.5) CFM of sash crack.
B. Sliding Glass Doors: not exceeding five tenths (0.5) CFM per foot of door area.
C. Swinging Doors: not exceeding one and twenty-five hundredths (1.25) CFM per square foot of door area. Provide 1" fiberglass sill sealer between foundation wall and all sill plates.
D. In order to seal between dissimilar materials to allow for differential expansion and contraction, the following shall be caulked, gasketed, weatherstripped or otherwise sealed with an air barrier material, suitable film or solid material:

1. All joints, seams, and penetrations
2. Site-built windows, doors, and skylites
3. Openings between window and door assemblies and their respective jambs & framing
4. Utility penetrations
5. Dropped ceilings or chases adjacent to the thermal envelope
6. Knee walls
7. Walls and ceilings separating a garage from conditioned spaces
8. Behind tubs and showers on exterior walls
9. Common walls between dwelling units
10. Attic access openings
11. Rim joist junction
12. Other sources of infiltration

HVAC SYSTEMS & WATER HEATING

1. HEATING & COOLING EQUIP. CONTROLS. AT LEAST ONE PRE-PROGRAMMED PROGRAMMABLE THERMOSTAT IS REQUIRED WHEN USING A FORCED AIR SYSTEM. SEPARATE THERMOSTATS ARE REQUIRED FOR EACH HEATING/COOLING ZONE IN THE DWELLING.

2. DUCT INSULATION. SUPPLY DUCTS LOCATED OUTSIDE THE BUILDING THERMAL ENVELOPE SHALL BE INSULATED TO MINIMUM R-8; ALL OTHER DUCTS INSULATED TO A MINIMUM OF R-6

3. DUCT SEALING. ALL DUCTS, AIR HANDLERS, FILTER BOXES, & BUILDING CAVITIES MUST BE SEALED. JOINTS & SEAMS SHALL COMPLY W/ M1606.4.1 IRC

4. MECHANICAL SYSTEM PIPING INSULATION. R-3 FOR PIPING CARRYING FLUIDS AT >105°F OR <55°F IS REQUIRED

5. MECHANICAL VENTILATION. OUTDOOR AIR INTAKES OR EXHAUSTS SHALL HAVE DAMPERS

6. SERVICE WATER HEATING. PIPING IN THE CIRCULATING HOT WALTER SYSTEM SHALL BE INSULATED TO AN R-3 AND SYSTEM TO INCLUDE MANUAL OR AUTOMATIC SWITCH THAT CAN TURN OFF THE SYSTEM WHEN IT IS NOT USED, WATER HEATERS WITH PIPE RISERS SHALL HAVE HEAT TRAPS ON BOTH INLET AND OUTLET OF WATER HEATER UNLESS THE WATER HEATER HAS INTEGRAL HEAT TRAPS OR IS PART OF A CIRCULATION SYSTEM. TYPICAL METHODS USED FOR CREATING HEAT TRAPS ARE "U" OR "RAMS HORN" BENDS IN THE FLEXIBLE PIPE CONNECTORS OR INSTALLING AFTERMARKET PIPE NIPPLES WITH INTEGRAL TRAPS.

7. EQUIPMENT SIZING. HEATING AND COOLING EQUIPMENT SHALL BE SIZED BASED ON BUILDING LOADS CALCULATED IN ACCORDANCE WITH ACCA (AIR CONDITIONING CONTRACTORS OF AMERICA) MANUAL-J, A SIMPLIFIED METHOD OF CALCULATING HEATING AND COOLING LOADS. THE MANUAL-J CALCULATIONS SHALL BE SUBMITTED UPON APPLICATION FOR THE MECHANICAL PERMIT.

SECTION 302.1 OF IECC SPECIFIES THE INTERIOR DESIGN TEMPERATURES USED FOR HEATING AND COOLING LOAD CALCULATIONS AS MAXIMUM OF 72°F FOR HEATINGAND MINIMUM 75°F FOR COOLING.

LEGEND

INSULATION PERIMETER

AREA OF INSULATION ABOVE OR BELOW AS INDICATED

GTM ARCHITECTS

7735 OLD GEORGETOWN ROAD
SUITE 700
BETHESDA, MD 20814
(240)333-2000
(240)333-2001 FAX
WWW.GTMARCHITECTS.COM

Seal

STATE OF MARYLAND
NICHOLAS WEIDENBACHER
No. 35835
ARCHITECT

I certify that these documents were prepared or approved by me, and that I am a duly licensed architect under the laws of the State of Maryland, license number 35835. Expiration Date: 12/06/2022

Consultant

Project

25 High Street
LOT 1

25 HIGH STREET, BROOKEVILLE, MD 20833

Owner

Developer

PERMIT SET	4-11-2022
Issue Description	*Date*

GTM Project No.	18.0320
Checked By	GTM
Drawn By	NW/KF
Scale	AS NOTED

Sheet Title

THERMAL ENVELOPE DIAGRAMS

Sheet No.

EC002

COPYRIGHT, 2019 GTM ARCHITECTS, INC.

FILE NAME:

5 4 3 2 1

D

Generated by REScheck-Web Software
Compliance Certificate

Project PARCEL 770 - LOT B

Energy Code:	**2018 IECC**
Location:	**Prince George's County, Maryland**
Construction Type:	**Single-family**
Project Type:	**New Construction**
Conditioned Floor Area:	**5,248 ft2**
Glazing Area	**27%**
Climate Zone:	**4 (4999 HDD)**
Permit Date:	
Permit Number:	

Construction Site:

Owner/Agent:
Maryland

Designer/Contractor:
Maryland

Compliance: Passes using UA trade-off

Compliance: **5.6% Better Than Code** Maximum UA: **552** Your UA: **521** Maximum SHGC: **0.40** Your SHGC: **0.24**

The % Better or Worse Than Code Index reflects how close to compliance the house is based on code trade-off rules.
It DOES NOT provide an estimate of energy use or cost relative to a minimum-code home.

Slab-on-grade tradeoffs are no longer considered in the UA or performance compliance path in REScheck. Each slab-on-grade assembly in the specified climate zone must meet the minimum energy code insulation R-value and depth requirements.

Envelope Assemblies

Assembly	Gross Area or Perimeter	Cavity R-Value	Cont. R-Value	Prop. U-Factor	Req. U-Factor	Prop. UA	Req. UA
Floor over unheated space: Flat Ceiling or Scissor Truss	30	38.0	0.0	0.030	0.026	1	1
Eaves: Flat Ceiling or Scissor Truss	138	38.0	0.0	0.030	0.026	4	4
Ceiling: Raised or Energy Truss	1,549	49.0	0.0	0.020	0.026	31	40
Wall: Wood Frame, 16" o.c.	2,936	21.0	0.0	0.057	0.060	120	126
Door Copy: Solid Door (under 50% glazing)	49			0.270	0.320	13	16
Door: Glass Door (over 50% glazing) SHGC: 0.25	96			0.300	0.320	29	31
Windows Dbl Hung: Wood Frame SHGC: 0.24	644			0.300	0.320	193	206
Windows Casement: Wood Frame SHGC: 0.23	48			0.280	0.320	13	15
Basement Wall: Solid Concrete or Masonry Wall height: 8.8' Depth below grade: 7.0' Insulation depth: 8.8'	1,860	13.0	0.0	0.061	0.059	113	109
Window: Wood Frame SHGC: 0.24	14			0.300	0.320	4	4

C

Compliance Statement: The proposed building design described here is consistent with the building plans, specifications, and other calculations submitted with the permit application. The proposed building has been designed to meet the 2018 IECC requirements in RES*check* Version : REScheck-Web and to comply with the mandatory requirements listed in the RES*check* Inspection Checklist.

Name - Title ____ Signature ____ Date ____

RES*check* Software Version : REScheck-Web
Inspection Checklist

Energy Code: 2018 IECC

Requirements: 0.0% were addressed directly in the RES*check* software

Text in the "Comments/Assumptions" column is provided by the user in the REScheck Requirements screen. For each requirement, the user certifies that a code requirement will be met and how that is documented, or that an exception is being claimed. Where compliance is itemized in a separate table, a reference to that table is provided.

Section # & Req.ID	Pre-Inspection/Plan Review	Plans Verified Value	Field Verified Value	Complies?	Comments/Assumptions
103.1, 103.2 [PR1][1]	Construction drawings and documentation demonstrate energy code compliance for the building envelope. Thermal envelope represented on construction documents.			☐Complies ☐Does Not ☐Not Observable ☐Not Applicable	
103.1, 103.2, 403.7 [PR3][1]	Construction drawings and documentation demonstrate energy code compliance for lighting and mechanical systems. Systems serving multiple dwelling units must demonstrate compliance with the IECC Commercial Provisions.			☐Complies ☐Does Not ☐Not Observable ☐Not Applicable	
302.1, 403.7 [PR2][2]	Heating and cooling equipment is sized per ACCA Manual S based on loads calculated per ACCA Manual J or other methods approved by the code official.	Heating: Btu/hr_____ Cooling: Btu/hr_____	Heating: Btu/hr_____ Cooling: Btu/hr_____	☐Complies ☐Does Not ☐Not Observable ☐Not Applicable	

Additional Comments/Assumptions:

1 High Impact (Tier 1) 2 Medium Impact (Tier 2) 3 Low Impact (Tier 3)

Section # & Req.ID	Foundation Inspection	Plans Verified Value	Field Verified Value	Complies?	Comments/Assumptions
402.1.1 [FO4][1]	Conditioned basement wall insulation R-value. Where interior insulation is used, verification may need to occur during Insulation Inspection. Not required in warm-humid locations in Climate Zone 3.	R-_____ R-_____	R-_____ R-_____	☐Complies ☐Does Not ☐Not Observable ☐Not Applicable	*See the Envelope Assemblies table for values.*
303.2 [FO5][1]	Conditioned basement wall insulation installed per manufacturer's instructions.			☐Complies ☐Does Not ☐Not Observable ☐Not Applicable	
402.2.9 [FO6][1]	Conditioned basement wall insulation depth of burial or distance from top of wall.	_____ ft	_____ ft	☐Complies ☐Does Not ☐Not Observable ☐Not Applicable	*See the Envelope Assemblies table for values.*
303.2.1 [FO11][2]	A protective covering is installed to protect exposed exterior insulation and extends a minimum of 6 in. below grade.			☐Complies ☐Does Not ☐Not Observable ☐Not Applicable	
403.9 [FO12][2]	Snow- and ice-melting system controls installed.			☐Complies ☐Does Not ☐Not Observable ☐Not Applicable	

Additional Comments/Assumptions:

1 High Impact (Tier 1) 2 Medium Impact (Tier 2) 3 Low Impact (Tier 3)

Section # & Req.ID	Framing / Rough-In Inspection	Plans Verified Value	Field Verified Value	Complies?	Comments/Assumptions
402.1.1, 402.3.4 [FR1][1]	Door U-factor.	U-_____	U-_____	☐Complies ☐Does Not ☐Not Observable ☐Not Applicable	*See the Envelope Assemblies table for values.*
402.1.1, 402.3.1, 402.3.3, 402.5 [FR2][1]	Glazing U-factor (area-weighted average).	U-_____	U-_____	☐Complies ☐Does Not ☐Not Observable ☐Not Applicable	*See the Envelope Assemblies table for values.*
303.1.3 [FR4][1]	U-factors of fenestration products are determined in accordance with the NFRC test procedure or taken from the default table.			☐Complies ☐Does Not ☐Not Observable ☐Not Applicable	
402.4.1.1 [FR23][1]	Air barrier and thermal barrier installed per manufacturer's instructions.			☐Complies ☐Does Not ☐Not Observable ☐Not Applicable	
402.4.3 [FR20][1]	Fenestration that is not site built is listed and labeled as meeting AAMA /WDMA/CSA 101/I.S.2/A440 or has infiltration rates per NFRC 400 that do not exceed code limits.			☐Complies ☐Does Not ☐Not Observable ☐Not Applicable	
402.4.5 [FR16][2]	IC-rated recessed lighting fixtures sealed at housing/interior finish and labeled to indicate ≤2.0 cfm leakage at 75 Pa.			☐Complies ☐Does Not ☐Not Observable ☐Not Applicable	
403.3.1 [FR12][1]	Supply and return ducts in attics insulated >= R-8 where duct is >= 3 inches in diameter and >= R-6 where < 3 inches. Supply and return ducts in other portions of the building insulated >= R-6 for diameter >= 3 inches and R-4.2 for < 3 inches in diameter.			☐Complies ☐Does Not ☐Not Observable ☐Not Applicable	
403.3.2 [FR13][1]	Ducts, air handlers and filter boxes are sealed with joints/seams compliant with International Mechanical Code or International Residential Code, as applicable.			☐Complies ☐Does Not ☐Not Observable ☐Not Applicable	
403.3.5 [FR15][3]	Building cavities are not used as ducts or plenums.			☐Complies ☐Does Not ☐Not Observable ☐Not Applicable	
403.4 [FR17][2]	HVAC piping conveying fluids above 105 ºF or chilled fluids below 55 ºF are insulated to ≥R-3.	R-_____	R-_____	☐Complies ☐Does Not ☐Not Observable ☐Not Applicable	
403.4.1 [FR24][1]	Protection of insulation on HVAC piping.			☐Complies ☐Does Not ☐Not Observable ☐Not Applicable	
403.5.3 [FR18][2]	Hot water pipes are insulated to ≥R-3.	R-_____	R-_____	☐Complies ☐Does Not ☐Not Observable ☐Not Applicable	

1 High Impact (Tier 1) 2 Medium Impact (Tier 2) 3 Low Impact (Tier 3)

B

Section # & Req.ID	Framing / Rough-In Inspection	Plans Verified Value	Field Verified Value	Complies?	Comments/Assumptions
403.6 [FR19][2]	Automatic or gravity dampers are installed on all outdoor air intakes and exhausts.			☐Complies ☐Does Not ☐Not Observable ☐Not Applicable	

Additional Comments/Assumptions:

1 High Impact (Tier 1) 2 Medium Impact (Tier 2) 3 Low Impact (Tier 3)

Section # & Req.ID	Final Inspection Provisions	Plans Verified Value	Field Verified Value	Complies?	Comments/Assumptions
402.1.1, 402.2.1, 402.2.2, 402.2.6 [FI1][1]	Ceiling insulation R-value.	R-_____ ☐ Wood ☐ Steel	R-_____ ☐ Wood ☐ Steel	☐Complies ☐Does Not ☐Not Observable ☐Not Applicable	*See the Envelope Assemblies table for values.*
303.1.1.1, 303.2 [FI2][1]	Ceiling insulation installed per manufacturer's instructions. Blown insulation marked every 300 ft².			☐Complies ☐Does Not ☐Not Observable ☐Not Applicable	
402.2.3 [FI22][2]	Vented attics with air permeable insulation include baffle adjacent to soffit and eave vents that extends over insulation.			☐Complies ☐Does Not ☐Not Observable ☐Not Applicable	
402.2.4 [FI3][1]	Attic access hatch and door insulation ≥R-value of the adjacent assembly.	R-_____	R-_____	☐Complies ☐Does Not ☐Not Observable ☐Not Applicable	
402.4.1.2 [FI17][1]	Blower door test @ 50 Pa. <=5 ach in Climate Zones 1-2, and <=3 ach in Climate Zones 3-8.	ACH 50 =_____	ACH 50 =_____	☐Complies ☐Does Not ☐Not Observable ☐Not Applicable	
403.3.3 [FI27][1]	Ducts are pressure tested to determine air leakage with either: Rough-in test: Total leakage measured with a pressure differential of 0.1 inch w.g. across the system including the manufacturer's air handler enclosure if installed at time of test. Postconstruction test: Total leakage measured with a pressure differential of 0.1 inch w.g. across the entire system including the manufacturer's air handler enclosure.	_____ cfm/100 ft²	_____ cfm/100 ft²	☐Complies ☐Does Not ☐Not Observable ☐Not Applicable	
403.3.4 [FI4][1]	Duct tightness test result of <=4 cfm/100 ft2 across the system or <=3 cfm/100 ft2 without air handler @ 25 Pa. For rough-in tests, verification may need to occur during Framing Inspection.	_____ cfm/100 ft²	_____ cfm/100 ft²	☐Complies ☐Does Not ☐Not Observable ☐Not Applicable	
403.3.2.1 [FI24][1]	Air handler leakage designated by manufacturer at <=2% of design air flow.			☐Complies ☐Does Not ☐Not Observable ☐Not Applicable	
403.1.1 [FI9][2]	Programmable thermostats installed for control of primary heating and cooling systems and initially set by manufacturer to code specifications.			☐Complies ☐Does Not ☐Not Observable ☐Not Applicable	
403.1.2 [FI10][2]	Heat pump thermostat installed on heat pumps.			☐Complies ☐Does Not ☐Not Observable ☐Not Applicable	
403.5.1 [FI11][2]	Circulating service hot water systems have automatic or accessible manual controls.			☐Complies ☐Does Not ☐Not Observable ☐Not Applicable	

1 High Impact (Tier 1) 2 Medium Impact (Tier 2) 3 Low Impact (Tier 3)

Section # & Req.ID	Final Inspection Provisions	Plans Verified Value	Field Verified Value	Complies?	Comments/Assumptions
403.6.1 [FI25][2]	All mechanical ventilation system fans not part of tested and listed HVAC equipment meet efficacy and air flow limits per Table R403.6.1.			☐Complies ☐Does Not ☐Not Observable ☐Not Applicable	
403.2 [FI26][2]	Hot water boilers supplying heat through one- or two-pipe heating systems have outdoor setback control to lower boiler water temperature based on outdoor temperature.			☐Complies ☐Does Not ☐Not Observable ☐Not Applicable	
403.5.1.1 [FI28][2]	Heated water circulation systems have a circulation pump. The system return pipe is a dedicated return pipe or a cold water supply pipe. Gravity and thermos-syphon circulation systems are not present. Controls for circulating hot water system pumps start the pump with signal for hot water demand within the occupancy. Controls automatically turn off the pump when water is in circulation loop is at set-point temperature and no demand for hot water exists.			☐Complies ☐Does Not ☐Not Observable ☐Not Applicable	
403.5.1.2 [FI29][2]	Electric heat trace systems comply with IEEE 515.1 or UL 515. Controls automatically adjust the energy input to the heat tracing to maintain the desired water temperature in the piping.			☐Complies ☐Does Not ☐Not Observable ☐Not Applicable	
403.5.2 [FI30][2]	Demand recirculation water systems have controls that manage operation of the pump and limit the temperature of the water entering the cold water piping to <= 104ºF.			☐Complies ☐Does Not ☐Not Observable ☐Not Applicable	
403.5.4 [FI31][2]	Drain water heat recovery units tested in accordance with CSA B55.1. Potable water-side pressure loss of drain water heat recovery units < 3 psi for individual units connected to one or two showers. Potable water-side pressure loss of drain water heat recovery units < 2 psi for individual units connected to three or more showers.			☐Complies ☐Does Not ☐Not Observable ☐Not Applicable	
404.1 [FI6][1]	90% or more of permanent fixtures have high efficacy lamps.			☐Complies ☐Does Not ☐Not Observable ☐Not Applicable	
404.1.1 [FI23][3]	Fuel gas lighting systems have no continuous pilot light.			☐Complies ☐Does Not ☐Not Observable ☐Not Applicable	
401.3 [FI7][2]	Compliance certificate posted.			☐Complies ☐Does Not ☐Not Observable ☐Not Applicable	

1 High Impact (Tier 1) 2 Medium Impact (Tier 2) 3 Low Impact (Tier 3)

Section # & Req.ID	Final Inspection Provisions	Plans Verified Value	Field Verified Value	Complies?	Comments/Assumptions
303.3 [FI18][3]	Manufacturer manuals for mechanical and water heating systems have been provided.			☐Complies ☐Does Not ☐Not Observable ☐Not Applicable	

Additional Comments/Assumptions:

1 High Impact (Tier 1) 2 Medium Impact (Tier 2) 3 Low Impact (Tier 3)

2018 IECC Energy Efficiency Certificate

Insulation Rating	R-Value	
Above-Grade Wall	**21.00**	
Below-Grade Wall	**13.00**	
Floor	**0.00**	
Ceiling / Roof	**49.00**	
Ductwork (unconditioned spaces):	_____	
Glass & Door Rating	**U-Factor**	**SHGC**
Window	**0.30**	**0.24**
Door	**0.30**	**0.25**
Heating & Cooling Equipment	**Efficiency**	
Heating System:__________	_____	
Cooling System:__________	_____	
Water Heater:__________	_____	

Name: __________ **Date:**__________

Comments

A

FILE NAME:

GTM ARCHITECTS

7735 OLD GEORGETOWN ROAD
SUITE 700
BETHESDA, MD 20814
(240)333-2000
(240)333-2001 FAX
WWW.GTMARCHITECTS.COM

GTM

Seal

STATE OF MARYLAND · GEORGE · MYERS · 8385 · ARCHITECT

I certify that these documents were prepared or approved by me, and that I am a duly licensed architect under the laws of the State of Maryland, license number 8385, Expiration Date: 12-06-2022.

Consultant

Project

25 High Street LOT 1

25 HIGH STREET, BROOKEVILLE, MD 20833

Owner

Developer

Issue Description	*Date*
PERMIT SET	4-11-2022

GTM Project No.	18.0320
Checked By	GTM
Drawn By	NW/KF
Scale	AS NOTED

Sheet Title

ENERGY CALCS

Sheet No.

EC003

COPYRIGHT, 2019 GTM ARCHITECTS, INC.

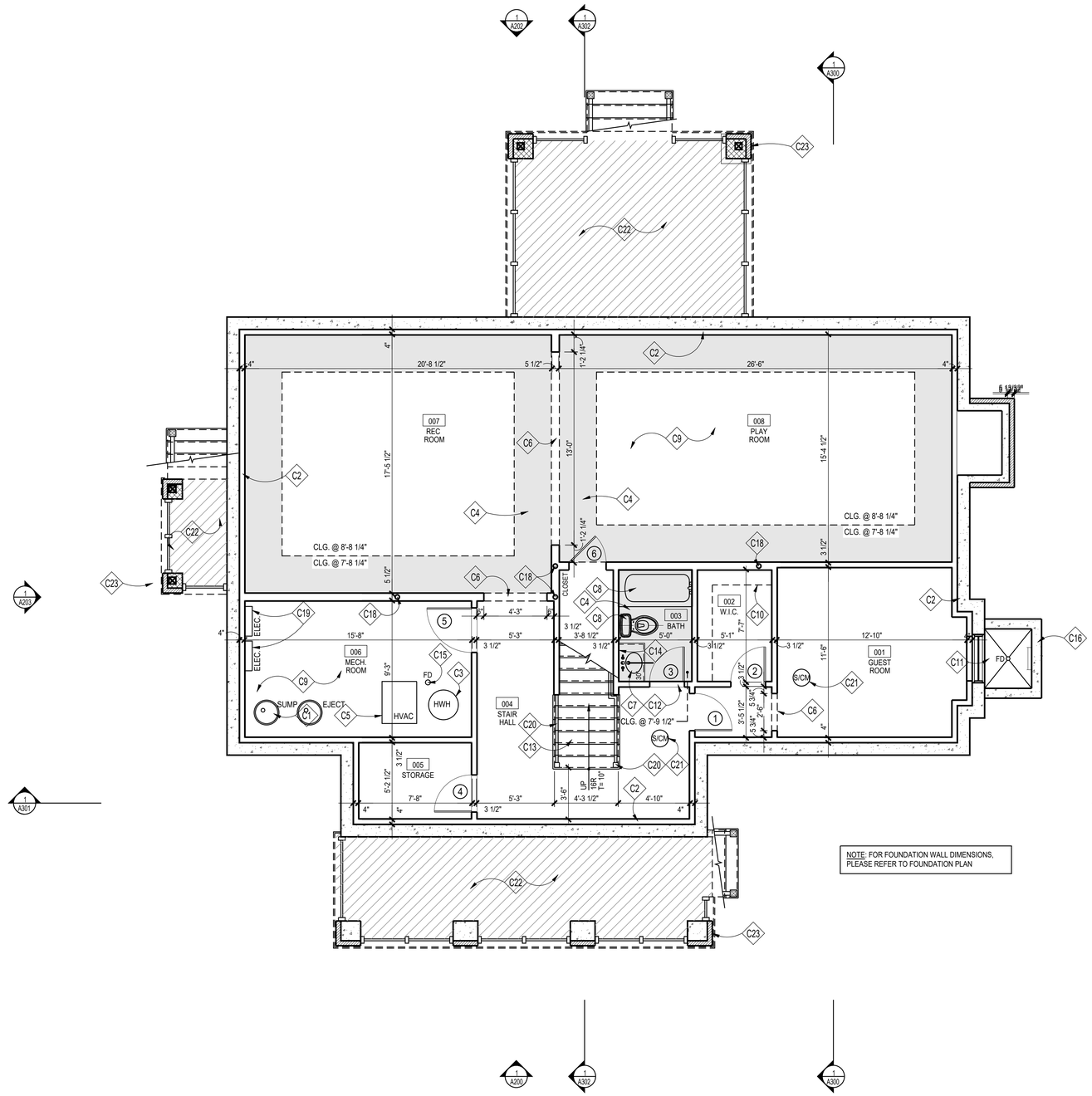

1 BASEMENT PLAN
SCALE: 1/4"=1'=0

PLAN NORTH

CONSTRUCTION NOTES

- C1 SUMP PUMP WITH BATTERY POWERED SUMP BACKUP; LOCATION T.B.D.
- C2 FUR OUT WALLS W/ FULL 2x4's W/ R-13 BATT INSULATION, TYP.; PROVIDE P.T. SILL; HOLD 1/2" OFF MASONRY WALL
- C3 HOT WATER HEATER, LOCATION APPROXIMATE, SEE SHEET '002'
- C4 TONED AREA INDICATES LOWERED CEILING TO ALLOW FOR DUCTWORK, BEAMS AND/OR AESTHETIC APPEAL
- C5 HVAC, SEE SHEET 'EC001'
- C6 CASED OPENING @ 6'-8" FINISHED
- C7 VANITY W/ SINK, FAUCET & COUNTERTOP; T.B.S.
- C8 PLUMBING FIXTURES & ACCESSORIES T.B.S.
- C9 REINF. CONC. SLAB ON GRADE; SEE FOUNDATION PLAN
- C10 PROVIDE CLOSET ROD & SHELF
- C11 EGRESS WINDOW; MAX. 44" SILL HEIGHT FROM A.F.F.
- C12 MARBLE THRESHOLD T.B.S.
- C13 WD. STEPS; 1x RISERS W/ TREADS TO MATCH H.W.F.; WOOD RAILING T.B.S, SEE DETAILS '1&5/A303', FOLLOW IRC 2018 R311.7 FOR STAIR AND RAILING
- C14 1/4" POLISHED PLATE GLASS MIRROR, T.B.S.
- C15 DRAIN FOR HWH & HVAC. LOCATION T.B.D., RUN TO SUMP PUMP
- C16 WINDOW WELL; EGRESS LADDER & COVER AS REQ'D. BY CODE DRAIN TO SUMP PUMP OR DAYLIGHT
- C17 NOT USED
- C18 STEEL COLUMN, SEE FOUNDATION AND FRAMING PLANS
- C19 APPROXIMATE ELECTRICAL PANEL LOCATION; FIELD VERIFY FINAL LOCATION
- C20 INTERIOR WOOD RAILING, T.B.S., FOLLOW IRC 2018 R311.7
- C21 INSTALL INTERCONNECTED & HARD-WIRED SMOKE DETECTORS/ SMOKE & CARBON MONOXIDE DETECTORS IN ACCORDANCE W/ IRC 2018
- C22 4" WASHED GRAVEL OVER LANDSCAPE FABRIC
- C23 CONC. PIER W/ BRICK VENEER ADHERED DIRECTLY TO FACE OF CONC; EXT. BELOW GRADE. SEE STRUCTURAL FOR DETAIL

NOTE:

1. UNLESS INDICATED OTHERWISE, DIMENSIONS ARE TO FACE OF FRAMING
2. VERIFY ALL EXTERIOR RISER + TREAD DIMENSIONS IN THE FIELD
3. SEE DETAILS '18-20/A304' FOR ENERGY EFFICIENT FRAMING DETAILS
4. PROVIDE MINERAL WOOL SOUND INSULATION IN WALLS, CEILING, + FLOOR OF THE FOLLOWING ROOMS (U.N.O.):

006 MECHANICAL ROOM
003 BATH

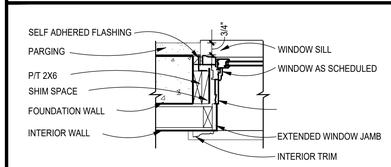

2 TYP. BASEMENT WINDOW/DOOR JAMB
Scale: 1"=1'-0"

WALL TYPES

TYPICAL NEW EXTERIOR WALL; 10" CONC. WALL; SEE FOUNDATION PLAN; FUR WHERE SHOWN WITH 2x4 STUDS @ 16" O.C.,
(SEE THERMAL ENVELOPE, SHEET "EC001" FOR INSULATION INFORMATION)

TYPICAL NON-BEARING INTERIOR PARTITION; 2"x4" STUDS 16" O.C. W/ ½" GYP. BD. EACH SIDE; INCREASE WALL THICKNESS AS SHOWN TO ALIGN FINISHES WHERE SHOWN

GTM ARCHITECTS

7735 OLD GEORGETOWN ROAD
SUITE 700
BETHESDA, MD 20814
(240)333-2000
(240)333-2001 FAX
WWW.GTMARCHITECTS.COM

Seal

I certify that these documents were prepared or approved by me, and that I am a duly licensed architect under the laws of the State of Maryland, license number 5886, Expiration Date: 12/06/2022.

Consultant

Project
25 High Street
LOT 1
25 HIGH STREET, BROOKEVILLE, MD 20833

Owner

Developer

Issue Description	Date
PERMIT SET	4-11-2022

GTM Project No.	18.0320
Checked By	GTM
Drawn By	NW/KF
Scale	AS NOTED

Sheet Title
BASEMENT PLAN

Sheet No.
A100

COPYRIGHT, 2019 GTM ARCHITECTS, INC.

FILE NAME:

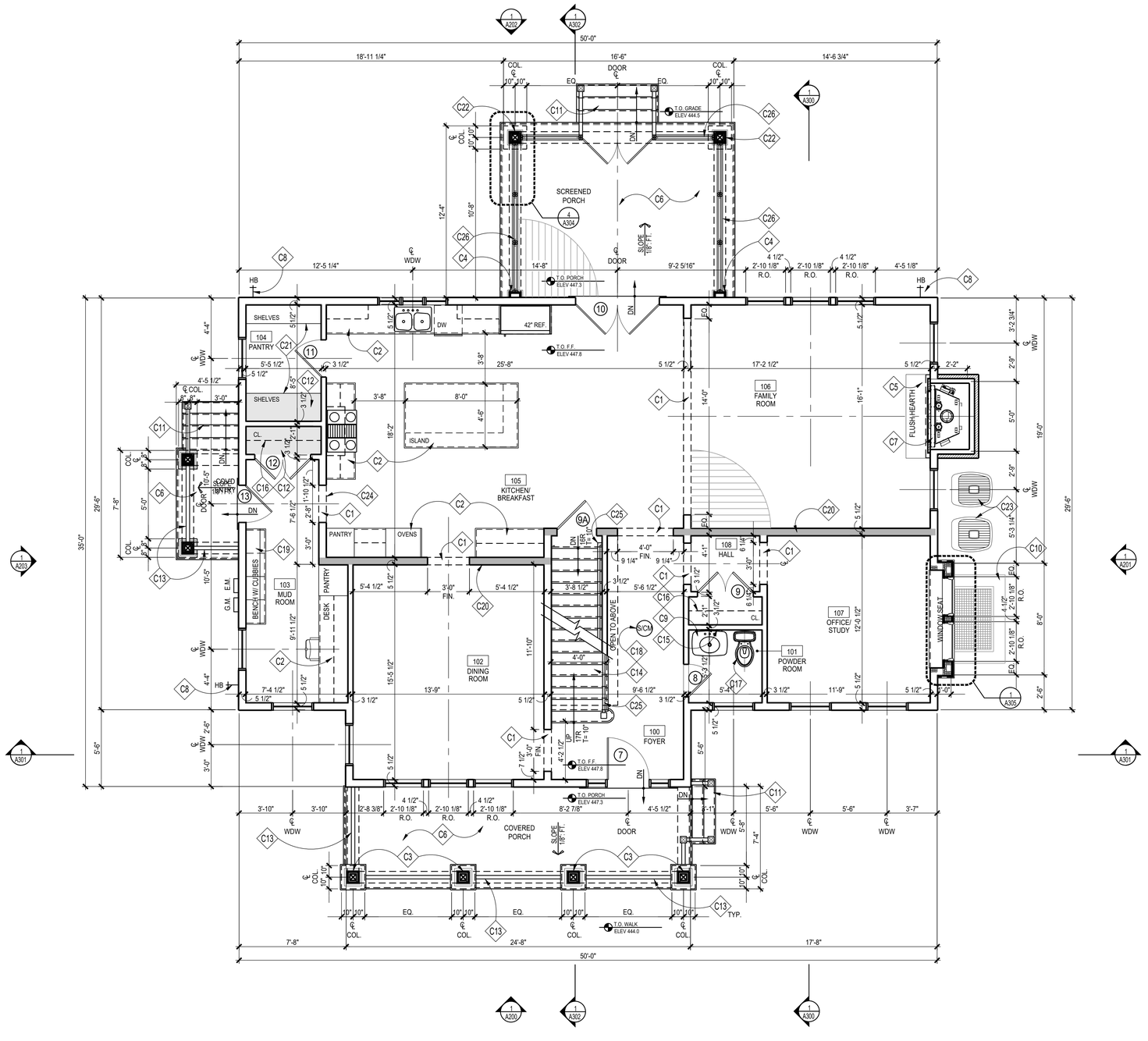

1 FIRST FLOOR PLAN
SCALE: 1/4"=1'=0

PLAN NORTH

CONSTRUCTION NOTES

- C1 CASED OPENING @ 8'-0" FINISHED
- C2 KITCHEN CABINETS, APPLIANCES + COUNTER TOPS, ETC. T.B.S.
- C3 PTD. CRAFTSMAN 10"X10" SQ. TAPERED COLUMN SURROUND W/ NECK MOULD, TUSCAN CAP & BASE
- C4 PTD. PILASTER TO MATCH COLUMNS; SEE ELEVATIONS
- C5 HEARTH, MATERIAL T.B.S.
- C6 T&G PORCH FLOOR; T.B.S.
- C7 B-VENT FIREPLACE, T.B.S. INSTALL PER MANUFACTURER REQUIREMENTS
- C8 FROST PROOF HOSE BIB BELOW; CONFIRM LOCATION
- C9 PEDASTAL SINK, T.B.S.
- C10 WINDOW WELL BELOW; SEE DETAIL '10/A302'
- C11 COMPOSITE/ WOOD TREADS TO GRADE, T.B.S., F.V. RISE/RUN
- C12 TONED AREA INDICATES LOWERED CEILING TO ALLOW FOR RANGE EXHAUST OUTLET
- C13 PROVIDE PTD WOOD GUARDRAIL T.B.S. TO COMPLY W/ IRC 2018
- C14 WD. STEPS; 1x RISERS W/ TREADS TO MATCH H.W.F.; WOOD RAILING T.B.S, SEE DETAILS '1&5/A303', FOLLOW IRC 2018 R311.7 FOR STAIR AND RAILING
- C15 1/4" POLISHED PLATE GLASS MIRROR, T.B.S.
- C16 PROVIDE CLOSET ROD & SHELF
- C17 PLUMBING FIXTURES & ACCESSORIES T.B.S.
- C18 HARD-WIRED SMOKE DETECTOR/CARBON MONOXIDE COMBO UNIT PER IRC 2018
- C19 BUILT-IN BENCH W/ LOCKERS & HOOKS; SEE TYP DETAIL ON '2/A305'
- C20 DARKER TONED WALL INDICATES 2X6 LOAD BEARING WALL @ 16" O.C.
- C21 (5) EQUALLY SPACED SHELVES, FLOOR TO CEILING, PTD.
- C22 PTD. 10" SQ. COLUMN W/ NECK MOULD, TUSCAN CAP & BASE
- C23 CONDENSOR UNIT LOCATION APPROXIMATE
- C24 THRESHOLD T.B.S.
- C25 INTERIOR WOOD RAILING, T.B.S., FOLLOW IRC 2018 R311.7
- C26 CUSTOM FIXED SCREENING; SEE DETAILS

NOTE:

1. UNLESS INDICATED OTHERWISE, DIMENSIONS ARE TO FACE OF FRAMING
2. VERIFY ALL EXTERIOR RISER + TREAD DIMENSIONS IN THE FIELD
3. SEE DETAILS '18-20/A304' FOR ENERGY EFFICIENT FRAMING DETAILS
4. PROVIDE MINERAL WOOL SOUND INSULATION IN WALLS, CEILING, + FLOOR OF THE FOLLOWING ROOMS (U.N.O.):

101 POWDER ROOM

WALL TYPES

TYPICAL NEW EXTERIOR WALL; 2x6 WOOD STUDS 16" O.C., W/ INSULATION (SEE THERMAL ENVELOPE, SHEET "EC001" FOR INSULATION INFORMATION) W/ ½" OSB SHEATHING, CONTINUOUS AIR & WATER BARRIER, & SEE ELEVATIONS. INTERIOR FINISH TO BE ½" GYP. BD.

TYPICAL NON-BEARING INTERIOR PARTITION; 2x4 WOOD STUDS 16" O.C. W/ ½" GYP. BD. EACH SIDE, INCREASE WALL THICKNESS AS SHOWN TO ALIGN FINISHES WHERE SHOWN

GTM ARCHITECTS

7735 OLD GEORGETOWN ROAD
SUITE 700
BETHESDA, MD 20814
(240)333-2000
(240)333-2001 FAX
WWW.GTMARCHITECTS.COM

Seal

STATE OF MARYLAND — NICHOLAS WILLIAM FOSTER — 22543 — ARCHITECT

I certify that these documents were prepared or approved by me, and that I am a duly licensed architect under the laws of the State of Maryland, license number 5886. Expiration Date: 12-06-2022

Consultant

Project
25 High Street LOT 1
25 HIGH STREET, BROOKEVILLE, MD 20833

Owner

Developer

Issue Description	Date
PERMIT SET	4-11-2022

GTM Project No.	18.0320
Checked By	GTM
Drawn By	NW/KF
Scale	AS NOTED

Sheet Title
FIRST FLOOR PLAN

Sheet No.
A101

COPYRIGHT, 2019 GTM ARCHITECTS, INC.

FILE NAME:

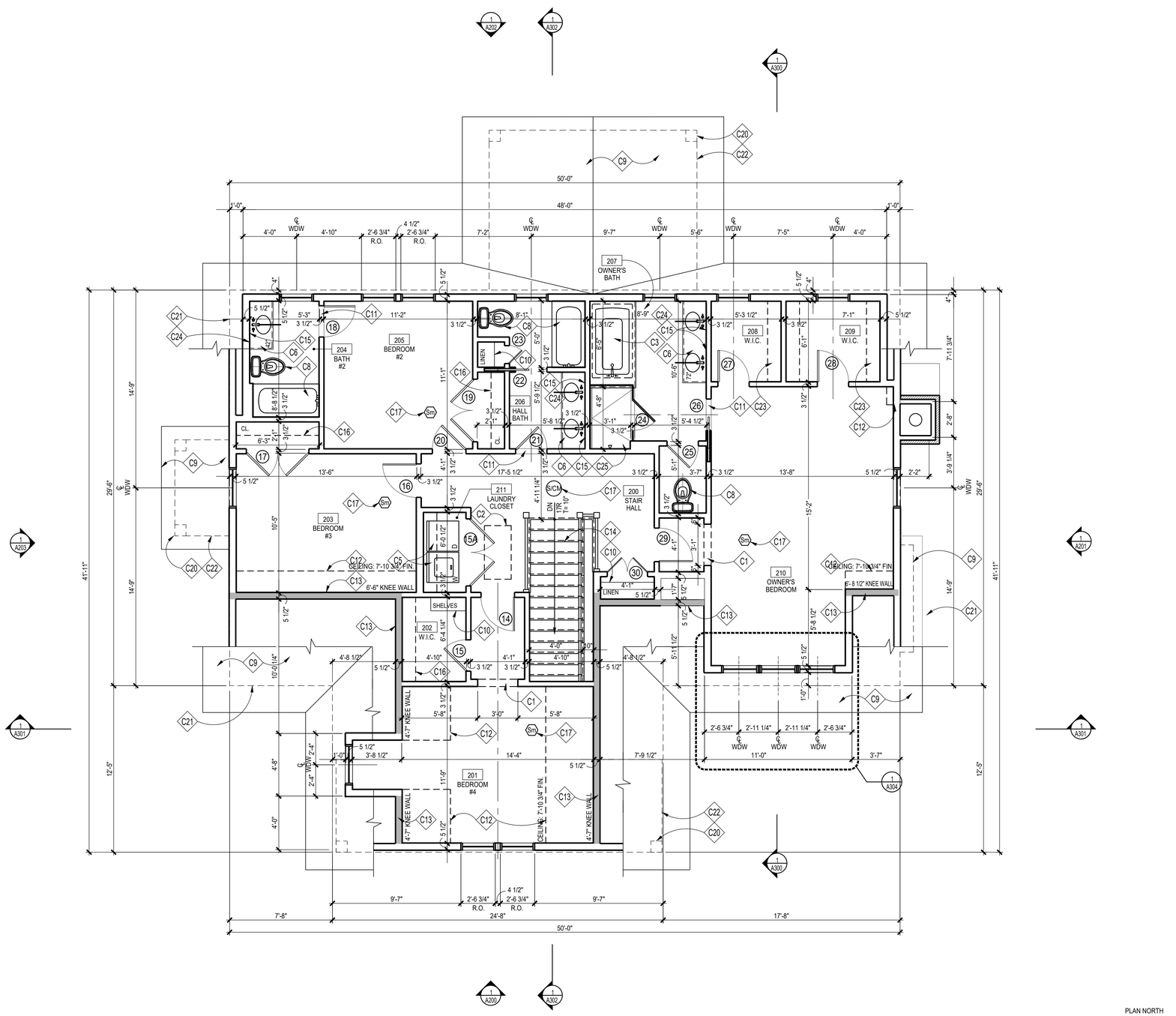

1 SECOND FLOOR PLAN
SCALE: 1/4"=1"=0

PLAN NORTH

CONSTRUCTION NOTES

C1	CASED OPENING @ 7'-0" FINISHED
C2	ATTIC ACCESS HATCH ABOVE
C3	SOAKING TUB WITHIN BUILT-IN DECK, T.B.S.
C4	NOT USED
C5	LAUNDRY ROOM CABINETS, APPLIANCES + COUNTER TOPS, ETC. T.B.S.; PROVIDE OVERFLOW PAN AND DRAIN UNDER WASHER
C6	VANITY W/ SINK, FAUCET & COUNTERTOP; T.B.S.
C7	NOT USED
C8	PLUMBING FIXTURES & ACCESSORIES T.B.S.
C9	ROOF BELOW; SEE ROOF PLAN
C10	PROVIDE (5) EQUALLY SPACED SHELEVES, PTD.
C11	MARBLE THRESHOLD, T.B.S.; SEE DETAIL '5/A302'
C12	DASHED LINE INDICATES SLOPED CEILING
C13	DARKER TONED WALL INDICATES 2X6 LOAD BEARING WALL @ 16" O.C.
C14	WD. STEPS; 1x RISERS W/ TREADS TO MATCH H.W.F.; WOOD RAILING T.B.S, SEE DETAILS '1&5/A303', FOLLOW IRC 2018 R311.7 FOR STAIR AND RAILING
C15	1/4" POLISHED PLATE GLASS MIRROR, T.B.S.
C16	PROVIDE CLOSET ROD & SHELF
C17	HARD-WIRED SMOKE DETECTOR/CARBON MONOXIDE COMBO UNIT PER IRC 2018
C18	NOT USED
C19	NOT USED
C20	DASHED LINE OF COLUMN BELOW
C21	DASHED LINE INDICATES OUTSIDE OF STUD FRAME WALL BELOW
C22	DASHED LINE INDICATES OUTSIDE FACE OF BEAM
C23	CUSTOM CLOSET SYSTEM, COORD. W/ OWNER
C24	MEDICINE CABINET, T.B.S. CONFIRM W/ OWNER
C25	CUSTOM PAN FORMED TILE SHOWER W/ 4" CURB, PROVIDE MEMBRANE LINER & 1/2" DUROCK AROUND ALL SIDES. EXTEND TILE TO CEILING, TYP. SEE A404 FOR DETAIL

NOTE:

1. UNLESS INDICATED OTHERWISE, DIMENSIONS ARE TO FACE OF FRAMING
2. SEE DETAILS '18-20/A304' FOR ENERGY EFFICIENT FRAMING DETAILS
3. PROVIDE MINERAL WOOL SOUND INSULATION IN WALLS, CEILING, + FLOOR OF THE FOLLOWING ROOMS (U.N.O.):

211 LAUNDRY CLOSET
207 OWNER'S BATH
206 HALL BATH
204 BATH #2

WALL TYPES

TYPICAL NEW EXTERIOR WALL: 2x6 WOOD STUDS 16" O.C., W/ INSULATION (SEE THERMAL ENVELOPE, SHEET "EC001" FOR INSULATION INFORMATION) W/ ½" OSB SHEATHING, CONTINUOUS AIR & WATER BARRIER, & SEE ELEVATIONS. INTERIOR FINISH TO BE ½" GYP. BD.

TYPICAL NON-BEARING INTERIOR PARTITION; 2x4 WOOD STUDS 16" O.C. W/ ½" GYP. BD. EACH SIDE, INCREASE WALL THICKNESS AS SHOWN TO ALIGN FINISHES WHERE SHOWN

GTM ARCHITECTS

7735 OLD GEORGETOWN ROAD
SUITE 700
BETHESDA, MD 20814
(240)333-2000
(240)333-2001 FAX
WWW.GTMARCHITECTS.COM

Seal

STATE OF MARYLAND — KEVIN FOLEY — 25243 — ARCHITECT

I certify that these documents were prepared or approved by me, and that I am a duly licensed architect under the laws of the State of Maryland, license number 5886, Expiration Date: 12/06/2022.

Consultant

Project

25 High Street
LOT 1

25 HIGH STREET, BROOKEVILLE, MD 20833

Owner

Developer

PERMIT SET	4-11-2022
Issue Description	*Date*

GTM Project No.	18.0320
Checked By	GTM
Drawn By	NW/KF
Scale	AS NOTED

Sheet Title

SECOND FLOOR PLAN

Sheet No.

A102

COPYRIGHT, 2019 GTM ARCHITECTS, INC.

FILE NAME:

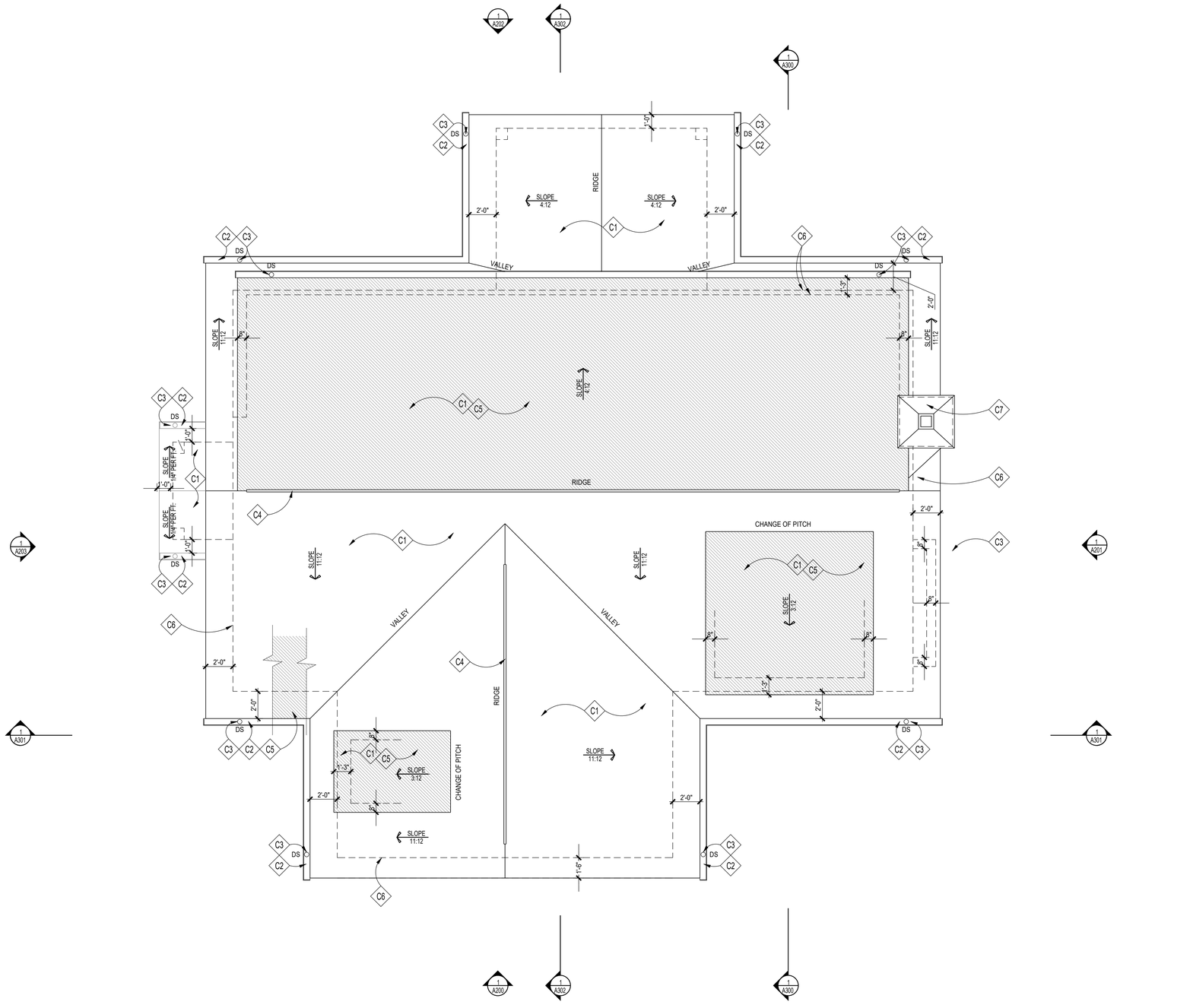

1 ROOF PLAN
SCALE: 1/4"=1'=0

PLAN NORTH

ROOFING NOTES

- C1 CEDAR ROOF SHINGLES, COLOR AND STYLE T.B.S.
- C2 PTD. ALUM. K-SYLE GUTTER T.B.S., TYP.
- C3 DOWNSPOUT T.B.S., TYP.
- C4 RIDGE/HIP VENTS BY COR-A-VENT OR APP'D EQUAL ELIMINATE WITH THE USE OF FOAM INSULATION
- C5 SEE NOTE #1 UNDER GENERAL ROOFING NOTES, TYP.
- C6 DASHED LINE INDICATES OUTSIDE OF STUD FRAME WALL BELOW
- C7 BLACK GALVANIZED STEEL FLUE CHIMNEY CAP BY HOME SAVER (SINGLE FLUE) OR APPROVED EQUAL W/ FLAT SEAM METAL CAP, COLOR T.B.S.

GENERAL ROOFING NOTES

1. PROVIDE SELF-ADHERING, 40 MIL ICE AND WATER GUARD UNDERLAYMENT UNDER SHINGLES AT ALL VALLEYS AND FROM LOWEST EDGE OF ROOF SURFACES TO A POINT AT LEAST 24" INSIDE THE EXTERIOR WALL LINE, AND ON ALL AREAS WITH A SLOPE LESS THAN 4:12.
2. SEE FRAMING PLAN FOR OVERBUILD AREAS
3. DOTTED LINE INDICATES LINE OF BUILDING BELOW

GTM ARCHITECTS

7735 OLD GEORGETOWN ROAD
SUITE 700
BETHESDA, MD 20814
(240)333-2000
(240)333-2001 FAX
WWW.GTMARCHITECTS.COM

Seal

I certify that these documents were prepared or approved by me, and that I am a duly licensed architect under the laws of the State of Maryland, license number 8385. Expiration Date: 12-06-2022

Consultant

Project
25 High Street
LOT 1
25 HIGH STREET, BROOKEVILLE, MD 20833

Owner

Developer

PERMIT SET	4-11-2022
Issue Description	Date

GTM Project No.	18.0320
Checked By	GTM
Drawn By	NW/KF
Scale	AS NOTED

Sheet Title
ROOF PLAN

Sheet No.
A103

COPYRIGHT, 2019 GTM ARCHITECTS, INC.

FILE NAME:

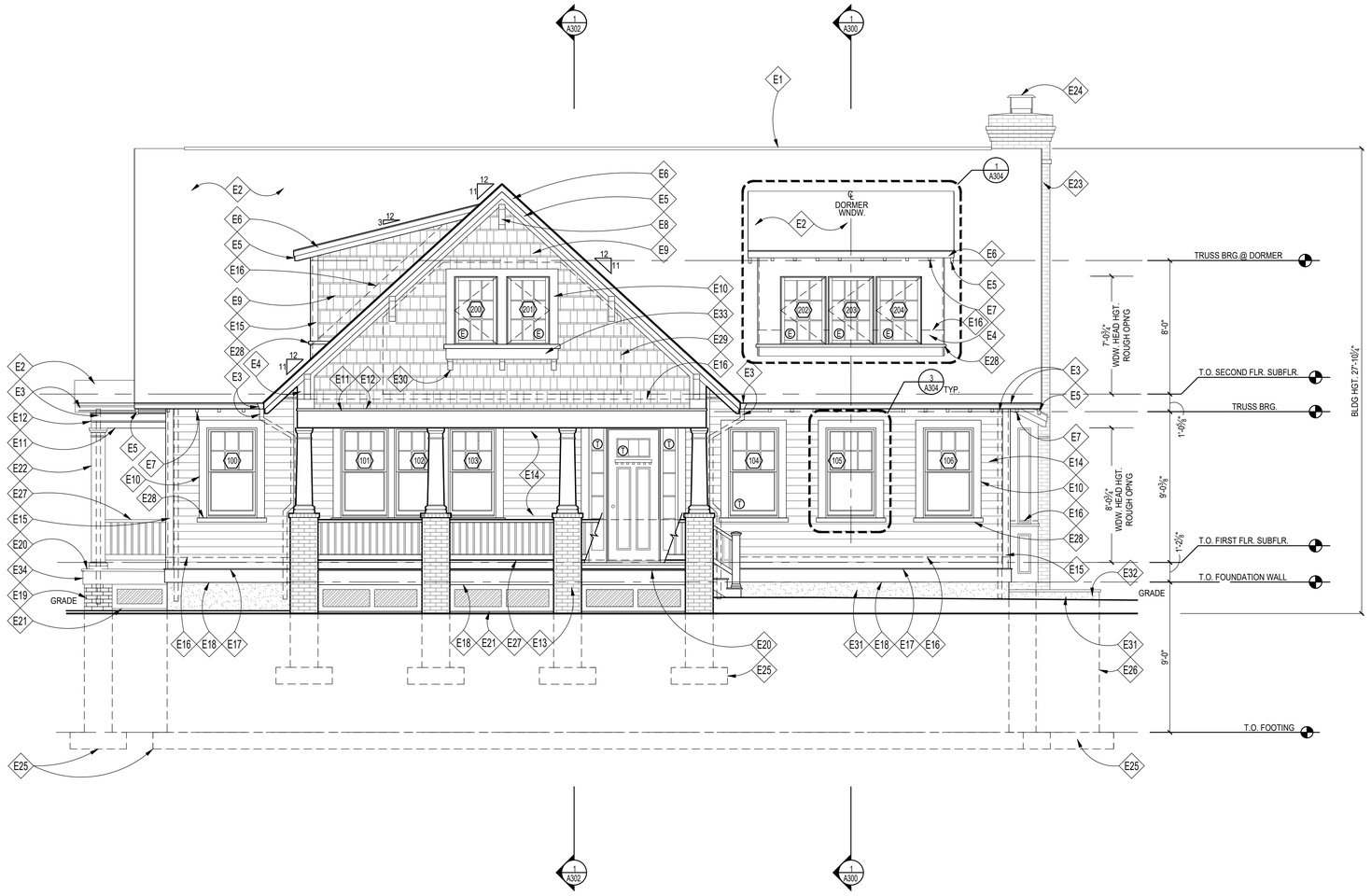

1 FRONT ELEVATION

Scale: 1/4"=1'-0"

ELEVATION NOTES

E1	RIDGE VENTS BY COR-A-VENT OR APPROVED EQUAL, TYP.; OMIT IF USING SPRAY FOAM INSULATION, SEE DETAIL '8/A303'
E2	ROOF SHINGLES; T.B.S., SEE ROOF PLAN
E3	PTD. ALUM. K-STYLE GUTTER & DOWNSPOUTS
E4	PTD. 5/4X WD. TRIM; CUT TO FIT @ FRONT OF DORMERS
E5	PTD. 2X8 WOOD BARGEBOARD
E6	PTD. 1X4 WOOD RAKE/FASCIA
E7	PTD. 2X6 WOOD RAFTER TAILS
E8	WD. BRACKET, TIMBER BUILD 17T1 OR EQ.; NOTCH INTO BOTTOM OF BARGEBOARD
E9	PTD/STD. CEDAR SHINGLE SIDINGS W/ 6" REVEAL
E10	PTD. 5/4X6 WOOD HEAD & JAMB TRIM
E11	PTD. 5/4X12 WOOD FRIEZE BD ALIGN W/ TOP OF WINDOWS/DOORS AND PORCH COLUMNS
E12	PTD. 1X2 WOOD TRIM
E13	PTD. CRAFTSMAN 10"X10" SQ. TAPERED COLUMN SURROUND W/ NECK MOULD, TUSCAN CAP & BASE ON BRICK PIERS
E14	PTD. HARDIEPLANK LAP SIDING, 5" EXPOSURE
E15	PTD. 5/4x6 WD. CORNERBOARD
E16	CONCEALED FLASHING & COUNTER FLASHING @ ALL VERTICAL TRANSITIONS, TYP. EXTEND MIN. 8" BEHIND SIDING. COLOR T.B.S.
E17	PTD. SLOPED 1X WOOD DRIP CAP, SEE 13/A303 FOR DETAIL
E18	PTD. 5/4 x 10 WOOD TRIMBAND
E19	BRICK VENEER, TO BE SELECTED
E20	SLOPED T&G PORCH, T.B.S. W/ STAIRS TO GRADE; PTD WOOD RISERS & TREADS, F.V. RISE/RUN
E21	PTD. LATTICE PANEL OVER 2X4 FRAME; W/ 1X4 STOPS
E22	PTD. 10" SQ. COLUMN W/ NECK MOULD, TUSCAN CAP & BASE
E23	BRICK VENEER CHIMNEY
E24	BLACK GALVANIZED STEEL FLUE CHIMNEY CAP BY HOME SAVER (SINGLE FLUE) OR APPROVED EQUAL W/ FLAT SEAM METAL CAP, COLOR T.B.S.
E25	DASHED LINE INDICATES FOOTING/ PIERS BELOW GRADE
E26	EGRESS WINDOW WELL
E27	PTD. 36"H. WOOD RAILING PER IRC 2018
E28	PTD. 2" HISTORIC SILL
E29	DASHED LINE INDICATES ROOM PROFILE BEYOND
E30	WD. CORBEL, TIMBER BUILD 22T8 OR EQ.
E31	PARGED & PTD. CONC. FOUNDATION WALL WHERE EXPOSED
E32	SLOPED FLAGSTONE CAP OVER CONC. FOUNDATION WALL
E33	PTD. WD. WINDOW PLANTER BOX; T.B.S. SEE 14/A303 FOR DETAIL
E34	PTD. 5/4 x 12 WOOD TRIMBAND

NOTE:

1. VERIFY ALL EXTERIOR RISER & TREAD DIMENSIONS IN FIELD
2. ALL EXTERIOR WOOD TRIM TO BE TREATED FOR PROTECTION AGAINST MOISTURE, ROT, FUNGAL ATTACK & INSECTS, WINDSOR-ONE+, LIFESPAN OR EQ.
3. (T) = TEMPERED GLASS
   (E) = EGRESS

GTM ARCHITECTS

7735 OLD GEORGETOWN ROAD
SUITE 700
BETHESDA, MD 20814
(240)333-2000
(240)333-2001 FAX
WWW.GTMARCHITECTS.COM

Seal

STATE OF MARYLAND — JAMES G. TRUMBO — ARCHITECT

I certify that these documents were prepared or approved by me, and that I am a duly licensed architect under the laws of the State of Maryland. License number 6535, Expiration Date: 12-06-2022

Consultant

Project

25 High Street LOT 1

25 HIGH STREET, BROOKEVILLE, MD 20833

Owner

Developer

PERMIT SET	4-11-2022

Issue Description	*Date*

GTM Project No.	18.0320
Checked By	GTM
Drawn By	NW/KF
Scale	AS NOTED

Sheet Title

FRONT ELEVATION

Sheet No.

A200

COPYRIGHT, 2019 GTM ARCHITECTS, INC.

FILE NAME:

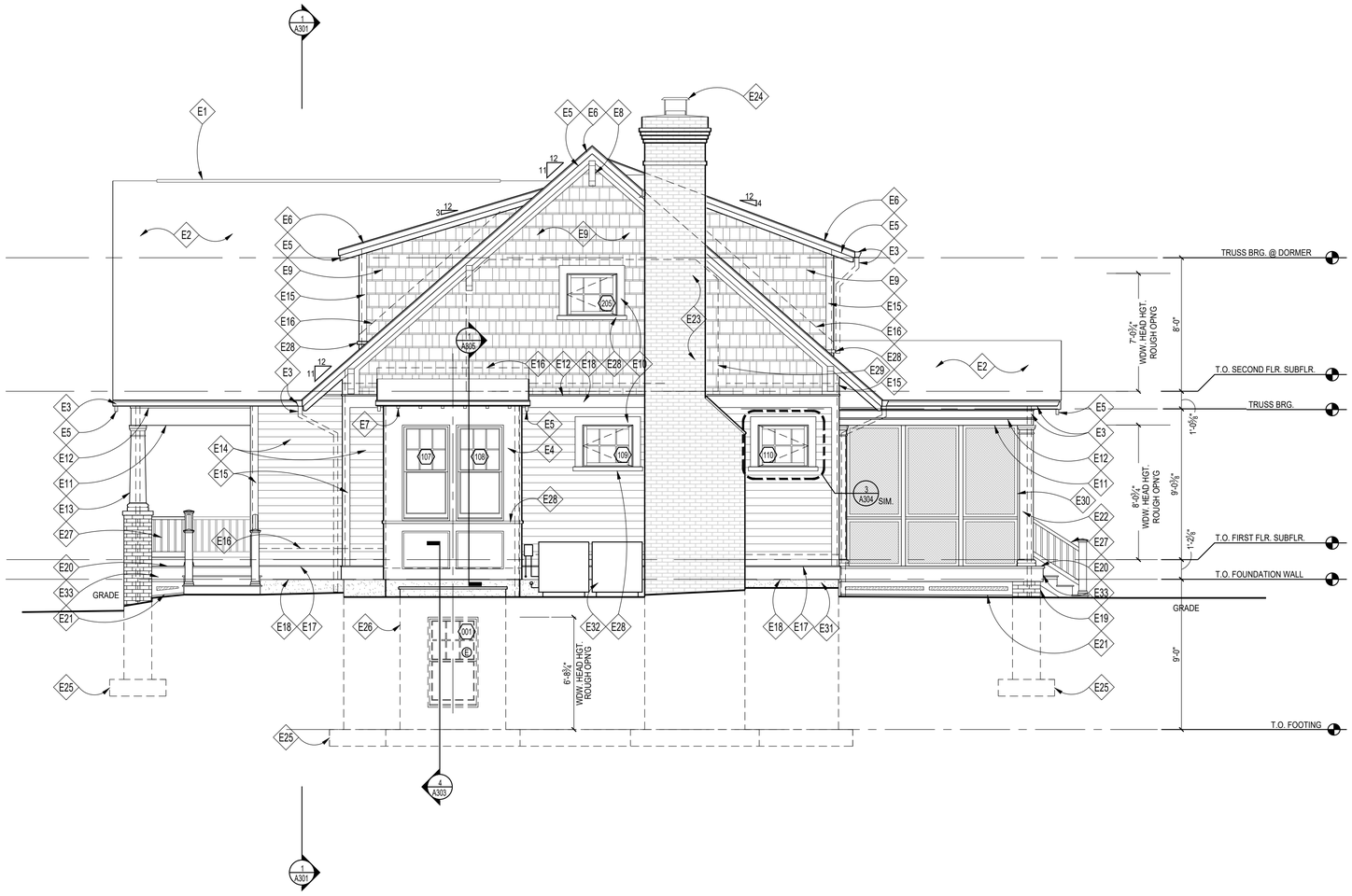

1 RIGHT SIDE ELEVATION
Scale: 1/4"=1'-0"

ELEVATION NOTES

E1	RIDGE VENTS BY COR-A-VENT OR APPROVED EQUAL, TYP.; OMIT IF USING SPRAY FOAM INSULATION, SEE DETAIL '8/A303'
E2	ROOF SHINGLES; T.B.S., SEE ROOF PLAN
E3	PTD. ALUM. K-STYLE GUTTER & DOWNSPOUTS
E4	PTD. 5/4X WD. TRIM CUT TO FIT
E5	PTD. 2X8 WOOD BARGEBOARD
E6	PTD. 1X4 WOOD RAKE/FASCIA
E7	PTD. 2X6 WOOD RAFTER TAILS
E8	WD. BRACKET, TIMBER BUILD 17T1 OR EQ.; NOTCH INTO BOTTOM OF BARGEBOARD
E9	PTD. STD. CEDAR SHINGLE SIDINGS W/ 6" REVEAL
E10	PTD. 5/4X6 WOOD HEAD & JAMB TRIM
E11	PTD. 5/4X12 WOOD FRIEZE BD ALIGN W/ TOP OF WINDOWS/DOORS AND PORCH COLUMNS
E12	PTD. 1X2 WOOD TRIM
E13	PTD. CRAFTSMAN 10"X10" SQ. TAPERED COLUMN SURROUND W/ NECK MOULD, TUSCAN CAP & BASE ON BRICK PIERS
E14	PTD. HARDIEPLANK LAP SIDING, 5" EXPOSURE
E15	PTD. 5/4x6 WD. CORNERBOARD
E16	CONCEALED FLASHING & COUNTER FLASHING @ ALL VERTICAL TRANSITIONS, TYP. EXTEND MIN. 8" BEHIND SIDING. COLOR T.B.S.
E17	PTD. SLOPED 1X WOOD DRIP CAP, SEE 13/A303 FOR DETAIL
E18	PTD. 5/4 x 10 WOOD TRIMBAND
E19	BRICK VENEER, TO BE SELECTED
E20	SLOPED T&G PORCH, T.B.S. W/ STAIRS TO GRADE; PTD WOOD RISERS & TREADS, F.V. RISE/RUN
E21	PTD. LATTICE PANEL OVER 2X4 FRAME; W/ 1X4 STOPS
E22	PTD. 10" SQ. COLUMN W/ NECK MOULD, TUSCAN CAP & BASE
E23	BRICK VENEER CHIMNEY
E24	BLACK GALVANIZED STEEL FLUE CHIMNEY CAP BY HOME SAVER (SINGLE FLUE) OR APPROVED EQUAL W/ FLAT SEAM METAL CAP, COLOR T.B.S.
E25	DASHED LINE INDICATES FOOTING/ PIERS BELOW GRADE
E26	EGRESS WINDOW WELL
E27	PTD. 36"H. WOOD RAILING PER IRC 2018
E28	PTD. 2" HISTORIC SILL
E29	DASHED LINE INDICATES ROOM PROFILE BEYOND
E30	CUSTOM FIXED SCREENING, SEE SHEET A101
E31	PARGED & PTD. CONC. FOUNDATION WALL WHERE EXPOSED
E32	APPROXIMATE CONDENSER UNIT LOCATION GC TO FIELD VERIFY
E33	PTD. 5/4 x 12 WOOD TRIMBAND

NOTE:

1. VERIFY ALL EXTERIOR RISER & TREAD DIMENSIONS IN FIELD
2. ALL EXTERIOR WOOD TRIM TO BE TREATED FOR PROTECTION AGAINST MOISTURE, ROT, FUNGAL ATTACK & INSECTS, WINDSOR-ONE+, LIFESPAN OR EQ.
3. Ⓣ = TEMPERED GLASS
   Ⓔ = EGRESS

GTM ARCHITECTS

7735 OLD GEORGETOWN ROAD
SUITE 700
BETHESDA, MD 20814
(240)333-2000
(240)333-2001 FAX
WWW.GTMARCHITECTS.COM

Seal

I certify that these documents were prepared or approved by me, and that I am a duly licensed architect under the laws of the State of Maryland, license number 8385, Expiration Date: 12-06-2022.

Consultant

Project
25 High Street
LOT 1
25 HIGH STREET, BROOKEVILLE, MD 20833

Owner

Developer

PERMIT SET	4-11-2022
Issue Description	Date

GTM Project No.	18.0320
Checked By	GTM
Drawn By	NW/KF
Scale	AS NOTED

Sheet Title
RIGHT SIDE ELEVATION

Sheet No.
A201

COPYRIGHT, 2019 GTM ARCHITECTS, INC.

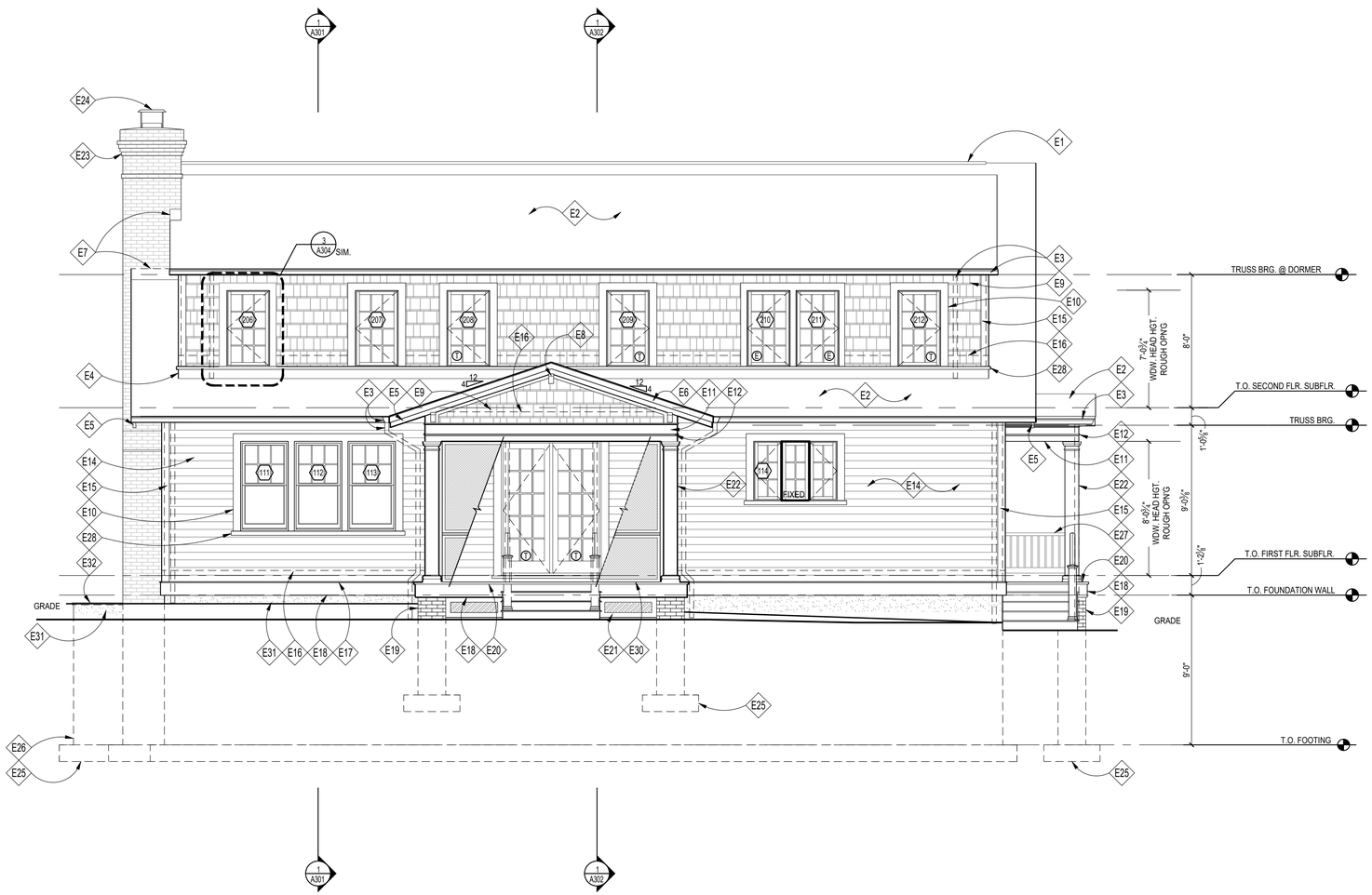

1 REAR ELEVATION
Scale: 1/4"=1'-0"

ELEVATION NOTES

E1	RIDGE VENTS BY COR-A-VENT OR APPROVED EQUAL, TYP.; OMIT IF USING SPRAY FOAM INSULATION, SEE DETAIL '8/A303'
E2	ROOF SHINGLES; T.B.S., SEE ROOF PLAN
E3	PTD. ALUM. K-STYLE GUTTER & DOWNSPOUTS
E4	PTD. 5/4X WD. TRIM CUT TO FIT
E5	PTD. 2X8 WOOD BARGEBOARD
E6	PTD. 1X4 WOOD RAKE/FASCIA
E7	COPPER FLASHING @ VERTICAL TRANSITION; EXTEND MIN. 8" UP FACE OF CHIMNEY
E8	WD. CORBEL, TIMBER BUILD 22T6 OR EQ.
E9	PTD. STD. CEDAR SHINGLE SIDINGS W/ 6" REVEAL
E10	PTD. 5/4X6 WOOD HEAD & JAMB TRIM
E11	PTD. 5/4X12 WOOD FRIEZE BD ALIGN W/ TOP OF WINDOWS/DOORS AND PORCH COLUMNS
E12	PTD. 1X2 WOOD TRIM
E13	NOT USED
E14	PTD. HARDIEPLANK LAP SIDING, 5" EXPOSURE
E15	PTD. 5/4x6 WD. CORNERBOARD
E16	CONCEALED FLASHING & COUNTER FLASHING @ ALL VERTICAL TRANSITIONS, TYP. EXTEND MIN. 8" BEHIND SIDING. COLOR T.B.S.
E17	PTD. SLOPED 1X WOOD DRIP CAP, SEE 13/A303 FOR DETAIL
E18	PTD. 5/4 x 10 WOOD TRIMBAND
E19	BRICK VENEER, TO BE SELECTED
E20	SLOPED T&G PORCH, T.B.S. W/ STAIRS TO GRADE, COMPOSITE WOOD RISERS & TREADS, F.V. RISE/RUN
E21	SLOPED T&G PORCH, T.B.S. W/ STAIRS TO GRADE; PTD WOOD RISERS & TREADS, F.V. RISE/RUN
E22	PTD. 10" SQ. COLUMN W/ NECK MOULD, TUSCAN CAP & BASE
E23	BRICK VENEER CHIMNEY
E24	BLACK GALVANIZED STEEL FLUE CHIMNEY CAP BY HOME SAVER (SINGLE FLUE) OR APPROVED EQUAL W/ FLAT SEAM METAL CAP, COLOR T.B.S.
E25	DASHED LINE INDICATES FOOTING/ PIERS BELOW GRADE
E26	EGRESS WINDOW WELL
E27	PTD. 36"H. WOOD RAILING PER IRC 2018
E28	PTD. 2" HISTORIC SILL
E29	NOT USED
E30	CUSTOM FIXED SCREENING, SEE SHEET A101
E31	PARGED & PTD. CONC. FOUNDATION WALL WHERE EXPOSED
E32	SLOPED FLAGSTONE CAP OVER CONC. FOUNDATION WALL

NOTE:

1. VERIFY ALL EXTERIOR RISER & TREAD DIMENSIONS IN FIELD
2. ALL EXTERIOR WOOD TRIM TO BE TREATED FOR PROTECTION AGAINST MOISTURE, ROT, FUNGAL ATTACK & INSECTS, WINDSOR-ONE+, LIFESPAN OR EQ.
3. (T) = TEMPERED GLASS
   (E) = EGRESS

GTM ARCHITECTS

7735 OLD GEORGETOWN ROAD
SUITE 700
BETHESDA, MD 20814
(240)333-2000
(240)333-2001 FAX
WWW.GTMARCHITECTS.COM

Seal

STATE OF MARYLAND · JAMES A. SCHMIDT · 7385 · ARCHITECT

I certify that these documents were prepared or approved by me, and that I am a duly licensed architect under the laws of the State of Maryland. License number 7385, Expiration Date: 12-06-2022

Consultant

Project

25 High Street
LOT 1

25 HIGH STREET, BROOKEVILLE, MD 20833

Owner

Developer

PERMIT SET	4-11-2022

Issue Description	*Date*

GTM Project No.	18.0320
Checked By	GTM
Drawn By	NW/KF
Scale	AS NOTED

Sheet Title

REAR ELEVATION

Sheet No.

A202

COPYRIGHT, 2019 GTM ARCHITECTS, INC.

FILE NAME:

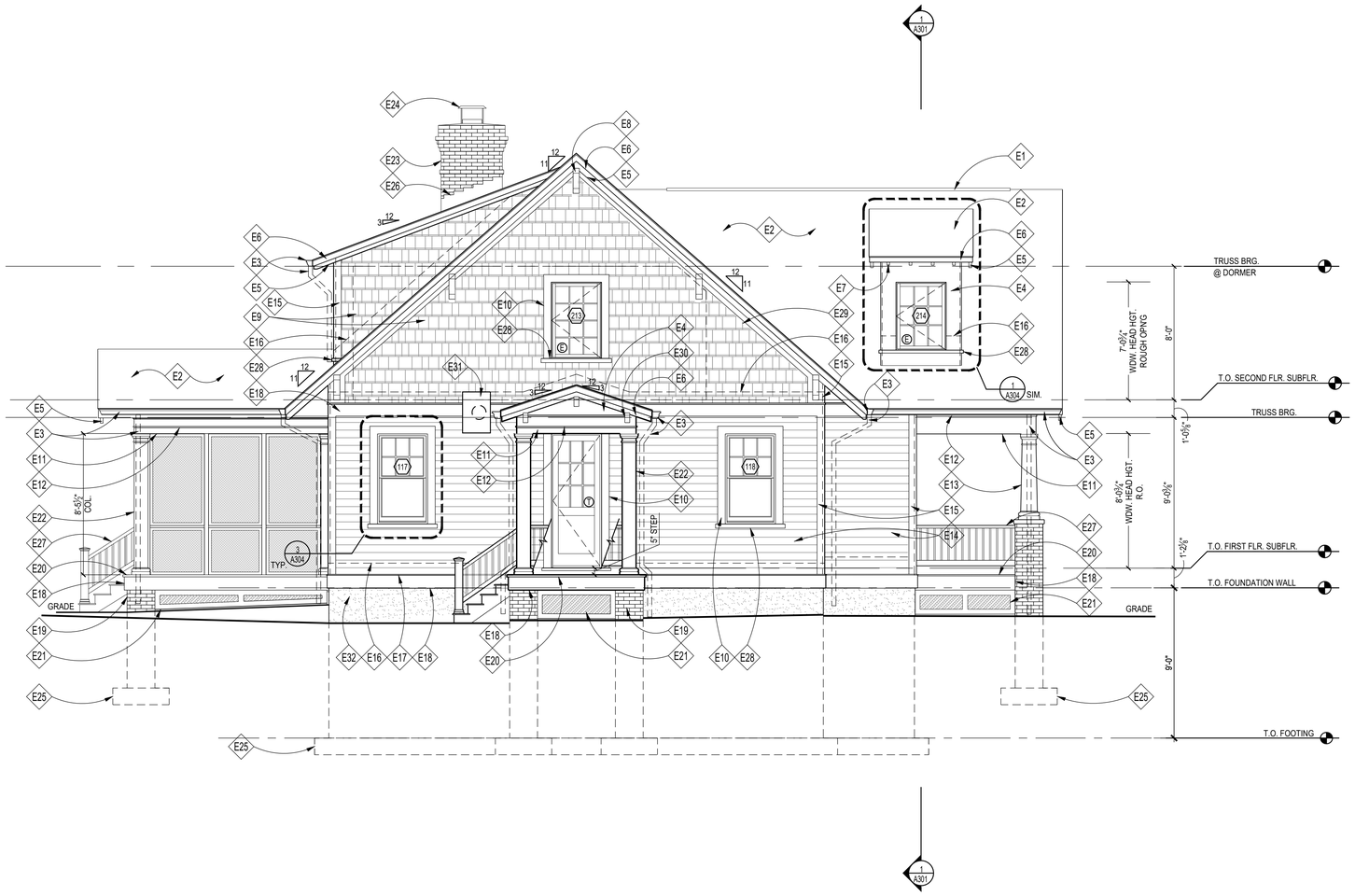

1 LEFT SIDE ELEVATION
Scale: 1/4"=1'-0"

ELEVATION NOTES

E1	RIDGE VENTS BY COR-A-VENT OR APPROVED EQUAL, TYP.; OMIT IF USING SPRAY FOAM INSULATION, SEE DETAIL '8/A303'
E2	ROOF SHINGLES; T.B.S., SEE ROOF PLAN
E3	PTD. ALUM. K-STYLE GUTTER & DOWNSPOUTS
E4	PTD. 5/4X WD. TRIM; CUT TO FIT
E5	PTD. 2X8 WOOD BARGEBOARD
E6	PTD. 1X4 WOOD RAKE/FASCIA
E7	PTD. 2X6 WOOD RAFTER TAILS
E8	WD. BRACKET, TIMBER BUILD 17T1 OR EQ.; NOTCH INTO BOTTOM OF BARGEBOARD
E9	PTD. STD. CEDAR SHINGLE SIDINGS W/ 6" REVEAL
E10	PTD. 5/4X6 WOOD HEAD & JAMB TRIM
E11	PTD. 5/4X12 WOOD FRIEZE BD ALIGN W/ TOP OF WINDOWS/DOORS AND PORCH COLUMNS
E12	PTD. 1X2 WOOD TRIM
E13	PTD. CRAFTSMAN 10"X10" SQ. TAPERED COLUMN SURROUND W/ NECK MOULD, TUSCAN CAP & BASE ON BRICK PIERS
E14	PTD. HARDIEPLANK LAP SIDING, 5" EXPOSURE
E15	PTD. 5/4x6 WD. CORNERBOARD
E16	CONCEALED FLASHING & COUNTER FLASHING @ ALL VERTICAL TRANSITIONS, TYP. EXTEND MIN. 8" BEHIND SIDING. COLOR T.B.S.
E17	PTD. SLOPED 1X WOOD DRIP CAP, SEE 13/A303 FOR DETAIL
E18	PTD. 5/4x WOOD TRIMBAND
E19	BRICK VENEER, TO BE SELECTED
E20	SLOPED T&G PORCH, T.B.S. W/ STAIRS TO GRADE; PTD WOOD RISERS & TREADS, F.V. RISE/RUN
E21	PTD. LATTICE PANEL OVER 2X4 FRAME; W/ 1X4 STOPS
E22	PTD. 10" SQ. COLUMN W/ NECK MOULD, TUSCAN CAP & BASE
E23	BRICK VENEER CHIMNEY
E24	BLACK GALVANIZED STEEL FLUE CHIMNEY CAP BY HOME SAVER (SINGLE FLUE) OR APPROVED EQUAL W/ FLAT SEAM METAL CAP, COLOR T.B.S.
E25	DASHED LINE INDICATES FOOTING/ PIERS BELOW GRADE
E26	COPPER FLASHING @ VERTICAL TRANSITION; EXTEND MIN. 8" UP FACE OF CHIMNEY
E27	PTD. 36"H. WOOD RAILING PER IRC 2018
E28	PTD. 2" HISTORIC SILL
E29	DASHED LINE INDICATES ROOM PROFILE BEYOND
E30	WD. CORBEL, TIMBER BUILD 22T6 OR EQ.
E31	PROPOSED LOCATION FOR RANGE HOOD EXHAUST
E32	PARGED & PTD. CONC. FOUNDATION WALL WHERE EXPOSED

NOTE:

1. VERIFY ALL EXTERIOR RISER & TREAD DIMENSIONS IN FIELD
2. ALL EXTERIOR WOOD TRIM TO BE TREATED FOR PROTECTION AGAINST MOISTURE, ROT, FUNGAL ATTACK & INSECTS, WINDSOR-ONE+, LIFESPAN OR EQ.
3. Ⓣ = TEMPERED GLASS
   Ⓔ = EGRESS

GTM ARCHITECTS

7735 OLD GEORGETOWN ROAD
SUITE 700
BETHESDA, MD 20814
(240)333-2000
(240)333-2001 FAX
WWW.GTMARCHITECTS.COM

Seal

I certify that these documents were prepared or approved by me, and that I am a duly licensed architect under the laws of the State of Maryland, license number 8385, Expiration Date: 12-06-2022.

Consultant

Project

25 High Street
LOT 1

25 HIGH STREET, BROOKEVILLE, MD 20833

Owner

Developer

PERMIT SET	4-11-2022
Issue Description	Date

GTM Project No.	18.0320
Checked By	GTM
Drawn By	NW/KF
Scale	AS NOTED

Sheet Title

LEFT SIDE ELEVATION

Sheet No.

A203

COPYRIGHT, 2019 GTM ARCHITECTS, INC.

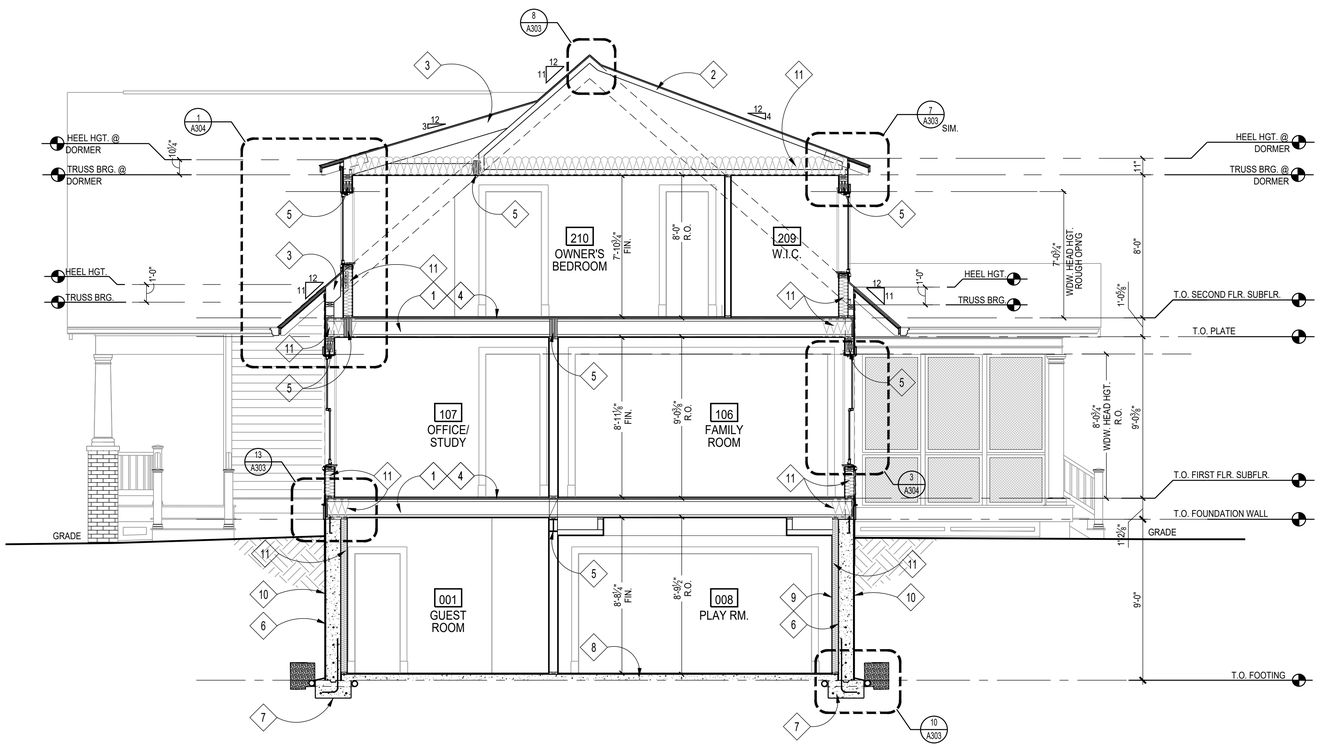

1 BUILDING SECTION
Scale: 1/4"=1'-0"

CONSTRUCTION NOTES

1. TJI FLOOR JOISTS; SEE FRAMING PLANS
2. ROOF TRUSSES BY TRUSS MANUFACTURER; SEE FRAMING PLANS
3. ROOF RAFTER; SEE FRAMING PLANS
4. 3/4" T&G PLYWD. SUBFLOOR; GLUED & SCREWED
5. BEAM/ LINTEL/ HEADER; SEE FRAMING PLANS
6. CONCRETE FOUNDATION WALL; SEE FOUNDATION PLAN
7. FOOTING; SEE FOUNDATION PLAN
8. REINF. CONC. SLAB; SEE FOUNDATION PLAN
9. FUR OUT BASEMENT WALLS W/ 2x4's @ 16" O.C. & R-13 BATT INSULATION, TYP.
10. DRAINAGE BOARD & WATERPROOFING BELOW GRADE
11. INSULATION, SEE SHEET EC001 FOR DETAILS

GTM ARCHITECTS

7735 OLD GEORGETOWN ROAD
SUITE 700
BETHESDA, MD 20814
(240)333-2000
(240)333-2001 FAX
WWW.GTMARCHITECTS.COM

Seal

I certify that these documents were prepared or approved by me, and that I am a duly licensed architect under the laws of the State of Maryland, license number 8385, Expiration Date: 12-06-2022.

Consultant

Project
25 High Street
LOT 1
25 HIGH STREET, BROOKEVILLE, MD 20833

Owner

Developer

Issue Description	Date
PERMIT SET	4-11-2022

GTM Project No.	18.0320
Checked By	GTM
Drawn By	NW/KF
Scale	AS NOTED

Sheet Title
BUILDING SECTION

Sheet No.
A300

COPYRIGHT, 2019 GTM ARCHITECTS, INC.

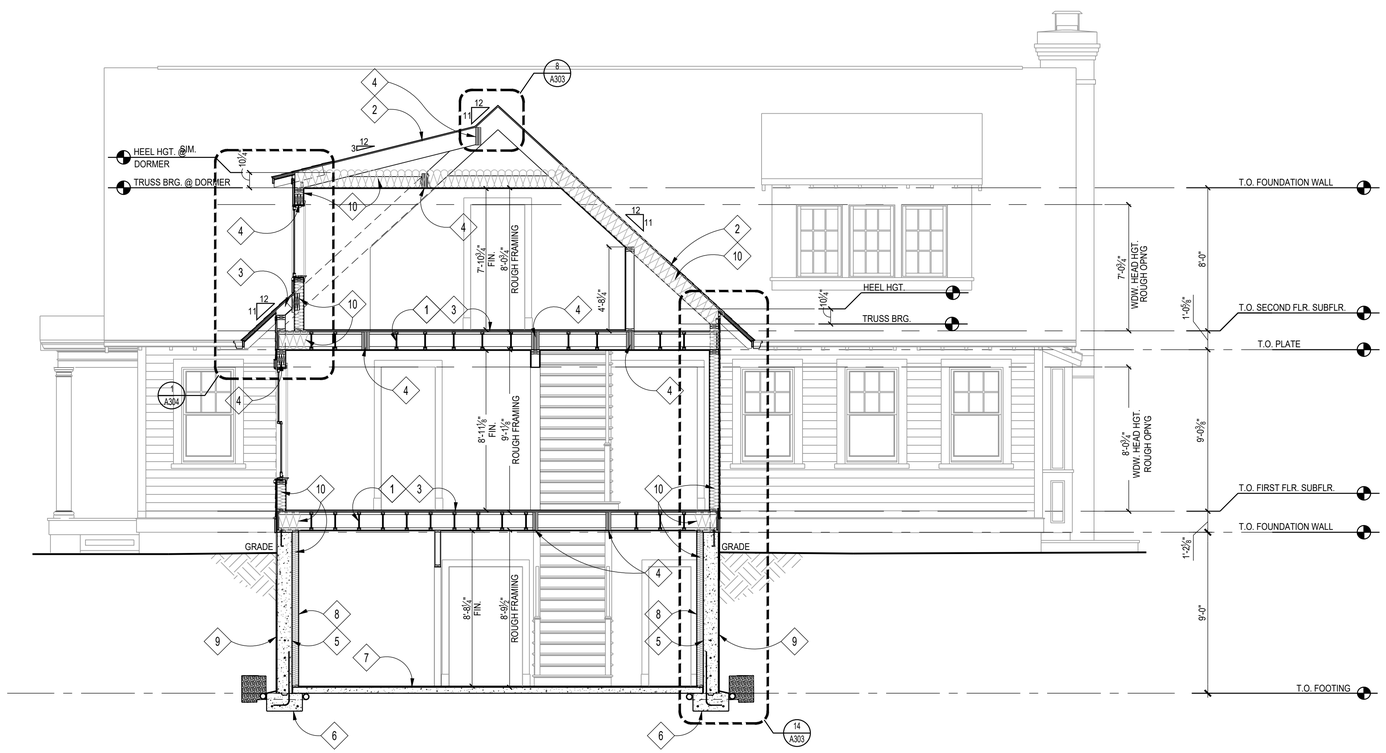

1 BUILDING SECTION
Scale: 1/4"=1'-0"

CONSTRUCTION NOTES

1. TJI FLOOR JOISTS; SEE FRAMING PLANS
2. ROOF RAFTER, SEE FRAMING PLANS
3. 3/4" T&G PLYWD. SUBFLOOR; GLUED & SCREWED
4. BEAM/ LINTEL/ HEADER; SEE FRAMING PLANS
5. CONCRETE FOUNDATION WALL; SEE FOUNDATION PLAN
6. FOOTING; SEE FOUNDATION PLAN
7. REINF. CONC. SLAB; SEE FOUNDATION PLAN
8. FUR OUT BASEMENT WALLS W/ 2x4's @ 16" O.C. & R-13 BATT INSULATION, TYP.
9. DRAINAGE BOARD AND WATERPROOFING
10. INSULATION, SEE SHEET EC001 FOR DETAILS

GTM ARCHITECTS

7735 OLD GEORGETOWN ROAD
SUITE 700
BETHESDA, MD 20814
(240)333-2000
(240)333-2001 FAX
WWW.GTMARCHITECTS.COM

Seal

I certify that these documents were prepared or approved by me, and that I am a duly licensed architect under the laws of the State of Maryland, license number 8385, Expiration Date: 12-06-2022.

Consultant

Project

25 High Street
LOT 1

25 HIGH STREET, BROOKEVILLE, MD 20833

Owner

Developer

PERMIT SET	4-11-2022
Issue Description	Date

GTM Project No.	18.0320
Checked By	GTM
Drawn By	NW/KF
Scale	AS NOTED

Sheet Title

BUILDING SECTION

Sheet No.

A301

COPYRIGHT, 2019 GTM ARCHITECTS, INC.

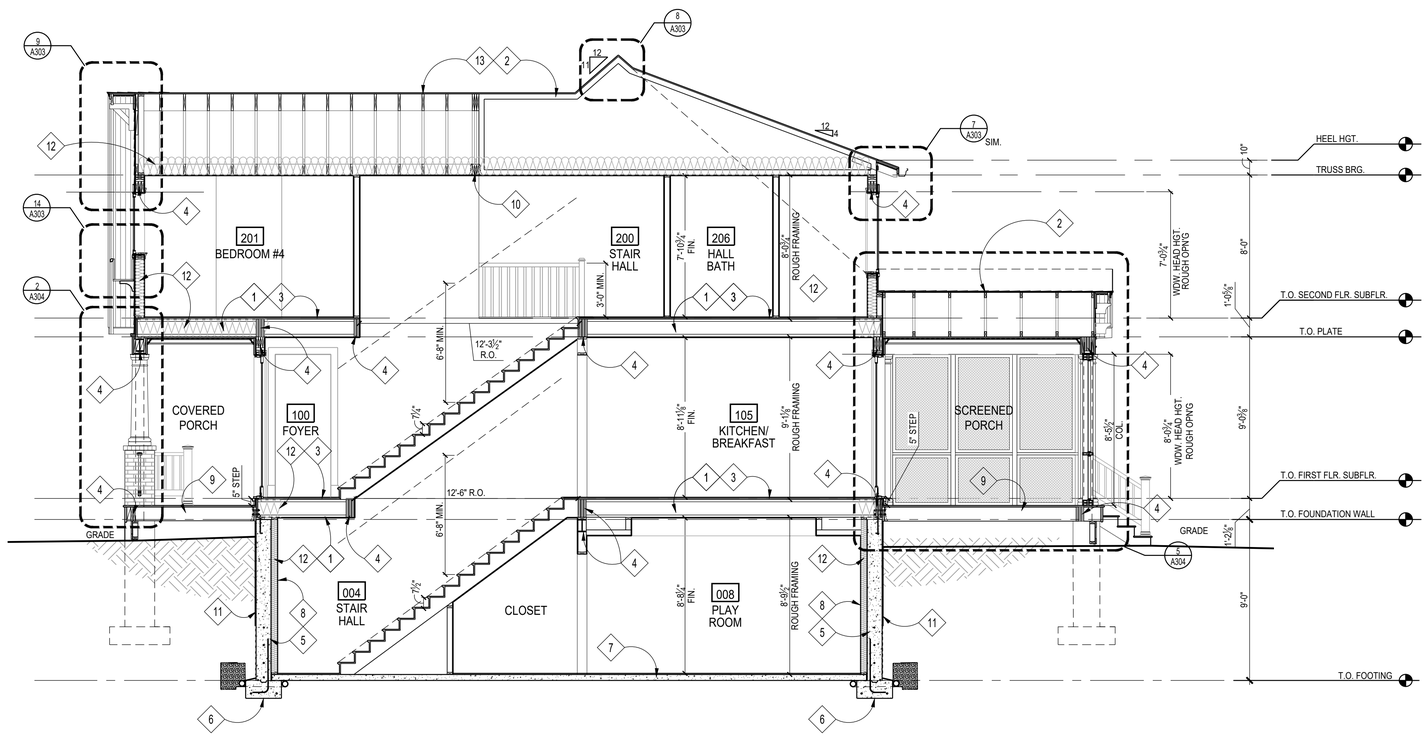

1 BUILDING SECTION
Scale: 1/4"=1'-0"

CONSTRUCTION NOTES

1. TJI FLOOR JOISTS; SEE FRAMING PLANS
2. ROOF TRUSSES BY TRUSS MANUFACTURER; SEE FRAMING PLANS
3. 3/4" T&G PLYWD. SUBFLOOR; GLUED & SCREWED
4. BEAM/ LINTEL/ HEADER; SEE FRAMING PLANS
5. CONCRETE FOUNDATION WALL; SEE FOUNDATION PLAN
6. FOOTING; SEE FOUNDATION PLAN
7. REINF. CONC. SLAB; SEE FOUNDATION PLAN
8. FUR OUT BASEMENT WALLS W/ 2x4's @ 16" O.C. & R-13 BATT INSULATION, TYP.
9. P.T. 2X DECK JOISTS, SEE FRAMING PLANS
10. GIRDER TRUSS BY TRUSS MANUFACTURER; SEE FRAMING PLANS
11. DRAINAGE BOARD AND WATERPROOFING
12. INSULATION, SEE SHEET EC001 FOR DETAILS
13. ROOF RAFTER, SEE FRAMING PLANS

GTM ARCHITECTS

7735 OLD GEORGETOWN ROAD
SUITE 700
BETHESDA, MD 20814
(240)333-2000
(240)333-2001 FAX
WWW.GTMARCHITECTS.COM

Seal

I certify that these documents were prepared or approved by me, and that I am a duly licensed architect under the laws of the State of Maryland, license number 8385. Expiration Date: 12-06-2022.

Consultant

Project
25 High Street
LOT 1
25 HIGH STREET, BROOKEVILLE, MD 20833

Owner

Developer

Issue Description	Date
PERMIT SET	4-11-2022

GTM Project No.	18.0320
Checked By	GTM
Drawn By	NW/KF
Scale	AS NOTED

Sheet Title
BUILDING SECTION

Sheet No.
A302

COPYRIGHT, 2019 GTM ARCHITECTS, INC.

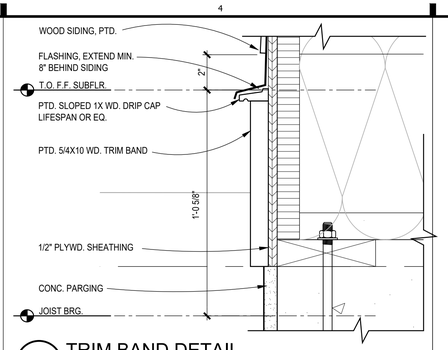

13 TRIM BAND DETAIL
SCALE: 3"=1'-0"

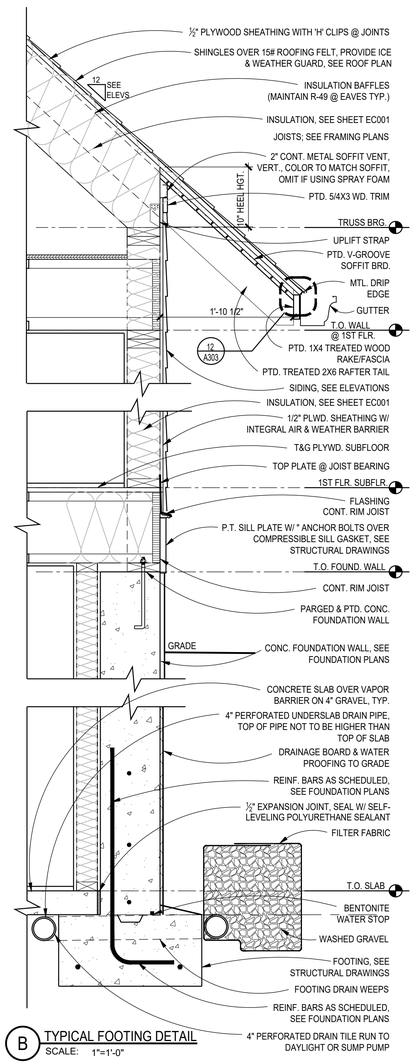

B TYPICAL FOOTING DETAIL
SCALE: 1"=1'-0"

6 GARAGE SILL DETAIL
SCALE: 1" = 1'-0"

10 NOT USED
SCALE:

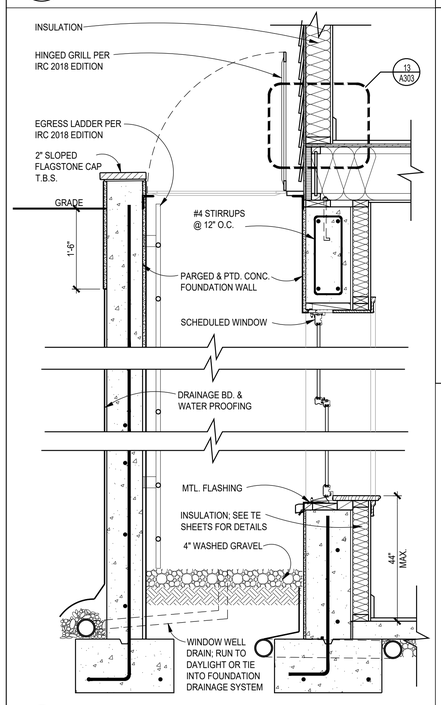

4 WINDOW WELL DETAIL, TYP.
SCALE: 3/4"=1'-0"

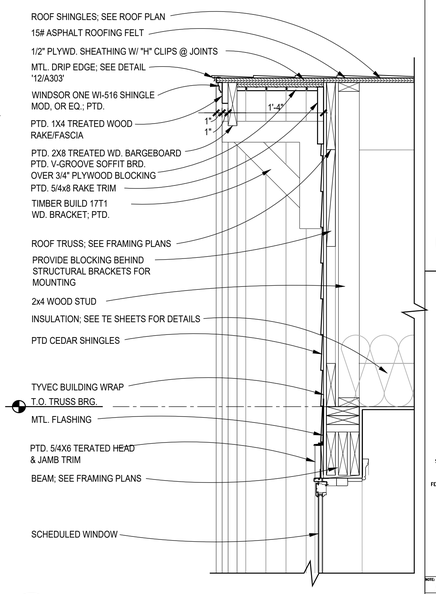

9 ROOF EAVE DETAIL
SCALE: 1 1/2" = 1'-0"

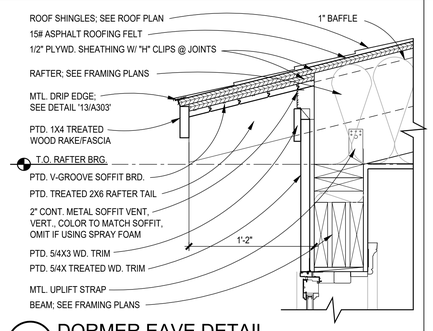

7 DORMER EAVE DETAIL
SCALE: 1 1/2" = 1'-0"

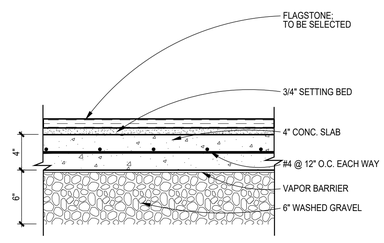

3 FLAGSTONE PATIO DETAIL
SCALE: 1 1/2" = 1'-0"

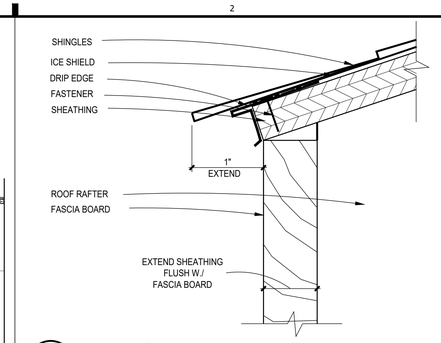

12 DRIP EDGE EAVE DETAIL
SCALE: 1"=1"

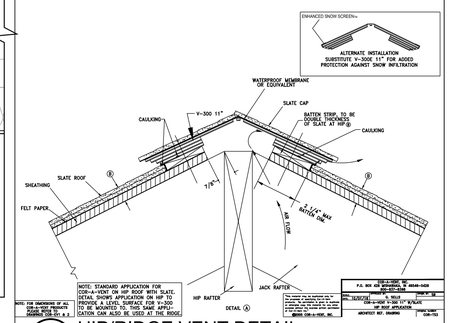

8 HIP/RIDGE VENT DETAIL
SCALE: N.T.S.

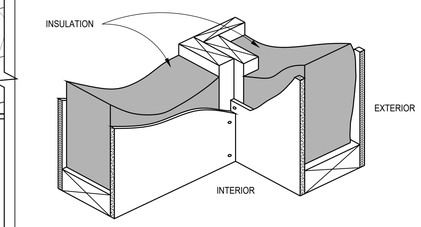

6 CORNER FRAMING DETAIL
SCALE: N.T.S.

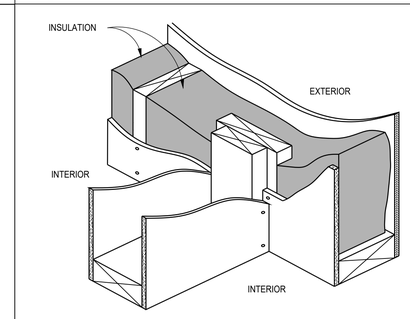

2 INTERSECTING WALL FRAMING
SCALE: N.T.S.

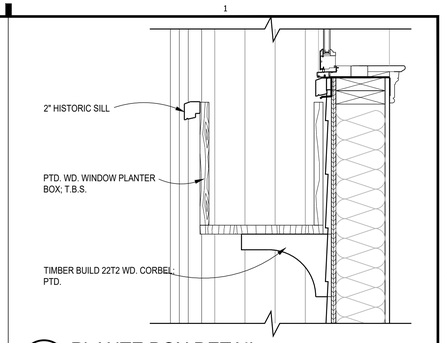

11 PLANTE BOX DETAIL
SCALE: 3"=1'-0"

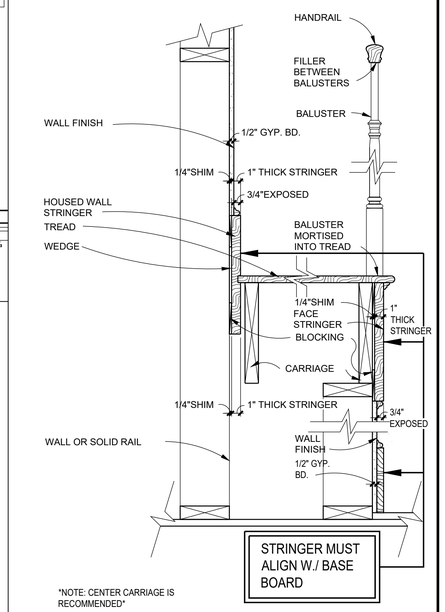

5 TYP. WOOD STAIR TRIM DETAIL
SCALE: 1 1/2"=1'-0"

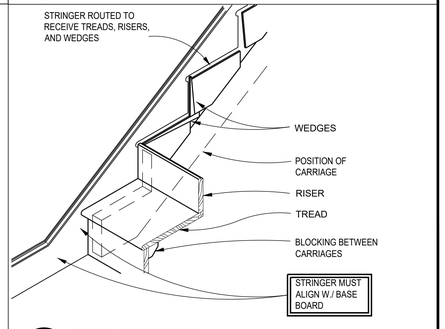

1 STAIR STRINGER
SCALE: 1"=1'-0"

GTM ARCHITECTS

7735 OLD GEORGETOWN ROAD
SUITE 700
BETHESDA, MD 20814
(240)333-2000
(240)333-2001 FAX
WWW.GTMARCHITECTS.COM

Seal

I certify that these documents were prepared or approved by me, and that I am a duly licensed architect under the laws of the State of Maryland. License No. 5305, Expiration Date: 12-06-2022

Consultant

Project

25 High Street LOT 1

25 HIGH STREET, BROOKEVILLE, MD 20833

Owner

Developer

PERMIT SET	4-11-2022
Issue Description	*Date*

GTM Project No.	18.0320
Checked By	GTM
Drawn By	NW/KF
Scale	AS NOTED

Sheet Title

DETAILS

Sheet No.

A303

COPYRIGHT, 2019 GTM ARCHITECTS, INC.

FILE NAME:

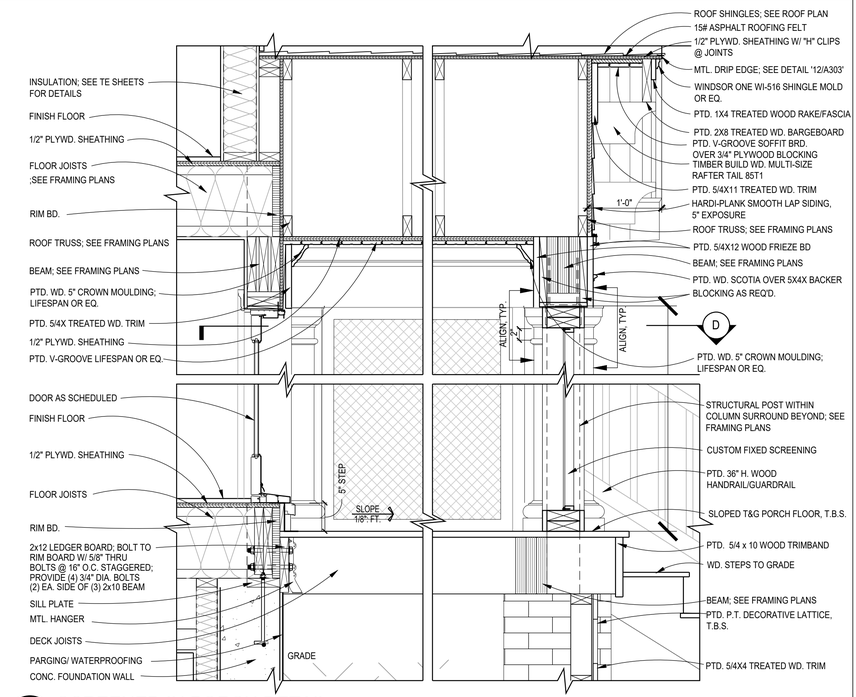

5 SCREENED IN PORCH DETAIL
SCALE: 1"=1'-0"

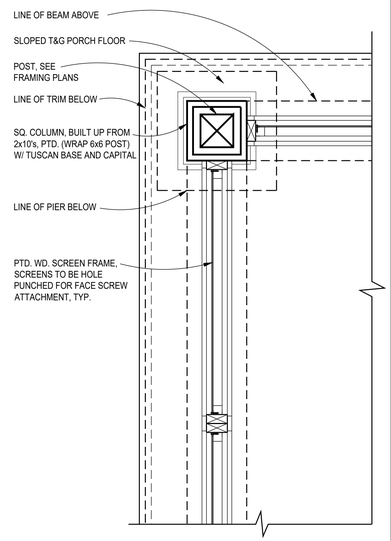

4 SCREENED IN PORCH PLAN DETAIL
SCALE: 1"=1'-0"

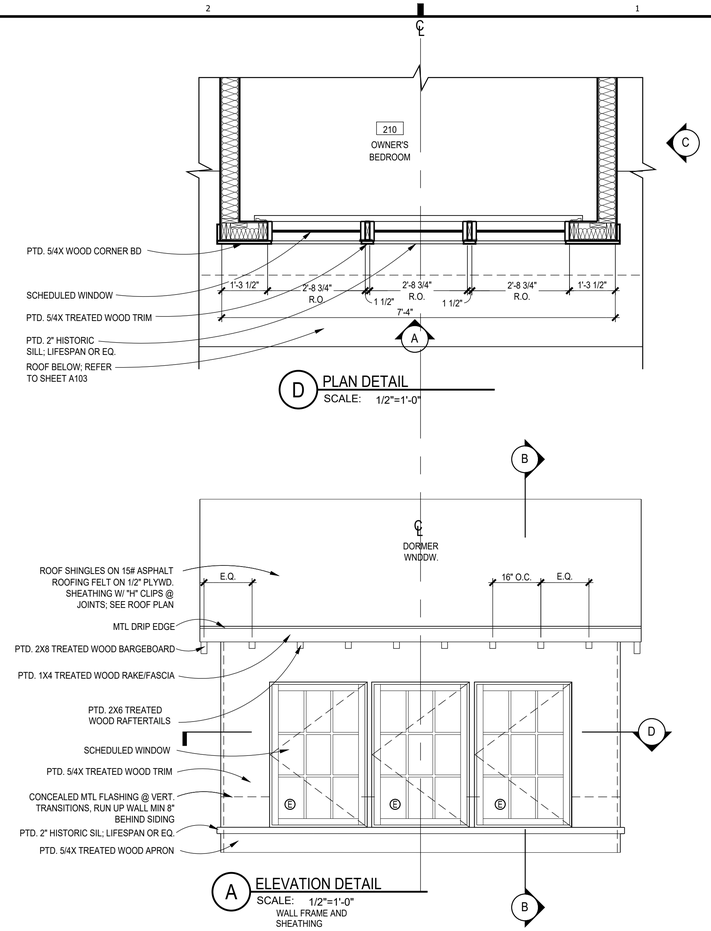

D PLAN DETAIL
SCALE: 1/2"=1'-0"

A ELEVATION DETAIL
SCALE: 1/2"=1'-0"
WALL FRAME AND SHEATHING

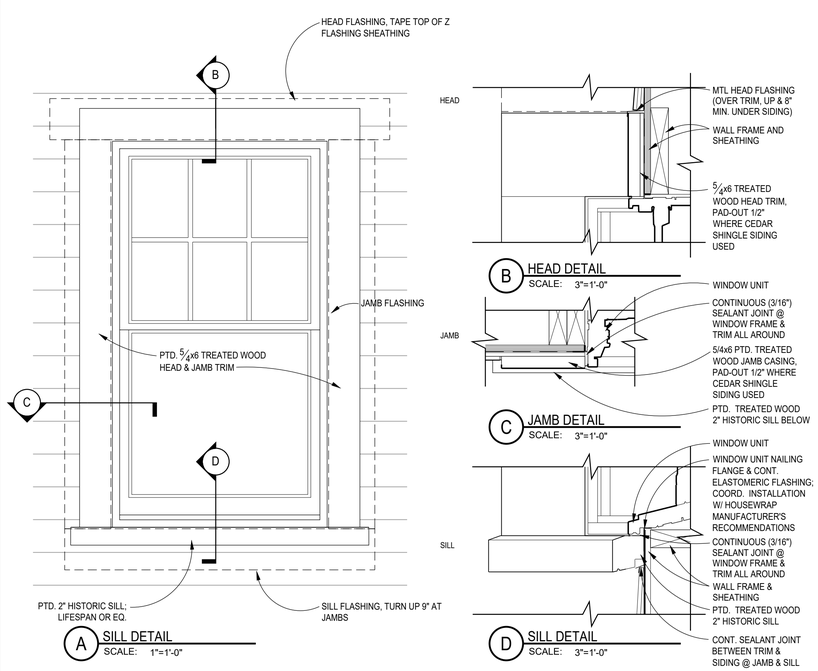

A SILL DETAIL
SCALE: 1"=1'-0"

B HEAD DETAIL
SCALE: 3"=1'-0"

C JAMB DETAIL
SCALE: 3"=1'-0"

D SILL DETAIL
SCALE: 3"=1'-0"

3 TYP. EXTERIOR WDW TRIM DETAILS
SCALE: 1"=1'-0"

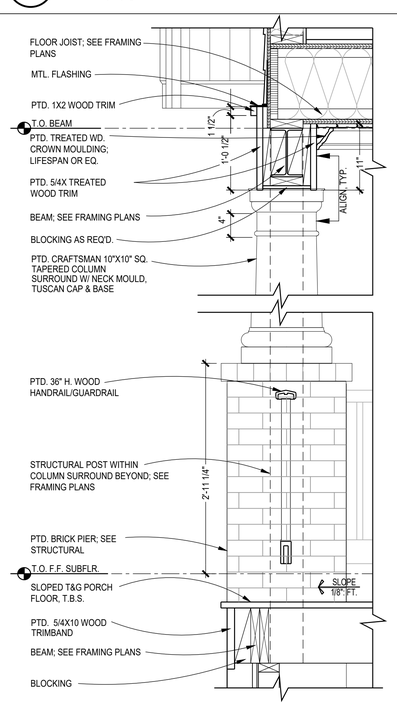

2 FRONT PORCH DETAIL
SCALE: 1"=1'-0"

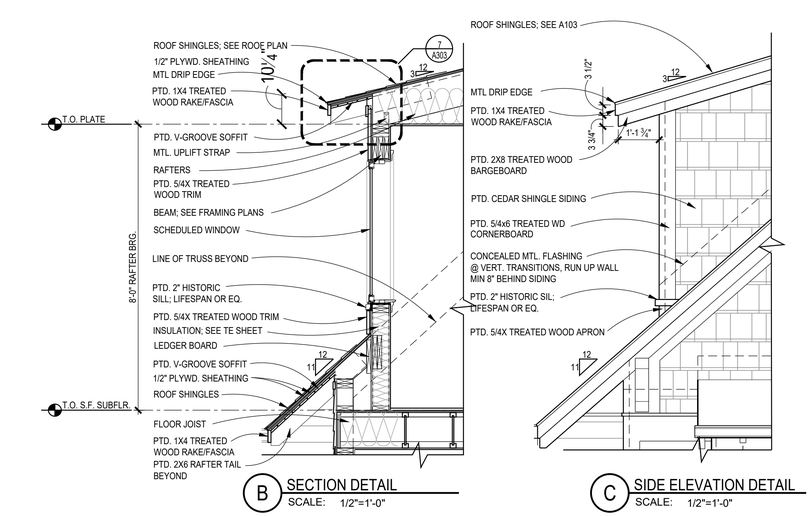

B SECTION DETAIL
SCALE: 1/2"=1'-0"

C SIDE ELEVATION DETAIL
SCALE: 1/2"=1'-0"

1 FRONT DORMER DETAILS
SCALE: AS NOTED

GTM ARCHITECTS

7735 OLD GEORGETOWN ROAD
SUITE 700
BETHESDA, MD 20814
(240)333-2000
(240)333-2001 FAX
WWW.GTMARCHITECTS.COM

Seal

I certify that these documents were prepared or approved by me, and that I am a duly licensed architect under the laws of the State of Maryland. License number 6305, Expiration Date: 12-06-2022

Consultant

Project
25 High Street LOT 1
25 HIGH STREET, BROOKEVILLE, MD 20833

Owner

Developer

PERMIT SET	4-11-2022
Issue Description	Date

GTM Project No.	18.0320
Checked By	GTM
Drawn By	NW/KF
Scale	AS NOTED

Sheet Title
DETAILS

Sheet No.
A304

COPYRIGHT, 2019 GTM ARCHITECTS, INC.

FILE NAME:

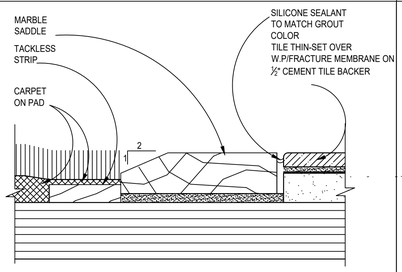

5 THRESHOLD DETAIL
SCALE: N.T.S.

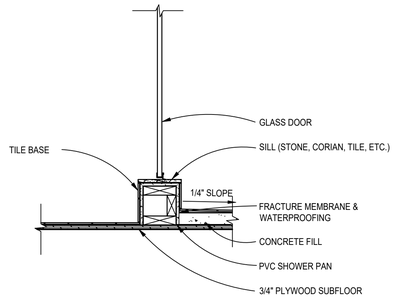

14 SECTION @ SHOWER CURB
SCALE: 1"=1'-0"

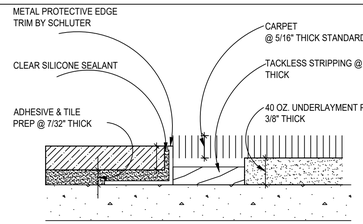

NOTE: TILE CONTRACTOR RESPONSIBLE TO ENGINEER FLUSH CONDITIONS WITH ALL DOOR OPENINGS AND CARPET INSETS, AND TO SUBMIT ANY DETAIL OR RAMPED THRESHOLDS TO GTM FOR APPROVAL. TILE CONTRACTOR RESPONSIBLE TO PREP AND INSTALL ALL TILE MATERIALS, AND TO KEEP PREMISES CLEAN DURING AND AFTER INSTALLATION. TILE CONTRACTOR RESPONSIBLE TO GROUT AND SEAL FINISHED INSTALLATION, AND SUBMIT COLORS FOR GROUTING MATERIALS TO GTM FOR APPROVAL, AND PROVIDE SPEC SHEETS ON SEALANTS, ALONG WITH MAINTENANCE SPECIFICATIONS.

4 TILE-TO-CARPET TRANSITION
SCALE: 12"=1'-0"

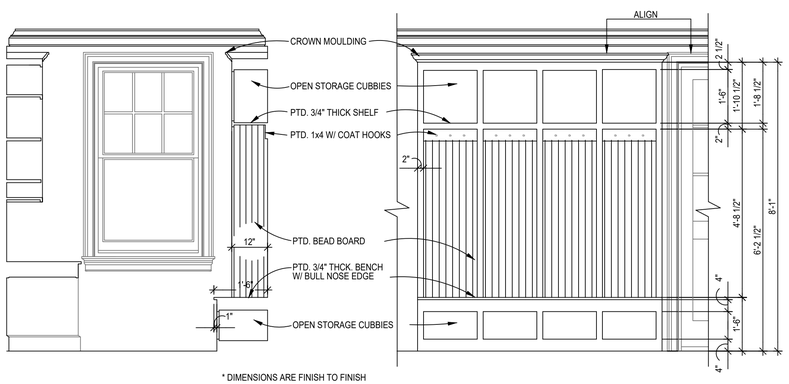

* DIMENSIONS ARE FINISH TO FINISH
* BUILT-IN TO BE FIELD BUILT FROM 1x & 1/2"-3/4" MDO PLYWD. W/ 1x EDGES

A MUD ROOM ELEVATION
SCALE: 1/2"=1'-0"

A MUD ROOM ELEVATION
SCALE: 1/2"=1'-0"

2 BENCH W/ LOCKERS, TYP.
SCALE: 1/2"=1'-0"

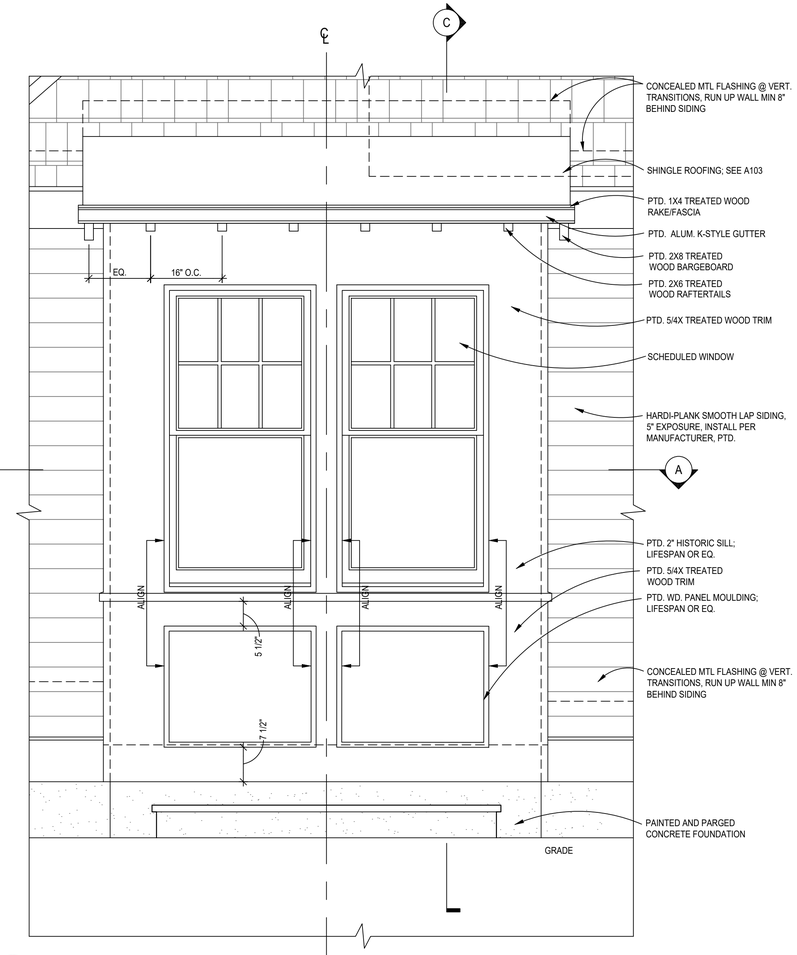

B FRONT ELEVATION
SCALE: 3/4"=1'-0"

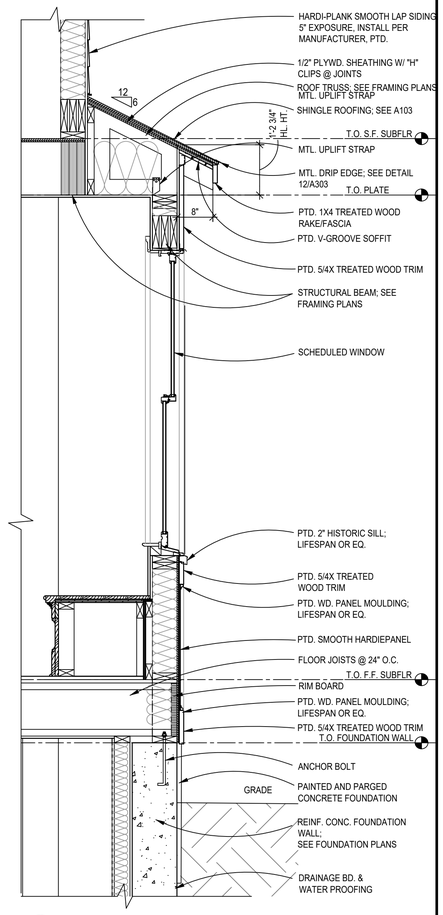

C BAY WINDOW SECTION
SCALE: 3/4"=1'-0"

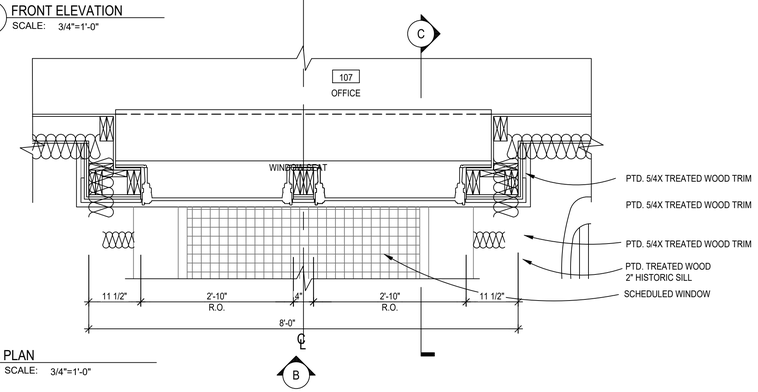

A PLAN
SCALE: 3/4"=1'-0"

1 BAY DETAILS
SCALE: AS NOTED

GTM ARCHITECTS
7735 OLD GEORGETOWN ROAD
SUITE 700
BETHESDA, MD 20814
(240)333-2000
(240)333-2001 FAX
WWW.GTMARCHITECTS.COM

Seal

I certify that these documents were prepared or approved by me, and that I am a duly Licensed Architect under the laws of the State of Maryland, License No. 5305, Expiration Date: 12-06-2022.

Consultant

Project
25 High Street
LOT 1
25 HIGH STREET, BROOKEVILLE, MD 20833

Owner

Developer

Issue Description	Date
PERMIT SET	4-11-2022

GTM Project No.	18.0320
Checked By	GTM
Drawn By	NW/KF
Scale	AS NOTED

Sheet Title
DETAILS

Sheet No.
A305

COPYRIGHT, 2019 GTM ARCHITECTS, INC.

FILE NAME:

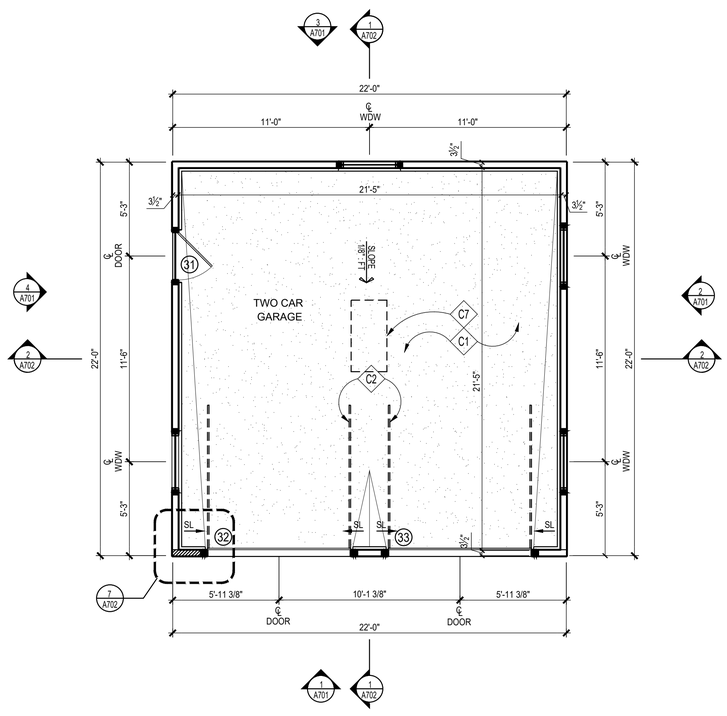

1 GARAGE PLAN

SCALE: 1/4"=1'-0"

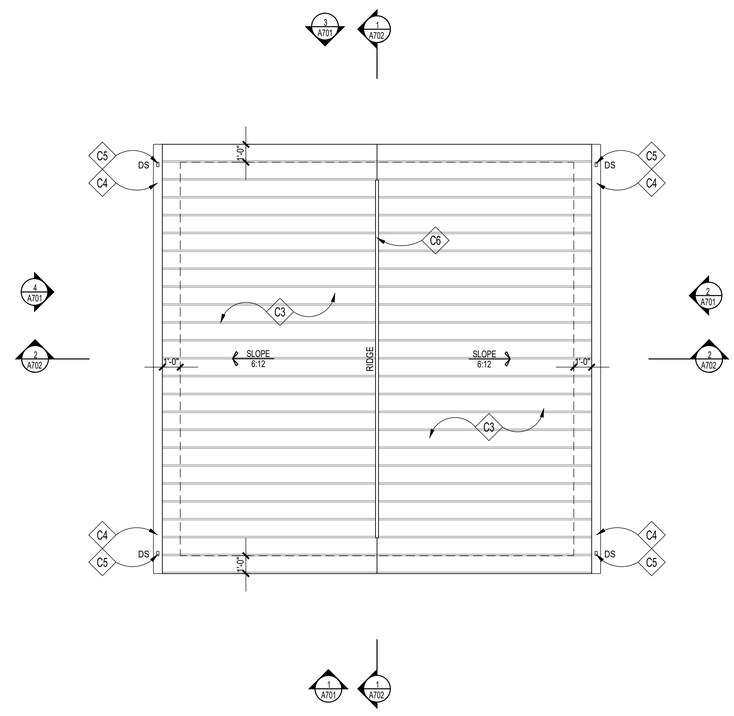

2 ROOF PLAN

SCALE: 1/4"=1'-0"

CONSTRUCTION NOTES

- C1 REINF. CONC. SLAB; SEE FOUNDATION PLAN
- C2 GARAGE DOOR TRACKS ABOVE
- C3 STANDING SEAM METAL ROOF, T.B.S.
- C4 GUTTER TO MATCH MAIN HOUSE
- C5 DOWNSPOUT TO MATCH MAIN HOUSE, TERMINATED IN PERFORATED PIPE; EXTEND BELOW GRADE; DRAIN TO DAYLIGHT OR SUMP PUMP
- C6 RIDGE/HIP VENTS BY COR-A-VENT OR APPROVED EQUAL
- C7 ATTIC ACCESS STAIR

ROOFING NOTES

1. MEMBRANE ROOF SHALL BE 60 MIL, WHITE PVC, ASTM D 4434, TYPE III, FABRIC REINFORCED. THE MEMBRANE SHALL BE ADHERED TO MECHANICALLY FASTENED, POLYISOCYANURATE BOARD INSULATION ASTM C 1289, FELT OR GLASS-FIBER MAT FACER ON BOTH MAJOR SURFACES. TAPERED INSULATION SHALL BE FACTORY-MADE TO A MINIMUM SLOPE OF 1/4" PER FOOT. INSULATION SHALL BE INSTALLED IN TWO LAYERS WITH JOINTS STAGGERED.
2. PROVIDE FLASHING FOR MIN. 8" EACH SIDE OF ALL VALLEYS & PITCH CHANGES

WALL TYPES

TYPICAL EXTERIOR WALL: 2x4 WOOD STUDS 16" O.C. W/ VAPOR BARRIER, 1/2" OSB SHEATHING.

GENERAL NOTES

1. REFER TO THE ARCH DWGS FOR DIMENSIONS, ELEVATIONS, AND BALANCE OF INFORMATION. REFER TO MEP DWGS FOR ADD'L INFO ON DRAINGS, UTILITY LINES, SLEEVES & OPENING REQ'S.
2. REFER TO SN.1 FOR STRUCTURAL NOTES. REFER TO SD.1, SD.2, SD.3, SD.4 & WB.1 FOR APPLICABLE DETAILS NOT REFERENCED ON PLANS.
3. PROVIDE SOLID BLOCKING BETWEEN FLOORS UNDER ALL WOOD POSTS ALL THE WAY DOWN TO TOP OF BEAMS & CONC WALLS. PROVIDE 2x6 SQUASH BLOCKING EA. SIDE OF TJI JOISTS AT STACKED LOAD BEARING WALLS, INSTALL PER TJI. MANUF. PROVIDE INTERMEDIATE HORIZONTAL BLKG. STUDS AT 4'-0" VERTICAL SPACING AT ALL LOAD BEARING WALLS.
4. IN ADDITION TO POSTS SHOWN ON PLAN PROVIDE THE FOLLOWING:
   ADD'L (1) KING STUD EACH SIDE OF OPNGS UP TO 4'-0" WIDE.
   ADD'L (2) KING STUD EACH SIDE OF OPNGS UP TO 8'-0" WIDE.
5. PROVIDE FRAMING CONNECTORS FOR JOISTS, BEAMS & POSTS. CONNECTORS SHALL BE BY SIMPSON STRONG-TIE OR EQ. AND SHALL BE PROPERLY SIZED ACCORDING TO MEMBER SIZES, AND INSTALLED ACCORDING TO MANUFACTURER. PROVIDE SIMPSON H2.5A UPLIFT CONNECTORS AT ALL RAFTERS. PROVIDE ST2215 STRAPS CONNECTING TOP OF SHEARWALLS TO HEADERS.
6. INSTALL CHIMNEY ANCHORAGE STRAPS PER IRC 2012 EDITION.
7. REFER TO WB.1 FOR WALL BRACING PANEL CONSTRUCTION INFORMATION & TYP. DETAILS

GTM ARCHITECTS

7735 OLD GEORGETOWN ROAD
SUITE 700
BETHESDA, MD 20814
(240)333-2000
(240)333-2001 FAX
WWW.GTMARCHITECTS.COM

Seal

STATE OF MARYLAND — NICHOLAS WEBB KIRKPATRICK — No. 29843 — ARCHITECT

I certify that these documents were prepared or approved by me, and that I am a duly licensed architect under the laws of the State of Maryland, license number 5886. Expiration Date: 12/06/2022.

Consultant

Project

25 High Street
LOT 1

25 HIGH STREET, BROOKEVILLE, MD 20833

Owner

Developer

PERMIT SET	4-11-2022

Issue Description	*Date*

GTM Project No.	18.0320
Checked By	GTM
Drawn By	NW/KF
Scale	AS NOTED

Sheet Title

GARAGE PLANS

Sheet No.

A700

COPYRIGHT, 2019 GTM ARCHITECTS, INC.

FILE NAME:

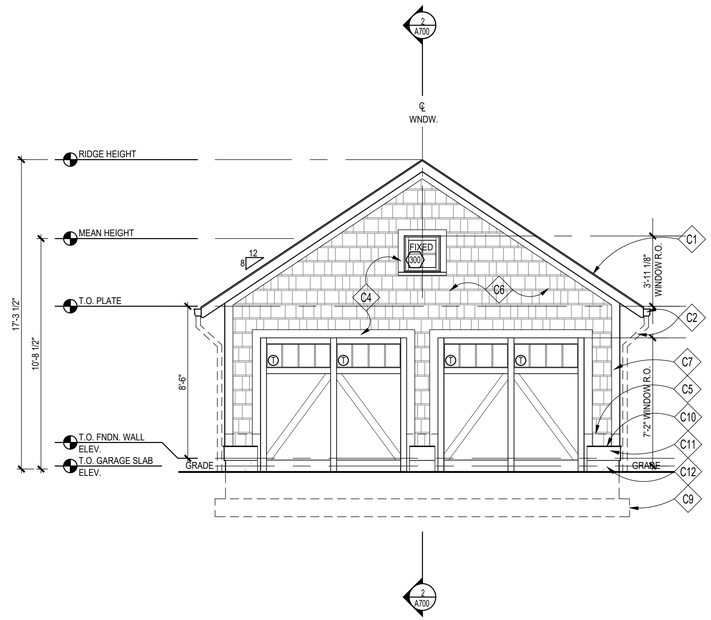

1 FRONT ELEVATION
SCALE: 1/4"=1'-0"

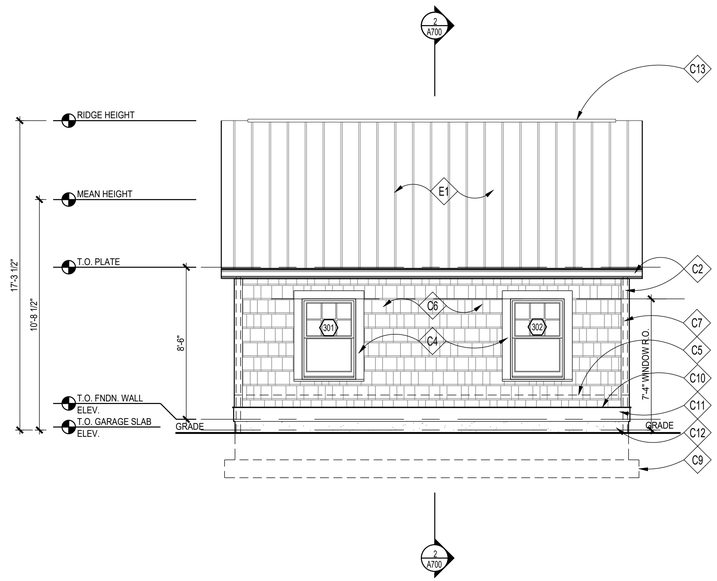

2 RIGHT SIDE ELEVATION
SCALE: 1/4"=1'-0"

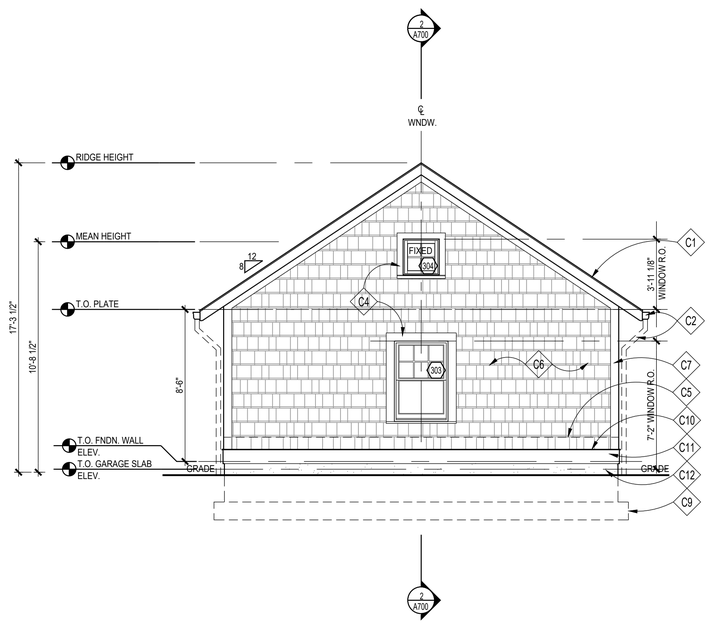

3 REAR ELEVATION
SCALE: 1/4"=1'-0"

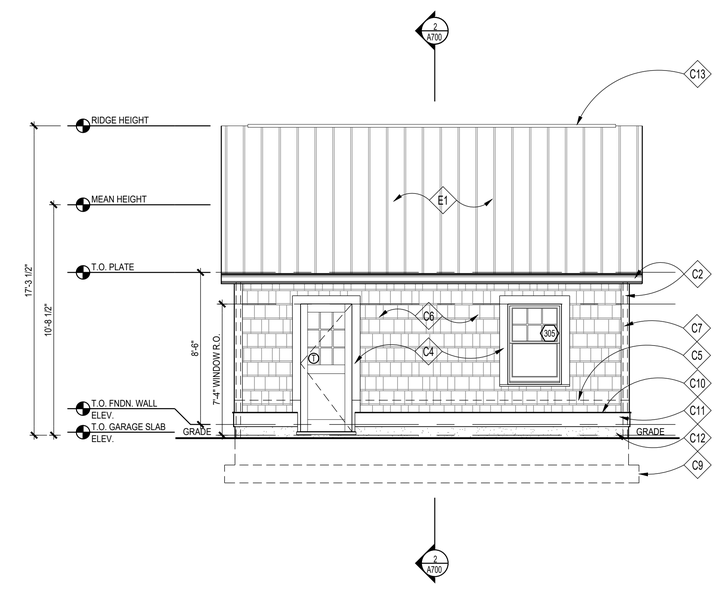

4 LEFT SIDE ELEVATION
SCALE: 1/4"=1'-0"

CONSTRUCTION NOTES

- C1 STANDING SEAM METAL ROOF, T.B.S.
- C2 PTD. ALUM. K-STYLE GUTTER & DOWNSPOUTS TO MATCH MAIN HOUSE, TERMINATED IN PERFORATED PIPE; EXTEND BELOW GRADE; DRAIN TO DAYLIGHT OR SUMP PUMP
- C3
- C4 PTD. 5/4X6 WOOD HEAD & JAMB TRIM W/ HISTORIC SILL
- C5 CONCEALED FLASHING, TYP.
- C6 PTD./STD. CEDAR SHINGLE SIDINGS W/ 6" REVEAL
- C7 PTD. 5/4x6 WD. CORNERBOARD
- C8 PTD. 1X4 WOOD RAKE/FASCIA
- C9 DASHED LINE INDICATES FOOTING BELOW GRADE
- C10 PTD. SLOPED 1X WOOD DRIP CAP, SEE 13/A303 FOR DETAIL
- C11 PTD. 5/4x10 WOOD TRIMBAND
- C12 PARGED & PTD. CONC. FOUNDATION WALL WHERE EXPOSED
- C13 RIDGE VENTS BY COR-A-VENT OR APPROVED EQUAL, TYP.; OMIT IF USING SPRAY FOAM INSULATION, SEE DETAIL '8/A303'

ROOFING NOTES

1. MEMBRANE ROOF SHALL BE 60 MIL, WHITE PVC, ASTM D 4434, TYPE III, FABRIC REINFORCED. THE MEMBRANE SHALL BE ADHERED TO MECHANICALLY FASTENED, POLYISOCYANURATE BOARD INSULATION ASTM C 1289, FELT OR GLASS-FIBER MAT FACER ON BOTH MAJOR SURFACES. TAPERED INSULATION SHALL BE FACTORY-MADE TO A MINIMUM SLOPE OF 1/4" PER FOOT. INSULATION SHALL BE INSTALLED IN TWO LAYERS WITH JOINTS STAGGERED.
2. PROVIDE FLASHING FOR MIN. 8" EACH SIDE OF ALL VALLEYS & PITCH CHANGES

WALL TYPES

TYPICAL EXTERIOR WALL: 2x4 WOOD STUDS 16" O.C. W/ VAPOR BARRIER, 1/2" OSB SHEATHING.

E28

GENERAL NOTES

1. REFER TO THE ARCH DWGS FOR DIMENSIONS, ELEVATIONS, AND BALANCE OF INFORMATION. REFER TO MEP DWGS FOR ADD'L INFO ON DRAINGS, UTILITY LINES, SLEEVES & OPENING REQ'S.
2. REFER TO SN.1 FOR STRUCTURAL NOTES. REFER TO SD.1, SD.2, SD.3, SD.4 & WB.1 FOR APPLICABLE DETAILS NOT REFERENCED ON PLANS.
3. PROVIDE SOLID BLOCKING BETWEEN FLOORS UNDER ALL WOOD POSTS ALL THE WAY DOWN TO TOP OF BEAMS & CONC WALLS. PROVIDE 2x6 SQUASH BLOCKING EA. SIDE OF TJI JOISTS AT STACKED LOAD BEARING WALLS, INSTALL PER TJI. MANUF. PROVIDE INTERMEDIATE HORIZONTAL BLKG. STUDS AT 4'-0" VERTICAL SPACING AT ALL LOAD BEARING WALLS.
4. IN ADDITION TO POSTS SHOWN ON PLAN PROVIDE THE FOLLOWING:
   ADD'L (1) KING STUD EACH SIDE OF OPNGS UP TO 4'-0" WIDE.
   ADD'L (2) KING STUD EACH SIDE OF OPNGS UP TO 8'-0" WIDE.
5. PROVIDE FRAMING CONNECTORS FOR JOISTS, BEAMS & POSTS. CONNECTORS SHALL BE BY SIMPSON STRONG-TIE OR EQ. AND SHALL BE PROPERLY SIZED ACCORDING TO MEMBER SIZES, AND INSTALLED ACCORDING TO MANUFACTURER. PROVIDE SIMPSON H2.5A UPLIFT CONNECTORS AT ALL RAFTERS. PROVIDE ST2215 STRAPS CONNECTING TOP OF SHEARWALLS TO HEADERS.
6. INSTALL CHIMNEY ANCHORAGE STRAPS PER IRC 2012 EDITION.
7. REFER TO WB.1 FOR WALL BRACING PANEL CONSTRUCTION INFORMATION & TYP. DETAILS

GTM ARCHITECTS

7735 OLD GEORGETOWN ROAD
SUITE 700
BETHESDA, MD 20814
(240)333-2000
(240)333-2001 FAX
WWW.GTMARCHITECTS.COM

Seal

STATE OF MARYLAND · KEVIN FOLEY BROWN · REGISTERED PROFESSIONAL ARCHITECT · 12345

I certify that these documents were prepared or approved by me, and that I am a duly licensed architect under the laws of the State of Maryland, license number 8886. Expiration Date: 12-06-2022

Consultant

Project

25 High Street
LOT 1

25 HIGH STREET, BROOKEVILLE, MD 20833

Owner

Developer

Issue Description	*Date*
PERMIT SET	4-11-2022

GTM Project No.	18.0320
Checked By	GTM
Drawn By	NW/KF
Scale	AS NOTED

Sheet Title

GARAGE ELEVATIONS

Sheet No.

A701

COPYRIGHT, 2019 GTM ARCHITECTS, INC.

FILE NAME:

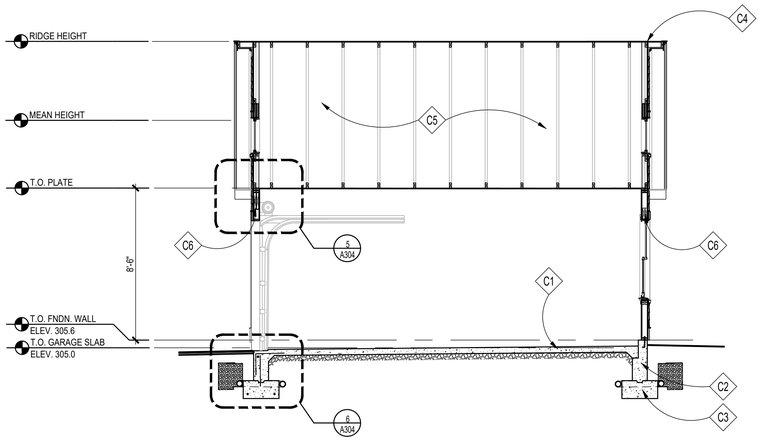

1 BUILDING SECTION

SCALE: 1/4"=1'-0"

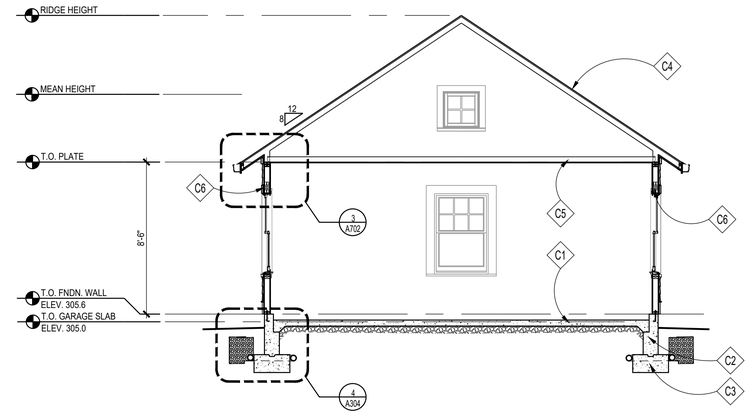

2 BUILDING SECTION

SCALE: 1/4"=1'-0"

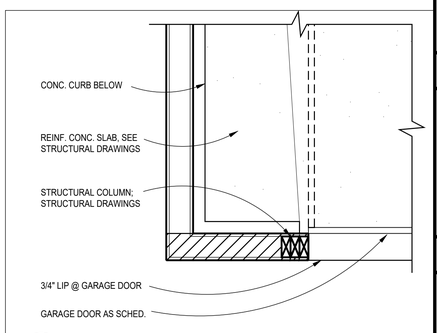

7 GARAGE SILL DETAIL

SCALE: 1" = 1'-0"

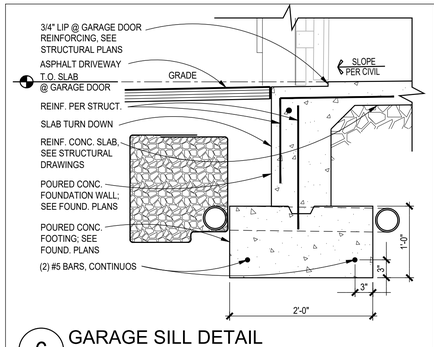

6 GARAGE SILL DETAIL

SCALE: 1" = 1'-0"

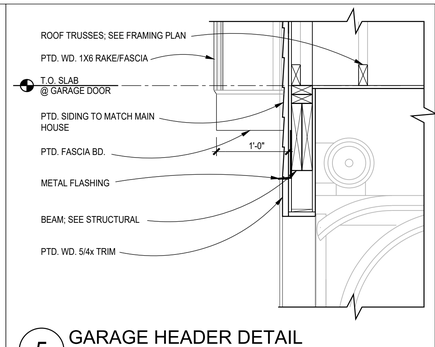

5 GARAGE HEADER DETAIL

SCALE: 1" = 1'-0"

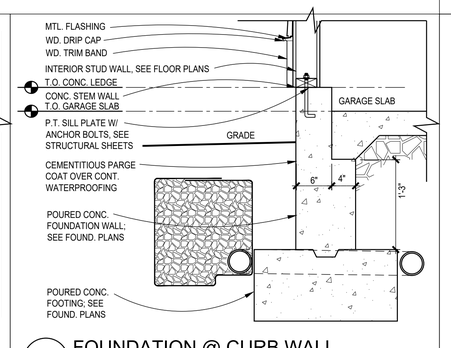

4 FOUNDATION @ CURB WALL

SCALE: 1" = 1'-0"

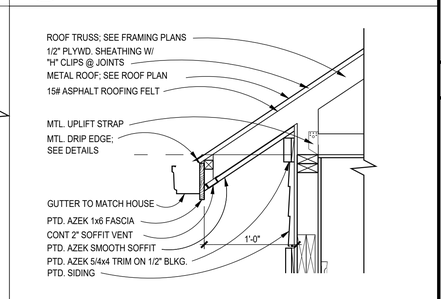

3 GARAGE SOFFIT DETAIL

SCALE: 1" = 1'-0"

(1X1)

SECTION NOTES

- C1 REINF. CONC. SLAB; SEE FOUNDATION PLAN
- C2 CONCRETE FOUNDATION WALL; SEE FOUNDATION PLAN
- C3 FOOTING; SEE FOUNDATION PLAN
- C4 SEE NOTE #1 UNDER GENERAL ROOFING NOTES, TYP.
- C5 TRUSSES; SEE FRAMING PLAN
- C6 BEAM/ LINTEL/ HEADER; SEE FRAMING PLANS

ROOFING NOTES

1. MEMBRANE ROOF SHALL BE 60 MIL, WHITE PVC, ASTM D 4434, TYPE III, FABRIC REINFORCED. THE MEMBRANE SHALL BE ADHERED TO MECHANICALLY FASTENED, POLYISOCYANURATE BOARD INSULATION ASTM C 1289, FELT OR GLASS-FIBER MAT FACER ON BOTH MAJOR SURFACES. TAPERED INSULATION SHALL BE FACTORY-MADE TO A MINIMUM SLOPE OF 1/4" PER FOOT. INSULATION SHALL BE INSTALLED IN TWO LAYERS WITH JOINTS STAGGERED.
2. PROVIDE FLASHING FOR MIN. 8" EACH SIDE OF ALL VALLEYS & PITCH CHANGES

WALL TYPES

TYPICAL EXTERIOR WALL: 2x4 WOOD STUDS 16" O.C. W/ VAPOR BARRIER, 1/2" OSB SHEATHING.

GENERAL NOTES

1. REFER TO THE ARCH DWGS FOR DIMENSIONS, ELEVATIONS, AND BALANCE OF INFORMATION. REFER TO MEP DWGS FOR ADD'L INFO ON DRAINGS, UTILITY LINES, SLEEVES & OPENING REQ'S.
2. REFER TO SN.1 FOR STRUCTURAL NOTES. REFER TO SD.1, SD.2, SD.3, SD.4 & WB.1 FOR APPLICABLE DETAILS NOT REFERENCED ON PLANS.
3. PROVIDE SOLID BLOCKING BETWEEN FLOORS UNDER ALL WOOD POSTS ALL THE WAY DOWN TO TOP OF BEAMS & CONC WALLS. PROVIDE 2x6 SQUASH BLOCKING EA. SIDE OF TJI JOISTS AT STACKED LOAD BEARING WALLS, INSTALL PER TJI. MANUF. PROVIDE INTERMEDIATE HORIZONTAL BLKG. STUDS AT 4'-0" VERTICAL SPACING AT ALL LOAD BEARING WALLS.
4. IN ADDITION TO POSTS SHOWN ON PLAN PROVIDE THE FOLLOWING: ADD'L (1) KING STUD EACH SIDE OF OPNGS UP TO 4'-0" WIDE. ADD'L (2) KING STUD EACH SIDE OF OPNGS UP TO 8'-0" WIDE.
5. PROVIDE FRAMING CONNECTORS FOR JOISTS, BEAMS & POSTS. CONNECTORS SHALL BE BY SIMPSON STRONG-TIE OR EQ. AND SHALL BE PROPERLY SIZED ACCORDING TO MEMBER SIZES, AND INSTALLED ACCORDING TO MANUFACTURER. PROVIDE SIMPSON H2.5A UPLIFT CONNECTORS AT ALL RAFTERS. PROVIDE ST2215 STRAPS CONNECTING TOP OF SHEARWALLS TO HEADERS.
6. INSTALL CHIMNEY ANCHORAGE STRAPS PER IRC 2012 EDITION.
7. REFER TO WB.1 FOR WALL BRACING PANEL CONSTRUCTION INFORMATION & TYP. DETAILS

GTM ARCHITECTS

7735 OLD GEORGETOWN ROAD
SUITE 700
BETHESDA, MD 20814
(240)333-2000
(240)333-2001 FAX
WWW.GTMARCHITECTS.COM

Seal

STATE OF MARYLAND — STEVEN G. MILLER — 25243 — ARCHITECT

I certify that these documents were prepared or approved by me, and that I am a duly licensed architect under the laws of the State of Maryland, license number 25243, Expiration Date: 12/06/2022.

Consultant

Project

25 High Street
LOT 1

25 HIGH STREET, BROOKEVILLE, MD 20833

Owner

Developer

Issue Description	Date
PERMIT SET	4-11-2022

GTM Project No.	18.0320
Checked By	GTM
Drawn By	NW/KF
Scale	AS NOTED

Sheet Title

GARAGE SECTIONS/ DETAILS

Sheet No.

A702

COPYRIGHT, 2019 GTM ARCHITECTS, INC.

FILE NAME:

BASEMENT FOUNDATION WALL SCHEDULE (MAX. UNSPPORTED HEIGHT = 9'-0")					
THICKNESS	UNBALANCED BACK FILL HEIGHT	VERTICAL REBARS (E.F.P. = 30 PSF/FT)	VERTICAL REBARS (E.F.P. = 45 PSF/FT)	VERTICAL REBARS (E.F.P. = 60 PSF/FT)	HORIZONTAL REBARS
8"	UP TO 5'-0"	NOT REQD.	NOT REQD.	NOT REQUIRED	#4 @ 24" O.C.
	5'-0" < HT < 6'-0"	NOT REQD.	NOT REQD.	#5 @ 36" O.C.	
	6'-0" < HT < 7'-0"	NOT REQD.	#5 @ 36" O.C.	#5 @ 24" O.C.	
	7'-0" < HT < 8'-0"	#4 @ 24" O.C.	#5 @ 24" O.C.	#5 @ 20" O.C.	
	8'-0" < HT < 9'-0"	#4 @ 18" O.C.	#5 @ 20" O.C.	#5 @ 16" O.C.	

NOTE:
1. BASED ON TABLE 3.12 OF PCA-100 "PRESCRIPTIVE DESIGN OF EXTERIOR CONCRETE WALLS" WITH FOLLOWING CRITERIA
2. f'C' = 3000 psi & Fy = 60000 ksi
3. E.F.P. = EQUIVALENT EARTH PRESSURE
4. MAXIMUM WALL HEIGHT = 9'-0"
5. MIN. COVER TO REINFORCEMENT AT INSIDE FACE = 3/4" & MIN. COVER TO REINFORCEMENT AT OUTSIDE FACE = 1 1/2"
6. PROVIDE MINIMUM ONE #4 REBAR 12" FROM TOP & BOTTOM.
7. PROVIDE PROPER DRAINAGE TO THE BACKFILL REFER TO ARCHITECTURAL DRAWINGS FOR DRAINAGE AND WATEPROOFING
8. REFER TO GEOTECHNICAL REPORT FOR ALL FURTHER RECOMMENDATIONS. GEOTECHNICAL ENGINEER TO VERIFY FOUNDATION DESIGN CRITERIA FOR SOIL BEARING CAPACITY AND EARTH PRESSURE.
9. REBARS CAN BE SUBSTITUTED WITH #4 REBARS TO MATCH SPECIFIED AREA OF REINFORCEMENT IN ABOVE TABLE

BASEMENT FOUNDATION WALL SCHEDULE (MAX. UNSPPORTED HEIGHT = 9'-0")					
THICKNESS	UNBALANCED BACK FILL HEIGHT	VERTICAL REBARS (E.F.P. = 30 PSF/FT)	VERTICAL REBARS (E.F.P. = 45 PSF/FT)	VERTICAL REBARS (E.F.P. = 60 PSF/FT)	HORIZONTAL REBARS
10"	UP TO 6'-0"	NOT REQD.	NOT REQD.	NOT REQD.	#4 @ 24" O.C.
	6'-0" < HT < 7'-0"	NOT REQD.	NOT REQD.	#4 @ 24" O.C.	
	7'-0" < HT < 8'-0"	NOT REQD.	#4 @ 18" O.C.	#4 @ 16" O.C.	
	8'-0" < HT < 9'-0"	NOT REQD.	#4 @ 16" O.C.	#4 @ 12" O.C.	

NOTE:
1. BASED ON TABLE A.4 OF ACI 332-10 WITH FOLLOWING CRITERIA
2. f'C' = 3000 psi & Fy = 60000 ksi
3. E.F.P. = EQUIVALENT EARTH PRESSURE
4. MAXIMUM WALL HEIGHT = 9'-0"
5. MIN. COVER TO REINFORCEMENT AT INSIDE FACE = 3/4" & MIN. COVER TO REINFORCEMENT AT OUTSIDE FACE = 1 1/2"
6. PROVIDE MINIMUM ONE #4 REBAR 12" FROM TOP & BOTTOM.
7. PROVIDE PROPER DRAINAGE TO THE BACKFILL REFER TO ARCHITECTURAL DRAWINGS FOR DRAINAGE AND WATEPROOFING
8. REFER TO GEOTECHNICAL REPORT FOR ALL FURTHER RECOMMENDATIONS. GEOTECHNICAL ENGINEER TO VERIFY FOUNDATION DESIGN CRITERIA FOR SOIL BEARING CAPACITY AND EARTH PRESSURE.

LEGENDS:

TS = THICKENED SLAB
WF = WALL FOOTING
F = FOOTING

FOUNDATION NOTES:

1. FOUNDATION DESIGN IS BASED ON ASSUMED DESIGN CRITERIA AS SPECIFIED ON GENERAL NOTES SHEET. AND SHALL BE FIELD VERIFIED BY GEOTECHNICAL ENGINEER. NOTIFY ENGINEER IF ANY DESCRIPANCIES ARE FOUND OR CRITERIA DIFFERS FROM ASSUMED CRITERIA.
2. VERIFY AND COORDINATE ALL DIMENSIONS WITH ARCHITECTURAL AND CIVIL DRAWINGS. NOTIFY ENGINEER IF ANY COORDINATION IS REQUIRED.
3. BASEMENT SLAB SHALL BE 4" CONC. SLAB ON GRADE WITH 6x6xW1.4xW1.4 W.W.F U.N.O.
4. ALL EXTERIOR FOOTINGS SHALL BE LOWERED TO MINIMUM FROST DEPTH AS REQUIRED BY LOCAL JURISDICTIONS.
5. PROVIDE MIN. 3'-0"x3'-0"x12" CONC. FOOTING W/ #5 @ 12" O.C. BOTT. EA. WAY. UNDER EACH POST UNLESS NOTED OTHERWISE ON FOUDATION PLAN.
6. PROVIDE MIN. 16"x12" CONC. THICKENED SLAB UNDER BEARING WALLS UNLESS NOTED OTHERWISE.
7. PROVIDE MIN. 24"x8" CONC. WALL FOOTING W/ MIN. (2) #4 CONT. AT BOTT. UNDER ALL FOUNDATION WALLS UNLESS NOTED OTHERWISE.
8. PROVIDE WATERPROOFING, DAMP PROOFING PER APPLICABLE CODES AT FOUNDATION WALL, FOOTINGS AND SLABS.
9. INSTALL CONTINUOUS 4"Ø PERFORATED DRAIN PIPES ON EACH SIDE OF FOOTING. CONNECTED WITH 1 1/2"Ø WEEP HOLES @ 8'-0" O.C. AND DRAIN TO SUMP PUMP OR DAY LIGHT.

PLAN LEGENDS & SYMBOLS:

- INDICATES BEARING WALL
- INDICATES DRAIN HOLE FROM ABOVE
- INDICATES JOIST/TRUSS HANEGR (REFER TO SHOP DWGS)
- INDICATES FRAMING DIRECTION
- INDICATES REBAR DIRECTION
- (_J+_S) — INDICATES NO. OF KING STUDS AT EACH END; INDICATES NO. OF JACK STUDS AT EACH END
- WF?? — INDICATES WALL FOOTING; WIDTH OF WALL FOOTING IN INCHES
- TS?? — INDICATES THICKENED SLAB; WIDTH OF THICKENED SLAB IN INCHES
- F.x.x — INDICATES ISOLATED COLUMN FOOTING; INDICATES SIZE OF FOOTING IN DECIMAL FEET
- ML?? — MICROLAM LVL 2.0E; DEPTH OF MICROLAM LVL IN INCHES
- LSL?? — LAMINATED STRAND LUMBER 1.7E; DEPTH OF TIMBERSTAND LSL BEAM IN INCHES
- PSL?? — PARALLAM STRAND LUMBER 2.0E; WIDTHxDEPTH OF MEMBER
- CC — COLUMN CAP
- CB — COLUMN BASE
- HD — HOLD DOWN ANCHOR
- MS — METAL STRAP
- H — JOIST/TRUSS/BEAM HANGER
- HC — HURRICANE CLIPS

WALL FOOTING SCHEDULE	
MARK	DESCRIPTION
WF18	18" x 8" CONC. FTG. W/ (2) #4 CONT. @ BOTT.
WF20	20" x 8" CONC. FTG. W/ (2) #4 CONT. @ BOTT.

STEEL COLUMN SCHEDULE	
MARK	DESCRIPTION
PIPE3-STD	3" Ø STANDARD STEEL PIPE COLUMN
PIPE3.5-ADJ-11GA	3.50"Ø x 11GA. ADJUSTABLE STEEL PIPE COLUMN
PIPE3.5-STD	3 1/2"Ø STANDARD STEEL PIPE COLUMN
PIPE4-STD	4"Ø STANDARD STEEL PIPE COLUMN

COLUMN FOOTING SCHEDULE	
MARK	DESCRIPTION
F3.0	3'-0" x 3'-0" x 12" CONC. FTG W/ #4 @ 12" O.C. BOTT. EA. WAY
F5.0	5'-0" x 5'-0" x 12" CONC. FTG W/ #5 @ 12" O.C. BOTT. EA. WAY
F5.5	5'-6" x 5'-6" x 12" CONC. FTG W/ #5 @ 12" O.C. BOTT. EA. WAY

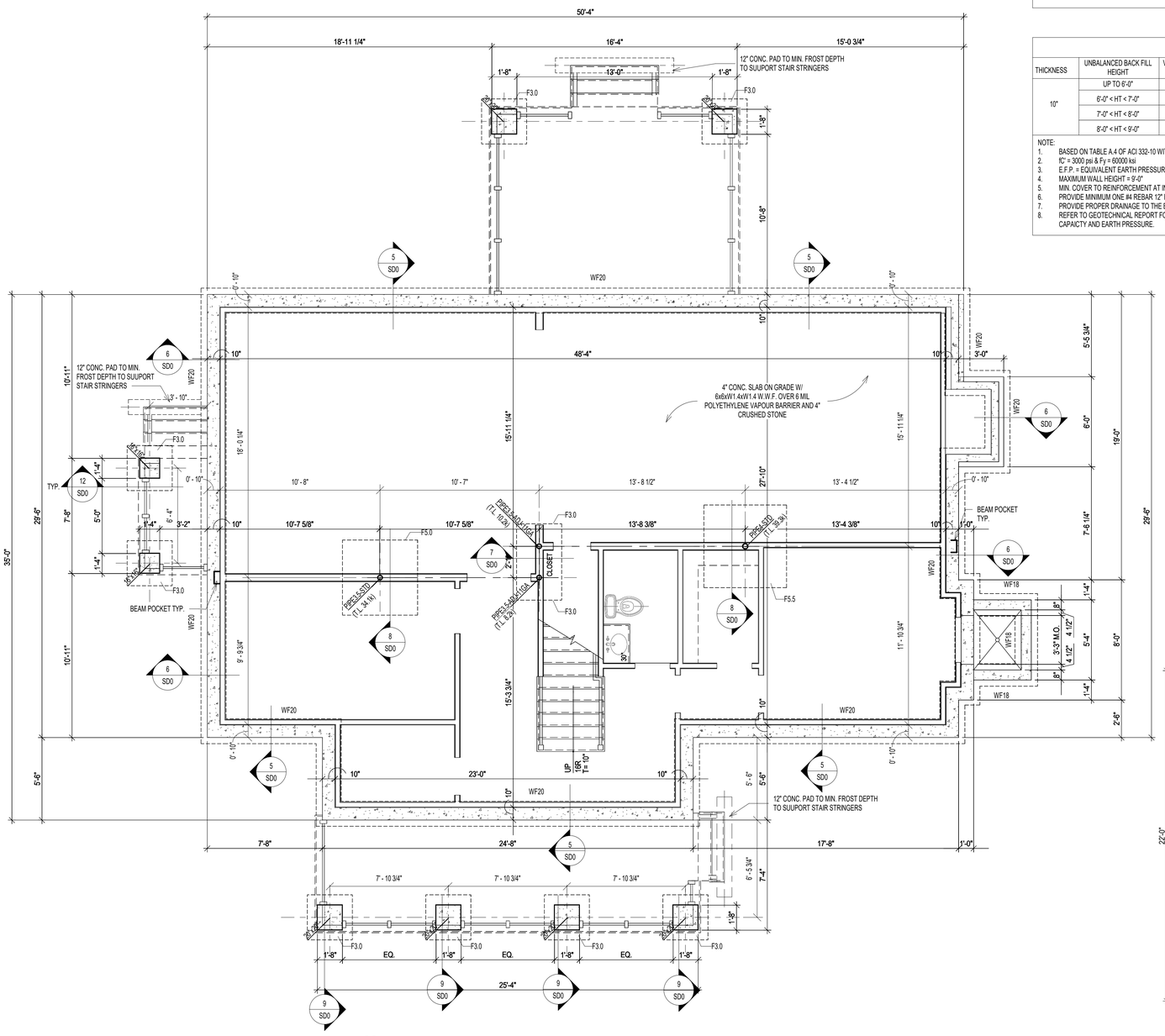

1 S0 FOUNDATION PLAN
SCALE: 1/4" = 1'-0"

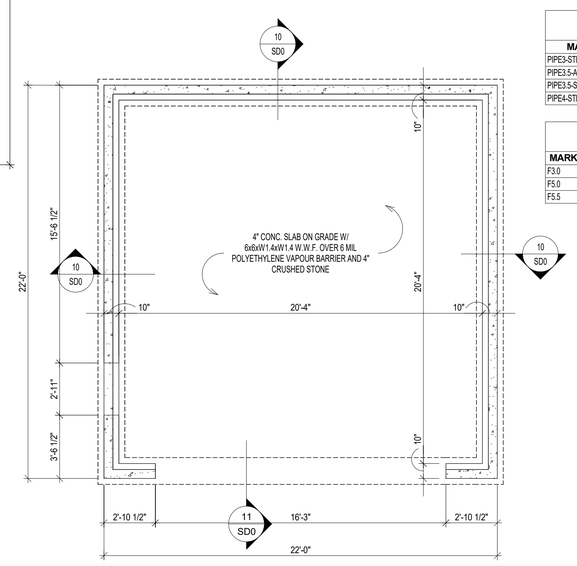

4 S0 FOUNDATION PLAN @ GARAGE
SCALE: 1/4" = 1'-0"

© COPYRIGHT 2016
Structural Engineering content of this drawings are property of structBIM LLC and are issued for this project only. Any re-use or re-production of these drawings shall not be done without written consent of structBIM LLC. These drawings are to be read in conjuction with project specifications and drawings from other consultants. These drawings shall not be used as shop drawings. Do not scale drawings, use dimensions as specified.

GTM ARCHITECTS

7735 OLD GEORGETOWN ROAD
SUITE 700
BETHESDA, MD 20814
(240)333-2000
(240)333-2001 FAX
WWW.GTMARCHITECTS.COM

Seal

STATE OF MARYLAND — KRISHNA KANDEL — 40082 — PROFESSIONAL ENGINEER

Consultant

structBIM ENGINEERS
WE DESIGN....WE BIM
46400 BENEDICT DR, SUITE #211
PHONE: 703-657-4481
E-MAIL: info@structBIM.com

Project

19 HIGH STREET, LOT 1
BROOKVILLE, MD 20833

I certify that these documents were prepared or approved by me, and that I am a duly licensed Professional Engineer under the laws of the State of Maryland, license number 40082, Expiration Date: 02-13-2023.

Issue Description	*Date*

structBIM Project No.	21-0243
Checked By	KK
Drawn By	KK
Scale	1/4" = 1'-0"

Sheet Title

FOUNDATION PLAN

Sheet No.

S0

COPYRIGHT, 2016 structBIMEngineers, LLC.

PLOTTED ON: 4/19/2022 12:45:21 PM

FILE NAME:

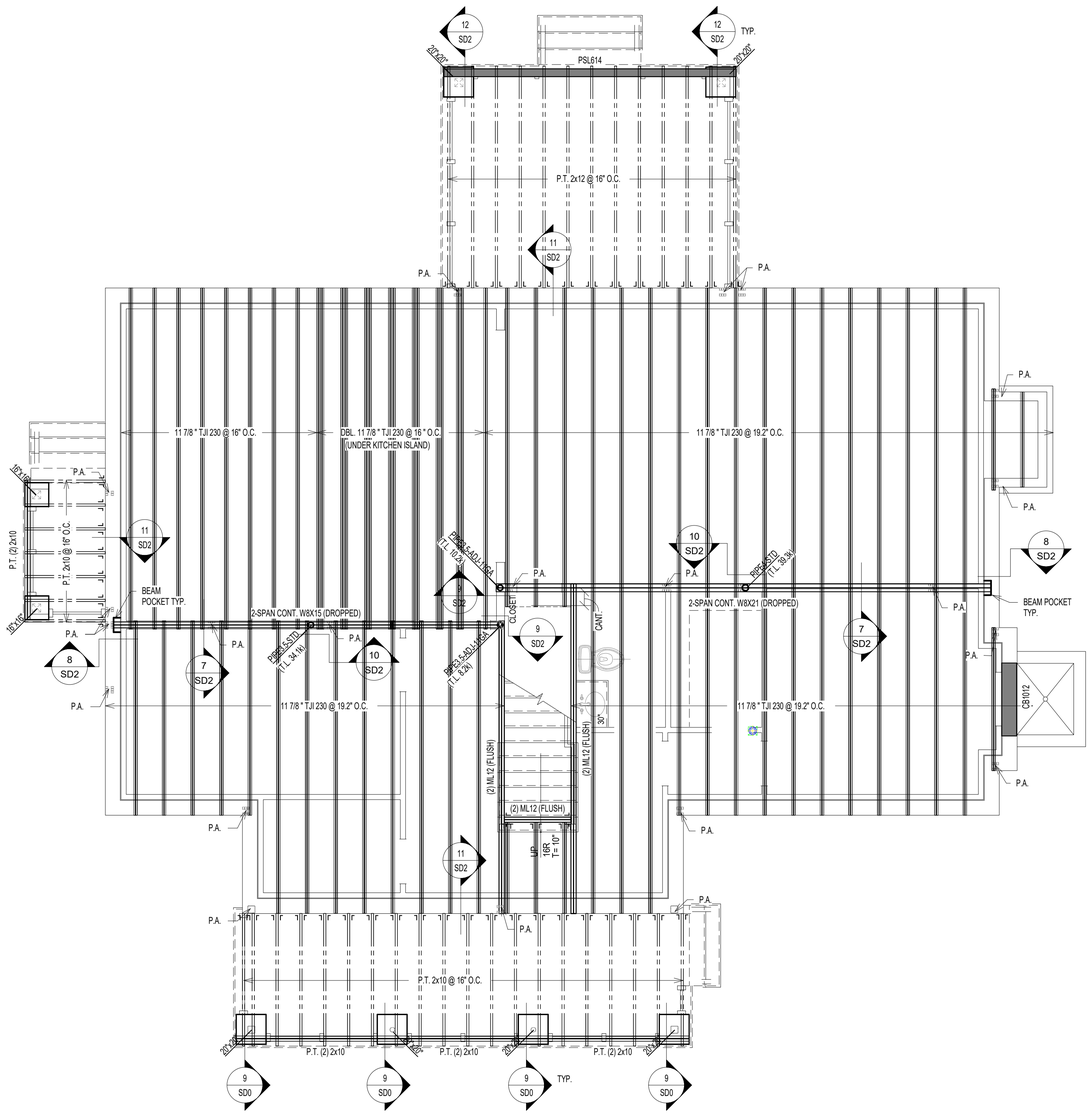

1 S1 FIRST FLOOR FRAMING PLAN
SCALE: 1/4" = 1'-0"

2 S1 FIRST FLOOR FRAMING PLAN @ GARAGE
SCALE: 1/4" = 1'-0"

NOTES:

1. FLOOR JOISTS SHALL BE SPACED @ 16" O.C. UNLESS NOTED OTHERWISE.
2. (J) INDICATED JACK STUDS & (S) INDICATES KING STUDS. EXAMPLE: 1J+1S = ONE JACK STUD & ONE KING STUD AT EACH END OF SPECIFIED HEADER.
3. FLOOR SHEATHING SHALL BE 3/4" APA RATED 3/4" T&G PLYWOOD WITH SPAN RATING OF 48/24 OR STURD-I-FLOOR WITH 24" O.C. GRADE.
4. WALL SHEATHING SHALL BE 7/16" APA RATED OSB/PLYWOOD CONTINUOUS SHEATHING W/ 8d NAILS @ 6" O.C.ON EDGES AND 12" O.C. IN-FIELD.
5. INSTALL BRIDGING BETWEEN JOISTS AT MID-SPAN OR AS REQUIRED PER MANUFACTURER BRIDGING BETWEEN JOISTS UNDER KITCHEN PLATFORMS AND CERAMIC TILE AREAS FOR MIN.THREE JOIST BAYS @ 8'-0" O.C. MAX.
6. FLOOR JOISTS SHALL HAVE 1/2" GYPSUM BOARD CEILING ATTACHED DIRECTLY TO UNDERSIDE OF BOTTOM FLANGE OF JOIST, NOTIFY ENGINEER OF ANY UNFINISHED AREAS.
7. ALL JOISTS ARE DESIGNED PER MIN. PRO RATING (BASED ON LEVEL WEYERHAEUSER PRO RATING CRITERIA) CRITERIA OF 38. NOTIFY ENGINEER, IF HIGHER PRO RATING IS REQUIRED.
8. INSTALL SQUASH BLOCKS AT EVERY BEARING LOCATION AND PROVIDE SOLID BLOCKING UNDER EVERY BEARING WALL FROM ABOVE AT ALL I JOISTS.
9. PROVIDE JOISTS AT MAX. 16" O.C. SPACING UNDER CERAMIC TILE AREAS. JOIST MANUFACTURER TO DESIGN JOISTS FOR DEFLECTION LIMIT OF L/720 OR 0.3" MAX. COORDINATE LOCATION OF CERAMIC TILE AREAS WITH ARCHITECTURAL DRAWINGS.
10. PROVIDE DOUBLE JOISTS UNDER KITCHEN ISLANDS, OVERSIZED BATH TUBS.
11. WEB STIFFENERS ARE REQUIRED WHEN INTERMEDIATE BEARING LENGTH IS LESS THAN 5 1/4" AND SPAN ON EITHER SIDE OF BEARING IS LARGER THAN REQUIRED PER JOIST MANUFACTURER.
12. PROTECT ALL UNTREATED WOOD FROM DIRECT CONTACT WITH CONCRETE OR MASONRY.
13. PROVIDE SQUASH BLOCKS ON BOTH SIDES AT BEARING WALL LOCATIONS WITH ONE 10d NAILS AT EACH FLANGE.
14. PROVIDE BLOCKING PANELS PER MANUFACTURER'S SPECIFICATIONS, IF JOISTS ARE SUPPORTING SHEAR WALL FROM ABOVE.
15. PROVIDE SOLID BLOCKING BETWEEN JOISTS WHEN SUPPORTING BEARING WALL FROM ABOVE.
16. PROVIDE BACKER/FILLER BLOCKS AS RECOMMENDED BY JOIST MANUFACTURER AT CONNECTION LOCATIONS OR MULTIPLE JOISTS SUPPORTING POSTS FROM ABOVE.
17. DO NOT CUT HOLES OR NOTCHES WITHOUT PRIOR APPROVAL FROM ENGINEER OR JOIST MANUFACTURER.
18. PROVIDE SOLID BLOCKING OF SAME SIZE WITHIN FLOOR SYSTEM UNDER ALL JACK STUDS, KING STUDS & POSTS FROM ABOVE.
19. PROVIDE MIN. (2) 2x12 UP TO 4'-0" SPAN, (2) ML10 FOR 4'-0" TO 6'-0" SPAN, (2) ML12 6'-0" TO 9'-0" SPAN WHERE BEAM SIZES ARE NOT SPECIFIED ON PLANS. ANY SPANS LARGER THAN 9'-0" SUPPORTING FRAMING AND NOT SPECIFIED ON PLANS SHALL BE NOTIFIED TO ENGINEER IMMEDIATELY.
20. PROVIDE MIN. DOUBLE JOISTS OR SPECIAL FLOOR TRUSS UNDER (2) 2x POSTS AND (2) PLY MICROLAM LVL OR SPECIAL FLOOR TRUSS TO MATCH FLOOR THICKNESS UNDER (3) 2x POSTS UNLESS NOTED OTHERWISE ON THE PLAN. CONTRACTOR SHALL NOTIFY ENGINEER FOR SUPPORTING STRUCTURAL MEMBER FOR ALL OTHER POST SIZES COMING FROM ABOVE.
21. PROVIDE MIN. (3) 2x POST UNDER BEAMS UNLESS NOTED OTHERWISE.
22. ALL POSTS SHALL CONTINUE DOWN TO FOUNDATION OR STRUCTURAL MEMBER SUCH AS BEAM/GIRDER TRUSS BELOW.
23. PROVIDE MIN. 3 JACK STUDS + 2 KING STUDS AT ALL HEADERS UNLESS NOTED OTHERWISE.
24. ALL WALL STUDS SHALL SPF#2 AND SHALL BE SPACED AT MAX. 16" O.C. UNLESS NOTED OTHERWISE.
25. ALL TWO STORY HIGH WALLS SHALL BE (2) 2x6 SPF#2 BALLOON FRAMED UNLESS NOTED OTHERWISE.
26. PROVIDE FULL HEIGHT BLOCKING BETWEEN JOISTS UP TO THREE JOIST BAYS WHERE JOISTS ARE PARALLEL TO FOUNDATION WALL.

PLAN LEGENDS & SYMBOLS:

- INDICATES BEARING WALL
- INDICATES DRAIN HOLE FROM ABOVE
- 1 r — INDICATES JOIST/TRUSS HANEGR (REFER TO SHOP DWGS)
- INDICATES FRAMING DIRECTION
- INDICATES REBAR DIRECTION
- (J+_S) — INDICATES NO. OF KING STUDS AT EACH END; INDICATES NO. OF JACK STUDS AT EACH END
- WF?? — INDICATES WALL FOOTING; WIDTH OF WALL FOOTING IN INCHES
- TS?? — INDICATES THICKENED SLAB; WIDTH OF THICKENED SLAB IN INCHES
- F.x.x — INDICATES ISOLATED COLUMN FOOTING; INDICATES SIZE OF FOOTING IN DECIMAL FEET
- ML?? — MICROLAM LVL 2.0E; DEPTH OF MICROLAM LVL IN INCHES
- LSL?? — LAMINATED STRAND LUMBER 1.7E; DEPTH OF TIMBERSTAND LSL BEAM IN INCHES
- PSL?? — PARALLAM STRAND LUMBER 2.0E; WIDTHxDEPTH OF MEMBER
- CC — COLUMN CAP
- CB — COLUMN BASE
- HD — HOLD DOWN ANCHOR
- MS — METAL STRAP
- H — JOIST/TRUSS/BEAM HANGER
- HC — HURRICANE CLIPS

MICROLAM LVL BEAM SCHEDULE

MARK	DESCRIPTION
(2) ML10	(2) 1 3/4" x 9 1/2" LVL - 1.9E
(2) ML12	(2) 1 3/4" x 11 7/8" LVL - 1.9E
(2) ML14	(2) 1 3/4" x 14" LVL - 1.9E
(3) ML10	(3) 1 3/4" x 9 1/2" LVL - 1.9E
(3) ML12	(3) 1 3/4" x 11 7/8" LVL - 1.9E
(3) ML14	(3) 1 3/4" x 14" LVL - 1.9E
(4) ML12	(4) 1 3/4" x 11 7/8" LVL - 1.9E

STEEL COLUMN SCHEDULE

MARK	DESCRIPTION
PIPE3-STD	3" Ø STANDARD STEEL PIPE COLUMN
PIPE3.5-ADJ-11GA	3.5Ø x 11GA. ADJUSTABLE STEEL PIPE COLUMN
PIPE3.5-STD	3 1/2"Ø STANDARD STEEL PIPE COLUMN
PIPE4-STD	4"Ø STANDARD STEEL PIPE COLUMN

© COPYRIGHT 2016
Structural Engineering content of this drawings are property of structBIM LLC and are issued for this project only. Any re-use or re-production of these drawings shall not be done without written consent of structBIM LLC. These drawings are to be read in conjuction with project specifications and drawings from other consultants. These drawings shall not be used as shop drawings. Do not scale drawings, use dimensions as specified.

GTM ARCHITECTS

7735 OLD GEORGETOWN ROAD
SUITE 700
BETHESDA, MD 20814
(240)333-2000
(240)333-2001 FAX
WWW.GTMARCHITECTS.COM

GTM

Seal

STATE OF MARYLAND — KAMAL KANDAL — 40082 — PROFESSIONAL ENGINEER

Consultant

structBIM ENGINEERS
WE DESIGN....WE BIM
46400 BENEDICT DR, SUITE #211
PHONE: 703-657-4481
E-MAIL: info@structBIM.com

Project

19 HIGH STREET, LOT 1
BROOKVILLE, MD 20833

I certify that these documents were prepared or approved by me, and that I am a duly licensed Professional Engineer under the laws of the State of Maryland, license number 40082. Expiration Date: 02-13-2023.

Issue Description	*Date*

structBIM Project No.	21-0243
Checked By	KK
Drawn By	KK
Scale	1/4" = 1'-0"

Sheet Title
FIRST FLOOR FRAMING PLAN

Sheet No.
S1

COPYRIGHT, 2016 structBIMEngineers, LLC.
PLOTTED ON: 4/15/2022 12:45:24 PM

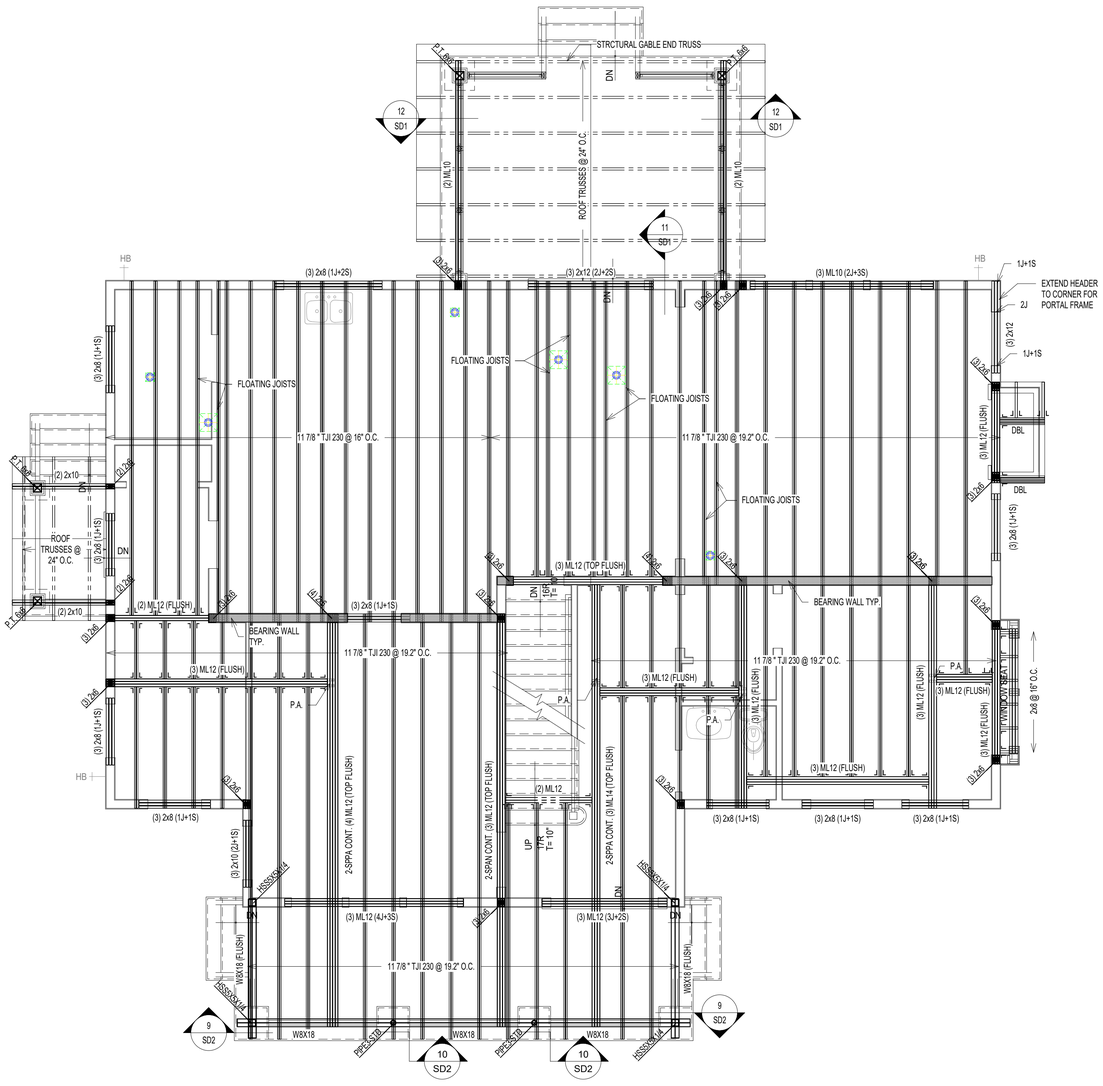

1 / S2 SECOND FLOOR FRAMING PLAN
SCALE: 1/4" = 1'-0"

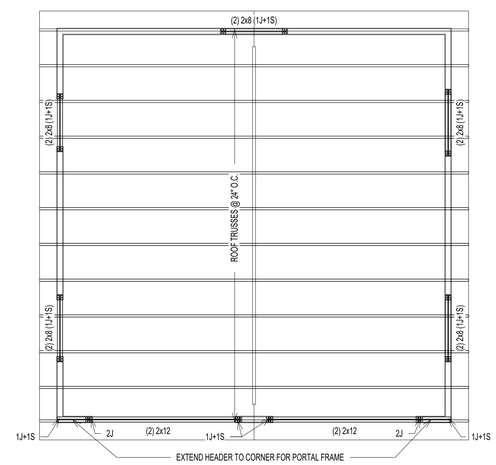

2 / S2 ROOF FRAMING PLAN @ GARAGE
SCALE: 1/4" = 1'-0"

NOTES:

1. FLOOR JOISTS SHALL BE SPACED @ 16" O.C. UNLESS NOTED OTHERWISE.
2. (J) INDICATED JACK STUDS & (S) INDICATES KING STUDS. EXAMPLE: 1J+1S = ONE JACK STUD & ONE KING STUD AT EACH END OF SPECIFIED HEADER.
3. FLOOR SHEATHING SHALL BE 3/4" APA RATED 3/4" T&G PLYWOOD WITH SPAN RATING OF 48/24 OR STURD-I-FLOOR WITH 24" O.C. GRADE.
4. WALL SHEATHING SHALL BE 7/16" APA RATED OSB/PLYWOOD CONTINUOUS SHEATHING W/ 8d NAILS @ 6" O.C.ON EDGES AND 12" O.C. IN-FIELD.
5. INSTALL BRIDGING BETWEEN JOISTS AT MID-SPAN OR AS REQUIRED PER MANUFACTURER BRIDGING BETWEEN JOISTS UNDER KITCHEN PLATFORMS AND CERAMIC TILE AREAS FOR MIN.THREE JOIST BAYS @ 8'-0" O.C. MAX.
6. FLOOR JOISTS SHALL HAVE 1/2" GYPSUM BOARD CEILING ATTACHED DIRECTLY TO UNDERSIDE OF BOTTOM FLANGE OF JOIST. NOTIFY ENGINEER OF ANY UNFINISHED AREAS.
7. ALL JOISTS ARE DESIGNED PER MIN. PRO RATING (BASED ON LEVEL WEYERHAEUSER PRO RATING CRITERIA) CRITERIA OF 38. NOTIFY ENGINEER. IF HIGHER PRO RATING IS REQUIRED.
8. INSTALL SQUASH BLOCKS AT EVERY BEARING LOCATION AND PROVIDE SOLID BLOCKING UNDER EVERY BEARING WALL FROM ABOVE AT ALL I JOISTS.
9. PROVIDE JOISTS AT MAX. 16" O.C. SPACING UNDER CERAMIC TILE AREAS. JOIST MANUFACTURER TO DESIGN JOISTS FOR DEFLECTION LIMIT OF L/720 OR 0.3" MAX. COORDINATE LOCATION OF CERAMIC TILE AREAS WITH ARCHITECTURAL DRAWINGS.
10. PROVIDE DOUBLE JOISTS UNDER KITCHEN ISLANDS, OVERSIZED BATH TUBS.
11. WEB STIFFENERS ARE REQUIRED WHEN INTERMEDIATE BEARING LENGTH IS LESS THAN 5 1/4" AND SPAN ON EITHER SIDE OF BEARING IS LARGER THAN REQUIRED PER JOIST MANUFACTURER.
12. PROTECT ALL UNTREATED WOOD FROM DIRECT CONTACT WITH CONCRETE OR MASONRY.
13. PROVIDE SQUASH BLOCKS ON BOTH SIDES AT BEARING WALL LOCATIONS WITH ONE 10d NAILS AT EACH FLANGE.
14. PROVIDE BLOCKING PANELS PER MANUFACTURER'S SPECIFICATIONS, IF JOISTS ARE SUPPORTING SHEAR WALL FROM ABOVE.
15. PROVIDE SOLID BLOCKING BETWEEN JOISTS WHEN SUPPORTING BEARING WALL FROM ABOVE.
16. PROVIDE BACKER/FILLER BLOCKS AS RECOMMENDED BY JOIST MANUFACTURER AT CONNECTION LOCATIONS OR MULTIPLE JOISTS SUPPORTING POSTS FROM ABOVE.
17. DO NOT CUT HOLES OR NOTCHES WITHOUT PRIOR APPROVAL FROM ENGINEER OR JOIST MANUFACTURER.
18. PROVIDE SOLID BLOCKING OF SAME SIZE WITHIN FLOOR SYSTEM UNDER ALL JACK STUDS, KING STUDS & POSTS FROM ABOVE.
19. PROVIDE MIN. (2) 2x12 UP TO 4'-0" SPAN, (2) ML10 FOR 4'-0" TO 6'-0" SPAN, (2) ML12 6'-0" TO 9'-0" SPAN WHERE BEAM SIZES ARE NOT SPECIFIED ON PLANS. ANY SPANS LARGER THAN 9'-0" SUPPORITNG FRAMING AND NOT SPECIFIED ON PLANS SHALL BE NOTIFIED TO ENGINEER IMMEDIATELY.
20. PROVIDE MIN. DOUBLE JOISTS OR SPECIAL FLOOR TRUSS UNDER (2) 2x POSTS AND (2) PLY MICROLAM LVL OR SPECIAL FLOOR TRUSS TO MATCH FLOOR THICKNESS UNDER (3) 2x POSTS UNLESS NOTED OTHERWISE ON THE PLAN. CONTRACTOR SHALL NOTIFY ENGINEER FOR SUPPORTING STRUCTURAL MEMBER FOR ALL OTHER POST SIZES COMING FROM ABOVE.
21. PROVIDE MIN. (3) 2x POST UNDER BEAMS UNLESS NOTED OTHERWISE.
22. ALL POSTS SHALL CONTINUE DOWN TO FOUNDATION OR STRUCTURAL MEMBER SUCH AS BEAM/GIRDER TRUSS BELOW.
23. PROVIDE MIN. 3 JACK STUDS + 2 KING STUDS AT ALL HEADERS UNLESS NOTED OTHERWISE.
24. ALL WALL STUDS SHALL SPF#2 AND SHALL BE SPACED AT MAX. 16" O.C. UNLESS NOTED OTHERWISE.
25. ALL TWO STORY HIGH WALLS SHALL BE (2) 2x6 SPF#2 BALLOON FRAMED UNLESS NOTED OTHERWISE.
26. PROVIDE FULL HEIGHT BLOCKING BETWEEN JOISTS UP TO THREE JOIST BAYS WHERE JOISTS ARE PARALLEL TO FOUNDATION WALL.

PLAN LEGENDS & SYMBOLS:

- INDICATES BEARING WALL
- INDICATES DRAIN HOLE FROM ABOVE
- INDICATES JOIST/TRUSS HANEGR (REFER TO SHOP DWGS)
- INDICATES FRAMING DIRECTION
- INDICATES REBAR DIRECTION
- (_J+_S) — INDICATES NO. OF KING STUDS AT EACH END; INDICATES NO. OF JACK STUDS AT EACH END
- WF?? — INDICATES WALL FOOTING; WIDTH OF WALL FOOTING IN INCHES
- TS?? — INDICATES THICKENED SLAB; WIDTH OF THICKENED SLAB IN INCHES
- Fx.x — INDICATES ISOLATED COLUMN FOOTING; INDICATES SIZE OF FOOTING IN DECIMAL FEET
- ML?? — MICROLAM LVL 2.0E; DEPTH OF MICROLAM LVL IN INCHES
- LSL?? — LAMINATED STRAND LUMBER 1.7E; DEPTH OF TIMBERSTAND LSL BEAM IN INCHES
- PSL?? — PARALLAM STRAND LUMBER 2.0E; WIDTHxDEPTH OF MEMBER
- CC — COLUMN CAP
- CB — COLUMN BASE
- HD — HOLD DOWN ANCHOR
- MS — METAL STRAP
- H — JOIST/TRUSS/BEAM HANGER
- HC — HURRICANE CLIPS

MICROLAM LVL BEAM SCHEDULE

MARK	DESCRIPTION
(2) ML10	(2) 1 3/4" x 9 1/2" LVL - 1.9E
(2) ML12	(2) 1 3/4" x 11 7/8" LVL - 1.9E
(2) ML14	(2) 1 3/4" x 14" LVL - 1.9E
(3) ML10	(3) 1 3/4" x 9 1/2" LVL - 1.9E
(3) ML12	(3) 1 3/4" x 11 7/8" LVL - 1.9E
(3) ML14	(3) 1 3/4" x 14" LVL - 1.9E
(4) ML12	(4) 1 3/4" x 11 7/8" LVL - 1.9E

STEEL COLUMN SCHEDULE

MARK	DESCRIPTION
PIPE3-STD	3" Ø STANDARD STEEL PIPE COLUMN
PIPE3.5-ADJ-11GA	3.50 x 11GA. ADJUSTABLE STEEL PIPE COLUMN
PIPE3.5-STD	3 1/2"Ø STANDARD STEEL PIPE COLUMN
PIPE4-STD	4"Ø STANDARD STEEL PIPE COLUMN

© COPYRIGHT 2016
Structural Engineering content of this drawings are property of structBIM LLC and are issued for this project only. Any re-use or re-production of these drawings shall not be done without written consent of structBIM LLC. These drawings are to be read in conjuction with project specifications and drawings from other consultants. These drawings shall not be used as shop drawings. Do not scale drawings, use dimensions as specified.

GTM ARCHITECTS

7735 OLD GEORGETOWN ROAD
SUITE 700
BETHESDA, MD 20814
(240)333-2000
(240)333-2001 FAX
WWW.GTMARCHITECTS.COM

GTM

Seal

STATE OF MARYLAND — KAMAL KHALIL — 40082 — PROFESSIONAL ENGINEER

Consultant

structBIM ENGINEERS
WE DESIGN....WE BIM
46400 BENEDICT DR, SUITE #211
PHONE: 703-657-4481
E-MAIL: info@structBIM.com

Project

19 HIGH STREET, LOT 1
BROOKVILLE, MD 20833

I certify that these documents were prepared or approved by me, and that I am a duly licensed Professional Engineer under the laws of the State of Maryland, license number 40082. Expiration Date: 02-13-2023.

Issue Description	*Date*

structBIM Project No.	21-0243
Checked By	KK
Drawn By	KK
Scale	1/4" = 1'-0"

Sheet Title
SECOND FLOOR FRAMING PLAN

Sheet No.

S2

COPYRIGHT, 2016 structBIMEngineers, LLC.
PLOTTED ON: 4/15/2022 12:45:29 PM

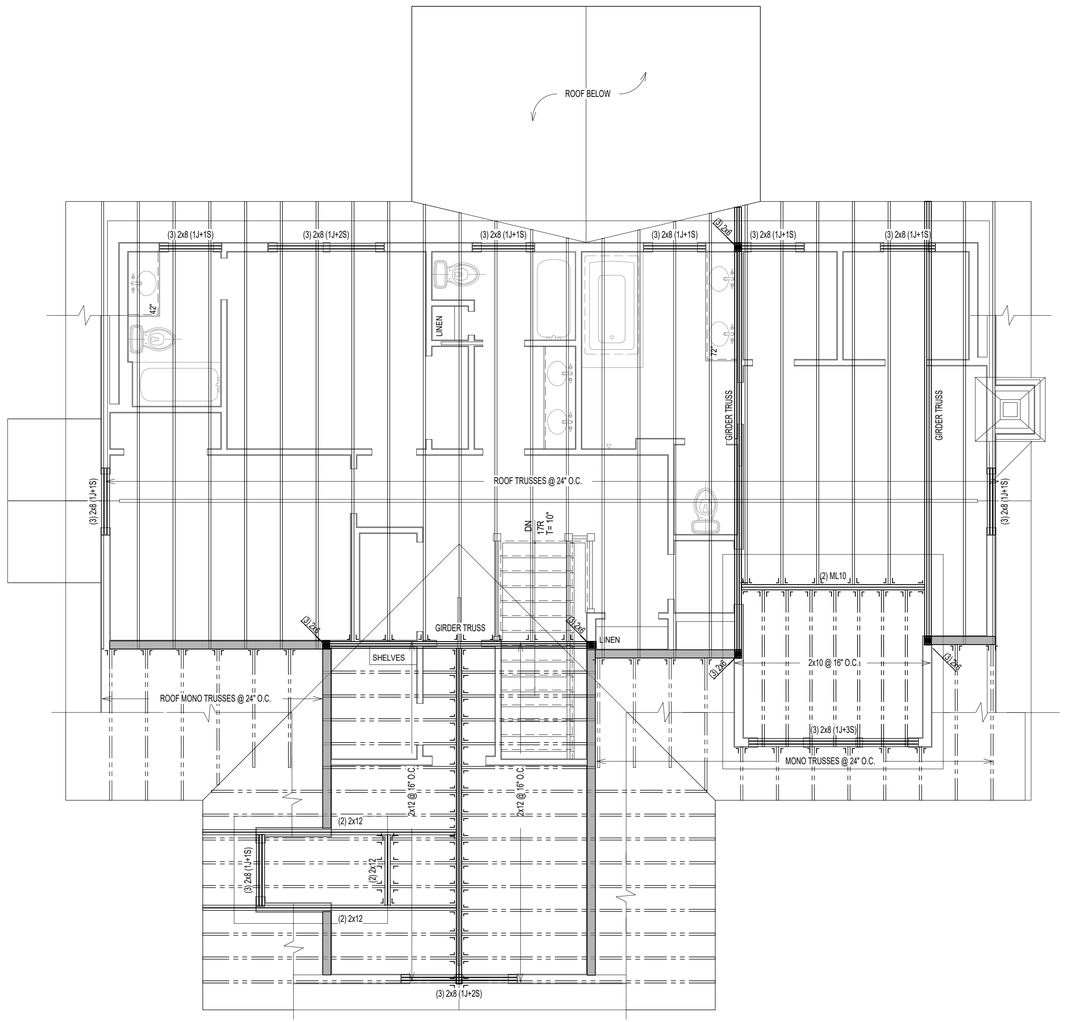

1 / S3 LOFT FLOOR FRAMING PLAN

SCALE: 1/4" = 1'-0"

NOTES:

1. ALL TRUSSES SHALL BE PRE-FABRICATED ENGINEERED ROOF TRUSSES AND SHALL BE INSTALLED PER TRUSS MANUFACTURER'S LAYOUT AND DESIGN. SUBMIT SIGNED AND SEALED SHOP DRAWINGS FOR REVIEW.
2. ALL ROOF SHEATHING SHALL BE APA RATED 7/16" C.C. C-D OR STRUCTURAL II WITH SPAN RATING OF 48/24 PER "AMERICAN PLYWOOD ASSOCIATION". PROVIDE MIN. NAILING PATTERN W/ 8d COMMON NAILS @ 6" O.C. ON EDGES AND 12" O.C. IN FIELD. PROVIDE PLYWOOD CLIPS AT PLYWOOD EDGES BETWEEN EACH FRAMING MEMBER.
3. TRUSS LAYOUT SHOWN ON THESE DRAWINGS ARE FOR SCHEMATIC PURPOSES ONLY AND TO REFLECT DESIGN INTENT FOR OTHER FRAMING MEMBERS. THESE DRAWINGS SHALL NOT BE CONSIDERED AS SHOP DRAWINGS. TRUSS DESIGN DRAWINGS PREPARED BY TRUSS MANUFACTURER SHALL BE USED FOR TRUSS LAYOUT AND COORDINATION. NOTIFY ENGINEER IF VARIATION IS MADE IN TRUSS DESIGN DRAWINGS THAT AFFECTS ORIGINAL DESIGN INTENT.
4. COORDINATE ROOF SLOPES, VALLEYS, HEEL HEIGHTS WITH ARCHITECTURAL DRAWINGS.
5. INSTALL MINIMUM H2.5A HURRICANE CLIPS AT EACH TRUSS BEARING UNLESS SPECIFIED ON SHOP DRAWINGS.
6. AT ALL NON LOAD BEARING WALLS MAINTAIN 1/4" GAP BETWEEN BOTTOM OF TRUSS BOTTOM CHORD AND TOP OF TOP PLATE. INSTALL SIMPSON "STC" TRUSS CLIPS TO MAINTAIN GAP TO ALLOW TRUSS MOVEMENT.
7. ALL SECTIONS/DETAIL CUTS MARKED AS TYP. SHALL BE APPLIED AT ALL SIMILAR CONDITIONS ON ENTIRE PLAN.
8. TRUSS MANUFACTURER TO DESIGN NECESSARY TEMPORARY/PERMENANT BRACING AND SHALL SPECIFY ON SHOP DRAWINGS.
9. TRUSS MANUFACTURER TO SPECIFY NECESSARY CONNECTORS AND FASTENERS FOR ALL CONNECTIONS INCLUDING BUT NOT LIMITED TO UPLIFT CONNECTORS, HANGERS.
10. PROVIDE SOLID BLOCKING OF SAME SIZE WITHIN FLOOR SYSTEM UNDER ALL JACK STUDS, KING STUDS & POSTS FROM ABOVE.
11. PROVIDE MIN. (3) 2x POST UNDER ALL GIRDER TRUSSES UNLESS NOTED OTHERWISE.
12. PROVIDE MIN. TWO JACK STUDS + TWO KING STUDS AT ALL HEADERS UNLESS NOTED OTHERWISE.
13. ALL WALL STUDS SHALL BE SPF#2 OR EQ. APPROVED AND SPACED AT MAX. 16" O.C. UNLESS NOTED OTHERWISE.

PLAN LEGENDS & SYMBOLS:

- INDICATES BEARING WALL
- INDICATES DRAIN HOLE FROM ABOVE
- INDICATES JOIST/TRUSS HANEGR (REFER TO SHOP DWGS)
- INDICATES FRAMING DIRECTION
- INDICATES REBAR DIRECTION
- (_J+_S) — INDICATES NO. OF KING STUDS AT EACH END; INDICATES NO. OF JACK STUDS AT EACH END
- WF?? — INDICATES WALL FOOTING; WIDTH OF WALL FOOTING IN INCHES
- TS?? — INDICATES THICKENED SLAB; WIDTH OF THICKENED SLAB IN INCHES
- Fx.x — INDICATES ISOLATED COLUMN FOOTING; INDICATES SIZE OF FOOTING IN DECIMAL FEET
- ML?? — MICROLAM LVL 2.0E; DEPTH OF MICROLAM LVL IN INCHES
- LSL?? — LAMINATED STRAND LUMBER 1.7E; DEPTH OF TIMBERSTAND LSL BEAM IN INCHES
- PSL?? — PARALLAM STRAND LUMBER 2.0E; WIDTHxDEPTH OF MEMBER
- CC — COLUMN CAP
- CB — COLUMN BASE
- HD — HOLD DOWN ANCHOR
- MS — METAL STRAP
- H — JOIST/TRUSS/BEAM HANGER
- HC — HURRICANE CLIPS

MICROLAM LVL BEAM SCHEDULE

MARK	DESCRIPTION
(2) ML10	(2) 1 3/4" x 9 1/2" LVL - 1.9E
(2) ML12	(2) 1 3/4" x 11 7/8" LVL - 1.9E
(2) ML14	(2) 1 3/4" x 14" LVL - 1.9E
(3) ML10	(3) 1 3/4" x 9 1/2" LVL - 1.9E
(3) ML12	(3) 1 3/4" x 11 7/8" LVL - 1.9E
(3) ML14	(3) 1 3/4" x 14" LVL - 1.9E
(4) ML12	(4) 1 3/4" x 11 7/8" LVL - 1.9E

STEEL COLUMN SCHEDULE

MARK	DESCRIPTION
PIPE3-STD	3" Ø STANDARD STEEL PIPE COLUMN
PIPE3.5-ADJ-11GA	3.50 x 11GA. ADJUSTABLE STEEL PIPE COLUMN
PIPE3.5-STD	3 1/2"Ø STANDARD STEEL PIPE COLUMN
PIPE4-STD	4"Ø STANDARD STEEL PIPE COLUMN

© COPYRIGHT 2016
Structural Engineering content of this drawings are property of structBIM LLC and are issued for this project only. Any re-use or re-production of these drawings shall not be done without written consent of structBIM LLC. These drawings are to be read in conjuction with project specifications and drawings from other consultants. These drawings shall not be used as shop drawings. Do not scale drawings, use dimensions as specified.

GTM ARCHITECTS

7735 OLD GEORGETOWN ROAD
SUITE 700
BETHESDA, MD 20814
(240)333-2000
(240)333-2001 FAX
WWW.GTMARCHITECTS.COM

GTM

Seal

STATE OF MARYLAND — KRISHNA KANDEL — 40082 — PROFESSIONAL ENGINEER

Consultant

structBIM ENGINEERS
WE DESIGN....WE BIM
46400 BENEDICT DR, SUITE #211
PHONE: 703-657-4481
E-MAIL: info@structBIM.com

Project

19 HIGH STREET, LOT 1
BROOKVILLE, MD 20833

I certify that these documents were prepared or approved by me, and that I am a duly licensed Professional Engineer under the laws of the State of Maryland, license number 40082. Expiration Date: 02-13-2023.

Issue Description	*Date*

structBIM Project No. 21-0243
Checked By KK
Drawn By KK
Scale 1/4" = 1'-0"

Sheet Title

ROOF FRAMING PLAN

Sheet No.

S3

COPYRIGHT, 2016 structBIMEngineers, LLC.

PLOTTED ON: 4/15/2022 12:45:32 PM

FILE NAME:

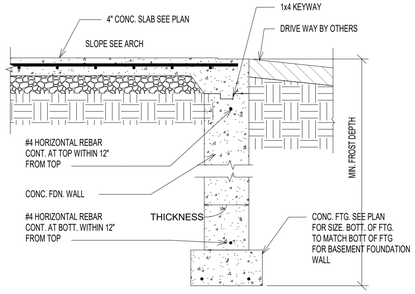

11 SD0 FOUNDATION WALL @ GARAGE ENTRY
SCALE: 3/4" = 1'-0"

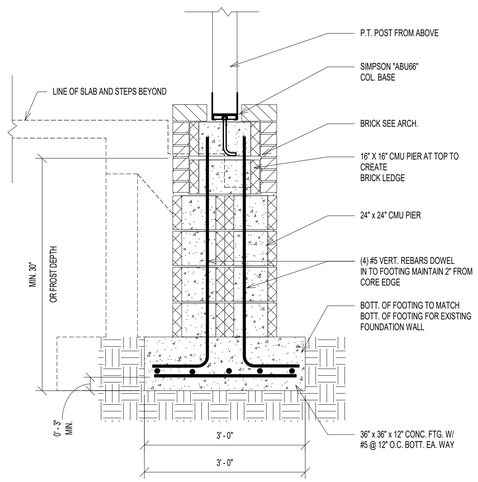

12 SD0 PIER FOOTING FOR DECK POST
SCALE: 3/4" = 1'-0"

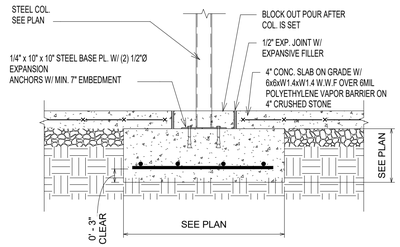

8 SD0 ISOLATED COLUMN FOOTING
SCALE: 3/4" = 1'-0"

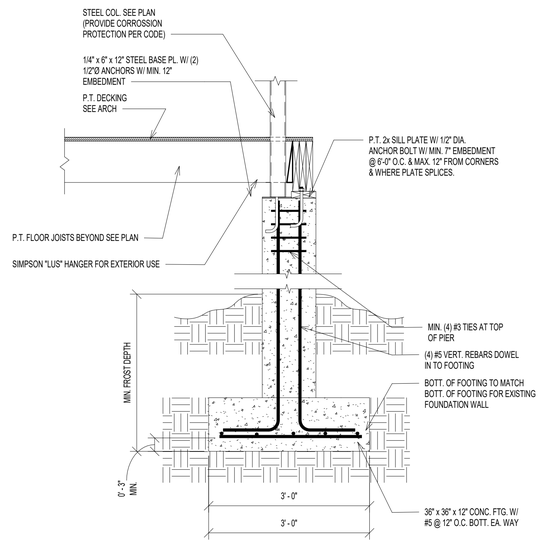

9 SD0 FNDN_PIER_STLCOL+WDBM
SCALE: 3/4" = 1'-0"

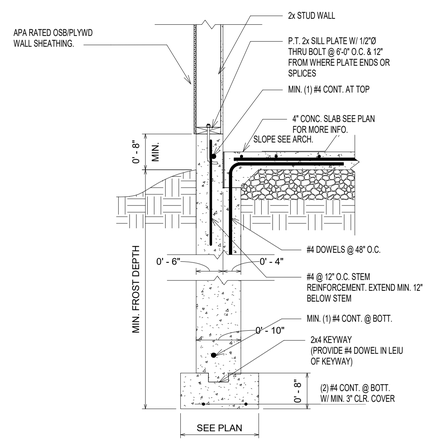

10 SD0 TYP. FOUNDATION WALL @ GARAGE W/ SIDING
SCALE: 3/4" = 1'-0"

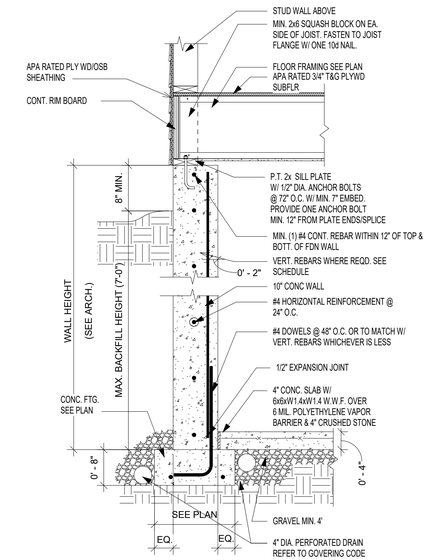

5 SD0 TYP. FOUNDATION WALL SECTION (JOISTS PERPENDICULAR)
SCALE: 3/4" = 1'-0"

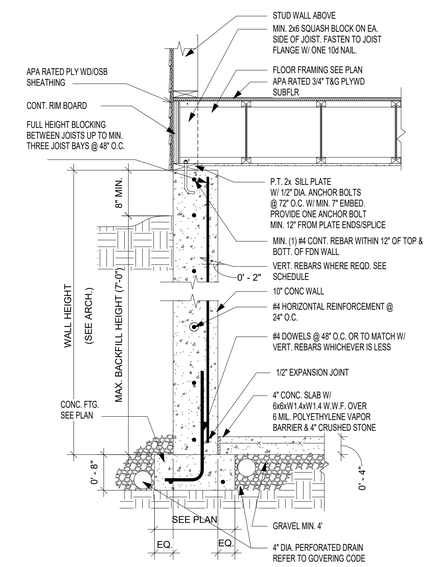

6 SD0 TYP. FOUNDATION WALL SECTION (JOISTS PARALLEL)
SCALE: 3/4" = 1'-0"

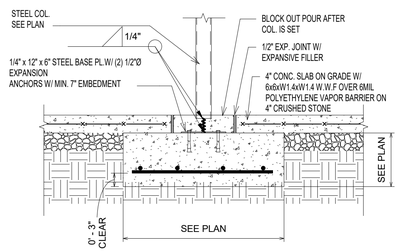

7 SD0 ISOLATED COLUMN FOOTING
SCALE: 3/4" = 1'-0"

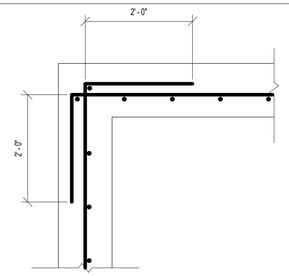

TYP. CORNER REINFORCEMENT DETAIL (PLAN VIEW)

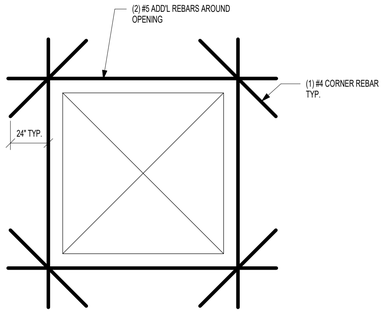

TYP. REINFORCEMENT AROUND OEPNING(ELEVATION VIEW)

1 SD0 TYP. REINFORCEMENT AT WALL CORNER & OPENING
SCALE: 3/4" = 1'-0"

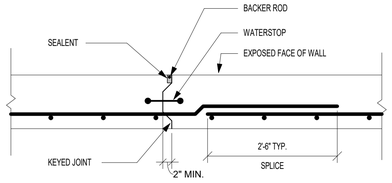

NOTE: PROVIDE CONSTRUCTION OR CONTROL JOINTS IN FOUNDATION WALLS AT EVERY 40'-0" TYPICAL

2 SD0 TYP. CONTROL JOINT @ FOUNDATION WALL
SCALE: 3/4" = 1'-0"

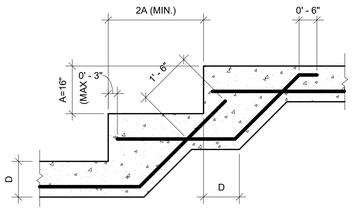

NOTE: SEE PLAN FOR REINFORCING AND OTHER INFO.

3 SD0 TYP. STEPPED FOOTING DETAIL
SCALE: 1/2" = 1'-0"

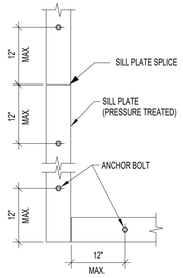

NOTES:

1. MINIMUM SILL BOLTING TO CONCRETE SHALL BE 1/2"Ø ANCHOR BOLTS, OR EQUAL, AT 6'-0" O.C. WITH 7" MINIMUM EMBEDMENT.

2. ALL ANCHORS FOR SILL PLATES SUPPORTING SHEAR WALLS (SW) SHALL HAVE MIN. 3"x3" STEEL WASHERS AND SHALL EXTEND A MINIMUM OF 2" ABOVE TOP OF SILL.

3. PROVIDE MINIMUM (2) BOLTS PER PIECE.

4. SEE OTHER DETAILS FOR USE OF MUDSILL ANCHORS IN LIEU OF ANCHOR BOLTS.

4 SD0 TYP. SILL PLATE ANCHORAGE
SCALE: 3/4" = 1'-0"

© COPYRIGHT 2016
Structural Engineering content of this drawings are property of structBIM LLC and are issued for this project only. Any re-use or re-production of these drawings shall not be done without written consent of structBIM LLC. These drawings are to be read in conjuction with project specifications and drawings from other consultants. These drawings shall not be used as shop drawings. Do not scale drawings, use dimensions as specified.

GTM ARCHITECTS

7735 OLD GEORGETOWN ROAD
SUITE 700
BETHESDA, MD 20814
(240)333-2000
(240)333-2001 FAX
WWW.GTMARCHITECTS.COM

GTM

Seal

Consultant

structBIM ENGINEERS
WE DESIGN....WE BIM
46400 BENEDICT DR, SUITE #211
PHONE: 703-657-4481
E-MAIL: info@structBIM.com

Project

19 HIGH STREET, LOT 1
BROOKVILLE, MD 20833

I certify that these documents were prepared or approved by me, and that I am a duly licensed Professional Engineer under the laws of the State of Maryland, license number 40082, Expiration Date: 02-13-2023.

Issue Description	*Date*

structBIM Project No.	21-0243
Checked By	KK
Drawn By	KK
Scale	As indicated

Sheet Title

FOUNDATION DETAILS

Sheet No.

SD0

COPYRIGHT, 2016 structBIMEngineers, LLC.

PLOTTED ON: 4/15/2022 12:45:37 PM
FILE NAME:

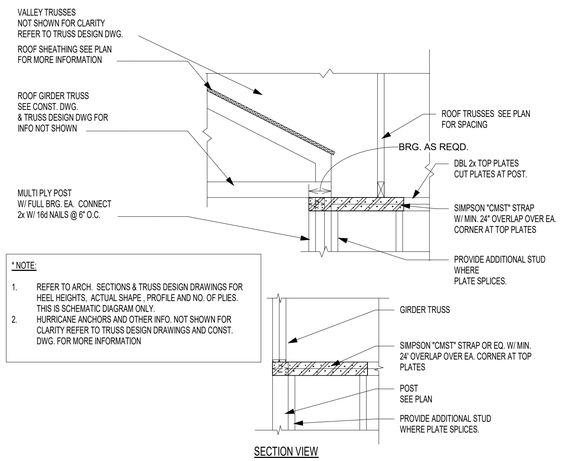

* NOTE:

1. REFER TO ARCH. SECTIONS & TRUSS DESIGN DRAWINGS FOR HEEL HEIGHTS, ACTUAL SHAPE , PROFILE AND NO. OF PLIES. THIS IS SCHEMATIC DIAGRAM ONLY.
2. HURRICANE ANCHORS AND OTHER INFO. NOT SHOWN FOR CLARITY REFER TO TRUSS DESIGN DRAWINGS AND CONST. DWG. FOR MORE INFORMATION

10 / SD1 G.T. W/ FULL BRG ON POST @ CORNER
SCALE: 3/4" = 1'-0"

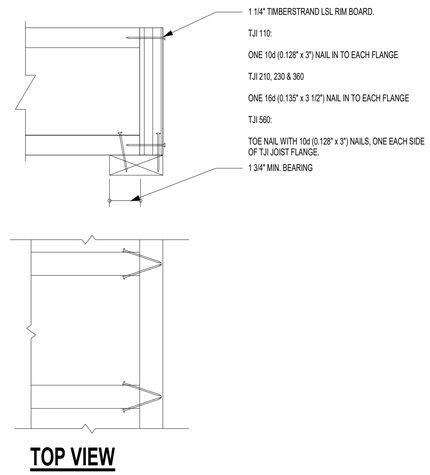

7 / SD1 RIM TO TJI JOIST CONNECTION
SCALE: 3/4" = 1'-0"

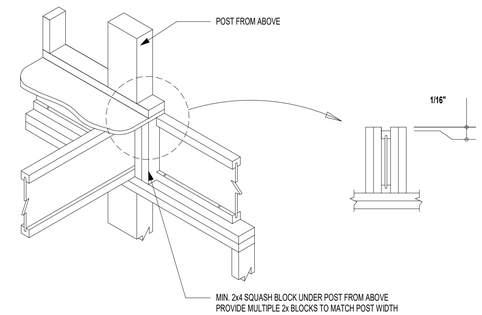

4 / SD1 JOISTS BRG @ EXT. WALL W/ POST ABOVE
SCALE: 3/4" = 1'-0"

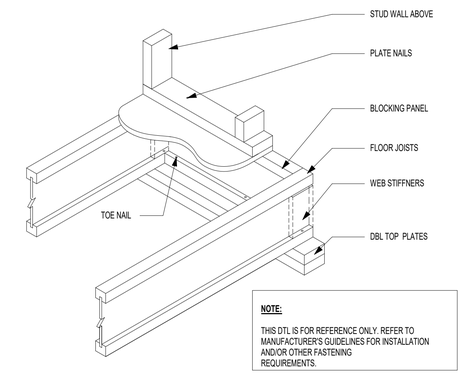

NOTE:

THIS DTL IS FOR REFERENCE ONLY. REFER TO MANUFACTURER'S GUIDELINES FOR INSTALLATION AND/OR OTHER FASTENING REQUIREMENTS.

1 / SD1 I JOIST WITH BRG WALL ABOVE
SCALE: 3/4" = 1'-0"

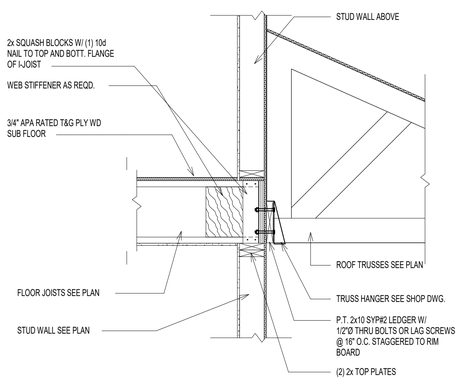

11 / SD1 SECTION @ PORCH
SCALE: 3/4" = 1'-0"

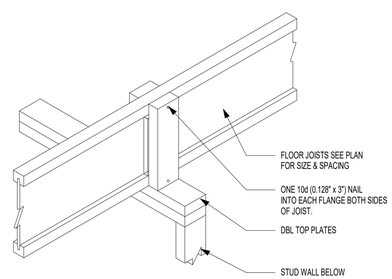

8 / SD1 TYP. SQUASH BLOCKS DETAIL
SCALE: 3/4" = 1'-0"

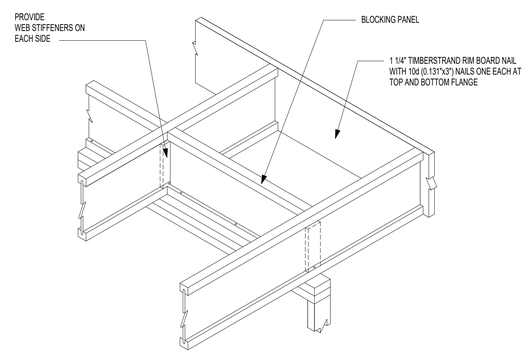

DO NOT CUT FLANGES OR WEB

5 / SD1 CANTILEVER JOIST DETAIL
SCALE: 3/4" = 1'-0"

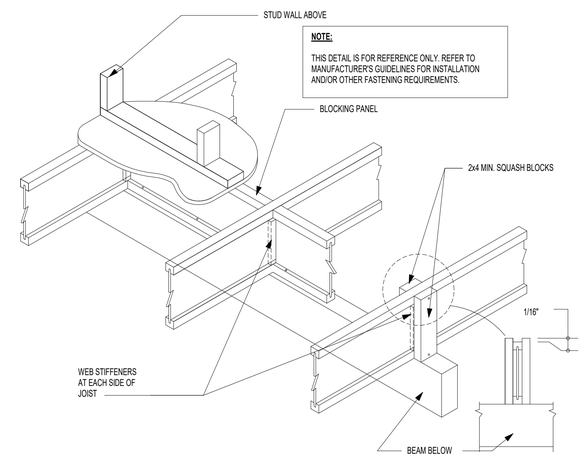

NOTE:

THIS DETAIL IS FOR REFERENCE ONLY. REFER TO MANUFACTURER'S GUIDELINES FOR INSTALLATION AND/OR OTHER FASTENING REQUIREMENTS.

2 / SD1 JOIST W/ INT. BRG. ON BEAM & BRG. WALL FROM ABOVE
SCALE: 3/4" = 1'-0"

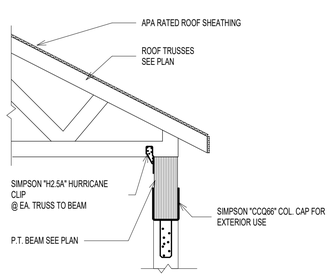

12 / SD1 SECTION AT PORCH ROOF
SCALE: 3/4" = 1'-0"

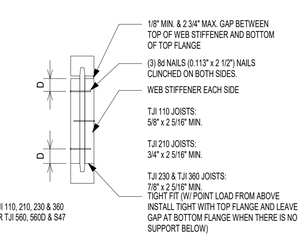

TJI JOIST SERIES	DEPTH	MINIMUM WEB STIFFENER SIZE	NAILING		
			TYPE	END	INTERMEDIATE
110	ALL	5/8" x 2 5/16"	8d (0.113" x 2 1/2")	3	3
210	ALL	3/4" x 2 5/16"			
230 & 360	ALL	7/8" x 2 5/16"			

9 / SD1 TYP. I JOIST WEB STIFFENER SCHEDULE
SCALE: 3/4" = 1'-0"

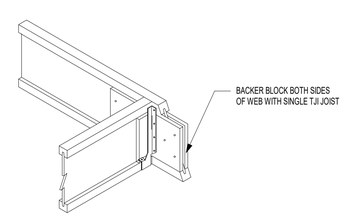

TJI	110		210		230 OR 360		560	
DEPTH	9 1/2" OR 11 7/8"	14"	9 1/2" OR 11 7/8"	14" OR 16"	9 1/2" OR 11 7/8"	14" OR 16"	11 7/8"	14" OR 16"
FILLER BLOCK (1)	2x6	2x8	2x6 + 3/8" SHEATHING	2x8 + 3/8" SHEATHING	2x6 + 1/2" SHEATHING	2x8 + 1/2" SHEATHING	(2) 2x6	(2) 2x8
BACKER BLOCK (1)	5/8" OR 3/4"		3/4" OR 7/8"		7/8" OR 1" NET		2x6	2x8

6 / SD1 SINGLE JOIST TO SINGLE JOIST CONNECTION
SCALE: 3/4" = 1'-0"

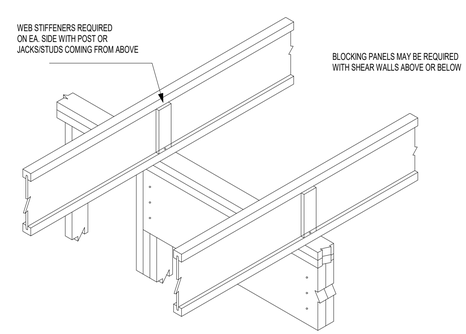

3 / SD1 INTERMEDIATE BEARING
SCALE: 3/4" = 1'-0"

© COPYRIGHT 2016
Structural Engineering content of this drawings are property of structBIM LLC and are issued for this project only. Any re-use or re-production of these drawings shall not be done without written consent of structBIM LLC. These drawings are to be read in conjuction with project specifications and drawings from other consultants. These drawings shall not be used as shop drawings. Do not scale drawings, use dimensions as specified.

GTM ARCHITECTS

7735 OLD GEORGETOWN ROAD
SUITE 700
BETHESDA, MD 20814
(240)333-2000
(240)333-2001 FAX
WWW.GTMARCHITECTS.COM

GTM

Seal

STATE OF MARYLAND
KAMAL KHALSA
40082
PROFESSIONAL ENGINEER

Consultant

structBIM ENGINEERS
WE DESIGN....WE BIM
46400 BENEDICT DR, SUITE #211
PHONE: 703-657-4481
E-MAIL: info@structBIM.com

Project

19 HIGH STREET, LOT 1
BROOKVILLE, MD 20833

I certify that these documents were prepared or approved by me, and that I am a duly licensed Professional Engineer under the laws of the State of Maryland, license number 40082, Expiration Date: 02-13-2023.

Issue Description	*Date*

structBIM Project No.	21-0243
Checked By	KK
Drawn By	KK
Scale	3/4" = 1'-0"

Sheet Title

FRAMING DETAILS

Sheet No.

SD1

COPYRIGHT, 2016 structBIMEngineers, LLC.
PLOTTED ON: 4/15/2022 12:45:39 PM

FILE NAME:

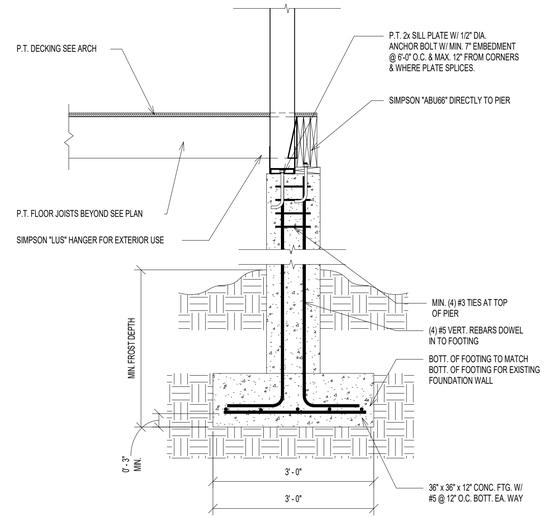

12 / SD2 DETAIL2
SCALE: 3/4" = 1'-0"

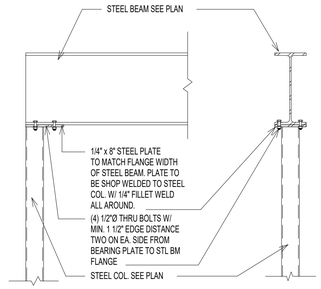

9 / SD2 STEEL BEAM - COL DETAIL @ END
SCALE: 3/4" = 1'-0"

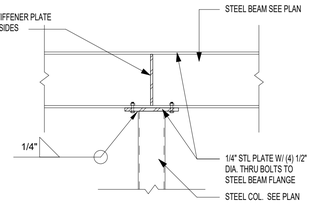

10 / SD2 STEEL BEAM TO STEEL COLUMN - INT. SUPPORT
SCALE: 3/4" = 1'-0"

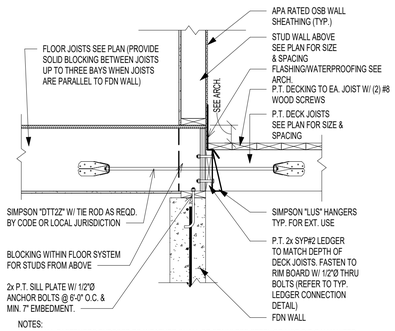

NOTES:
1. ALL FASTENERS EXPOSED TO WEATHER SHALL BE STAINLESS STEEL OR HOT-DIP GALVANIZED OR APPROVED BY MANUFACTURER FOR EXTERIOR USE.

DECK CONNECTORS TABLE (SIMPSON "DTT2Z OR EQ. APPROVED)				
DECK SIZE	6'-0" x 4'-0"	8'-0" x 4'-0"	12'-0" x 10'-0"	20'-0" x 10'-0"
NO. OF CONNECTORS	2	2	2	3

NOTES:
1. NO. OF CONNECTORS SHALL BE PROVIDED SUCH THAT ALL CONNECTORS ARE EQUALLY SPACED.
2. MIN. ONE CONNECTOR SHALL BE PROVIDED AT EACH END OF DECK.

11 / SD2 TYP. DECK CONNECTION DETAIL
SCALE: 3/4" = 1'-0"

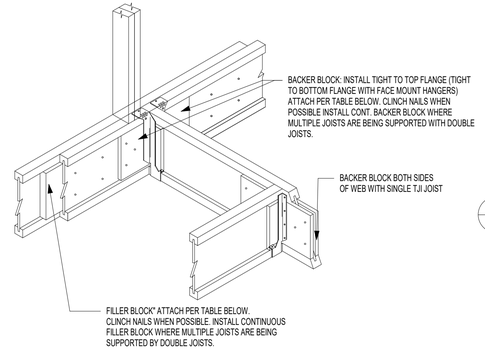

TJI	110		210		230 OR 360		560	
DEPTH	9 1/2" OR 11 7/8"	14"	9 1/2" OR 11 7/8"	14" OR 16"	9 1/2" OR 11 7/8"	14" OR 16"	11 7/8"	14" OR 16"
FILLER BLOCK (1)	2x6	2x8	2x6 + 3/8" SHEATHING	2x6 + 3/8" SHEATHING	2x6 + 1/2" SHEATHING	2x8 + 1/2" SHEATHING	(2) 2x6	(2) 2x8
BACKER BLOCK (1)	5/8" OR 3/4"		3/4" OR 7/8"		7/8" OR 1" NET		2x6	2x8

5 / SD2 TYPICAL DBL JOISTS CONNECTION W/ JOIST SUPPORTED
SCALE: 3/4" = 1'-0"

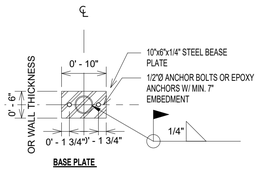

6 / SD2 TYP. STL. BASE PLATE DETAIL FOR STL COL.
SCALE: 3/4" = 1'-0"

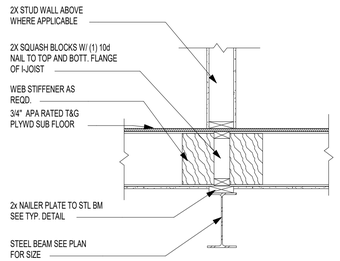

7 / SD2 TYP. STEEL BEAM NAILER PLATE CONNECTION
SCALE: 3/4" = 1'-0"

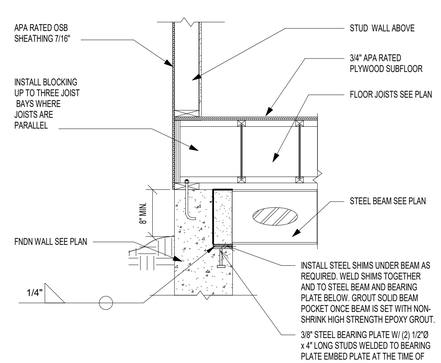

8 / SD2 TYP. STEEL BEAM NAILER PLATE CONNECTION
SCALE: 3/4" = 1'-0"

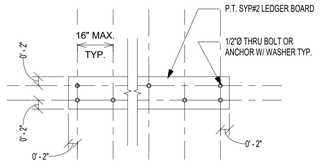

1 / SD2 TYP. DECK CONNECTION DETAIL
SCALE: 3/4" = 1'-0"

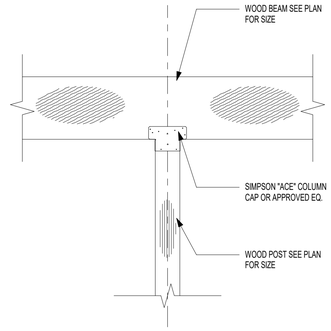

2 / SD2 INTERIOR POST W/ COL. CAP CONN.
SCALE: 3/4" = 1'-0"

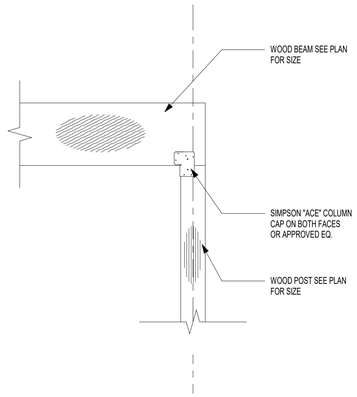

3 / SD2 END COL. TO BEAM BEARING CONNECTION
SCALE: 3/4" = 1'-0"

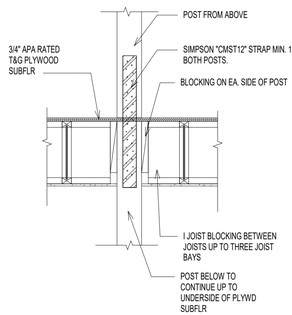

4 / SD2 TYP. POST TO POST CONNECTION
SCALE: 3/4" = 1'-0"

© COPYRIGHT 2016
Structural Engineering content of this drawings are property of structBIM LLC and are issued for this project only. Any re-use or re-production of these drawings shall not be done without written consent of structBIM LLC. These drawings are to be read in conjuction with project specifications and drawings from other consultants. These drawings shall not be used as shop drawings. Do not scale drawings, use dimensions as specified.

GTM ARCHITECTS
7735 OLD GEORGETOWN ROAD
SUITE 700
BETHESDA, MD 20814
(240)333-2000
(240)333-2001 FAX
WWW.GTMARCHITECTS.COM

Seal

Consultant

structBIM ENGINEERS
WE DESIGN....WE BIM
46400 BENEDICT DR, SUITE #211
PHONE: 703-657-4481
E-MAIL: info@structBIM.com

Project

19 HIGH STREET, LOT 1
BROOKVILLE, MD 20833

I certify that these documents were prepared or approved by me, and that I am a duly licensed Professional Engineer under the laws of the State of Maryland, license number 40082, Expiration Date: 02-13-2023.

Issue Description	Date

structBIM Project No.	21-0243
Checked By	KK
Drawn By	KK
Scale	3/4" = 1'-0"

Sheet Title
FRAMING DETAILS

Sheet No.
SD2

COPYRIGHT, 2016 structBIMEngineers, LLC.
PLOTTED ON: 4/15/2022 12:45:41 PM

Point Load Connector Spacing
8- Screw Connection

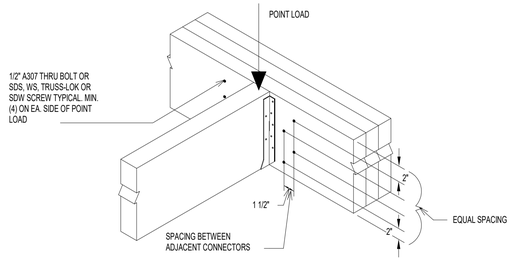

2 / SD3 LVL BEAM CONNECTION AT POINT LOAD
SCALE: 3/4" = 1'-0"

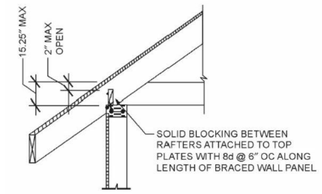

3 / SD3 TYPICAL ROOF BEARING @ BRACED WALL PANEL
SCALE: 3/4" = 1'-0"

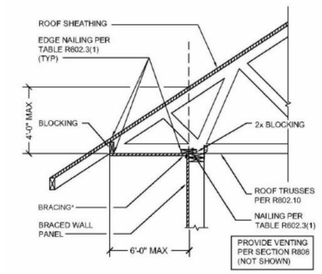

4 / SD3 TYPICAL ROOF BEARING @ BRACED WALL PANEL
SCALE: 3/4" = 1'-0"

ALLOWABLE HOLES

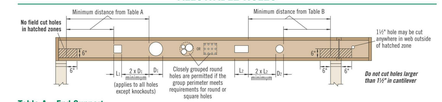

Table A—End Support

Minimum distance from edge of hole to inside face of nearest end support

Depth	TJI®	Round Hole Size 2"	3"	4"	5"	6½"	7"	8½"	11"	13"	Square or Rectangular Hole Size 2"	3"	4"	5"	6½"	7"	8½"	11"	13"
9½"	110	1'-6"	1'-6"	2'-0"	2'-6"	5'-0"					1'-0"	1'-6"	2'-6"	3'-6"	4'-6"				
	210	1'-0"	1'-0"	2'-0"	3'-0"	5'-0"					1'-0"	1'-0"	2'-0"	2'-6"	4'-0"	5'-0"			
	230	1'-0"	2'-0"	2'-6"	3'-6"	5'-0"					1'-0"	2'-0"	3'-0"	4'-0"	5'-0"				
11¾"	110	1'-0"	1'-0"	1'-0"	1'-0"	2'-6"	2'-6"	5'-0"			1'-0"	1'-0"	1'-6"	2'-6"	4'-0"	4'-0"	6'-0"		
	210	1'-0"	1'-0"	1'-0"	1'-6"	2'-6"	3'-0"	5'-0"			1'-0"	1'-0"	2'-0"	3'-0"	5'-0"	5'-0"	6'-0"		
	230	1'-0"	1'-0"	1'-0"	2'-0"	3'-0"	3'-6"	6'-0"			1'-0"	1'-0"	2'-0"	3'-0"	5'-0"	5'-0"	7'-0"		
	360	1'-0"	1'-0"	1'-6"	2'-6"	4'-6"	5'-0"	7'-0"			1'-0"	1'-0"	2'-6"	4'-0"	6'-0"	6'-0"	7'-0"		
	560	1'-0"	1'-0"	1'-6"	3'-0"	5'-0"	5'-6"	8'-0"			1'-0"	2'-0"	3'-6"	5'-0"	7'-0"	7'-0"	8'-0"		
14"	110	1'-0"	1'-0"	1'-0"	1'-0"	1'-0"	1'-0"	2'-6"	5'-0"		1'-0"	1'-0"	1'-0"	1'-6"	3'-6"	4'-0"	6'-0"	8'-0"	
	210	1'-0"	1'-0"	1'-0"	1'-0"	1'-0"	1'-6"	3'-0"	6'-0"		1'-0"	1'-0"	1'-0"	2'-0"	4'-0"	4'-0"	6'-0"	8'-0"	
	230	1'-0"	1'-0"	1'-0"	1'-0"	1'-6"	2'-0"	3'-6"	6'-6"		1'-0"	1'-0"	1'-0"	2'-0"	4'-0"	5'-0"	7'-0"	9'-0"	
	360	1'-0"	1'-0"	1'-0"	1'-0"	2'-6"	3'-0"	5'-0"	8'-0"		1'-0"	1'-0"	1'-0"	2'-6"	5'-0"	6'-0"	8'-0"	9'-6"	
	560	1'-0"	1'-0"	1'-0"	1'-0"	2'-6"	3'-0"	6'-0"	9'-0"		1'-0"	1'-0"	1'-6"	3'-0"	6'-0"	7'-0"	9'-0"	10'-0"	
16"	210	1'-0"	1'-0"	1'-0"	1'-0"	1'-0"	1'-0"	1'-6"	3'-0"	6'-0"	1'-0"	1'-0"	1'-0"	1'-0"	2'-6"	3'-0"	6'-0"	8'-0"	10'-6"
	230	1'-0"	1'-0"	1'-0"	1'-0"	1'-0"	1'-0"	2'-0"	4'-0"	6'-6"	1'-0"	1'-0"	1'-0"	1'-0"	3'-0"	3'-6"	7'-0"	9'-0"	11'-0"
	360	1'-0"	1'-0"	1'-0"	1'-0"	1'-0"	1'-0"	2'-6"	5'-0"	8'-0"	1'-0"	1'-0"	1'-0"	1'-0"	4'-0"	5'-0"	9'-0"	10'-0"	11'-6"
	560	1'-0"	1'-0"	1'-0"	1'-0"	1'-0"	1'-0"	3'-0"	6'-6"	10'-0"	1'-0"	1'-0"	1'-0"	1'-6"	5'-0"	6'-0"	10'-0"	11'-0"	12'-0"

Table B—Intermediate or Cantilever Support

Minimum distance from edge of hole to inside face of nearest intermediate or cantilever support

Depth	TJI®	Round Hole Size 2"	3"	4"	5"	6½"	7"	8½"	11"	13"	Square or Rectangular Hole Size 2"	3"	4"	5"	6½"	7"	8½"	11"	13"
9½"	110	1'-6"	2'-6"	3'-6"	4'-6"	7'-6"					1'-6"	2'-6"	3'-6"	5'-6"	8'-6"				
	210	2'-6"	2'-6"	3'-6"	4'-6"	7'-6"					2'-6"	3'-0"	4'-0"	6'-0"	7'-0"				
	230	2'-6"	3'-0"	4'-0"	5'-0"	8'-0"					2'-6"	3'-0"	4'-6"	6'-6"	7'-6"				
11¾"	110	1'-0"	1'-0"	1'-6"	2'-6"	4'-0"	4'-0"	8'-0"			1'-0"	1'-6"	2'-6"	4'-0"	6'-6"	7'-0"	9'-0"		
	210	1'-0"	1'-0"	2'-0"	3'-0"	4'-6"	5'-0"	9'-0"			1'-0"	2'-0"	3'-0"	4'-6"	7'-6"	8'-0"	10'-0"		
	230	1'-0"	2'-0"	2'-6"	3'-6"	5'-0"	5'-6"	9'-6"			1'-0"	2'-6"	3'-6"	5'-0"	8'-0"	8'-6"	10'-0"		
	360	2'-0"	2'-0"	4'-0"	5'-0"	7'-0"	7'-6"	11'-0"			2'-0"	3'-6"	5'-0"	7'-0"	9'-0"	9'-6"	11'-0"		
	560	1'-6"	3'-0"	4'-6"	5'-6"	8'-0"	8'-6"	12'-0"			3'-0"	4'-6"	6'-0"	8'-0"	10'-0"	11'-0"	12'-0"		
14"	110	1'-0"	1'-0"	1'-0"	1'-0"	2'-0"	2'-6"	4'-6"	8'-0"		1'-0"	1'-0"	1'-0"	2'-6"	5'-0"	6'-0"	9'-0"	12'-0"	
	210	1'-0"	1'-0"	1'-0"	1'-0"	2'-6"	3'-0"	5'-0"	9'-0"		1'-0"	1'-0"	2'-0"	3'-6"	6'-0"	7'-0"	10'-0"	12'-6"	
	230	1'-0"	1'-0"	1'-0"	2'-0"	3'-0"	3'-6"	5'-6"	9'-6"		1'-0"	1'-0"	2'-0"	3'-6"	6'-0"	7'-0"	10'-6"	13'-0"	
	360	1'-0"	1'-0"	2'-0"	3'-6"	5'-0"	5'-6"	8'-6"	13'-6"		1'-0"	2'-0"	3'-0"	4'-6"	7'-6"	8'-6"	12'-0"	14'-6"	
	560	1'-0"	1'-0"	1'-6"	3'-6"	5'-6"	6'-6"	9'-6"	13'-6"		1'-0"	3'-0"	5'-0"	7'-0"	10'-0"	11'-0"	13'-6"	15'-0"	
16"	210	1'-0"	1'-0"	1'-0"	1'-0"	1'-0"	1'-0"	3'-0"	5'-6"	9'-6"	1'-0"	1'-0"	1'-0"	2'-0"	3'-0"	4'-6"	9'-6"	12'-6"	15'-6"
	230	1'-0"	1'-0"	1'-0"	1'-0"	1'-0"	1'-0"	4'-0"	6'-6"	10'-6"	1'-0"	1'-0"	1'-0"	1'-0"	4'-0"	5'-0"	10'-6"	13'-0"	16'-0"
	360	1'-0"	1'-0"	1'-0"	1'-0"	3'-0"	4'-0"	6'-6"	10'-6"	13'-4"	1'-0"	1'-0"	2'-0"	4'-0"	7'-6"	8'-6"	13'-0"	14'-6"	17'-0"
	560	1'-0"	1'-0"	1'-0"	1'-0"	2'-0"	3'-6"	7'-0"	11'-0"	15'-0"	1'-0"	1'-0"	3'-6"	5'-6"	9'-0"	10'-0"	14'-6"	16'-0"	18'-0"

- Rectangular holes based on measurement of longest side.

How to Use These Tables

1. Using **Table A, Table B**, or both if required, determine the hole shape/size and select the TJI® joist and depth.
2. Scan horizontally until you intersect the correct hole size column.
3. Measurement shown is minimum distance from edge of hole to support.
4. Maintain the required minimum distance from the end **and** the intermediate or cantilever support.

General Notes

- Holes may be located vertically anywhere within the web. Leave ¼" of web (minimum) at top and bottom of hole.
- Knockouts are located in web at approximately 12" on-center; they do not affect hole placement.
- For simple span (5' minimum) uniformly loaded joists meeting the requirements of this guide, one maximum size round hole may be located at the center of the joist span **provided that no other holes occur in the joist.**
- Distances are based on the maximum uniform loads shown in this guide. For other load conditions or hole configurations, use Forte™ software or contact your iLevel representative.

1 / SD3 TYPICAL ALLOWABLE HOLE SIZES FOR I JOISTS
SCALE: 3/4" = 1'-0"

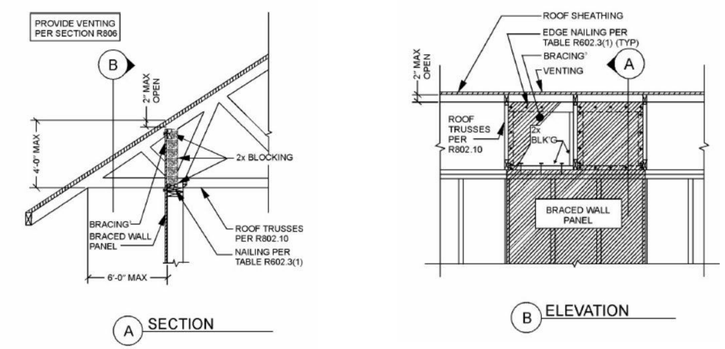

5 / SD3 TYPICAL ROOF BEARING @ BRACED WALL PANEL
SCALE: 3/4" = 1'-0"

ASSEMBLY	A	B	C	D	E	F
SKETCH	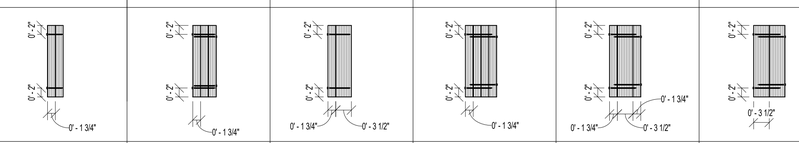					
FASTNER	SIMPSON - SDW22 x 3 5/8"	SIMPSON - SDW22 x 5"	SIMPSON - SDW22 x 5"	SIMPSON - SDW22 x 6 3/4"	SIMPSON - SDW22 x 6 3/4"	SIMPSON - SDW22 x 6 3/4"
SPACING	12" O.C.	12" O.C.	12" O.C.	12" O.C.	12" O.C.	12" O.C.
NOTE		INSTALL FASTNERS FROM BOTH SIDES STAGGER BY 3" FASTENERS FROM OPPOSITE SIDES		INSTALL FASTNERS FROM BOTH SIDES STAGGER BY 3" FASTENERS FROM OPPOSITE SIDES	INSTALL FASTNERS FROM BOTH SIDES STAGGER BY 3" FASTENERS FROM OPPOSITE SIDES	INSTALL FASTNERS FROM BOTH SIDES STAGGER BY 3" FASTENERS FROM OPPOSITE SIDES

NOTES:

1. CONTACT ENGINEER FOR ALTERNATE FASTENERS IF NEEDED.
2. NOTIFY ENGINEER IF POINT LOAD IS APPLIED ON LVL BEAMS. INSTALL MIN. 8 FASTENERS ON EITHER SIDE OF POINT LOAD WITH 2" SPACING.
3. MAINTAIN MINIMUM EDGE DISTANCE OF 6" FROM ENDS.

2A / SD3 TYP. LVL PLY CONNECTION DETAIL
SCALE: 3/4" = 1'-0"

© COPYRIGHT 2016
Structural Engineering content of this drawings are property of structBIM LLC and are issued for this project only. Any re-use or re-production of these drawings shall not be done without written consent of structBIM LLC. These drawings are to be read in conjuction with project specifications and drawings from other consultants. These drawings shall not be used as shop drawings. Do not scale drawings, use dimensions as specified.

GTM ARCHITECTS

7735 OLD GEORGETOWN ROAD
SUITE 700
BETHESDA, MD 20814
(240)333-2000
(240)333-2001 FAX
WWW.GTMARCHITECTS.COM

Seal

Consultant

structBIM ENGINEERS
WE DESIGN....WE BIM
46400 BENEDICT DR, SUITE #211
PHONE: 703-657-4481
E-MAIL: info@structBIM.com

Project

19 HIGH STREET, LOT 1
BROOKVILLE, MD 20833

I certify that these documents were prepared or approved by me, and that I am a duly licensed Professional Engineer under the laws of the State of Maryland, license number 40082, Expiration Date: 02-13-2023.

Issue Description	*Date*

structBIM Project No.	21-0243
Checked By	KK
Drawn By	KK
Scale	3/4" = 1'-0"

Sheet Title

FRAMING DETAILS

Sheet No.

SD3

COPYRIGHT, 2016 structBIMEngineers, LLC.

PLOTTED ON: 4/15/2022 12:45:44 PM

FILE NAME:

5 4 3 2 1

STANDARDS AND CODES:

- DESIGN BUILDING CODE: INTERNATIONAL RESIDENTIAL CODE 2018 EDITION, STATE OR LOCAL JURISDICTION AMENDMENTS AND/OR ORDINANCES.
- IN ADDITION TO THE REQUIREMENTS INCLUDED IN THESE PROJECT, ALL CONSTRUCTION AND MATERIAL SHALL FURTHER CONFORM TO THE APPLICABLE PROVISIONS FROM LATEST EDITION OF FOLLOWING STANDARDS/CODES AS REQUIRED BY GOVERNING CODE OR LOCAL JURISDICTION.
- ACI (AMERICAN CONCRETE INSTITUTE)-318: BUILDING CODE REQUIREMENTS FOR STRUCTURAL CONCRETE..
- ACI-332: CODE REQUIREMENTS FOR RESIDENTIAL CONCRETE CONSTRUCTION
- ACI-530: BUILDING CODE REQUIREMENTS FOR MASONRY STRUCTURES
- AISC (AMERICAN INSTITUTE OF STEEL CONSTRUCTION): STEEL CONSTRUCTION MANUAL.
- NDS: NATIONAL DESIGN SPECIFICATIONS (NOS) FOR WOOD CONSTRUCTOIN WITH SUPPLEMENT.
- WFCM: WOOD FRAME CONSTRUCTION MANUAL FOR ONE- AND TWO- FAMILY DWELLINGS.
- AFPA: AMERICAN FOREST AND PAPER ASSOCIATOIN - SPAN TABLE FOR JOISTS AND RAFTERS.
- AISI S100: NORTH AMERICAN SPECIFICATION FOR THE DESIGN OF COLD FORMED STEEL STRUCTURAL MEMBERS.
- AISI S230: STANDARD FOR COLD-FORMED STEEL FRAMING-PRESCRIPTIVE METHOD FOR ONE- AND TWO-FAMILY DWELLINGS.
- AMERICAN INSTITUTE OF TIMBER CONSTRUCTION (AITC).
- AMERICAN NATIONAL STANDARDS INSTITUTE (ANSI).
- APA (AMERICAN PLYWOOD ASSOCIATION) E30: ENGINEERED WOOD CONSTRUCTION GUIDE
- ASCE - 5 (AMERICAN SOCIETY OF CIVIL ENGINEERS): BUILDING CODE REQUIREMENTS FOR MASONRY STRUCTURES.
- ASCE-6: SPECIFICATIONS FOR MASONRY STRUCTURES.
- ASCE-7: MINIMUM DESIGN LOADS FOR BUILDING AND OTHER STRUCTURES.
- AMERICAN WOOD COUNCIL (AWC).
- AMERICAN SOCIETY FOR TESTING AND MATERIALS (ASTM).
- AMERICAN WOOD PROTECTION ASSOCIATION (AWPA).
- AMERICAN WELDING SOCIETY (AWS).
- FEDERAL EMERGENCY MANAGEMENT AGENCY (FEMA).
- GYPSUM ASSOCIATION (GA).
- NATIONAL CONCRETE MASONRY ASSOCIATION (NCMA).
- SSPC: STEEL STRUCTURES PAINTING COUNCIL.
- TPI-I: NATOINAL DESIGN STANDARDS FOR METAL-PLATE-CONNECTED WOOD TRUSS CONSTRUCTION.

D

DESIGN LOADS:

DESCRIPTION	DEAD LOAD	LIVE LOAD	SNOW LOAD (b)
ROOF	17 PSF	-	30 PSF
FLOOR	15 PSF	40 PSF	-
ATTIC W/OUT STORAGE	10 PSF	10 PSF	-
ATTIC W/ LIMITED STORAGE	10 PSF	20 PSF	-
HABITABLE ATTICS & ATTICS W/ FIXED STAIR	10 PSF	30 PSF	-
SLEEPING ROOMS	10 PSF	30 PSF	-
BALCONIES & DECKS	10 PSF	40 PSF	-
STAIRS	10 PSF	40 PSF	-
GUARD RAILS & HAND RAILS	-	200 LBS (c)	-

WIND LOAD:

- WIND SPEED (ULTIMATE): 115 MPH
- WIND PRESSURE: 18 PSF (f)
- WIND EXPOSURE CATEGORY: B

FOUNDATION DESIGN LOADS:

- SOIL BEARING CAPACITY (g): 2000 PSF
- LATERAL EARTH PRESSURE: 60 PSF/FT

EARTHQUAKE LOADS:

- SEISMIC DESIGN CATEGORY: B
- SITE CLASS: B

NOTES:

a. REFER TO IRC TABLE R301.5 FOR MORE INFORMATION.
b. SNOW LOAD SPECIFIED IS GROUND SNOW LOAD ONLY.
c. A SINGLE CONCENTRATED LOAD APPLIED IN ANY DIRECTION AT ANY POINT ALONG THE TOP.
d. MECHANICAL EQUIPMENT LOADS IN EXCESS OF 200 LBS SHALL BE NOTIFIED TO STRUCTURAL ENGINEER.
e. PRE-FABRICATED STRUCTURAL COMPONENT SHALL COMPLY WITH DESIGN LOADS FROM APPLICABLE CODES/STANDARDS IN ADDITION TO LOADS SPECIFIED IN THESE NOTES.
f. WIND PRESSURE SPECIFIED IS FOR MAIN WIND FORCE RESISTING SYSTEM ONLY. WIND PRESSURE & LOADS FOR STRUCTURAL COMPONENTS AND CLADDING SHALL BE DETERMINED BY RESPECTIVE REGISTERED DESIGN PROFESSIONAL PER APPLICABLE STANDARDS/CODES.
g. SOIL BEARING CAPACITY IS ASSUMED UNLESS GEOTECHNICAL REPORT IS PROVIDED PER SITE WORK SECTION.

C

B

DEFLECTION CRITERIA:

DESCRIPTION	TOTAL LOAD	LIVE LOAD
ROOF TRUSSES/RAFTERS/CEILING JOISTS	L/240	L/360 OR 1/2" MAX.
FLOOR JOISTS/FLOOR TRUSSES	L/240	L/480 OR 1/2" MAX.
MEMBERS SUPPORTING BRICK/ HORIZONTAL MASONRY MEMBERS	L/600 OR 0.3" MAX.	
JOISTS/TRUSSES SUPPORTING CERAMIC TILE	L/720	

SITE WORK:

- GEOTECHNICAL REPORT WAS NOT PROVIDED AND FOUNDATION DESIGN IS BASED ON ASSUMED SOIL DESIGN CRITERIA AND SHALL BE FIELD VERIFIED.
- BOTTOM OF ALL EXTERIOR FOOTING SHALL BE MINIMUM FROST DEPTH OF 30 INCHES BELOW GRADE OR AS REQUIRED BY GOVERNING AUTHORITY OR CODE, AND SHALL PROJECT 12" IN TO UNDISTURBED VIRGIN SOIL OR ENGINEERED FILL.
- SOIL BEARING CAPACITY SHALL BE VERIFIED ON-SITE BY GEOTECHNICAL ENGINEER.
- ALL BEARING STRATA SHALL BE ADEQUATELY DRAINED PRIOR TO PLACING FOUNDATION CONCRETE.
- THE SIDES OF FOOTINGS MAY BE EARTH-FORMED IF THE EXCAVATION CAN BE KEPT VERTICAL CLEAN AND STABLE. OTHERWISE FORMS MUST BE USED.
- UNBRACED EXCAVATIONS SHALL BE SLOPED NO GRATER THAN 2:1.
- NO EXCAVATION SHALL BE CLOSER THAN ATLEAST A SLOPE OF 2:1 TO THE UNDERSIDE OF ANY EXISTING OR NEW FOOTING WITHOUT THE WRITTEN AND CERTIFIED PERMISSION FROM GEOTECHNICAL ENGINEER.
- STEP FOOTINGS SHALL BE PROVIDED WITH A RATIO OF 2:1.
- FOUNDATION ELEMENTS THAT ARE TO SUPPORT FILL ON BOTH SIDES SHALL BE BACKFILLED SIMULTANEOUSLY AND UNIFORMLY ON BOTH SIDES.
- FOUNDATION ELEMENTS THAT ARE TO SUPPORT FILL ON ONE SIDE ONLY SHALL BE PROPERLY BRACED BY PERMANENT STRUCTURAL ELEMENTS PRIOR TO BACKFILLING. PROVIDE TEMPORARY BRACING AS REQUIRED UNTIL PERMANENT BRACING IN PLACE AND FOUNDATION WALL ACHIEVES DESIRED STRENGTH.
- ENGINEERED FILLS HALL BE PLACED IN 8" MAXIMUM HEIGHT LOOSE LIFTS AND COMPACTED TO 95% OF MAXIMUM DRY DENSITY AT OPTIMUM MOISTURE CONTENT AS ESTABLISHED BY ASTM D-698.
- NO PORTION OF THE STRUCTURAL DRAWINGS SHALL BE USED AS SHOP DRAWINGS. CONTRACTOR IS RESPONSIBLE FOR FURNISHING SHOP DRAWINGS AND SHALL SUBMIT TO ENGINEER OF RECORD FOR REVIEW.
- PROVIDE SHORING AND PROTECTION FOR EXCAVATION BANKS AS NECESSARY TO AVOID CAVING
- PROVIDE 6 MIL POLYETHYLENE VAPOR VARIOUS UNDER SLAB ON GRADE OR AS RECOMMENDED BY GEOTECHNICAL ENGINEER.
- ALL RECOMMENDATIONS SPECIFIED IN GEOTECHNICAL REPORT SHALL BE FOLLOWED ALL THE TIME AND SHALL GOVERN.

A

FILE NAME:

GENERAL

- STRUCTURAL ENGINEERING DRAWINGS PREPARED IN THIS SET ARE BASED ON ARCHITECTURAL DRAWINGS AND PROVIDED INFORMATION AND SHALL BE READ IN CONJUNCTION WITH ARCHITECTURAL DRAWINGS.
- DETAILS, SECTIONS AND NOTES SHOWN ON THESE DRAWINGS ARE INTENDED TO BE TYPICAL AND SHALL BE APPLY TO SIMILAR CONDITIONS ELSEWHERE OTHERWISE SHOWN OR NOTED.
- THE STRUCTURAL INTEGRITY OF THE BUILDING IS DEPENDENT UPON COMPLETION OF WORK ACCORDING TO CONTRACT DRAWINGS AND SPECIFICATIONS. THE STRUCTURAL ENGINEER ASSUMES NO LIABILITY FOR THE STRUCTURE DURING CONSTRUCTION. THE METHODS OF CONSTRUCTION AND SEQUENCE OF OPERATIONS IS THE SOLE RESPONSIBILITY OF OWNER/CONTRACTOR.
- TEMPORARY BRACING AND SHORING SHALL BE RESPONSIBILITY OF CONTRACTOR AND SHALL BE DESIGNED BY SPECIALITY ENGINEER PER APPLICABLE CODES/STANDARDS TO ENSURE VERTICAL AND LATERAL STABILITY OF THE STRUCTURE OR PORTION THEREOF DURING THE CONSTRUCTION.
- THE CONTRACTOR SHALL BE RESPONSIBLE FOR PROVIDING NECESSARY UNDERPINNING OR BRACING FOR EXISTING STRUCTURE OR PORTION THEREOF. STRUCTURAL ENGINEER IS NOT RESPONSIBLE FOR ANY DESIGN OR PROVISIONS OF ANY TEMPORARY STRUCTURES.
- DO NOT CHANGE SIZE OR DIMENSIONS OF STRUCTURAL ELEMENTS WITHOUT WRITTEN PERMISSION FROM STRUCTURAL ENGINEER.
- DO NOT SCALE THE DRAWINGS, USE DIMENSIONS SHOWN. COORDINATE AND VERIFY ALL DIMENSIONS WITH ARCHITECTURAL DRAWINGS. ARCHITECTURAL DRAWINGS SUPERCEDES ALL DIMENSIONS SHOWN IN THESE DRAWINGS.
- GENERAL CONTRACTOR IS RESPONSIBLE TO PERFORM ALL NECESSARY TESTINGS PER GOVERNING ASTM STANDARDS FOR SOIL, CONCRETE OR ANY OTHER MATERIALS INVOLVED IN THE PROJECT AND SHOP DRAWINGS OF SUCH DESIGN OR REPORTS OF TESTING SHALL BE SUBMITTED TO ARCHITECT/ENGINEER FOR RECORD AND APPROVAL. ALL SUCH DESIGN OR TEST RESULTS SHALL BE SIGNED AND SEALED BY LICENSED PROFESSIONAL IN STATE OR JURISDICTION WHERE THE PROJECT IS LOCATED.

CAST-IN-PLACE CONCRETE:

- CONCRETE DESIGN AND DETAILING SHALL CONFORM TO THE REQUIREMENTS OF ACI 318 AND ACI 301, LATEST EDITIONS. CONTRACTOR SHALL SUBMIT MIX DESIGNS ACCOMPANIED BY APPROPRIATE GRAPHS AND BACKGROUND DATA FOR APPROVAL. MIX DESIGN SHALL INDICATE 7 AND 28 DAYS STRENGTHS, CEMENT CONTENT, AIR CONTENT, WATER-CEMENT RATIO, AMOUNT OF FINE AND COARSE AGGREGATES, AND ADMIXTURES.
- ALL REINFORCING STEEL SHALL BE DEFORMED BILLET STEEL CONFORMING TO ASTM A615 GRADE 60 AND DETAILED, FABRICATED AND PLACED CONFORMING TO MANUAL OF STANDARD PRACTICE FOR DETAILING CONCRETE STRUCTURES (ACI 315)
- ALL WELDED WIRE FABRIC SHALL CONFORM TO ASTM A185. ALL MESH EDGES SHALL LAP A MIN. OF 2 SQUARES.
- CONCRETE COMPRESSIVE STRENGTHS AT 28 DAYS SHALL BE 3000 psi FOR FOOTINGS, FOUNDATION WALLS AND SLAB ON GRADE IN ENCLOSED SPACES & 3500 psi FOR HORIZONTAL SURFACES EXPOSED TO WEATHER.
- SLUMP AT THE POINT OF DISCHARGE IN TO THE FORMS SHALL BE 4" +/- 1" FOR VERTICAL ELEMENTS AND 6" +/- 1" FOR HORIZONTAL ELEMENTS.
- CAST-IN-PLACE CONCRETE SHALL BE READY-MIX PER ASTM C94.
- ALL CONCRETE EXPOSED TO WEATHER SHALL HAVE A MIN. AIR ENTRAINMENT OF 6% +/- 1% PER ACI 318-08; SECTION: 4.4.1.
- PROVIDE CORNER BARS AT ALL WALL AND FOOTING INTERSECTIONS AND MATCH CONTINUING REINFORCEMENT.
- SEE ARCHITECTURAL DRAWINGS FOR NECESSARY CONCRETE FINISHES.
- RESTRICT ADDITION OF MIX WATER AT THE JOB SITE. DO NOT ADD WATER WITHOUT APPROVAL OF THE INSPECTIONS ENGINEER AND DO NOT EXCEED SLUMP LIMITATIONS.
- ALL GROUTS SHALL BE PRE-MIXED NON-SHRINKABLE, NON-METALLIC FORMULA PRO CONFORMING TO ASTMC827, AND SHALL HAVE A SPECIFIED COMPRESSIVE STRENGTH OF 3000 psi WITHIN 24 HOURS AND 6000 psi AT 28 DAYS. PRE-GROUTING OF BASE PLATES WILL NOT BE PERMITTED.
- PROVIDE KEYED JOINTS BETWEEN ALL NON-MONOLITHIC INTERSECTING CONCRETE ELEMENTS AND JOINTS.
- CONTRACTOR SHALL VERIFY EMBEDDED ITEMS, INCLUDING BUT NOT LIMITED TO ANCHOR BOLTS, BOLT CLUSTERS, WELD PLATES etc. BEFORE PLACING CONCRETE. NOTIFY ENGINEER OF ANY CONFLICTS WITH REBAR.
- CONCRETE EXPOSED TO WEATHER SHALL BE AIR ENTRAINED. TOTAL AIR CONTENT (BY PERCENT OF CONCRETE VOLUME) SHALL BE NOT LESS THAN 5% OR MORE THAN 7%.
- GENERAL CONTRACTOR IS RESPONSIBLE FOR SUBMITTING SHOP DRAWINGS SIGNED AND SEALED BY REGISTERED DESIGN PROFESSIONAL THAT INCLUDES: 1. CONCRETE MIX DESIGN 2. DETAILED REINFORCEMENT SHOP DRAWINGS PER ACI 318 AND ACI DETAILING MANUAL. 3. FORM WORK, SHORING, RE-SHORING OR UNDERPINNING SHOP DRAWINGS AS REQUIRED FOR PROJECT.

REINFORCING STEEL:

- REINFORCING BARS SHALL BE DEFORMED BILLET STEEL CONFORMING TO ASTM A615. REINFORCING BARS SHALL BE GRADE 60, UNLESS NOTED OTHERWISE.
- PLAIN BARS FOR SPIRAL REINFORCEMENT SHALL CONFORM TO ASTM A 615, GRADE 60.
- PLAIN STEEL WELDED WIRE REINFORCEMENT SHALL CONFORM TO ASTM A185.
- WELDED DEFORMED STEEL BAR MATS FOR CONCRETE REINFORCEMENT SHALL CONFORM TO ASTM A184.
- BARS SHALL BE BRANDED BY THE MANUFACTURER WITH BAR SIZE AND GRADE OF STEEL AND CERTIFIED MILL REPORTS SHALL BE SUBMITTED FOR RECORD.
- REINFORCING STEEL SHALL BE DETAILED IN ACCORDANCE WITH THE ACI "MANUAL OF STANDARD PRACTICE FOR DETAILING REINFORCED CONCRETE STRUCTURES", LATEST EDITION.
- PROVIDE MINIMUM CLEAR CONCRETE COVER (a) FOR REINFORCEMENT AS SPECIFIED BELOW UNLESS SPECIFICALLY NOTED OTHERWISE ON THE PLANS:

DESCRIPTION			MIN. COVER (IN.)
CONCRETE CAST AGAINST AND PERMENANTLY EXPOSED TO EARTH			3"
CONCRETE EXPOSED TO EARTH OR WEATHER	#6 THROUGH #18 BARS		2"
	#5 BAR, W31 OR D31 WIRE AND SMALLER		1 1/2"
CONCRETE NOT EXPOSED TO EARTH OR WEATHER	SLAB, WALLS, JOISTS		3/4"
	BEAMS, COLUMNS (PRIMARY REINF., TIES, STIRRUPS, SPIRALS.		1 1/2"
	SHELLS, FOLDED PLATES	#6 BARS AND LARGER	3/4"
		#5 BAR, W31 OR D31 WIRE, AND SMALLER	1/2"

MASONRY:

- CONCRETE BLOCKS USED IN WALLS SHALL CONFORM TO ASTM C90. BRICK SHALL CONFORM TO ASTM C62 AND ASTM C216, AS APPLICABLE. MORTAR FOR BRICK VENEER AND OTHER MASONRY SHALL CONFORM TO ASTM C270, TYPE N. TYPE S MORTAR SHALL BE USED TYPICALL FOR ALL MASONRY, AND TYPE M MORTAR SHALL BE USED FOR BELOW GRADE MASONRY AND/OR MASONRY IN CONTACT WITH SOIL, U.N.O.
- HOLLOW LOAD BEARING UNITS SHALL CONFORM TO ASTM C90, NORMAL WEIGHT TYPE II WITH A MIN. NET COMPRESSIVE UNIT STRENGTH OF 1900 psi. (NET AREA COMPRESSIVE MASONRY STRENGTH fm' = 1500 psi)
- REINFORCED MASONRY WALLS SHALL BE BUILT SUCH THAT CELLS LINE UP VERTICALLY.
- FILLED CELLS SHALL BE FILLED WITH COARSE GROUT. COARSE GROUT SHALL CONFORM TO ASTM C476. PROPERTIES SHALL INCLUDE: 2500 psi AT 28 DAYS, 3/8" MAXIMUM AGGREGATE AND 8"-11" SLUMP. FILLED CELLS MAY ALTERNATIVELY BE FILLED WITH A 3000 psi PEA GRAVEL MIX CONCRETE. TEH PEA GRAVEL MIX SHALL BE PROPORTIONED WITH A MAXIMUM AGGREGATE SIZE OF 3/8" DIAMETER TO PROVIDE A MIN. OF 1/2" CLEARANCE, ADDITIONALLY, THE PEA GRAVEL MIX SHALL PROVIDE AN 8" TO 11" SLUMP.
- A CONTINUOUS REINFORCED CMU/CONCRETE BOND BEAM SHALL BE PROVIDED ON TOP OF EACH WALL. BOND BEAMS SHALL BE MIN. 8"x8" WITH CONTINUOUS (2) #4 REBARS.
- WHERE EXPANSION OR ANY OTHER ANCHORS ARE SHOWN, MASONRY CELLS SHALL BE FULLY GROUTED AT MINIMUM OF 8" ABOVE AND BELOW EACH EXPANSION ANCHOR OR ANY OTHER ANCHORS UNLESS NOTED OTHERWISE.
- UNLESS NOTED OTHERWISE ON PLANS, PROVIDE A MIN. OF (2) FULLY GROUTED COURSES BY 32" LENGTH AT ALL STRUCTURAL STEEL BEARING.
- VERTICAL REINFORCING BARS SHALL BE HELD IN POSITION WITH BAR POSITIONERS @ 8'-0" O.C., AT TOP AND BOTTOM OF BAR WITH MIN. CLEARANCE OF 1/2" FROM MASONRY. THE CLEAR DISTANCE BETWEEN BARS SHALL NOT BE LESS THAN ONE BAR DIAMETER NOR LESS THAN 1". CENTER BARS IN WALLS UNLESS NOTED OTHERWISE.
- REINFORCING BARS SHALL BE STRAIGHT EXCEPT FOR BENDS AROUND CORNERS.
- MIN. LAP SPLICE SHALL BE 36 BAR DIAMETERS. WIRE TIE LAP SPLICES.
- WHEN A FOUNDATION DOWEL DOESN'T LINE UP WITH A VERTICAL CORE. IT SHALL NOT BE SLOPED MORE THAN 1:6. DOWELS SHALL BE GROUTED IN TO A CORE IN VERTICAL ALIGNMENT, EVEN IF IT IS IN A CELL ADJACENT TO VERTICAL WALL REINFORCEMENT.
- HORIZONTAL WALL REINFORCING SHALL BE ZINC COATED COLD DRAWN TRUSS TYPE DUR-O-WALL (OR EQUIVALENT) CONFORMING TO ASTM A82 SPACED AT 16' O.C. MAX. HORIZONTAL JOINT REINFORCING SHALL CONSIST OF (2) 9 GA OR LARGER HORIZONTAL BARS WELD CONNECTED WITH 12 GA OR LARGER CROSS-WIRES. ZINC COATING CONFORM TO ASTM A116-73. LAP SPLICE JOINT REINFORCEMENT 12-INCHES MIN.
- PROVIDE HORIZONTAL JOINT REINFORCEMENT AT MASONRY OPENINGS SUCH AS DOORS AND WINDOWS. CONTINUE JOINT REINFORCING FOR THE FIRST AND SECOND BLOCK COURSE ABOVE AND BELOW MASONRY OPENING. EXTEND JOINT REINFORCING A MIN. OF TWO FEET BEYOND OPENINGS.
- CLEANOUTS SHALL BE PROVIDED IN THE BOTTOM COURSE OF MASNORY IN EACH GROUT POUR WHEN THE POUR HEIGHT EXCEEDS 5'. CLEANOUTS SHALL BE SAW-CUT 4" x 4".
- GROUT POUR HEIGHT SHALL NOT EXCEED 24'. PLACE GROUT IN 5' MAX. LIFTS HEIGHTS.
- CONSOLIDATE GROUT POURS AT THE TIME OF PLACEMENT BY MECHANICAL MEANS AND RECONSOLIDATE AFTER INITIAL WATER LOSS AND SETTLEMENT.
- STORE BLOCKS ON PALLETS AND COVER WITH VISQUEEN.
- PLACE ALL MASONRY IN RUNNING BOND WITH 3/8" MORTAR JOINTS. PROVIDE COMPLETE COVERAGE FACE SHELL MORTAR BEDDING HORIZONTAL AND VERTICALL FULLY MORTAR WEBS IN ALL COURSES OF PIERS, COLUMNS, AND PILASTERS AND ADJACENT TO GROUT CELLS.
- MASONRY CONTROL JOINTS SHALL BE INSTALLED AT LOCATIONS INDICATED ON DRAWINGS. ADDITIONALLY INSTALL MASONRY CONTROL JOINTS SPACE AT 26'-0" O.C.

STRUCTURAL STEEL:

- STRUCTURAL STEEL SHALL CONFORM TO THE LATEST EDITION OF THE AISC "SPECIFICATION FOR THE DESIGN, FABRICATION AND ERECTION OF STRUCTURAL STEEL FOR BUILDINGS".
- ALL W SHAPE STEEL SHALL CONFORM TO ASTM 992 (Fy = 50 KSI).
- ALL HOLLOW STRUCTURAL SECTIONS (HSS) SHALL CONFORM TO ASTM A500, GRADE B.
- ALL OTHER STRUCTURAL STEEL SHALL CONFORM TO ASTM A36 (Fy = 36 KSI).
- ALL ANCHOR BOLTS SHALL CONFORM TO ASTM A307 U.N.O.
- ALL HIGH STRENGTH BOLTS SHALL CONFORM TO ASTM A325 U.N.O.
- BOLTED CONNECTIONS SHALL USE HIGH STRENGTH BOLTS.
- BOLTS IN MOMENT FRAMES SHALL USE HIGH STRENGTH SLIP CRITICAL BOLTS. SLIP CRITICAL CONNECTIONS SHALL HAVE CONTACT SURFACES MEETING CLASS A SURFACE CONDITIONS.
- WELDED CONNECTIONS SHALL CONFORM TO THE LATEST EDITION OF AMERICAN WELDING SOCIETY CODE, AWS D11.
- ALL WELDED CONNECTIONS SHALL USE E70XX, LOW HIDROGEN ELECTRODES U.N.O. ELECTRODES SHALL BE PROTECTED FROM MOISTURE.
- BOLTED CONNECTIONS SHALL CONFORM TO THE REQUIREMENTS OF "SPECIFICATIONS FOR STRUCTURAL JOINTS USING ASTM A325 OR A490 BOLTS" AS APPROVED BY RESEARCH COUNCIL ON STRUCTURAL CONNECTIONS (RCSC). USE BEARING TYPE BOLTS WITH THREAD ALLOWED ACROSS THE SHEAR PLANE.
- ALL STEEL CONNECTIONS SHALL BE WELDED AROUND WITH 1/4" FILLET WELD UNLESS OTHERWISE NOTED, EXCEPT FOR SLOTTED CONNECTIONS.
- EXPANSION BOLTS SHALL BE GALVANIZED CARBON STEEL COMPONENTS, ZINC-PLATED TO COMPLY WITH ASTM B 633 AND FF-S 325, GROUP II, TYPE 4, CLASS I.
- FULL PENETRATION WELDS SHALL BE MADE AGAINST A 1/8" x 1" BACKER PLATE TACK WELDED IN PLACE BELOW THE WELD. PENETRATION WELDS SHALL BE EQUIVALENT IN DEPTH AND LENGTH TO THE PARTS JOINED.
- SUBMIT ALL STRUCTURAL STEEL/LIGHT GAGE SHOP DRAWINGS SIGNED AND SEALED BY A REGISTERED PROFESSIONAL ENGINEER. SHOP DRAWINGS SHALL INCLUDE MEMBER SIZES, MATERIAL SPECIFICATION, CONNECTIONS AND/OR ANY OTHER ITEMS REQUIRED BY GOVERNING BUILDING CODE OR JURISDICTION.
- NO FABRICATION SHALL BE STARTED PRIOR TO SHOP DRAWINGS APPROVAL.

STRUCTURAL LUMBER:

- WOOD CONSTRUCTION, INCLUDING LUMBER, CONNECTIONS, AND DETAILS SHALL COMPLY WITH THE REQUIREMENTS OF AMERICAN INSTITUTE OF TIMBER CONSTRUCTION AND THE NATIONAL FOREST AND PAPER ASSOCIATION'S CURRENT "NATIONAL DESIGN SPECIFICATION FOR WOOD CONSTRUCTION".
- ALL STRUCTURAL WOOD MEMBERS SHALL COMPLY WITH FOLLOWING MINIMUM DESIGN VALUES:

SPECIES		Fb	Ft (a)	Fv (a)	Fc ⊥ (a)	Fc II (b)	E	Emin
HEMFIR #2		850 psi	525 psi	150 psi	405 psi	1300 psi	1300000 psi	470000 psi
SPF #2		875 psi	450 psi	135 psi	425 psi	1150 psi	1400000 psi	510000 psi
THICKNESS	WIDTH	SOUTHERN PINE #2						
2" TO 4"	2" TO 4"	1100 psi	675 psi	175 psi	565 psi	1450 psi	1400000 psi	510000 psi
	5" TO 6"	1000 psi	600 psi	175 psi	565 psi	1400 psi	1400000 psi	510000 psi
	8"	925 psi	550 psi	175 psi	565 psi	1350 psi	1400000 psi	510000 psi
	10"	800 psi	475 psi	175 psi	565 psi	1300 psi	1400000 psi	510000 psi
	12"	750 psi	450 psi	175 psi	565 psi	1250 psi	1400000 psi	510000 psi
MICROLAM LVL (ML)		2600 psi	1555 psi	285 psi	750 psi	2510 psi	1900000 psi	965710 psi
PARALLAM PSL 1.8E		2400 psi	1755 psi	190 psi	425 psi	2500 psi	1800000 psi	914880 psi
PARALLAM PSL 2.0E		2900 psi	2025 psi	290 psi	750 psi	2900 psi	2000000psi	1016535 psi
TIMBERSTRAND LSL1.3E		1900 psi	1075 psi	400 psi	680 psi	1400 psi	1300000psi	660750 psi
TIMBERSTRAND LSL1.55E		2325 psi	1070 psi	310 psi	800 psi	2050 psi	1550000psi	787815 psi

- ALL EXTERIOR WOOD MEMBERS EXPOSED TO WEATHER SHALL BE PRESSURE TREATED PER APPLICABLE CODES/STANDARDS.
- ALL FASTENERS/HARDWARE EXPOSED TO WEATHER OR IN CONTACT WITH TREATED WOOD SHALL BE HOT DIP GALVANIZED OR STAINLESS STEEL OR Z-MAX COATED OR APPROVED FOR SUCH USE BY MANUFACTURER.
- PREVENT DIRECT CONTACT OF INTERIOR WOOD WITH CONCRETE OR MASONRY. PROTECT ALL WOOD FROM MOISTURE BY APPLYING APPROVED WRAP AND AVOID DIRECT CONTACT WITH MASONRY OR CONCRETE.
- CONTRACTOR SHALL SUBMIT SHOP DRAWINGS FOR ENGINEER'S REVIEW AND APPROVAL PRIOR TO ORDERING JOISTS FOR CONSTRUCTION.
- FLOOR & ROOF FRAMING/DIRECTION SHOWN ON THE DRAWINGS ARE SCHEMATIC AND FOR REFERENCE ONLY AND SHALL NOT BE CONSIDERED AS SHOP DRAWINGS. SHOP DRAWINGS FROM MANUFACTRER SHALL BE FOLLOWED FOR JOIST/TRUSS PLACEMENTS.
- ALL MECHANICAL, PLUMBING ELECTRICAL OR ANY OTHER COMPONENTS FROM OTHER DISCIPLINES SHALL BE COORDINATED BY MANUFACTURER IN SHOP DRAWINGS AS WELL AS ON THE FIELD. NOTIFY ARCHITECT/STRUCTURAL ENGINEER IF ANY DESCRIPANCY OR CONFLICT FOUND.
- ALL STRUCTURAL FRAMING MEMBERS SUPPORTING FLOOR JOISTS/TRUSSES ARE DESIGNED BASED ON LAYOUT REPRESENTED ON DRAWINGS. ANY MODIFICATION, CHANGE OR ADDITION SHALL NOT BE DONE WITHOUT PRIOR APPROVAL BY ARCHITECT/ENGINEER. SHOP DRAWINGS SHALL BE SUBMITTED FOR REVIEW FOR ANY SUCH CHANGE.
- ROOF/FLOOR TRUSS MANUFACTURER SHALL PROVIDE NECESSARY BRACING TO WEB MEMBERS AS REQUIRED BY GOVERNING CODE/STANDARD.
- ALL ROOF SHEATHING SHALL BE APA RATED 7/16" C-C, C-D OR STRUCTURAL II WITH SPAN RATING OF 48/24 PER "AMERICAN PLYWOOD ASSOCIATION". PROVIDE MIN. NAILING PATTERN W/ 8d COMMON NAILS @ 6" O.C. ON EDGES AND 12" O.C. IN FIELD. PROVIDE PLYWOOD CLIPS AT PLYWOOD EDGES BETWEEN EACH FRAMING MEMBER.
- ALL FLOOR SHEATHING SHALL BE 3/4" THICK T&G APA RATED AND WITH SPAN RATING OF 48/24 OR STURD-I-FLOOR 24" O.C. RATED PLYWOOD SHALL BE GLUED AND NAILED. INSTALL 100% GLUE LINE AND MIN. NAILING PATTERN OF 10d COMMON NAILS @ 6" O.C. ON EDGE SUPPORTS AND 12" O.C. INTERMEDIATE SUPPORTS.
- ALL EXTERIR STUD WALL SHEATHING SHALL BE MIN. 7/16" APA RATED NAILED WITH 8d NAILS @ 6" O.C. ON EDGES AND 12" O.C. IN FIELD U.N.O. REFER TO SHEAR WALL SCHEDULE FOR MORE INFORMATION.
- ALL WOOD PLATE SPLICES SHALL BE STAGGERED AT 4'-0" MIN.
- PROVIDE MIN. (2) 2x12 UP TO 4'-0" SPAN, (2) ML10 FOR 4'-0" TO 6'-0" SPAN, (2) ML12 FOR 6'-0" TO 9'-0" SPAN WHERE HEADER/LINTEL/BEAM SIZES ARE NOT SPECIFIED ON PLANS. ANY SPANS LARGER THAN 9'-0" SUPPORITNG FRAMING MEMBERS (POSTS/BEAMS/BEARING WALLS) AND NOT SPECIFIED ON PLANS SHALL BE NOTIFIED TO ENGINEER IMMEDIATELY.
- PROVIDE MIN. DOUBLE JOISTS OR SPECIAL FLOOR TRUSS UNDER (2) 2x POSTS AND (2) PLY MICROLAM LVL OR SPECIAL FLOOR TRUSS TO MATCH FLOOR THICKNESS UNDER (3) 2x POSTS UNLESS NOTED OTHERWISE ON THE PLAN. CONTRACTOR SHALL NOTIFY ENGINEER FOR SUPPORTING STRUCTURAL MEMBER FOR ALL OTHER POST SIZES COMING FROM ABOVE.
- PROVIDE MIN. (3) 2x POSTS UNDER ALL BEAMS/GIRDER TRUSSES/HEADERS U.N.O. ON PLANS.
- PROVIDE SOLID BLOCKING WITHIN FLOOR SYSTEM FOR POSTS/JACKSTUDS COMING FROM ABOVE.
- ALL POSTS/JACKS SHALL CONTINUE DOWN TO FOUNDATION/STRUCTURAL MEMBERS SUCH AS BEAMS/GIRDERS/GIRDER TRUSSES. NOTIFY ENGINEER IF ANY DESCRIPANCY FOUND DURING CONSTRUCTION.
- PROVIDE DOUBLE JOISTS OR SPECIAL TRUSS UNDER ALL WALLS/PARTITIONS EXTEND 1/2 OR MORE OF FRAMING SPAN.
- PROVIDE BLOCKING BETWEEN TOP FLANGE/CHORD OF JOISTS/FLOOR TRUSS SUPPORTING PARTITION WALL FROM ABOVE.
- PROVIDE FULL HEIGHT BLOCKING BETWEEN FLOOR JOISTS/TRUSSES SUPPORTING BEARING WALL FROM ABOVE.
- ALL DIMENSION LUMBER SHALL BE DRESSED S4S AND SHALL BEAR GRADE STAMP OF THE MANUFACTURER'S ASSOCIATION.
- ALL LUMBER SHALL BE SEASONED AND FREE FROM WRAP.
- PROVIDE SOLID BLOCKING BETWEEN JOISTS AND RAFTERS AT ALL BEARING POINTS AND AT MIN. OF 8'-0" O.C.
- PROVIDE STRONG BACKS AT MIN. OF 10'-0" O.C. AT ALL FLOOR TRUSSES.
- PROVIDE CONTINUOUS RIM BOARD AT PERIMETER AND AT END BEARING WALLS WHEN I-JOISTS ARE USED FOR FLOOR FRAMING.
- PROVIDE MIN. 1 3/4" BEARING AT END AND 3 1/2" MIN. BEARING AT INTERMEDIATE SUPPORT WHEN I-JOISTS ARE USED FOR FLOOR FRAMING.
- PROVIDE WEB-STIFFENERS, SQUASH BLOCKS, BEARING BLOCKS, BLOCKING PANELS, FILLER BLOCKS, BACKER BLOCKS AS RECOMMENDED BY MANUFACTURER. REFER TO MANUFACTURER'S GUIDELINES FOR INSTALLATION AND FASTENING.
- PRE-ENGINEERED/PRE-FABRICATED WOOD ROOF/FLOOR TRUSSES SHALL BE IN ACCORDANCE WITH "DESIGN SPECIFICATIONS FOR METAL PLATE CONNECTED WOOD TRUSSES " BY "TRUSS PLATE IINSTUTE (TPI - I)"
- PROVIDE HURRICANE CLIPS TO RESIST UPLIFT AS SHOWN ON SHOP DRAWINGS. PROVIDE SIMPSON "H2.5" HURRICANE CLIP MIN.
- REFER & FOLLOW "BCSI" GUIDES B1 THRU B11 FOR HANDLING, INSTALLING, RESTRAINING AND BRACING OF METAL PLATE CONNECTED WOOD TRUSSES.
- INSTALLATION OF PRE-ENGINEERED/PRE-FABRICATED ROOF AND/OR FLOOR TRUSSES SHALL BE DONE PER TRUSS DESIGN DRAWINGS AND TRUSS ENGINEER SHALL BE RESPONSIBLE FOR PROVIDING ANY REPAIRS OR ALTERATIONS IN TRUSS CONFIGURATIONS.

EXISTING CONDITIONS:

- ALL EXISTING STRUCTURAL MEMBERS TO REMAIN INTACT UNLESS SPECIFICALLY NOTED TO BE REMOVED BY MOST RECENT DEMOLITION DOCUMENTS BY ARCHITECT OR OTHERWISE NOTED ON THESE DRAWINGS.
- ALL INFORMATION ON THESE DRAWINGS RELATED TO EXISTING CONDITIONS ARE PROVIDED BASED ON AVAILABLE CONTRACT DRAWINGS OR INFORMATION PER ARCHITECTURAL DRAWINGS. CONTRACTOR IS RESPONSIBLE FOR FIELD VERIFYING ALL EXISTING CONDITIONS AND NOTIFY STRUCTURAL ENGINEER IF ANY DISCREPANCY IS FOUND BETWEEN CONTRACT DRAWINGS AND EXISTING CONDITIONS.
- THE PORTION OF THE STRUCTURE THAT IS SHOWN TO BE STRUCTURALLY MODIFIED HAVE BEEN DESIGNED ACCORDING TO BEST ENGINEERING PRACTICE. HOWEVER WE DO NOT ASSUME RESPONSIBILITY FOR ANY DAMAGE THAT MAY ARISE FOR ANY PORTION OF THE BUILDING NOT REDESIGNED, ALTERED OR CONSTRUCTED UNDER THIS SET OF DESIGN DRAWINGS. WE DO NOT ASSUME ANY RESPONSIBILITY OR LIABILITY TOWARDS DEFICIENCIES IN THE CONDITION OF THE BUILDING PRIOR TO RENOVATION PER NEW CONTRACT DRAWINGS.
- CONTRACTOR SHALL FIELD VERIFY ALL DIMENSIONS PRIOR TO COMMENCEMENT OF ANY WORK.

WOOD FASTENERS/CONNECTORS:

- FASTENERS USED BELOW GRADE TO ATTACH PLYWOOD TO EXTERIOR WALLS OR CRAWL SPACE STUD WALLS OR KNEE WALL CONSTRUCTION OVER FOUNDATION SHALL BE TYPE 304 OR 316 STAINLESS STEEL.
- ALL MECHANICAL WOOD CONNECTORS SHALL BE CLEARLY SPECIFIED ON SHOP DRAWINGS SUPPLIED BY MANUFACTURER AND SHALL BE DESIGNED FOR APPROPRIATE LOAD AS REQUIRED BY GOVERNING CODE/JURISDICTION.
- ALL MECHANICAL CONNECTORS AND/OR FASTENERS INCLUDING NAILS/BOLTS/SCREWS EXPOSED TO CONCRETE/MASONRY/WEATHER SHALL BE HOT DIP GALVANIZED OR STAINLESS STEEL OR APPROVED BY MANUFACTURER FOR SUCH USE.
- BOLT HOLES SHALL BE A MIN. OF 1/32" TO A MAX. OF 1/16" LARGER THAN THE BOLT DIAMETER.
- A METAL PLATE OR WASHER NOT LESS THAN A STANDARD OVERSIZED CUT WASHER SHALL BE BETWEEN THE WOOD AND THE BOLT HEAD AND BETWEEN THE WOOD AND THE NUT.
- SNUG TIGHT ALL BOLTS. TIGHTEN CONNECTIONS WHICH HAVE LOOSENED DUE TO WOOD SHRINKAGE.
- INSTALL BOLTS TO EXCLUDE THREADED PORTIONS OF BOLTS FROM SHEAR PLANES.
- LAG SCREWS SHALL BE INSTALLED IN PRE-DILLED HOLES.
- THE CLEARANCE HOLE FOR THE SHANK SHALL HAVE THE SAME DIAMETER AS THE SHANK AND THE SAME DEPTH OF PENETRATION AS THE LENGTH OF THE SHANK.
- THE LEAD HOLE FOR THE THREADED PORTION SHALL HAVE A DIAMETER EQUAL TO 75% FOR SOUTHERN PINE, 70% FOR OTHER SPECIES OF THE SHANK DIAMETER AND A MIN. LENGTH EQUAL TO LENGTH OF THREADED PORTION.
- WOOD SILL PLATE SHALL BE ANCHORED TO CONCRETE/MASONRY W/ 1/2" DIA. ANCHOR BOLTS WITH MIN. 7" EMBEDMENT AND 6'-0" O.C. AND 12" MAX. FROM PLATE ENDS OR SPLICES. REFER TO MANUFACTURER'S RECOMMENDATIONS FOR ALTERNATE ANCHORS. REFER TO SHEAR WALL SCHEDULE FOR ADDITIONAL ANCHORAGE REQUIREMENTS. PROVIDE MIN. 3"x3" WASHERS TO ANCHOR BOLTS WITH ENGINEERED SHEAR WALLS (SW) ARE SPECIFIED ON DRAWINGS.
- REFER TO FASTENING SCHEDULE FOR MORE INFORMATION.

NOTES ON FASTENER SCHEDULE (IRC 2018 - TABLE R602.3(1)):

a. ALL NAILS ARE SMOOTH-COMMON, BOX OR DEFORMED SHANKS EXCEPT WHERE OTHERWISE STATED. NAILS USED FOR FRAMING AND SHEATHING CONNECTIONS SHALL HAVE MIN. AVERAGE BENDING YIELD STRENGTHS AS SHOWN 80 ksi FOR SHANK DIAMETER OF 0.192 INCHES, 90 ksi FOR SHANK DIAMETERS LARGER THAN 0.142 INCHES BUT NOT LARGER THAN 0.177 INCHES AND 100 ksi FOR SHANK DIAMETERS OF 0.142 INCHES OR LESS
b. STAPLES ARE 16 GAGE WIRE AND HAVE A MINIMUM 7/16 INCH ON DIAMETER CROWN WIDTH
c. NAILS SHALL BE SPACED AT NOT MORE THAN 6" O.C. AT ALL SUPPORTS WHERE SPANS ARE 48" OR GREATER
d. 4'-0" x 8'-0" OR 4'-0" x 9'-0" PANELS SHALL BE APPLIED VERTICALLY.
e. SPACING OF FASTENERS NOT INCLUDED IN THIS TABLE SHALL BE BASED ON TABLE R602.3(2) OF IRC 2018.
f. FOR REGIONS HAVING BASIC WIND SPEED OF 110 MPH OR GREATER 8d DEFORMED (2 1/2" x 0.120) NAILS SHALL BE USED FOR ATTACHING PLYWOOD AND WOOD STRUCTURAL PANEL ROOF SHEATHING TO FRAMING WITHIN MIN. 48" DISTANCE FROM GABLE END WALLS, IF MEAN ROOF HEIGHT IS MORE THAN 25'-0" UP TO 35'-0" MAXIMUM.
g. FOR REGIONS HAVING BASIC WIND SPEED OF 100 MPH OR LESS, NAILS FOR ATTACHING WOOD STRUCTURAL PANEL ROOF SHEATHING TO GABLE END WALL FRAMING SHALL BE SPACED 6" O.C. WHEN BASIC WIND SPEED IS GREATER THAN 100 MPH, NAILS FOR ATTACHING PANEL ROOF SHEATHING TO INTERMEDIATE SUPPORTS SHALL BE SPACED 6" O.C. FOR MIN. 48" DISTANCE FROM RIDGES, EAVES AND GABLE END WALLS; AND 4" O.C. TO GABLE END WALL FRAMING.
h. GYPSUM SHEATHING SHALL CONFORM TO ASTM C 1396 AND SHALL BE INSTALLED IN ACCORDANCE WITH GA 253. FIBERBOARD SHEATHING SHALL CONFORM TO ASTM C 208.
i. SPACING OF FASTENERS ON FLOOR SHEATHING PANEL EDGES APPLIES TO PANEL EDGES SUPPORTED BY FRAMING MEMBERS AND REQUIRED BLOCKING AND AT ALL FLOOR PERIMETERS ONLY. SPACING OF FASTENERS ON ROOF SHEATHING PANEL EDGES APPLIES TO PANEL EDGES SUPPORTED BY FRAMING MEMBERS AND REQUIRED BLOCKING. BLOCKING OF ROOF OR FLOOR SHEATHING PANEL EDGES PERPENDICULAR TO THE FRAMING MEMBERS NEED NOT BE PROVIDED EXCEPT AS REQUIRED BY OTHER PROVISIONS OF THE CODE. FLOOR PERIMETER SHALL BE SUPPORTED BY FRAMING MEMBERS OR SOLID BLOCKING.

ABBREVIATIONS:

ARCH= ARCHITECTURAL
B.E.W= BOTTOM EACH WAY
BM= BEAM
BRG= BEARING
COL= COLUMN
CONC.= CONCRETE
CONT= CONTINUOUS
DBL= DOUBLE
EA= EACH
E.E.= EACH END
EXP= EXPANSION
EXT.= EXTERIOR
FDN= FOUNDATION
FTG= FOOTING
G.T.= GIRDER TRUSS
HDR= HEADER
INT.= INTERIOR
INFO INFORMATION
J= JACK STUD
MANUF= MANUFACTURER
MIN= MINIMUM
MAX= MAXIMUM
ML= MICROLAM
N.T.S= NOT TO SCALE
O.C.= ON CENTER
PLYWD= PLYWOOD
P.T.= PRESSURE TREATED
P.A. = POST FROM ABOVE
REQD= REQUIRED
S= KING STUD
SPF= SPRUCE PINE FIR
SP= SOUTHERN PINE
STL= STEEL
TYP= TYPICAL
W/= WITH
WD= WOOD
WWF= WELDED WIRE FABRIC
U.N.O.= UNLESS NOTED OTHERWISE

NO.	DESCRIPTION OF BUILDING ELEMENT	FASTNERS
1	BLOCKING BETWEEN JOISTS OR RAFTERS TO TOP PLATE (TOE NAIL)	(3) 8d (2 1/2" x 0.113")
2	CEILING JOISTS TO PLATE (TOE NAIL)	(3) 8d (2 1/2" x 0.113")
3	CEILING JOISTS NOT ATTACHED TO PARALLEL RAFTER, LAPS OVER PARTIAIONS (FACE NAIL)	(3) 10d
4	COLLAR TIE RAFTER (FACE NAIL) OR 1 1/4" x 20 GAGE RIDGE STRAP	(3) 10d (3" x 0.128")
5	RAFTER TO PLATE (TOE NAIL)	(2) 16d (3 1/2" x 0.135")
6	ROOF RAFTERS TO RIDGE, VALLEY OR HIP RAFTERS TOE NAILS FACE NAILS	(4) 16d (3 1/2" x 0.135") (3) 16d (3 1/2" x 0.135")
7	BUILT-UP CORNER STUDS	10d (3" x 0.128") @ 24" O.C.
8	BUILT-UP HEADER, TWO PIECES W/ 1/2" SPACER	16d (3 1/2" x 0.135") @ 16" O.C. ALONG EACH EDGE
9	CONTINUED HEADER, TWO PIECES	16d (3 1/2" x 0.135") @ 16" O.C. ALONG EACH EDGE
10	CONTINUOUS HEADER TO STUD (TOE NAIL)	(4) 8d (2 1/2" x 0.113")
11	DOUBLE STUDS (FACE NAILS)	10d (3" x 0.128") @ 24" O.C.
12	DOUBLE TOP PLATES (FACE NAILS)	10d (3" x 0.128") @ 24" O.C.
13	DOUBLE TOP PLATES, MIN. 48" OFFSET OF END JOINSTS (FACE NAILS IN LAPPED AREA)	(8) 16d (3 1/2" x 0.135")
14	SOLE PLATE TO JOIST OR BLOCKING (FACE NAIL)	16d (3 1/2" x 0.135") @ 16" O.C.
15	SOLE PLATE TO JOIST OR BLOCKING (FACE NAIL) AT BRACED WALL PANELS	(3) 16d (3 1/2" x 0.135") @ 16" O.C.
NO.	DESCRIPTION OF BUILDING ELEMENT	FASTNERS
16	STUD TO SOLE PLATE (TOE NAIL)	(3) 8d (2 1/2" x 0.113") OR (2) 16d (3 1/2" x 0.135")
17	TOP OR SOLE PLATE TO STUD (END NAIL)	(2) 16d (3 1/2" x 0.135")
18	TOP PLATES, LAPS AT CORNERS AND INTERSECTIONS (FACE NAIL)	(2) 10d (3" x 0.128")
19	1" BRACE TO EACH STUD AND PLATE (FACE NAIL)	(2) 8d (2 1/2" x 0.113") OR (2) STAPLES 1 3/4"
20	1" x 6" SHEATHING TO EACH BEARING (FACE NAIL)	(2) 8d (2 1/2" x 0.113") OR (2) STAPLES 1 3/4"
21	1" x 8" SHEATHING TO EACH BEARING (FACE NAIL)	(2) 8d (2 1/2" x 0.113") OR (3) STAPLES 1 3/4"
22	WIDER THAN 1" x 8" SHEATHING TO EACH BEARING (FACE NAIL)	(3) 8d (2 1/2" x 0.113") OR (4) STAPLES 1 3/4"
23	JOIST TO SILL OR GIRDER (TOE NAIL)	(3) 8d (2 1/2" x 0.113")
24	1" x 6" SUBFLOOR OR LESS TO EACH JOIST (FACE NAIL)	(2) 8d (2 1/2" x 0.113") OR (2) STAPLES 1 3/4"
25	2" SUBFLOOR TO JOIST OR GIRDER (BLIND AND FACE NAIL)	(2) 16d (3 1/2" x 0.135")
26	RIM JOIST TO TOP PLATE (TOE NAIL) ROOF APPLICATOIN ALSO	8d (2 1/2" x 0.113") @ 6" O.C.
27	2" PLANKS (PLANK & BEAM - FLOOR & ROOF)	(2) 16d (3 1/2" x 0.135") @ E.E.
28	BUILT-UP GIRDERS & BEAMS, 2" LUMBER LAYERS	10d (3" x 0.128") NAIL EA. LAYER 32" O.C. AT TOP AND BOTT. STAGGERED. TWO NAILS AT ENDS AND AT EA. SPLICE.
29	LEDGER STRIP SUPPORTING JOISTS OR RAFTERS	(3) 16d (3 1/2" x 0.135") AT EACH JOIST OR RAFTER

NO.	BUILDING MATERIALS	DESCRIPTION OF FASTENERS	NAILING PATTERN	
			EDGES	INTERMEDIATE SUPPORTS
WOOD STRUCTURAL PANELS, SUBFLOOR, ROOF AND INTERIOR WALL SHEATHING TO FRAMING & PARTICLE BOARD WALL SHEATHING TO FRAMING				
30	3/8" - 1/2"	6d (2" x 0.113") COMMON NAIL (SUBFLOOR, WALL) (j) 8d (2 1/2" x 0.131") COMMON NAIL (ROOF)	6"	12" (g)
31	5/16" - 1/2"	6d (2" x 0.113") COMMON NAIL (SUBFLOOR, WALL) 8d (2 1/2" x 0.131") COMMON NAIL (ROOF) (f)	6"	12" (g)
32	19/32" - 1"	8d (2 1/2" x 0.131") COMMON NAIL	6"	12" (g)
33	1 1/8" - 1 1/4"	10d (3" x 0.148") COMMON NAIL OR 8d (2 1/2" x 0.131") DEFORMED NAIL	6"	12"
OTHER WALL SHEATHING (h)				
34	1/2" STRUCTURAL CELLULOSIC FIBERBOARD SHEATHING	1/2" GALVANIZED ROOFING NAIL, 7/16' CROWN OR 16 GA. STAPLE, 1" CROWN & 1 1/4" LONG	3"	6"
35	25/32" STRUCTURAL CELLULOSIC FIBERBOARD SHEATHING	1 3/4" GALVANIZED ROOFING NAIL, 7/16' CROWN OR 16 GA. STAPLE, 1" CROWN & 1 1/2" LONG	3"	6"
36	1/2" GYPSUM SHEATHING (d)	1 1/2" GALVANIZED ROOFING NAIL OR 1 1/2" LONG GALVANIZED STAPLES, OR 1 1/4" SCREWS TYPE W OR S.	7"	7"
37	1/2" GYPSUM SHEATHING (d)	1 3/4" GALVANIZED ROOFING NAIL OR 1 5/8" LONG GALVANIZED STAPLES, OR 1 5/8" SCREWS TYPE W OR S.	7"	7"
WOOD STRUCTURAL PANELS, COMBINATION OF SUBFLOOR UNDERLAYMENT TO FRAMING				
38	3/4" AND LESS	6d (2" x 0.120") DEFORMED NAIL OR 8d (2 1/2" x 0.131") COMMON NAIL	6"	12"
39	7/8" - 1"	8d (2 1/2" x 0.131") COMMON NAIL OR 8d (2 1/2" x 0.120") DEFORMED NAIL	6"	12"
40	1 1/8" - 1 1/4"	10d (3" x 0.148") COMMON NAIL OR 8d (2 1/2" x 0.120") DEFORMED NAIL	6"	12"

© COPYRIGHT 2016
Structural Engineering content of this drawings are property of structBIM LLC and are issued for this project only. Any re-use or re-production of these drawings shall not be done without written consent of structBIM LLC. These drawings are to be read in conjuction with project specifications and drawings from other consultants. These drawings shall not be used as shop drawings. Do not scale drawings, use dimensions as specified.

GTM ARCHITECTS

7735 OLD GEORGETOWN ROAD
SUITE 700
BETHESDA, MD 20814
(240)333-2000
(240)333-2001 FAX
WWW.GTMARCHITECTS.COM

GTM

Seal

Consultant

structBIM ENGINEERS
WE DESIGN....WE BIM
46400 BENEDICT DR, SUITE #211
PHONE: 703-657-4481
E-MAIL: info@structBIM.com

Project

19 HIGH STREET, LOT 1
BROOKVILLE, MD 20833

I certify that these documents were prepared or approved by me, and that I am a duly licensed Professional Engineer under the laws of the State of Maryland, license number 40082, Expiration Date: 02-13-2023.

N

Issue Description	Date

structBIM Project No. 21-0243
Checked By KK
Drawn By KK
Scale 1/4" = 1'-0"

Sheet Title
GENERAL NOTES

Sheet No.
SG

COPYRIGHT, 2016 structBIMEngineers, LLC.
PLOTTED ON: 4/15/2022 12:45:47 PM

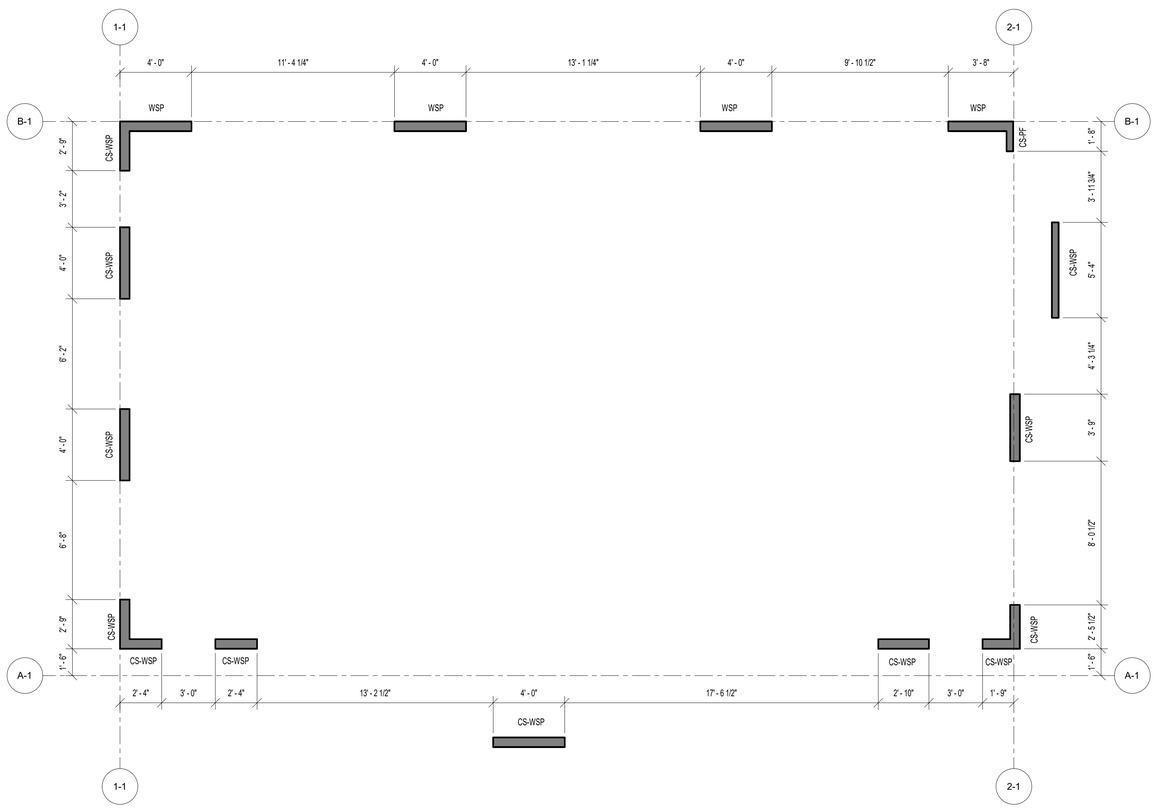

1 SWB1 FIRST FLOOR WALL BRACING PLAN

SCALE: 1/4" = 1'-0"

Ultimate Wind Speed (mph)		115							
BWL Designation		A-1		B-1		1-1		2-1	
No. of Floors above BWL		1		1		1		1	
BWP Method		CS-WSP		WSP		CS-WSP		CS-WSP	
Average BWL Spacing (ft)		31		31		50.33		50.33	
Tabular Requirement (ft)		9.25		10.80		14.10		14.10	
Adjustments	Exposure	B	1.00	B	1.00	B	1.00	B	1.00
	Eave-to-Ridge Ht. (ft)	15.00	1.15	15.00	1.15	15.00	1.15	15.00	1.15
	Max. Wall Ht. (ft)	9.00	0.95	9.00	0.95	9.00	0.95	9.00	0.95
	No. of BWLs	2	1.00	2	1.00	2	1.00	2	1.00
	Omit Interior Finish?	No	1.00	No	1.00	No	1.00	No	1.00
	Added Hold-downs?	No	1.00	No	1.00	No	1.00	No	1.00
	Joints Blocked?	Yes	1.00	Yes	1.00	Yes	1.00	Yes	1.00
	Fasteners @ 4" o.c.?	No	1.00	No	1.00	Yes	0.83	Yes	0.83
Required BWP Length (ft)		10.11		11.80		12.78		12.78	
Actual BWP's	BWP	Method	Length	Method	Length	Method	Length	Method	Length
	1	CS-WSP	2.33	WSP	4.00	CS-WSP	2.75	CS-WSP	2.42
	2	CS-WSP	2.33	WSP	4.00	CS-WSP	4.00	CS-WSP	3.75
	3	CS-WSP	4.00	WSP	4.00	CS-WSP	4.00	CS-WSP	5.33
	4	CS-WSP	2.83	WSP	4.00	CS-WSP	2.75	CS-PF	2.50
	5	CS-WSP	2.08						
	6								
	7								
Actual BWP Length (ft)		13.57		16.00		13.50		14.00	
Actual ≥ Required?		PASS		PASS		PASS		PASS	
BWPs ≤ 20' Apart?		Yes		Yes		Yes		Yes	
≥ 2 Panels in BWL?		Yes		Yes		Yes		Yes	
BWP 10' from Ends?		Yes		Yes		Yes		Yes	
Continuous Sheathing End Conditions		End 1	End 2	End 1	End 2	End 1	End 2	End 1	End 2
		1	1	NA	NA	1	1	1	1
BWL Compliance		PASS		PASS		PASS		PASS	

Contributing Length (ft)
WSP=actual
SFB=actual
GB(ss)=0.5xactual
GB(ds)=actual
CS-PF=1.5xactual
PFG=1.5xactual
PF/H=4'
AB/H=4'

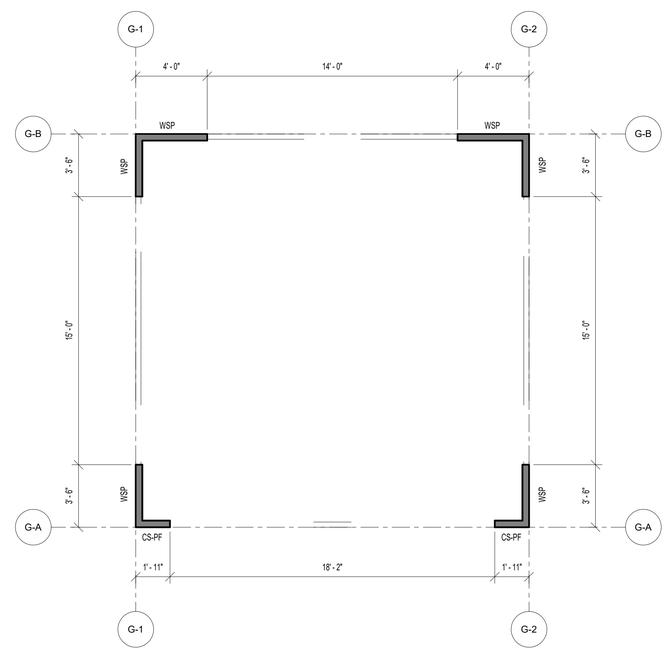

2 SWB1 FIRST FLOOR WALL BRACING PLAN @ GARAGE

SCALE: 1/4" = 1'-0"

PLAN LEGENDS & SYMBOLS:

- INDICATES BEARING WALL
- INDICATES DRAIN HOLE FROM ABOVE
- INDICATES JOIST/TRUSS HANEGR (REFER TO SHOP DWGS)
- INDICATES FRAMING DIRECTION
- INDICATES REBAR DIRECTION
- (_J+_S) — INDICATES NO. OF KING STUDS AT EACH END; INDICATES NO. OF JACK STUDS AT EACH END
- WF?? — INDICATES WALL FOOTING; WIDTH OF WALL FOOTING IN INCHES
- TS?? — INDICATES THICKENED SLAB; WIDTH OF THICKENED SLAB IN INCHES
- Fx.x — INDICATES ISOLATED COLUMN FOOTING; INDICATES SIZE OF FOOTING IN DECIMAL FEET
- ML?? — MICROLAM LVL 2.0E; DEPTH OF MICROLAM LVL IN INCHES
- LSL?? — LAMINATED STRAND LUMBER 1.7E; DEPTH OF TIMBERSTAND LSL BEAM IN INCHES
- PSL?? — PARALLAM STRAND LUMBER 2.0E; WIDTHxDEPTH OF MEMBER
- CC — COLUMN CAP
- CB — COLUMN BASE
- HD — HOLD DOWN ANCHOR
- MS — METAL STRAP
- H — JOIST/TRUSS/BEAM HANGER
- HC — HURRICANE CLIPS

WALL BRACING/SHEAR WALL SCHEDULE

MARK	DESCRIPTION	FASTENING PATTERN
CS-PF	7/16" APA RATED OSB SHEATHING	8d COMMON NAILS (2 1/2" x 0.131") @ 6" O.C. ON EDGES & 12" O.C. IN-FIELD
CS-WSP	7/16" APA RATED OSB SHEATHING	8d COMMON NAILS (2 1/2" x 0.131") @ 6" O.C. ON EDGES & 12" O.C. IN-FIELD
GB (BOTH SIDES)	1/2" GYPSUM WALL BOARD SHEATHING	1 1/2 " GALVANIZED ROOFING NAILS OR 1 1/2" GALVANIZED STAPLES OR 1 1/4" SCREWS TYPE W OR S @ 7" O.C. ON EDGES & IN-FIELD
GB (ONE SIDE)	1/2" GYPSUM WALL BOARD SHEATHING	1 1/2 " GALVANIZED ROOFING NAILS OR 1 1/2" GALVANIZED STAPLES OR 1 1/4" SCREWS TYPE W OR S @ 7" O.C. ON EDGES & IN-FIELD
WSP	7/16" APA RATED OSB SHEATHING	8d COMMON NAILS (2 1/2" x 0.131") @ 6" O.C. ON EDGES & 12" O.C. IN-FIELD

© COPYRIGHT 2016
Structural Engineering content of this drawings are property of structBIM LLC and are issued for this project only. Any re-use or re-production of these drawings shall not be done without written consent of structBIM LLC. These drawings are to be read in conjuction with project specifications and drawings from other consultants. These drawings shall not be used as shop drawings. Do not scale drawings, use dimensions as specified.

GTM ARCHITECTS

7735 OLD GEORGETOWN ROAD
SUITE 700
BETHESDA, MD 20814
(240)333-2000
(240)333-2001 FAX
WWW.GTMARCHITECTS.COM

Seal

STATE OF MARYLAND — KAMAL KHALSIAL — 40082 — PROFESSIONAL ENGINEER

Consultant

structBIM ENGINEERS
WE DESIGN....WE BIM
46400 BENEDICT DR, SUITE #211
PHONE: 703-657-4481
E-MAIL: info@structBIM.com

Project

19 HIGH STREET, LOT 1
BROOKVILLE, MD 20833

I certify that these documents were prepared or approved by me, and that I am a duly licensed Professional Engineer under the laws of the State of Maryland, license number 40082. Expiration Date: 02-13-2023.

Issue Description	Date

structBIM Project No.	21-0243
Checked By	KK
Drawn By	KK
Scale	1/4" = 1'-0"

Sheet Title

FIRST FLOOR WALL BRACING PLAN

Sheet No.

SWB1

COPYRIGHT, 2016 structBIMEngineers, LLC.

PLOTTED ON: 4/15/2022 12:45:48 PM

FILE NAME:

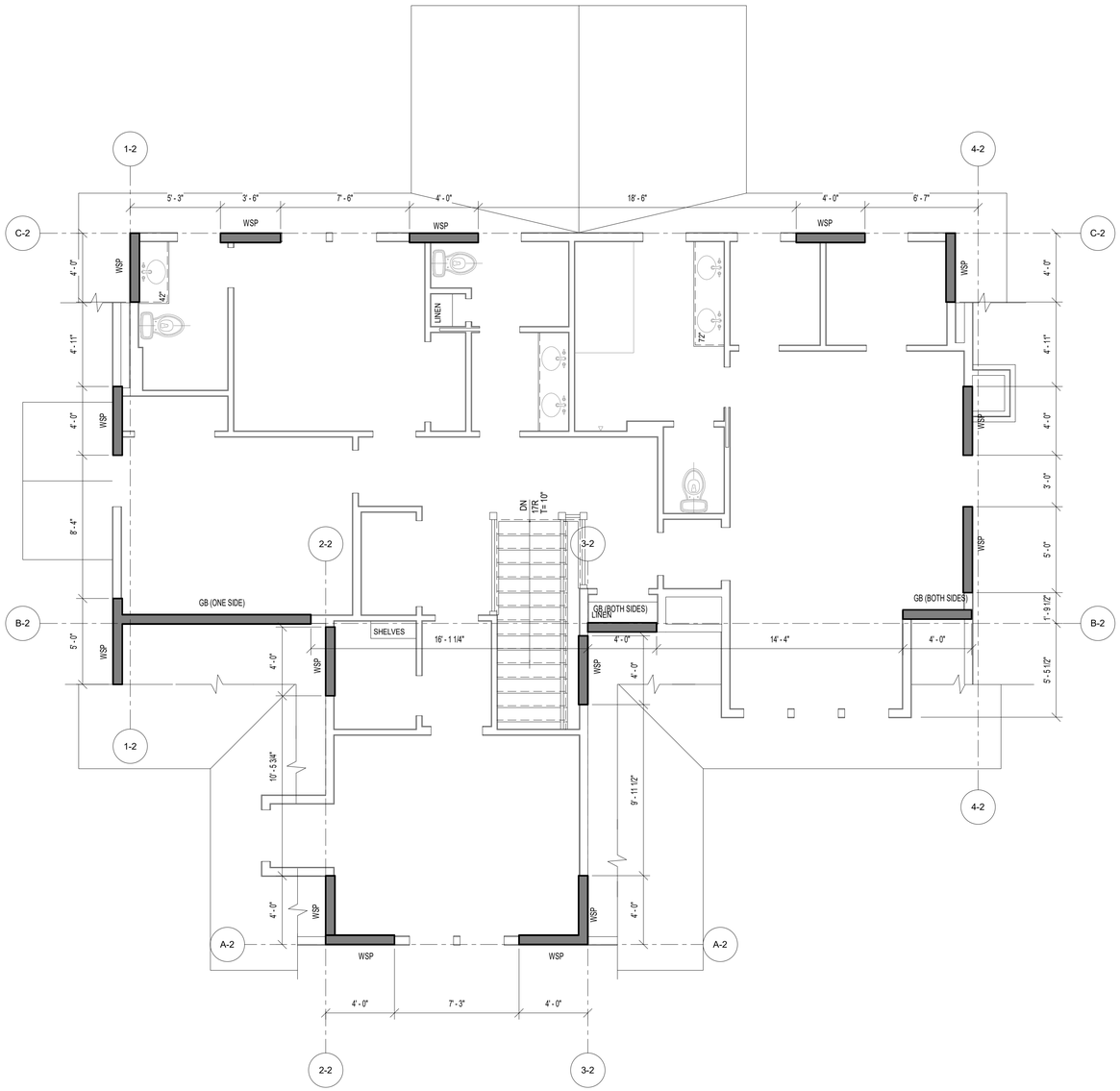

1 SWB2 SECOND FLOOR WALL BRACING PLAN
SCALE: 1/4" = 1'-0"

PLAN LEGENDS & SYMBOLS:

- INDICATES BEARING WALL
- INDICATES DRAIN HOLE FROM ABOVE
- INDICATES JOIST/TRUSS HANEGR (REFER TO SHOP DWGS)
- INDICATES FRAMING DIRECTION
- INDICATES REBAR DIRECTION
- (_J+_S) — INDICATES NO. OF KING STUDS AT EACH END; INDICATES NO. OF JACK STUDS AT EACH END
- WF?? — INDICATES WALL FOOTING; WIDTH OF WALL FOOTING IN INCHES
- TS?? — INDICATES THICKENED SLAB; WIDTH OF THICKENED SLAB IN INCHES
- Fx.x — INDICATES ISOLATED COLUMN FOOTING; INDICATES SIZE OF FOOTING IN DECIMAL FEET
- ML?? — MICROLAM LVL 2.0E; DEPTH OF MICROLAM LVL IN INCHES
- LSL?? — LAMINATED STRAND LUMBER 1.7E; DEPTH OF TIMBERSTAND LSL BEAM IN INCHES
- PSL?? — PARALLAM STRAND LUMBER 2.0E; WIDTHxDEPTH OF MEMBER
- CC — COLUMN CAP
- CB — COLUMN BASE
- HD — HOLD DOWN ANCHOR
- MS — METAL STRAP
- H — JOIST/TRUSS/BEAM HANGER
- HC — HURRICANE CLIPS

WALL BRACING/SHEAR WALL SCHEDULE

MARK	DESCRIPTION	FASTENING PATTERN
CS-PF	7/16" APA RATED OSB SHEATHING	8d COMMON NAILS (2 1/2" x 0.131") @ 6" O.C. ON EDGES & 12" O.C. IN-FIELD
CS-WSP	7/16" APA RATED OSB SHEATHING	8d COMMON NAILS (2 1/2" x 0.131") @ 6" O.C. ON EDGES & 12" O.C. IN-FIELD
GB (BOTH SIDES)	1/2" GYPSUM WALL BOARD SHEATHING	1 1/2 " GALVANIZED ROOFING NAILS OR 1 1/2" GALVANIZED STAPLES OR 1 1/4" SCREWS TYPE W OR S @ 7" O.C. ON EDGES & IN-FIELD
GB (ONE SIDE)	1/2" GYPSUM WALL BOARD SHEATHING	1 1/2 " GALVANIZED ROOFING NAILS OR 1 1/2" GALVANIZED STAPLES OR 1 1/4" SCREWS TYPE W OR S @ 7" O.C. ON EDGES & IN-FIELD
WSP	7/16" APA RATED OSB SHEATHING	8d COMMON NAILS (2 1/2" x 0.131") @ 6" O.C. ON EDGES & 12" O.C. IN-FIELD

© COPYRIGHT 2016
Structural Engineering content of this drawings are property of structBIM LLC and are issued for this project only. Any re-use or re-production of these drawings shall not be done without written consent of structBIM LLC. These drawings are to be read in conjuction with project specifications and drawings from other consultants. These drawings shall not be used as shop drawings. Do not scale drawings, use dimensions as specified.

GTM ARCHITECTS

7735 OLD GEORGETOWN ROAD
SUITE 700
BETHESDA, MD 20814
(240)333-2000
(240)333-2001 FAX
WWW.GTMARCHITECTS.COM

Seal

STATE OF MARYLAND
KUSHAL KANGAL
40082
PROFESSIONAL ENGINEER

Consultant

structBIM ENGINEERS
WE DESIGN....WE BIM
46400 BENEDICT DR, SUITE #211
PHONE: 703-657-4481
E-MAIL: info@structBIM.com

Project

19 HIGH STREET, LOT 1
BROOKVILLE, MD 20833

I certify that these documents were prepared or approved by me, and that I am a duly licensed Professional Engineer under the laws of the State of Maryland, license number 40082, Expiration Date: 02-13-2023.

N

Issue Description	Date

structBIM Project No.	21-0243
Checked By	KK
Drawn By	KK
Scale	1/4" = 1'-0"

Sheet Title
SECOND FLOOR WALL BRACING PLAN

Sheet No.
SWB2

COPYRIGHT, 2016 structBIMEngineers, LLC.
PLOTTED ON: 4/19/2022 12:45:50 PM

FILE NAME:

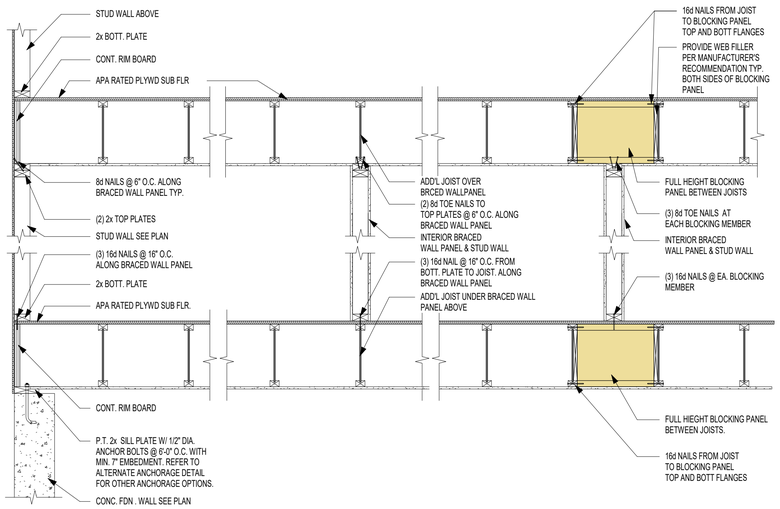

3 / SWB3 BRACED WALL PANEL PARALLEL TO I-JOISTS
SCALE: 3/4" = 1'-0"

WALL BRACING/SHEAR WALL SCHEDULE		
MARK	DESCRIPTION	FASTENING PATTERN
CS-PF	7/16" APA RATED OSB SHEATHING	8d COMMON NAILS (2 1/2" x 0.131") @ 6" O.C. ON EDGES & 12" O.C. IN-FIELD
CS-WSP	7/16" APA RATED OSB SHEATHING	8d COMMON NAILS (2 1/2" x 0.131") @ 6" O.C. ON EDGES & 12" O.C. IN-FIELD
GB (BOTH SIDES)	1/2" GYPSUM WALL BOARD SHEATHING	1 1/2 " GALVANIZED ROOFING NAILS OR 1 1/2" GALVANIZED STAPLES OR 1 1/4" SCREWS TYPE W OR S @ 7" O.C. ON EDGES & IN-FIELD
GB (ONE SIDE)	1/2" GYPSUM WALL BOARD SHEATHING	1 1/2 " GALVANIZED ROOFING NAILS OR 1 1/2" GALVANIZED STAPLES OR 1 1/4" SCREWS TYPE W OR S @ 7" O.C. ON EDGES & IN-FIELD
WSP	7/16" APA RATED OSB SHEATHING	8d COMMON NAILS (2 1/2" x 0.131") @ 6" O.C. ON EDGES & 12" O.C. IN-FIELD

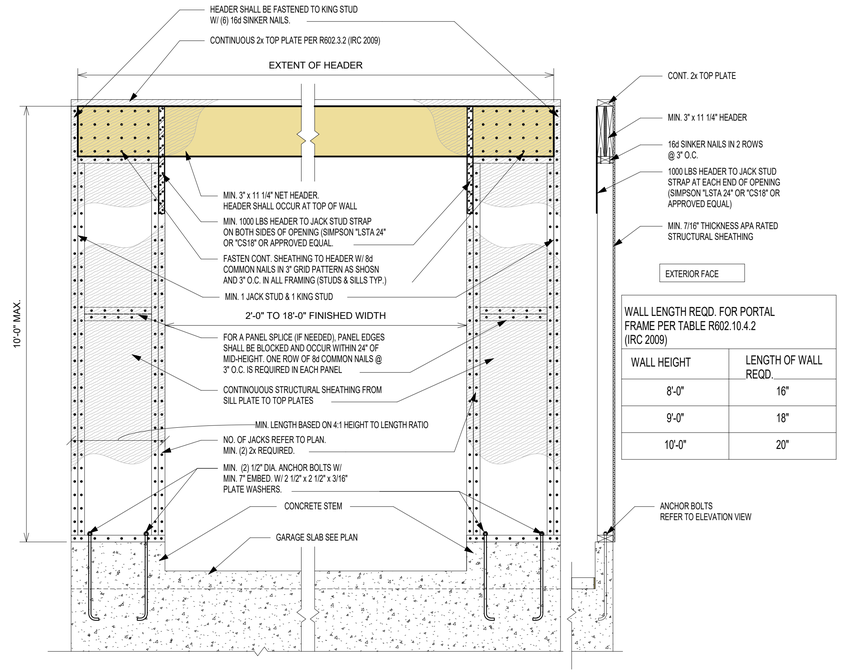

WALL LENGTH REQD. FOR PORTAL FRAME PER TABLE R602.10.4.2 (IRC 2009)	
WALL HEIGHT	LENGTH OF WALL REQD.
8'-0"	16"
9'-0"	18"
10'-0"	20"

ELEVATION VIEW

SECTION VIEW

1 / SWB3 PORTAL FRAME @ GARAGE (PFG) LEFT SIDE ONLY
SCALE: 3/4" = 1'-0"

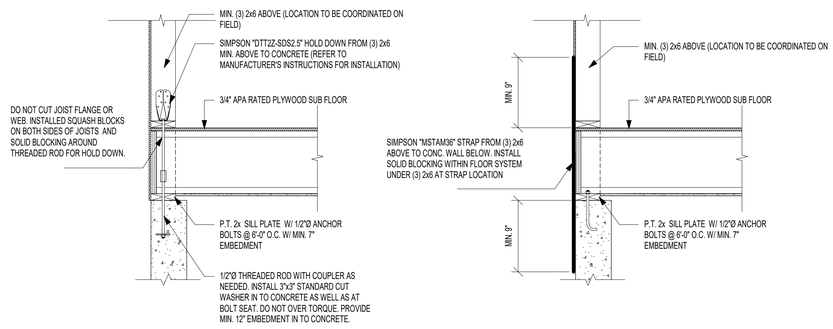

HOLD DOWN OPTION WITH SIMPSON "DTT2Z"

HOLD DOWN OPTION WITH SIMPSON "MSTAM36"

2 / SWB3 TYP. HOLD DOWN DETAILS (APPLY AT CORNERS < 24")
SCALE: 3/4" = 1'-0"

© COPYRIGHT 2016
Structural Engineering content of this drawings are property of structBIM LLC and are issued for this project only. Any re-use or re-production of these drawings shall not be done without written consent of structBIM LLC. These drawings are to be read in conjuction with project specifications and drawings from other consultants. These drawings shall not be used as shop drawings. Do not scale drawings, use dimensions as specified.

GTM ARCHITECTS
7735 OLD GEORGETOWN ROAD
SUITE 700
BETHESDA, MD 20814
(240)333-2000
(240)333-2001 FAX
WWW.GTMARCHITECTS.COM
GTM

Seal

STATE OF MARYLAND · KAMAL KHANNA · 40082 · PROFESSIONAL ENGINEER

Consultant

structBIM ENGINEERS
WE DESIGN....WE BIM
46400 BENEDICT DR, SUITE #211
PHONE: 703-657-4481
E-MAIL: info@structBIM.com

Project

19 HIGH STREET, LOT 1
BROOKVILLE, MD 20833

I certify that these documents were prepared or approved by me, and that I am a duly licensed Professional Engineer under the laws of the State of Maryland, license number 40082. Expiration Date: 02-13-2023.

N

Issue Description	*Date*

structBIM Project No.	21-0243
Checked By	KK
Drawn By	KK
Scale	3/4" = 1'-0"

Sheet Title
WALL BRACING DETAILS & SCHEDULE

Sheet No.
SWB3

COPYRIGHT, 2016 structBIMEngineers, LLC.
PLOTTED ON: 4/13/2022 12:45:56 PM

FILE NAME:

25 HIGH STREET, LOT 1
BROOKVILLE, MD 20833

PLAT DATA

ADDITION TO BROOKE GROVE
LOT 1
PARCEL 770
OLNEY 8TH ELECTION DISTRICT
MONTGOMERY COUNTY, MD

TOWN OF BROOKEVILLE:
ZONED: HISTORIC VILLAGE RESIDENTIAL

FRONT SETBACK= 15'
SIDE SETBACKS= 8'
REAR SETBACK= 40'

15,000 SF (0.344 ACRES)

BUILDING TO BE FULLY SPRINKLERED IN ACCORDANCE WITH 2018 IRC & NFPA13D

REVIEWED
By Michael Kyne at 1:32 pm, May 23, 2022

APPROVED
Montgomery County
Historic Preservation Commission

GRAPHIC SYMBOLS

- A / A-5 — SECTION SHEET NO.
- A / A-5 — SECTIONAL DETAIL SHEET NO.
- A / A-5 — DETAIL TARGET, ENLARGEMENT SHEET NO.
- N / A-12 — EXTERIOR ELEVATION SHEET NO.
- N / W 2 E / A-12 / S — INTERIOR ELEVATION SYMBOL DRAWING NO. SHEET NO.
- ELEV. 42.00 — DATUM ELEVATION
- 106 — ROOM NUMBER
- 4 — DOOR NUMBER
- W1 — WINDOW TYPE
- SF1 / A-6 — STOREFRONT ELEVATION
- 1 — REVISION NUMBER
- P1 — PARTITION TYPES SEE SCHEDULE
- T — TEMPERED GLASS

LIST OF DRAWINGS

001	COVER SHEET
002	SPECIFICATIONS
003	DOOR & WINDOW SCHEDULES
EC001	THERMAL ENVELOPE
EC002	THERMAL ENVELOPE
EC003	ENERGY CALCULATIONS
SITE	BUILDING PERMIT SITE PLAN
A100	BASEMENT PLAN
A101	FIRST FLOOR PLAN
A102	SECOND FLOOR PLAN
A103	ROOF PLAN
A200	FRONT ELEVATION
A201	RIGHT SIDE ELEVATION
A202	REAR ELEVATION
A203	LEFT SIDE ELEVATION
A300	BUILDING SECTION
A301	BUILDING SECTION
A302	BUILDING SECTION
A303	DETAILS
A304	DETAILS
A700	GARAGE PLANS
A701	GARAGE ELEVATIONS
A702	GARAGE SECTIONS & DETAILS
S0	FOUNDATION PLAN
S1	FIRST FLOOR FRAMING PLAN
S2	SECOND FLOOR FRAMING PLAN
S3	ROOF FRAMING PLAN
SD0	FOUNDATION DETAILS
SD1	FRAMING DETAILS
SD2	FRAMING DETAILS
SD3	FRAMING DETAILS
SG	GENERAL NOTES
SWB1	FIRST FLOOR WALL BRACING PLAN
SWB2	SECOND FLOOR WALL BRACING PLAN
SWB3	WALL BRACING DETAILS & SCHEDULE

CALCULATIONS

BASEMENT:	
FINISHED:	1,323.1 SF
UNFINISHED:	147.5 SF
TOTAL:	1,470.6 SF
FIRST FLOOR:	1,618.5 SF
FRONT PORCH:	178.9 SF
REAR PORCH:	207.6 SF
SIDE PORCH:	34.3 SF
SECOND FLOOR:	1,485.4 SF
DETACHED GARAGE:	484 SF
TOTAL GFA:	5,479.3 SF
HOUSE FOOTPRINT:	2,033.4 SF

LOT COVERAGE:

MONTGOMERY COUNTY
LOT= 15,000 SF
15,000 SF- 6,000 SF= 9,000 SF
9,000 SF x .001= 9.0%
30%- 9%= 21% MAX COVERAGE (3,150 SF)
2,102.5 SF/ 15,000 SF= 14.0%

MATERIAL SYMBOLS

- EARTH
- STEEL
- FINISH WOOD
- ROUGH LUMBER BLOCKING
- SLAT BOARD
- CONCRETE
- BRICK
- CONCRETE MASONRY UNIT
- GYPSUM SHEATHING
- ACOUSTICAL TILE

ABBREVIATIONS

ABOVE FINISH FLOOR	AFF	EACH	EA	INTERIOR	INT	PLATE	PL	VERTICAL	VERT
ACOUSTIC	ACST	EAST	E			PLUMBING	PLMB	VESTIBULE	VEST
ADJUSTABLE	ADJ	ELECTRIC, ELECTRICAL	ELEC	JANITOR'S CLOSET	JC	PLYWOOD	PLYWD	VINYL COMPOSITE TILE	VCT
AIR CONDITIONING	A/C	ELEVATION	EL	JOINT	JT	POLYVINYL CHLORIDE	PVC	VOLTS	V
AIR HANDLING	AH	ELEVATOR	ELEV	JOIST	JST	POUND	LB		
AIR HANDLING UNIT	AHU	EMERGENCY POWER	EM	JUNCTION BOX	JB	POUNDS PER SQUARE INCH	PSI	HALLBOARD	HB
ALTERNATE	ALT	EMPTY CONDUIT	EC			PREFABRICATED	PREFAB	WELDED WIRE FABRIC	WWF
ALTERNATE CURRENT	AC	ENGINEER	ENGR	LAMINATED	LAM	PREFINISHED	PREFIN	WIDTH	W
ALUMINUM	AL	ELECTRIC WATER COOLER	EWC	LAVATORY	LAV	PRELIMINARY	PRELIM	WINDOW	WDW
AMPERES	AMP	EXHAUST	EXH	LEFT HAND	LH			WITH	W/
ANCHOR BOLT	AB	EXISTING	EX	LENGTH	L	QUARRY TILE	QT	WITHOUT	W/O
ARCHITECT	ARCH	EXPANSION	EXP	LIBRARY	LIB			WOOD	WD
AT	@	EXPANSION JOINT	EXP JT	LINEAR FEET	LF	RADIUS	RAD, R		
AVERAGE	AVG	EXTERIOR	EXT	LONG LEG HORIZONTAL	LLH	REFRIGERATOR	REF	YARD	YD
				LONG LEG VERTICAL	LLV	REINFORCING	REINF		
BEAM	BM	FAHRENHEIT	F			REQUIRED	REQD		
BOARD	BD	FEET PER MINUTE	FPM	MAINTENANCE	MAINT	RESILIENT	RES		
		FEET, FOOT	FT	MANUFACTURER	MFR	RETURN AIR	RA		
CABINET	CAB	FINISH	FIN	MASONRY	MAS	REVISION	REV		
CATALOG	CAT	FIRE EXTINGUISHER CAB.	FEC	MASONRY OPENING	MO	RIGHT HAND	RH		
CEILING	CLG	FLOOR	FL	MAXIMUM	MAX	ROOM	RM		
CENTERLINE	CL	FLUORESCENT	FLOUR	MECHANICAL	MECH	ROUGH OPENING	RO		
CERAMIC TILE	CT	FIRE RATED	FR	MEDIUM	MED				
CLOSET	CLO			MEZZANINE	MEZZ	SCHEDULE	SCHD		
COLUMN	COL	GAUGE	GA	MINIMUM	MIN	SECTION	SECT		
COMPANY	CO	GALLON	GAL	MISCELLANEOUS	MISC	SERVICE SINK	SS		
CONCRETE	CONC	GALLONS PER MINUTE	GPM	MOUNTED	MTD	SIMILAR	SIM		
CONCRETE MASONRY UNITS	CMU	GALVANIZED	GALV	MULLION	MUL	SOUND TRANSMISSION	STM		
CONFERENCE	CONF	GENERAL CONTRACTOR	GC			SPECIFICATION	SPEC		
CONTINUOUS	CONT	GROUNDED FAULT INTERUPT.	GFI	NOT IN CONTRACT	NIC	SQUARE	SQ		
CONTROL JOINT	C.J	GYPSUM	GYP	NOT TO SCALE	NTS	STANDARD	STD		
COORDINATE	COORD	GYPSUM WALLBOARD	GWB	NUMBER	#, NO	STAND PIPE	ST		
CORRIDOR	CORR					STAINLESS STEEL	SS		
CUBIC FEET	CF	HANDICAPPED	HDCP	OFFICE	OFF	STATION	STA		
CUBIC FEET PER MINUTE	CFM	HARDWARE	HDW	ON CENTER	OC	STEEL	STL		
		HARDWOOD	HDWD	OPENING	OPNG	STORAGE	STOR		
DEDICATED	DED	HEIGHT	HGT, H	OPPOSITE	OPP	STRUCTURAL	STRUCT		
DEPARTMENT	DEPT	HERTZ	HZ	OUNCE	OZ	SUSPENDED CEILING	SUSP		
DEPTH	D	HOLLOW METAL	HM	OVERALL	OA				
DETAIL	DET	HORIZONTAL	HORIZ	OVERHEAD	OH	TELEPHONE	TEL		
DIAGONAL	DIAG	HORSE POWER	HP			THICK OR THICKNESS	THK		
DIAMETER	DIA	HOT WATER HEATER	HWH	PAINTED	PTD	THRESHOLD	THRSLD		
DIMENSION	DIM	HOUR	HR	PANEL	PNL	TILE	T		
DISHWASHER	DW			PARTITION	PTN	TO BE SELECTED	TBS		
DOOR	DR	INCH	IN	PERPENDICULAR	PERP	TONGUE & GROOVE	T & G		
DOWN	DN	INFORMATION	INFO	PERSONAL COMPUTER	PC	TOP	T		
DRAWING	DWG	INSIDE DIAMETER	ID	PHASE	PH	TYPICAL	TYP		
DRINKING FOUNTAIN	DF	INSULATED, INSULATION	INSUL	PLASTIC LAMINATE	P LAM				

PROJECT INFORMATION

CLIENT/CONTRACTOR
PHIL SARDELIS
10776 TUCKER STREET
BELTSVILLE, MD 20705
240-417-5333
philsardelis@gmail.com

ARCHITECT
GTM ARCHITECTS
CONTACT: NATE WHITE
7735 OLD GEORGETOWN ROAD
BETHESDA, MD 20814
(240) 333-2056
nwhite@gtmarchitects.com

CIVIL ENGINEER
CAS ENGINEERING
CONTACT: JARED SIMS CARHART, PD, MSE
10 SOUTH BENTZ STREET
FREDERICK, MD 21701
301-703-2346 (O)
303-217-1152 (C)
jcarhart@casengineering.com

STRUCTURAL ENGINEER
strucBIM ENGINEERS
CONTACT: KAUSHAL KANSARA, P.E.
20130 LAKEVIEW CTR. PLZ.
SUITE 400
ASHBURN, VA 20147
(703) 405-9732 (C)
kaushal@strucbim.com

PLANS PREPARED BASED ON THE FOLLOWING CODES:
INTERNATIONAL RESIDENTIAL CODE 2018

GTM ARCHITECTS
7735 OLD GEORGETOWN ROAD
SUITE 700
BETHESDA, MD 20814
(240)333-2000
(240)333-2001 FAX
WWW.GTMARCHITECTS.COM

Seal

STATE OF MARYLAND — NATHAN WHITE — 22613 — ARCHITECT

I certify that these documents were prepared or approved by me, and that I am a duly licensed architect under the laws of the State of Maryland, license number 22613, Expiration Date: 12/06/2022.

Consultant

Project
25 High Street
LOT 1
25 HIGH STREET, BROOKEVILLE, MD 20833

Owner

Developer

Issue Description	Date
PERMIT SET	4-11-2022

GTM Project No.	18.0320
Checked By	GTM
Drawn By	NW/KF
Scale	AS NOTED

Sheet Title
COVER SHEET

Sheet No.
001

COPYRIGHT, 2019 GTM ARCHITECTS, INC.

FILE NAME:

5 4 3 2 1

D C B A

SPECIFICATIONS FOR RESIDENTIAL CONSTRUCTION

The purpose of the following specifications is to establish the level of quality required for both materials and workmanship. These notes are intended as a general outline; specific and additional requirements are indicated on the drawings. Unless noted otherwise in the contract documents, all Products and Materials shall be installed in strict compliance with the manufacturer's recommendations. The contractor should also note that not all of the items mentioned below may apply to the project.

GENERAL REQUIREMENTS

1. All work shall conform to the International Residential Code (IRC), 2018 edition and all applicable sections of the Montgomery County code for single family construction and applicable building codes including (but not limited to) IECC 2018.
2. The General Contractor shall stake off area of new construction and designate trees and shrubs for removal as required. Protect all landscaping beyond the areas of construction.
3. The General Contractor shall coordinate phasing and time limits for new construction with the Owner, so as to establish an acceptable payment schedule related to the status of the project.
4. Any permits required for the project shall be obtained by the General Contractor, unless informed otherwise by the Architect that the permit has been obtained.
5. The General Contractor shall store materials and equipment in a safe and suitable place during the construction process. The Owner is not responsible for any losses of material. The contractor shall be responsible for damage to installed and (or) stored materials until substantial completion or as otherwise noted in the contract document.
6. All debris shall be periodically removed from the site so as to not create a physical or visual hazard to the Owner.
7. The General Contractor shall be licensed in Montgomery County, Maryland, and shall guarantee the project labor and materials for a period of one year after the Architect determines the work to be substantially complete, as per county laws.
8. The General Contractor shall provide competent daily supervision of the project.
9. The General Contractor shall notify the related authorities for inspection of the work as related to the specific areas required by the county.
10. The General Contractor shall Carry Workmen's Compensation Insurance for every person employed by him on the premises and shall maintain such insurance in full force during the entire time of this contract. The General Contractor shall carry Comprehensive General and Automotive Liability Insurance of $25,000 to $50,000 minimum. These requirements can be amended by the Owner if specified by the contract.
11. All drawings, specifications, and copies furnished by the Architect are the documents for the construction of this project only and shall not be used in any other circumstance.
12. The General Contractor shall carefully study the contract documents and report to the Architect any error, omission, or inconsistency they may discover.
13. The General Contractor shall provide and pay for all labor, materials, equipment, tools, machinery and other facilities and services necessary for proper execution and completion of the work, and shall guarantee no mechanic liens against the project at completion.
14. The Contract Sum is stated in the agreement and is the total amount payable by the Owner, which designates the addition, deletion, or revision to the contract. The Change Order must also designate the change in the original contract sum.
15. At least seven days before the date of each progress payment established by the agreement, the General Contractor shall submit to the Architect and Owner an itemized application designating which portion of the work has been completed.
16. The Contractor shall verify dimensions prior to construction, and all discrepancies shall be brought to the attention of the Architect so that clarifications can be made. The Contractor shall field verify all dimensions related to existing conditions. Written dimensions take precedence over scaled sizes. Do not scale drawings to determine missing dimensions.
17. The Contractor shall be responsible to have new utility line services (gas, electric, telephone) installed to the house connection/meter location.

DEMOLITION NOTES

1. Every care shall be taken during demolition to protect the house by means of temporary supports and braces as necessary to prevent any structural failure during removal and replacement of existing structural members.
2. Temporary walls and dust barriers shall be installed as necessary to prevent circulation of dirt and dust into portions of the house that are not part of the work.
3. All dashed walls, fixtures, windows, etc., are to be removed. See Demolition Sheets for additional information.
4. Conduct all demolition operations in compliance with applicable codes and ordinances.
5. Coordinate demolition with work of subcontractors.
6. Maintain the existing structure in a watertight condition at all times.
7. Provide the necessary enclosures to allow the owner to maintain comfortable temperatures within the occupied portions of the home during construction.

GENERAL STRUCTURAL NOTES

1. Work shall be done in accordance with the International Residential Code (IRC), 2018 Edition.
2. The design gravity live loads are as follows:
   - Roof load (snow): 30 LL + 15 DL = 45 PSF
   - Living Spaces: (1st Floor) 40 LL + 15 DL = 55 PSF
   - Sleeping Spaces: (2nd Floor) 30 LL + 15 DL = 45 PSF
   - Exterior Decks: 60 LL + 15 DL = 75 PSF
   - Live Load Deflection Limitation for floors and stairs shall be L/360
   - Live Load Deflection Limitation for roofs shall be L/240

FOUNDATIONS

1. The foundation for the structure has been designed for the assumed bearing pressure of 1,500 PSF. This is to be verified by the contractor prior to the footings being poured. It is also assumed that there is no water condition present.
2. Basement walls have been designed for an assumed equivalent fluid pressure of 55 PSF.
3. Excavations for spread footings and continuous footings shall be cleaned and hand tamped to a uniform surface.
4. Slabs on grade shall be underlaid by a minimum of 4" of granular material having a maximum aggregate size of 1.5 inches and no more than 2% fines. Prior to placing the granular material, the floor subgrade shall be properly compacted, proofrolled, free of standing water, mud, and frozen soil. Before placement of concrete, a (min. 6 mil poly) vapor barrier shall be placed on top of the granular fill and sealed to vertical foundation walls.
5. Bottoms of all exterior footings shall be 2'-6" minimum below finished grade. Footings shall project a minimum of 12" into undisturbed existing natural ground having allowable bearing capacity stated. Depths of footings subject to change if soil conditions are other than assumed.

ENERGY CONSERVATION

1. The following provisions for thermal resistance meet or exceed the requirements stipulated by the 2018 International Energy Conservation Code (IECC), climate zone 4A. These values are the minimum acceptable. See drawings for specific values required for the project.
2. Insulation

		IECC
A.	Ceiling (of uppermost story)	R-49, or R-38 continuous
B.	Vaulted Ceiling sf or 20% of total insulated ceiling area R-30 allowance	R-49 w/lesser of 500
C.	Frame walls (with storm window or double glazing)	R-20 or 13+5 (exterior)
D.	Rim Joists	Equal to wall below
E.	Floors over unheated spaces (including floor overhangs)	R-38
F.	Masonry walls (enclosed heated living areas)	R-13 or R-10 continuous
G.	Slab on grade (heated space) 24" Perimeter Insulation	R-10
H.	Windows	U-0.32 SHGC-0.40
I.	Doors	See section R402.3.4

3. Air Infiltration
   - A. Provide ¼" x 5.5" compressible sill sealer between foundation wall and all sill plates. Sill sealer shall be set such that no gaps exist at sealer butt joints.
   - B. Windows: Not exceeding three tenths (0.3) CFM of sash crack
   - C. Sliding glass doors: not exceeding three tenths (0.3) CFM per square foot of door area
   - D. Swinging doors: Not exceeding five tenths (0.5) CFM per square foot of door area. Provide 1" compressible sill sealer between foundation wall and all sill plates.
   - E. Building thermal envelopes shall be tested per IECC R402.4.1.2 and verified as having air leakage not to exceed 3 air changes per hour.
   - F. Recessed lighting in the thermal envelope shall comply with IECC R402.4.5
   - G. Systems duct and piping installation shall comply with IECC R403 including Whole-House Mechanical Ventilation system installation.

TERMITE CONTROL SOIL TREATMENT

1. Treat soil with Bayer Corporation, Premise 75, in strict accordance with manufacturer's recommendations.
2. Remove all extraneous sources of wood cellulose and other edible materials such as wood debris, tree stumps and roots, stakes, formwork, and construction waste wood from soil within and around foundations. Loosen, rake, and level soil to be treated except previously compacted areas under slabs and footings.
   - A. Slabs-on-Grade and Basement Slabs: Under ground-supported slab construction, including footings, building, slabs, and attached slabs as an overall treatment. Treat soil materials before concrete footings and slabs are placed.
   - B. Foundations: Adjacent soil including soil along the entire inside perimeter of foundation walls, along both sides of interior partition walls, around plumbing pipes and electric conduit penetrating the slab, and around interior column footers, piers, and chimney bases; also along the entire outside perimeter, from grade to bottom of footing. Avoid soil washout around footings.
   - C. Crawlspaces: Soil under and adjacent to foundations as previously indicated. Treat adjacent areas including around entrance platform, porches, and equipment bases. Apply overall treatment only where attached concrete platform and porches are on fill or ground.Crawlspaces used as plenum spaces strictly follow manufacturer's recommendedations.
   - D. Along driplines of roof overhangs without gutters.
   - E. Where condensate lines from mechanical equipment drip or drain to soil.
   - F. At plumbing penetrations through ground-supported slabs.
   - G. Other sites and locations as determined by licensed installer.

WARRANTY

Special Warranty: Manufacturer's standard form, signed by Applicator and Contractor certifying that termite control work, consisting of applied termiticide treatment, will prevent infestation of subterranean termites. If subterranean termite activity or damage is discovered during warranty period of five (5) years from Substantial Completion, re-treat soil and repair or replace damage caused by termite infestation.

CONCRETE

1. All concrete construction shall conform to the latest A.C.I. code 332 and shall comply with ACI 117, "Specifications for Tolerances for Concrete Construction and Materials" unless modified by requirements in the Contract Documents.
2. Concrete shall have natural sand fine aggregates and normal weight coarse aggregates conforming to ASTM C33, Type 1 Portland Cement conforming to ASTM 150, and shall have a minimum 28-day compressive strength (F/C) as follows:
   - F/C = 2,500 PSI for footings, interior slabs on grade (except garages) and fill in concrete blocks
   - F/C = 3,000 PSI for foundation walls exposed to weather.
   - F/C = 3,500 PSI for drives, porches, walks, steps, and garage slabs.
   - F/C = 4,000 PSI for precast concrete units.
3. All poured in place concrete exposed to weather conditions, including the garage floor, shall be air entrained by 6% of concrete volume. No calcium chloride or other admixtures shall be used except as approved in writing by the Owner.
4. Slabs on grade: except where otherwise noted, shall be min. 4" thick, reinforced with 6x6 W1.4xW1.4 WWF Lap mesh 6" in each direction. Slab shall be placed on a layer of 6 mil polyethylene, sealed to fdn. walls, over a 4" layer of washed gravel. Refer to drawings for location of thermal insulation.
5. Concrete finish: Exposed exterior steps, stoops and slabs shall first have a steel trowel finish and then a very light broom finish. Exposed interior and garage shall receive a steel trowel finish.
6. Expansion joints: Non-organic, Owner approved, expansion joint material shall be cast in place where slabs abut masonry or concrete walls to prevent bonding between the two materials.
7. Curing: Exposed concrete surfaces shall be sealed with an approved chemical curing compound within one hour of the final troweling. Curing compound label shall state that its use will not interfere with adhesion of subsequent floor finishes.
8. Reinforcing steel: Reinforcing steel for the ties shall be intermediate grade deformed billet steel conforming to ASTM spec. A615-40. All other reinforcing steel shall conform to ASTM spec. A615-60. Welded wire fabric to conform to ASTM A-185. Fabric shall be supplied in flat sheets and lapped to mesh at splices. All reinforcing shall be detailed, fabricated and installed in accordance with the latest detailing manual A.C.I. 315.
9. Reinforcement designated as "continuous" shall lap 36 bar diameters at splices unless noted otherwise.
10. Horizontal footing and walls: reinforcement shall be continuous and shall have 90 degree bends and extensions, or corner bars of equivalent size lapped 36 bar diameters, at corners and intersections.
11. Footings:
    - A. Bottom of footings shall extend a minimum of 2'-6" below any surface subject to freezing: footings shall extend at least 12" into undisturbed soil or set on controlled compacted fill. Depth of footing subject to change if soil conditions are other than assumed. Bearing value of soil is assumed to be 1,500 PSF with no water condition present. Minimum bearing value of controlled fill shall be certified by a licensed geotechnical engineer.
12. Anchor bolts: set anchor bolts or approved straps as shown. Bolts for wood sill plates shall be ½" in diameter and project 8" into concrete; set straps or bolts 12" max from end of any plate and 6'-0" max O.C. spacing, unless shown otherwise.

MASONRY

1. Brick shall conform to ASTM C-62. Mortar shall conform to federal specifications SS-C-18IE-type II. Lay brick only when outside temperature is 45° F and rising. Protect all work from cold and frost and ensure that mortar will cure without freezing. Calcium chloride and antifreeze admixture will not be acceptable.
2. Bearing steel and wood beams shall be supported on solid masonry piers as indicated. Other structural members (lintels, etc.) shall be supported on 8" of solid masonry. All beams and lintels shall have minimum horizontal bearing of 4".
3. Anchor bolts: Set anchor bolts or approved anchor straps as required. Bolts for wood sill plates shall be ½" diameter and project 16" into masonry. Set bolts or straps 12" max. from end of any plate.
4. CMU walls shall have horizontal wire joints reinforcement at 16" O.C. vertically, or as indicated.
5. Provide 4" solid masonry on all sides of joists or beams entering masonry party walls.
6. Brick Veneer:
   - A. Secure brick veneer with 16 GA hot-dipped zinc coated wall ties at 16" O.C. horizontally and vertically.
   - B. Provide flashing at first course above grade, at lintels, sills and elsewhere as shown. Provide $\frac{3}{16}$" diameter tube weeps or cellular plastic head joint-type weeps at 24" O.C.
   - C. Provide through-wall flashing above all unsheltered openings. Flashing shall be end-dammed at all terminations.
   - D. Install high-density polyethylene or polyester cavity drainage material, equal to "mortar net," above all flashing. Material shall be sized to fill the width of the cavity.
7. Stone Veneer:
   - A. Vapor permeable weather-resistive barriers: two-ply asphalt saturated Kraft Grade D breather type sheathing paper.
     - Basis of design is FortifiberΦ / two-ply super jumbo texΦ 60 minute
     - Reference standard; federal specification W-B-790A, Type I, Grade D, Style 2
     - Moisture vapor transmission: 35 grams minimum; ASTM E 96
     - Water resistance: 150 minutes (Professional), ASTM D 779
8. C.M.U.'s to have water repellent block admixture; 'Dry-Block' by W.R. Grace recommended.
9. Exterior mortar to have water repellent admixture.
10. Unless noted otherwise, tool all joints concave.
11. Fully bed in mortar face shells and webs of first course of CMU.
12. All masonry joints shall be fully filled with mortar, including head joints.

ADHERED MASONRY VENNER

1. The adhered Masonry Veneer (AMV) system shall be installed in compliance with IRC R703.12 and ASTM C1780 "Standard Practice for Installation Methods for Cement-based Adhered Masonry Veneer" and The Masonry Veneer Manufacturers Associations (MVMA) "Installation Guide and Detailing Options for Compliance with ASTM C1780". The cladding unit manufacturers installation recommendations are also to be followed.
2. Two separate layers of Water Resistant Barrier (WRM) shall be provided over the sheating substrate.
3. Galvanized lath shall be securely fastened to the wall structure with approved fasteners. A mortar scratch coat shall fully encapsulate the lath and have a scored surface.
4. Cladding units shall be set over a fully cured mortar scratch coat. Cladding units shall be adjusted to comply with the cladding unit manufacturers recommendations and ASTM C1780. Doors and windows shall be adjusted to provide proper operation of opening.
5. Joints shall be filled with "thumb-print hard" adhesive mortar with a slightly concave profile, unless noted otherwise. Prior to joint filling a field mock-up shall be provided for color and workmanship approval.

STEEL

1. Structural steel shall conform to ASTM A36
2. Steel beams shall conform to ASTM A572 Grade 50.
3. All steel angles, lintels, beams, columns, etc. are to be shop primed with red lead or red oxide primer or approved equal. Structural steel at or below grade shall be painted with two coats on an asphaltic base paint and protected with a minimum of 2" solid masonry or concrete.
4. For all openings or recesses in brick or brick-faced masonry walls not specifically detailed, provide one steel angle for each 4" of wall thickness. Provide lintels according to the schedule below:

Lintel	Masonry Opening	Min. Bearing
L 3-1/2 X 3-1/2 X 1/4	Up to 3'-0"	4"
L 3-1/2 X 3-1/2 X 5/16	3'-1" to 4'-0"	6"
L 4 X 3-1/2 X 1/4	4'-1" to 5'-0"	6"
L 4 X 3-1/2 X 5/16	5'-1" to 6'-0"	6"
L 5 X 3-1/2 X 5/16	6'-1" to 7'-0"	8"
L 6 X 4 X 3/8	7'-1" to 8'-0"	8"

Note: For openings greater than 8'-0", consult with Architect and Engineer.

WOOD & CARPENTRY

1. Unless otherwise noted on drawings, all structural wood members shall be #2 Southern Pine or equal, with the following combination of unit stresses:

Extreme fiber stress in bending	1,200 PSI
Compression parallel to the grain	1,000 PSI
Compression perpendicular to the grain	565 PSI
Modulus of Elasticity Shear Stress	1,500,000 PSI

   Installation Tolerance; walls - a maximum out-of-plumb limit of 1/4" in 10' vertically and horizontal in-plane misalignment of 1/8" from adjacent framing shall be achieved. Plates and floors shall be installed within a 1/4" maximum tolerance for straightness relative to the intended location.
2. Manufactured joists and trusses (if shown on drawings) must be designed and certified by a licensed engineer and submitted to the Architect and local building department for approval.
3. Roof rafters and/or trusses shall be connected at each bearing point with one prefab-90 PSI galvanized rafter tie (hurricane clip) by Simpson or approved equal. Similarly, floor joists and trusses shall be connected with one prefabricated joist hanger. Each anchor shall be 18 GA minimum thick.
4. Provide double joists under all parallel partitions, at joists that support headers, and at headers that support joists. Use joist hangers where applicable.
5. All joists and rafters shall be rigidly braced at intervals not exceeding 8'-0".
6. Double studs at header bearing, double joists and rafters at all openings according to schedule below (unless noted otherwise on drawings):
   - Double 2 x 4 Up to 3'-0"
   - Double 2 x 6 Up to 4'-0"
   - Double 2 x 8 Up to 5'-0"
   - Double 2 x 10 Up to 7'-0"
   - Double 2 x 12 Up to 8'-0"

   All double headers and joists shall be joined with a minimum of two rows of 16 d nails 12" on center.
7. Provide blocking, banding, crush blocks, stiffeners, or rim joists, as required, at joist ends.
8. Floor joists shall have a minimum bearing of 2" on framed walls. All beams shall have minimum bearing of 4" bearing on all supports. Provide moisture protection to end of beams pocketed into masonry walls.
9. Wood joists, studs, and beams shall not be cut or notched unless authorized by the Architect. Drilled holes shall be centered at mid-depth of the member and the hole diameter shall not exceed ⅓ the actual depth of the member. No holes shall be drilled within 2' from the ends or within the middle ⅓ of the span. Provide 4" clear between holes.
10. Existing conditions shall be verified by the Contractor. Any existing damaged wood members shall be identified and replaced by the Contractor.
11. Contractor shall be responsible for providing necessary bracing and shoring of existing members and walls while altering the structure.
12. Provide 2x4 intermediate blocking at all bearing and non-bearing partitions.
13. All plywood shall be APA span rated. Use exterior grade plywood wherever edge of face will be exposed to weather. Interior plywood exposed to weather during construction shall be Exposure I min.
    - A. Exterior wall sheathing shall be ½" plywood unless noted otherwise.
    - B. Subflooring shall be ¾" tongue and groove plywood, glued and screwed to the floor joists as per APA recommendations.
    - C. Where spacing of roof structure members is 16" O.C., roof sheathing shall be ½" plywood (¾" where roofing is slate or tile). Where spacing of roof structure members is 24" O.C., roof sheathing shall be ⅝" plywood (¾" where roofing is slate or tile). Provide "H" clips at butt joints of roof sheathing.
14. MICRO-LAM L.V.L. (laminated veneer lumber) beams shall be manufactured by Trus Joist MacMillan or approved equal. Beams shall be installed according to manufacturer's recommendations. When fastening two or more beams together, provide a minimum of two rows of 16 d nails 12" on center.
15. TJI Floor Joists are to be manufactured by Trus Joist MacMillan or approved equal. Install per manufacturer's recommendations.
16. The following wood elements are to be pressure treated with preservative, bearing the AWPA standard use category label UC3B or UC4B (for ground contact):
    - A. Sill plates resting on concrete or masonry walls.
    - B. Sill plates resting on concrete slabs on grade.
    - C. Joists which enter concrete or masonry walls and have less than ½" clearance on tops, sides, and ends.
    - D. Sleepers resting directly on concrete slabs.
    - E. Exterior porch and deck framing, decking, and stairs.
17. Fasteners, hangers, and metal accessories used in pressure treated wood construction shall be type 304 or 316 stainless steel. Treated lumber shall not be placed in contact with aluminum flashing or other aluminum components.
18. Exterior Wood Trim:
    - A. All exterior wood trim shall be clear pine or redwood.
    - B. All trim shall be primed on 6 sides (including cut ends) prior to installation.
    - C. All outside corners shall be mitered and no end grain shall be exposed to view. No butt joints will be accepted
19. Exterior Synthetic Trim shall be "AZEK," with traditional smooth surface. Fasteners, joint cement, and installation procedures shall be in accordance with manufacturer's recommendations.
20. Siding: Refer to drawings for type specified.
    - A. Cement board shall be non-asbestos fiber-cement material complying with ASTM Standard Specification C1186 Grade II, Type A. Materials shall be equal to those manufactured by James Hardie Building Products.
    - B. Wood siding and sidewall Shingles shall be kiln dried Western Red Cedar, "Clear V.G. Heart" grade for clear and transparent stain finishes, and "A Clear" grade for semi-transparent stain or opaque finishes. Semi-transparent stain or opaque finish shall be applied in strict accordance to manufacturer's recommendations; including, but not limited to, substrate preparation and primer/sealer application to all wood surfaces (6-sides). Fasteners shall generally be type 304 stainless steel, but shall be type 316 for coastal applications. Install wood siding and shingle products over "Cedar Breather" by Benjamin Obdyke Inc. and 30# felts in accordance with manufacturer's instructions. Siding installation and finishing shall be as recommended by the Western Red Cedar Lumber Association. Siding shall be sealed prior to installation, fasteners shall be concealed where possible or arranged in a uniform pattern.
21. Coordinate all floor and wall framing with ductwork. Refer to mechanical notes.
22. Folding Attic Access Ladder shall be 22 ½" x 44" with self-trimming flange, pre-finished door panel, and gas-piston counterbalance. The door panel shall have continuous integral weatherstripping, R-10 insulation, and two key operated locking pins to draw the door tight. Ladder steps shall be pine, doweled to pine stringers. Contact Resource Conservation Technology at 410-366-1146. Additional insulation hood shall be provided to meet required insulation value per IECC R402.2.4.

DOORS AND WINDOWS

1. AWI "Custom Standard" shall apply to the workmanship, installation and finishing of wood doors and windows components.
2. The tops, bottoms, and edges of all doors shall be finished.
3. Any defects that prevent the door or window from serving its intented purpose satisfactorily shall be rejected, such as material that is crooked, warped, bowed, chatter marked, plane or tool marked, chipped, or otherwise defective.
4. Doors and windows shall be adjusted to provide proper operation of opening.

RADON DETECTION AND TREATMENT

1. The Contractor shall provide a venting system consisting of a minimum of 3" diameter ABS, PVC or equivalent gas-tight plumbing pipe inserted into the sub-slab gravel base (at all new concrete slabs). A 'T' fitting or equivalent method shall be used to ensure that the pipe opening remains with the sub-slab permeable material. The pipe shall terminate at least 12" above the high side of the roof penetration. Contractor shall coordinate location of pipe with Architect prior to installing the pipe.
2. Install, per IRC, 2018 edition, Appendix F 'Radon Control Methods.'
3. The Contractor shall provide any other measures as required by local codes.

VENTILATION

1. Where attics are indicated to be ventilated, they are to be vented in one of the following ways (refer to drawings for specifics):
   - A. Continuous ridge venting and continuous soffit venting. Ridge vent shall be by Cor-A-Vent or approved equal. Continuous screen soffit vents shall be a minimum of 2" wide. Circular louver vents between each rafter may be used at the soffit if shown on the drawings.
   - B. Screen louvers or vents with an open area equal to one square foot for every 300 square feet of attic space.
2. Provide foundation vents for all crawl spaces. Refer to drawings for locations.
3. Venting for appliances and exhaust fans:
   - A. Provide venting to the exterior as per manufacturer's recommendations for all appliances. Location of ductwork and vent on exterior shall be approved by Architect prior to installation.
   - B. Provide exhaust fans for bathrooms, etc., as shown on drawings. Location of ductwork and vent on exterior shall be approved by Architect prior to installation. Ducts within unconditioned spaces shall be insulated to prevent condensation.
4. Provide Whole-House ventilation system to comply with IECC R403.4

MOISTURE PROTECTION

1. Appropriate sealants shall be selected for each substrate depending upon location (interior or exterior), humidity, moisture conditions, and traffic conditions. Use primers as required.
2. Color of caulking shall be coordinated with adjacent materials and must be approved by Architect prior to application.
3. Joint fillers shall be used:
   - A. To control the depth of sealants in joints.
   - B. To meet the requirements for resilient separations in horizontal joints in floor, pavements, patios, sidewalks, and other light traffic areas.
4. Bond breakers shall be used to prevent adhesion to more than two surfaces.
5. Masonry foundations shall be parged to a thickness of ¾" minimum.
6. Waterproof all below grade foundation walls with a polymer-modified asphalt emulsion similar to TREMCO "TUFF-N-DRI Classic". Dry/ cured membrane thickness shall be minimum 40 mil. Installation and substrate preparation shall be per manufacturer's recommendations. Install subsurface drainage composite similar to CETCO "Aquadrain 10X" over the cured membrane with asphalt emulsion adhesive similar to Henry 111 Insulbond.
7. Footing drains shall be min. 4" in diameter and installed on the exterior of all foundations.
8. All flashing shall be installed according to the building code. An eave flashing strip of 40 mil. self-adhering rubberized asphalt sheet membrane shall be applied to extend from the edge of the roof to a point 24" min. inside the interior wall line of the structure, and at all valleys.
9. All membrane roofing to be approved by Architect prior to installation.
10. All roof shingles to be approved by Architect prior to installation.
11. Asphalt shingle roofs with slopes from 2 in 12 to 4 in 12 shall have two layers of #15 roofing felt applied in accordance with with the International Residential Code.
12. Flashing"
    - A. Through-wall and other concealed flashing shall be a composite of fiberglass fabric, 5 oz. copper and asphalt, equal to York Copper Fabric.
    - B. Exposed flashing shall be 16 oz. copper.
13. Painted aluminum drip strips shall be installed at the eave and rake edges of the roof sheathing for shingle roofs, and above window and door trim where indicated.
14. Exterior Insulation and Finish Systems (EIFS) shall be equal to Dryvit, Residential MD System, with Dryvit drainage mat installed between the secondary weather barrier and the insulation board.
15. Cedar roof shingles shall be No. 1, Blue Label, red cedar. Install over "Cedar Breather" by Benjamin Obdyke Inc. and 30# felts in accordance with manufacturer's instructions.
16. Standing seam roofing shall be 16 ounce copper with water-tight standing seams. For slopes greater than 3 in 12 provide #30 roofing felt underlayment on solid sheathing. For slopes 3 in 12 or less provide self-adhering 40 mil ice and water guard membrane over the entire area to receive standing seam roofing.

FINISHES

Gypsum Wallboard:

1. Gypsum wallboard shall be ASTM C-36 as follows:
   - A. Regular (½"): except where noted.
   - B. Water resistant (½"): at bathroom ceilings and walls that are not tiled.
   - C. Durock interior tile backer board (½"): at all surfaces that have tile.
2. Gypsum boards shall have tapered edges to accommodate joint reinforcement.
3. Provide edge corner beads, trim, taping, and joint compounds as required for the proper completion of the job. Materials shall be by U.S. Gypsum or approved equal.
4. Finishing requirements:
   - A. For typical walls and ceilings provide a Level 4 Finish as defined by the Gypsum Association.
   - B. For surfaces noted to receive semi-gloss or gloss paint provide a Level 5 Finish as defined by the Gypsum Association.

Hardwood Flooring:

1. Unless noted otherwise, provide wood strip flooring where shown on the drawings.
2. Wood strip flooring to be oak. Where abutting existing floor, new floor shall match existing in size and grain. Elsewhere, oak shall be "clear" grade, in accordance with the national Oak Flooring Manufacturer's Association.
3. Install flooring in strict accordance with the recommendation of the National Oak Flooring Manufacturer's Association.
4. After the floors have been sanded, the flooring contractor shall apply a minimum of four stain and urethane samples in two foot by two foot areas on the floor for the owner to review. The owner shall have a minimum of two days to make a selection.

Ceramic Tile:

1. Provide ceramic tile and accessories in accordance with the Tile Council of American Specifications 137.1, in colors and patterns to be specified by the owner.
2. Setting materials: comply with pertinent recommendations contained in the Tile Council of America "Handbook for Ceramic Tile Installation."
3. Installation: comply with ANSI A108.1, ANSI A108.2, and the "Handbook for Ceramic Tile Installation" of the Tile Council of America.
   - A. Extend tile into recesses and under equipment and fixtures to form a complete covering without interruptions.
   - B. Terminate tile neatly at obstruction, edges, and corners, without disruption of pattern or joint alignment.
   - C. Align joints when adjoining tiles on floor, base, trim, and walls are the same size.
   - D. Layout tile work and center the tile fields in both directions in each space or on each wall area.
4. Replacement reserve: Contractor shall furnish to the Owner one unopened box of additional tiles for future repairs and maintenance work.

Carpet:

1. Provide carpeting as indicated on the drawings. Refer to allowances on schedule sheet.

Vinyl Tile:

1. Installation of all vinyl composition tile (VCT) shall be done in a manner which conforms with:
   - ASTM E 648,
   - ASTM E 84, AND
   - ASTM E 662.
2. Replacement reserve: Contractor shall furnish Owner with one unopened box of additional tile for future repairs and maintenance.

Paint:

1. All paint and primers to be Benjamin Moore or approved equal. Refer to schedule for colors and types.
2. All surfaces to be painted shall receive one primer coat and two finish coats.
3. All paint shall be applied according to manufacturer's recommendations.

Architectural Woodwork and Trim:

1. All millwork trim and molding shall be installed accordingly to the quality of standards of the Architectural Woodwork Institute (AWI).
2. All interior trim and millwork shall conform to AWI "custom standards."
3. Flat trim shall be clear pine or approved equal.
4. All corners of trim and siding are to be mitered, except inside corners of interior running trim which shall be coped. Exposed end grains will not be accepted.
5. All millwork and trim shall be installed by craftsmen with experience in work of this type. All work shall be first class in every regard and consistent with the best practices of the trade.

FIRE AND LIFE SAFETY

1. Stairs:
   - A. 7¾" max rise
   - B. 10" min tread
   - C. 6'-8" min head room
   - D. Height of handrails shall be continuous, 34" (min) to 38" (max) above finished stair treads. Handrails required at stairs with 3 or more risers.
   - E. Guardrails shall be 36" (min) to 42" (max) above finished floor.
2. Provide a clear window opening of 5.7 square feet with no less than 20" clear wide and 24" clear high for sleeping area. The sill of this windows shall be no more than 44" above the finished floor.
3. Provide safety glass in all exterior doors, storm doors, sliding glass doors, shower doors, and tub enclosures above and adjacent to spas and tubs and where the glass is closer than 18" to the floor and exceeds 9 square feet in area.
4. Ground metal siding.
5. Smoke detectors shall be provided on every floor, in each bedroom and in each hall outside of bedrooms, and integrated with the electrical system with battery backup.
6. If a fuel-burning appliance, fireplace, or attached garage is present, an interconnected battery back up carbon monoxide alarm or detector must be installed outside all sleeping areas and on all floors. If fuel-buring appliance or fireplace is present in any sleeping area, an interconnected carbon monoxide alarm or detector must also be installed in that room as required per local jurisdiction.
7. Flues shall be class B except solid fuel flues, which shall be class A.
8. Top of flue shall be 2'-0" above any part of structure within 10'-0" of flue.
9. Interior finish of walls and ceiling shall have a flame spread rating not greater than Class III.
10. Carpeting shall meet federal regulation DOC FF-1.
11. Prefab fireplaces shall be (U.L.) rated and installed according to manufacturer's specifications.
12. Provide outside air for combustion in all prefab and masonry fireplaces.

ELECTRICAL AND LIGHTING NOTES

1. Electrical contractor shall size and arrange all circuits in accordance with the National Electric Code as well as all local codes. Service to be upgraded as required.
2. Wall outlets are to be mounted 1'-6" above finished floor unless noted otherwise.
3. Switches are to be mounted 4'-0" above finished floor unless noted otherwise.
4. Mounting heights are to the vertical center of the equipment to the finished elevation of the floor.
5. All new switch and outlet styles are to be approved by Owner prior to installation.
6. Provide hardwired smoke detectors on all floors, located as per Montgomery County Code.
7. Electrician shall locate all fixtures, switches, outlets, etc. prior to running wiring. Owner, Architect, and Electrician to meet at a mutually agreed upon time to review locations. The purpose of which is to allow for possible relocation prior to wiring.
8. Owner is allowed to add an additional ten (10) items (switches, cable, phone, outlet, etc., or any combination) at no additional charge to the owner.
9. Contractor shall determine, based on an on-site review of existing and proposed electrical systems, whether an electrical service heavy-up will be required, and shall include the costs of all required upgrades in their Contract Amount.
10. Provide door bell, transformer, and chime for front door and where indicated. In lieu of Owner's selection otherwise, price shall be based on the following: Illuminated Button - Destination Lighting product number 15921; Transformer - 16V; Chimes - Teiber Model CTSB-or STPW-, in Owner's choice of finish. Verify all selections and mounting locations with Owner prior to purchasing.
11. Per IECC R404.1 90% of installed lighting fixtures must contain high efficacy lamps.

MECHANICAL NOTES

1. All work shall be done in accordance with the International Residential Code (IRC), 2018 Edition, as well as IECC 2018 and other local codes including a compliant Manual J load calculation/ design in accordance with ACCA recommendations.
2. Unless otherwise indicated in Contract Documents, Contractor shall be delegated to design a fully functional and performing mechanical system in accordance with applicable mechanical codes and standards. Contractor shall submit all duct layouts and air handler locations (and thermostat locations) to the Owner and the Architect for approval prior to the commencement of framing. No extras will be given for any modification required to the framing due to ductwork.
3. All exterior unit locations to be coordinated with Owner and Architect.
4. Air conditioners shall be Energy Star rated and shall have a minimum 13 SEER rating with two zones each. Gas furnaces shall have a minimum Annual Fuel Utilization Efficiency rating of 90%.
5. Equipment will be Carrier or approved equal.
6. Ductwork will be galvanized sheet metal and flex.
7. Registers and return grilles are Hart & Cooley or equal.

PLUMBING NOTES

1. All work shall be done in accordance with the International Residential Code (IRC), 2018 Edition, as well as IECC 2018 and other local codes.
2. Contractor shall provide riser diagrams as required for permit, and shall submit to the Architect proposed locations of all waste and supply lines prior to the commencement of framing. No extras will be given for any modification required to the framing due to plumbing lines. Provide cast iron at vertical waste lines.
3. Unless otherwise indicated in Contract Documents. Contractor shall be delegated to design a fully functional and performing water supply and waste system in accordance with applicable plumbing codes and standards. Install water heater and reserve tank per requirements of the house with recirculate system.
4. Provide drain pans under all water heaters and washing machines, and pipe the pan to the sanitary drain upstream of a trap.
5. Contractor shall make a count of existing and proposed fixtures to determine whether a water or sewer upgrade will be required, and shall include the costs of all required upgrades in his Contract Amount. The count of existing fixtures shall be based on an on-site inspection.
6. Provide cast iron at vertical waste lines.
7. Locate plumbing clean out plugs in bottom ⅓" of wall, typical.

STEAM SHOWER

1. Wall construction: Provide ceramic tile over dryset or latex Portland cement mortar bond coat over tile backer board over Dow insulation board over 2x4 studs.
2. Ceiling construction: Same as walls, provide continuous sloped ceiling (½" per foot), and provide rounded inside corner tile at joint between wall and ceiling.
3. Insulate all walls, ceiling, and floor adjacent to steam shower.
4. Steam shower to be watertight, including a watertight shower door.
5. Steam Unit: "Mr. Steam model #MS-150, 6kw or approved equal. Provide the following connections: water inlet ⅜" NPT, steam outlet NPT, drain ⅜" NPT. Follow all manufacturer's specifications.

ROOFTOP-MOUNTED PHOTOVOLTAIC SYSTEMS

1. Structural support for all rooftop-mounted photovoltaic systems and other considerations shall comply with 2018 IRC Section R324.4

STATIONARY STORAGE BATTERY SYSTEMS

1. The installation of battery storage systems shall comply with 2018 IRC Section R327

FILE NAME:

REVIEWED
By Michael Kyne at 1:32 pm, May 23, 2022

APPROVED
Montgomery County
Historic Preservation Commission

GTM ARCHITECTS

7735 OLD GEORGETOWN ROAD
SUITE 700
BETHESDA, MD 20814
(240)333-2000
(240)333-2001 FAX
WWW.GTMARCHITECTS.COM

GTM

Seal

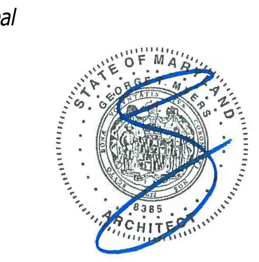

I certify that these documents were prepared or approved by me, and that I am a duly licensed architect under the laws of the State of Maryland, license number 8385, Expiration Date: 12-06-2022.

Consultant

Project
25 High Street LOT 1
25 HIGH STREET, BROOKEVILLE, MD 20833

Owner

Developer

Issue Description	Date
PERMIT SET	4-11-2022

GTM Project No.	18.0320
Checked By	GTM
Drawn By	NW/KF
Scale	AS NOTED

Sheet Title
SPECIFICATIONS

Sheet No.
002

COPYRIGHT, 2019 GTM ARCHITECTS, INC.

DOOR SCHEDULE

DOOR				FRAME					HARDWARE	REMARKS
NO.	SIZE	MATERIAL	MANUF.	MAT:	FIN:	HEAD	JAMB	SILL		
BASEMENT										
1	2'-6" x 6'-8"	SOLID CORE MASONITE	T.B.D						H-3	
2	2'-4" x 6'-8"	SOLID CORE MASONITE	T.B.D						H-4	
3	2'-4" x 6'-8"	SOLID CORE MASONITE	T.B.D.						H-3	
4	2'-6" x 6'-8"	SOLID CORE MASONITE	T.B.D						H-4	
5	3'-0" x 6'-8"	SOLID CORE MASONITE	T.B.D.						H-4	
6	2'-6" x 6'-8"	SOLID CORE MASONITE	T.B.D.						H-4	
FIRST FLOOR										
7	3'-0" x 8'-0"	WOOD & GLASS	T.B.D						H-2	PAINT GRADE W/ 18" TEMPERED SIDELIGHTS
8	2'-4" x 8'-0"	SOLID CORE MASONITE	T.B.D.						H-3	
9	2'-0" x 8'-0" 1 PAIR	SOLID CORE MASONITE	T.B.D.						H-5	
9A	2'-6" x 8'-0"	SOLID CORE MASONITE	T.B.D.						H-4	
10	3'-0" x 8'-0" 1 PAIR	WOOD & GLASS	JELDWEN						H-2	TEMPERED, WEATHERSTRIPPED FRENCH DOORS
11	2'-8" x 8'-0"	SOLID CORE MASONITE	T.B.D						H-4	
12	2'-0" x 8'-0" 1 PAIR	SOLID CORE MASONITE	T.B.D.						H-5	
13	2'-8" x 8'-0"	WOOD & GLASS	T.B.D						H-2	TEMPERED, WEATHERSTRIPPED FRENCH DOOR
SECOND FLOOR										
14	2'-6" x 7'-0"	SOLID CORE MASONITE	T.B.D.						H-3	
15	2'-4" x 7'-0"	SOLID CORE MASONITE	T.B.D.						H-4	
15A	2'-6" x 7'-0" 1 PAIR	SOLID CORE MASONITE	T.B.D.						H-5	
16	2'-6" x 7'-0"	SOLID CORE MASONITE	T.B.D.						H-3	
17	2'-4" x 7'-0" 1 PAIR	SOLID CORE MASONITE	T.B.D.						H-5	
18	2'-4" x 7'-0"	GLASS	T.B.D						H-3	
19	2'-4" x 7'-0" 1 PAIR	SOLID CORE MASONITE	T.B.D.						H-5	
20	2'-6" x 7'-0"	SOLID CORE MASONITE	T.B.D.						H-3	
21	2'-4" x 7'-0"	SOLID CORE MASONITE	T.B.D.						H-3	
22	2'-4" x 7'-0"	SOLID CORE MASONITE	T.B.D						H-6	POCKET DOOR
23	1'-4" x 7'-0"	SOLID CORE MASONITE	T.B.D.						H-4	
24	2'-4" x 7'-0"	SOLID CORE MASONITE	T.B.D						-	TEMPERED SHOWER DOOR
25	2'-4" x 7'-0"	SOLID CORE MASONITE	T.B.D.						H-3	
26	2'-6" x 7'-0"	SOLID CORE MASONITE	T.B.D.						H-6	POCKET DOOR
27	2'-4" x 7'-0"	SOLID CORE MASONITE	T.B.D						H-4	
28	2'-4" x 7'-0"	SOLID CORE MASONITE	T.B.D.						H-4	
29	2'-6" x 7'-0"	SOLID CORE MASONITE	T.B.D.						H-3	
30	2'-0" x 7'-0" 1 PAIR	SOLID CORE MASONITE	T.B.D.						H-5	
DETACHED GARAGE										
31	3'-0" x 7'-0"	WOOD/GLASS	T.B.D						H-3	PAINT GRADE
32	8'-0" x 7'-0"	WOOD/GLASS	T.B.D						-	
33	8'-0" x 7'-0"	WOOD/GLASS	T.B.D						-	

HARDWARE SCHEDULE

NOTE: ALL HARDWARE TO BE BY SCHLAGE OR APPROVED EQUAL. (EXCEPT FRENCH DOORS, WHICH ARE TO HAVE STANDARD HARDWARE BY DOOR MANUF.)

H-1	DOUBLE CYLINDER ENTRANCE LOCK, DEADBOLT
H-2	MULTI-POINT LEVER SET BY WINDOW/DOOR MANUF.
H-3	BATH/BEDROOM PRIVACY LOCK
H-4	PASSAGE SET
H-5	BALL CATCHES $ DUMMY KNOBS
H-6	POCKET DOOR HARDWARE
H-7	FRENCH DOOR PRIVACY LOCK-FLUSH BOLT/DUMMY HANDSET COMBO

GENERAL DOOR NOTES:

1. CONFIRM HARDWARE SELECTION WITH OWNER PRIOR TO ORDERING.
2. INTERIOR DOORS TO BE SOLID CORE.
3. DOORS W/ SIDELITES SHALL HAVE 2-2x6 SPACERS BETWEEN UNLESS SHOWN OTHERWISE
4. PROVIDE SAFETY GLASS AT ALL EXTERIOR FRENCH DOORS, PER CODE
5. PROVIDE CHARCOAL SCREENING @ SCREEN DOORS
6. CONNECT GARAGE DOOR TO ALARM SYSTEM PER OWNER

GENERAL NOTES

1. ALL WINDOWS TO HAVE SCREENS (SCREEN FRAMES COLOR T.B.S.).
2. ALL WINDOWS TO BE ALUMINUM CLAD EXTERIOR, PRE-PRIMED INTERIOR.
3. CONFIRM HARDWARE FINISH W/ ARCHITECT & OWNER PRIOR TO ORDER.
4. ALL GLAZING TO BE DOUBLE PANED, LOW E, CLEAR INSULATED.
5. CONFIRM OVERALL WINDOW SCHEDULE W/ ARCHITECT PRIOR TO ORDER.
6. ALL WINDOWS & GLASS DOORS TO BE SIMULATED DIVIDED LITE, 7/8" MUNTIN.. SEE ELEVATIONS FOR MUNTIN CONFIGURATIONS
7. PROVIDE WHITE JAMB LINERS.
8. ALL EXTERIOR TRIM FOR FRAME WALL UNITS TO BE AZEK PROVIDED & INSTALLED BY G.C.
9. GANGED WINDOWS SHALL 3-2x4 SPACERS BETWEEN UNLESS SHOWN OTHERWISE
10. PROVIDE EGRESS HARDWARE IN EGRESS WINDOWS AS REQUIRED.
11. SEE ELEVATIONS FOR TYPICAL HEAD HEIGHTS ABOVE FINISHED SUBFLOOR
12. PROVIDE SAFETY GLASS AT ENTRIES, STAIRS, OVER BATHTUBS & ELSEWHERE AS REQUIRED BY CODE.

WINDOW SCHEDULE (BASEMENT)

#	TYPE	MANUFACTURER	CAT. NO.	ROUGH OPNG.	GLASS	REMARKS	
001	DOUBLE HUNG	JELDWEN SITELINE	SCD3564	36 1/8" x 64 3/4"	INSULATED	SEE ELEVS. FOR GRILLE PATTERN	EGRESS UNIT

WINDOW SCHEDULE (FIRST FLOOR)

100	DOUBLE HUNG	JELDWEN SITELINE	SCD3564	36 1/8" x 64 3/4"	INSULATED	SEE ELEVS. FOR GRILLE PATTERN	
101	DOUBLE HUNG	JELDWEN SITELINE	SCD3564	36 1/8" x 64 3/4"	INSULATED	SEE ELEVS. FOR GRILLE PATTERN	
102	DOUBLE HUNG	JELDWEN SITELINE	SCD3564	36 1/8" x 64 3/4"	INSULATED	SEE ELEVS. FOR GRILLE PATTERN	
103	DOUBLE HUNG	JELDWEN SITELINE	SCD3564	36 1/8" x 64 3/4"	INSULATED	SEE ELEVS. FOR GRILLE PATTERN	
104	DOUBLE HUNG	JELDWEN SITELINE	SCD3564	36 1/8" x 64 3/4"	INSULATED	SEE ELEVS. FOR GRILLE PATTERN	
105	DOUBLE HUNG	JELDWEN SITELINE	SCD3564	36 1/8" x 64 3/4"	INSULATED	SEE ELEVS. FOR GRILLE PATTERN	
106	DOUBLE HUNG	JELDWEN SITELINE	SCD3564	36 1/8" x 64 3/4"	INSULATED	SEE ELEVS. FOR GRILLE PATTERN	
107	DOUBLE HUNG	JELDWEN SITELINE	SCD3364	34 1/8" x 68 3/4"	INSULATED	SEE ELEVS. FOR GRILLE PATTERN	
108	DOUBLE HUNG	JELDWEN SITELINE	SCD3364	34 1/8" x 68 3/4"	INSULATED	SEE ELEVS. FOR GRILLE PATTERN	
109	CASEMENT	JELDWEN SITELINE	SCC3630	36 3/4" x 30 3/4"	INSULATED	SEE ELEVS. FOR GRILLE PATTERN	
110	CASEMENT	JELDWEN SITELINE	SCC3630	36 3/4" x 30 3/4"	INSULATED	SEE ELEVS. FOR GRILLE PATTERN	
111	DOUBLE HUNG	JELDWEN SITELINE	SCD3364	34 1/8" x 64 3/4"	INSULATED	SEE ELEVS. FOR GRILLE PATTERN	
112	DOUBLE HUNG	JELDWEN SITELINE	SCD3364	34 1/8" x 64 3/4"	INSULATED	SEE ELEVS. FOR GRILLE PATTERN	
113	DOUBLE HUNG	JELDWEN SITELINE	SCD3364	34 1/8" x 64 3/4"	INSULATED	SEE ELEVS. FOR GRILLE PATTERN	
114	CASEMENT	JELDWEN SITELINE	(3) SCC2042	60 3/4" x 42 3/4"	INSULATED	SEE ELEVS. FOR GRILLE PATTERN	
115	←		NOT USED	→			
116	←		NOT USED	→			
117	DOUBLE HUNG	JELDWEN SITELINE	SCC3630	36 1/8" x 64 3/4"	INSULATED	SEE ELEVS. FOR GRILLE PATTERN	
118	DOUBLE HUNG	JELDWEN SITELINE	SCC3630	36 1/8" x 64 3/4"	INSULATED	SEE ELEVS. FOR GRILLE PATTERN	

WINDOW SCHEDULE (SECOND FLOOR)

200	CASEMENT	JELDWEN SITELINE	SCC3048	30 3/4" x 48 3/4"	INSULATED	SEE ELEVS. FOR GRILLE PATTERN	EGRESS UNIT
201	CASEMENT	JELDWEN SITELINE	SCC3048	30 3/4" x 48 3/4"	INSULATED	SEE ELEVS. FOR GRILLE PATTERN	EGRESS UNIT
202	CASEMENT	JELDWEN SITELINE	SCC3048	32 3/4" x 48 3/4"	INSULATED	SEE ELEVS. FOR GRILLE PATTERN	EGRESS UNIT
203	CASEMENT	JELDWEN SITELINE	SCC3048	32 3/4" x 48 3/4"	INSULATED	SEE ELEVS. FOR GRILLE PATTERN	EGRESS UNIT
204	CASEMENT	JELDWEN SITELINE	SCC3048	32 3/4" x 48 3/4"	INSULATED	SEE ELEVS. FOR GRILLE PATTERN	EGRESS UNIT
205	CASEMENT	JELDWEN SITELINE	SCC3630	36 3/4" x 30 3/4"	INSULATED	SEE ELEVS. FOR GRILLE PATTERN	
206	CASEMENT	JELDWEN SITELINE	SCC3054	30 3/4" x 54 3/4"	INSULATED	SEE ELEVS. FOR GRILLE PATTERN	
207	CASEMENT	JELDWEN SITELINE	SCC3054	30 3/4" x 54 3/4"	INSULATED	SEE ELEVS. FOR GRILLE PATTERN	
208	CASEMENT	JELDWEN SITELINE	SCC3054	30 3/4" x 54 3/4"	INSULATED	SEE ELEVS. FOR GRILLE PATTERN	TEMPERED UNIT
209	CASEMENT	JELDWEN SITELINE	SCC3054	30 3/4" x 54 3/4"	INSULATED	SEE ELEVS. FOR GRILLE PATTERN	TEMPERED UNIT
210	CASEMENT	JELDWEN SITELINE	SCC3054	30 3/4" x 54 3/4"	INSULATED	SEE ELEVS. FOR GRILLE PATTERN	EGRESS UNIT
211	CASEMENT	JELDWEN SITELINE	SCC3054	30 3/4" x 54 3/4"	INSULATED	SEE ELEVS. FOR GRILLE PATTERN	EGRESS UNIT
212	CASEMENT	JELDWEN SITELINE	SCC3054	30 3/4" x 54 3/4"	INSULATED	SEE ELEVS. FOR GRILLE PATTERN	TEMPERED UNIT
213	CASEMENT	JELDWEN SITELINE	SCC3654	36 3/4" x 54 3/4"	INSULATED	SEE ELEVS. FOR GRILLE PATTERN	EGRESS UNIT
214	CASEMENT	JELDWEN SITELINE	SCC3648	36 3/4" x 42 3/4"	INSULATED	SEE ELEVS. FOR GRILLE PATTERN	EGRESS UNIT

WINDOW SCHEDULE (DETACHED GARAGE)

300	CASEMENT	JELDWEN SITELINE	SCC2424	24 3/4" x 24 3/4"	INSULATED	SEE ELEVS. FOR GRILLE PATTERN	
301	DOUBLE HUNG	JELDWEN SITELINE	SCC3654	36 3/4" x 54 3/4"	INSULATED	SEE ELEVS. FOR GRILLE PATTERN	
302	DOUBLE HUNG	JELDWEN SITELINE	SCC3654	36 3/4" x 54 3/4"	INSULATED	SEE ELEVS. FOR GRILLE PATTERN	
303	DOUBLE HUNG	JELDWEN SITELINE	SCC3654	36 3/4" x 54 3/4"	INSULATED	SEE ELEVS. FOR GRILLE PATTERN	
304	CASEMENT	JELDWEN SITELINE	SCC2424	24 3/4" x 24 3/4"	INSULATED	SEE ELEVS. FOR GRILLE PATTERN	
305	DOUBLE HUNG	JELDWEN SITELINE	SCC3654	36 3/4" x 54 3/4"	INSULATED	SEE ELEVS. FOR GRILLE PATTERN	

REVIEWED
By Michael Kyne at 1:32 pm, May 23, 2022

APPROVED
Montgomery County
Historic Preservation Commission

GTM ARCHITECTS

7735 OLD GEORGETOWN ROAD
SUITE 700
BETHESDA, MD 20814
(240)333-2000
(240)333-2001 FAX
WWW.GTMARCHITECTS.COM

Seal

I certify that these documents were prepared or approved by me, and that I am a duly licensed architect under the laws of the State of Maryland, license number 8886, Expiration Date: 12/06/2022

Consultant

Project
25 High Street
LOT 1
25 HIGH STREET, BROOKEVILLE, MD 20833

Owner

Developer

PERMIT SET	4-11-2022
Issue Description	Date

GTM Project No.	18.0320
Checked By	GTM
Drawn By	NW/KF
Scale	AS NOTED

Sheet Title
DOOR & WINDOW SCHEDULES

Sheet No.
003

COPYRIGHT, 2019 GTM ARCHITECTS, INC.

FILE NAME:

GENERAL NOTES

1. Boundary information and two-foot contour data within noted "Limits of Topographic Survey" are based upon surveys performed by CAS Engineering, dated July, 2018.
2. The location of offsite trees, improvements and other structures beyond noted "Limits of Topographic Survey" are approximate. Offsite features are shown per available MNCPPC topographic records and are provided for illustrative purposes only.
3. Total lot area: Lot 1 =15,000 sq. ft. (0.344 ac.)
4. Property is located on Tax Map HU562 and WSSC 200' Sheet 227NW03.
5. Property is located on Montgomery County soils survey map number 14. Soil type(s): 1B, 1C, 6A & 16D. [Gaila silt loam, Baile silt loam & Brinklow-Blocktown channery silt loams] Hydrologic Soil Group "B" "C" & "D".
6. Flood zone "X" per F.E.M.A. Firm Maps, Community Panel Number 24031C0216D.
7. Property is located in the Hawlings River - Reddy Branch Watershed.
8. Water Category - 3, Sewer Category - 3
9. Local utilities include:
   Water / Sewer - Washington Suburban Sanitary Commission
   Electric - PEPCO
   Telephone - Verizon
   Gas - Washington Gas
10. Parcel 770 is located in the Town of Brookeville and the Brookeville Historic District.
11. This plan was created without the benefit of a title report.

TOWN OF BROOKEVILLE ZONING DATA

1. Zoning: Historic Village Residential (HVR)

Minimum Lot Area = 10,000 sq. ft.	Front B.R.L. = 15 ft.
Minimum Lot Width at R/W = 25 ft.	Rear B.R.L. = 40 ft. / 2 ft. (Accessory Structures)
Minimum Lot Width at B.R.L. = N/A	Side B.R.L. = 8 ft. / 2 ft. (Accessory Structures)

2. Verify main building height in accordance with the Town of Brookeville Zoning Ordinance.

Height of building from FF to highest point:	24.88 ft (24'-10 1/2" Per Arch.)
First floor elevation	447.80 ft
Height of building to highest point	24.88 ft
Elevation @ highest point	472.68 ft
Average elevation along front of building	444.70 ft

Height of building at highest point = 472.68 - 444.70 = 27.98 feet
Allowable height of building = 35 feet

Proposed height of building to highest point = 27.98 feet

3. Verify accessory building height in accordance with the Town of Brookeville Zoning Ordinance.

Height of building from FF to highest point:	17.29 ft (17'-3 1/2" Per Arch.)
First floor elevation	444.50 ft
Height of accessory building to highest point	17.29 ft
Elevation @ highest point	461.79 ft
Average elevation along front of building	444.10 ft

Height of accessory building at highest point = 461.79 - 444.10 = 17.69 feet
Allowable height of accessory building = 35 feet

Proposed height of accessory building to highest point = 17.69 feet

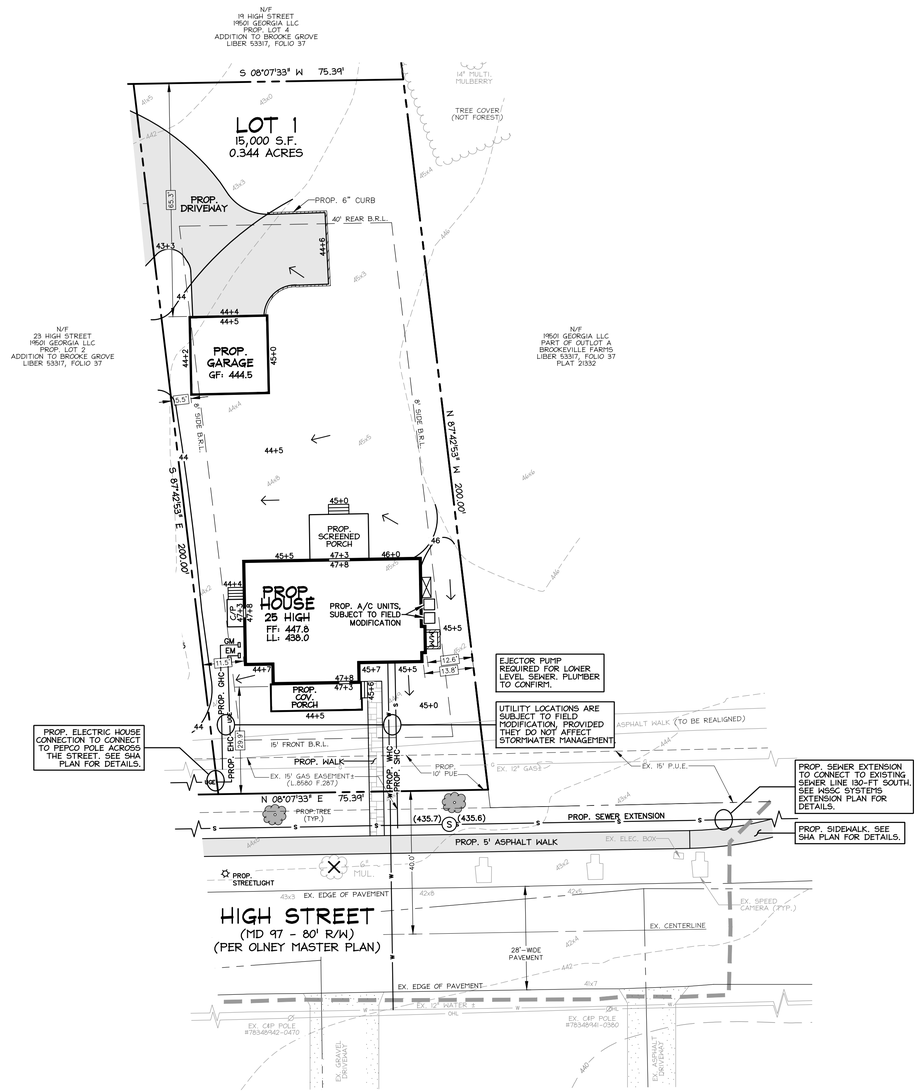

LEGEND

EXISTING FEATURES

- Ex. Sewer Manhole and Invert
- Ex. Water Line with Valve
- Ex. Gas Line with Valve
- Ex. Overhead Utility with Pole
- Ex. Two- And Ten-foot Contours
- Ex. Spot Elevation
- Ex. Canopy Line
- Ex. Tree
- Ex. Specimen Tree (DBH ≥ 30")
- Ex. Significant Tree (DBH ≥ 24")
- Ex. Tree (To Be Removed)

PROPOSED FEATURES

- Prop. Water-House Connection
- Prop. Sewer-House Connection
- Prop. Gas-House Connection
- Prop. Electric-House Connection
- Prop. Contour with Elevation
- Prop. Spot Elevation
- Prop. Surface Flow Direction
- Prop. Tree
- Prop. Streetlight

AVERAGE GRADE (ACCESSORY BUILDING)

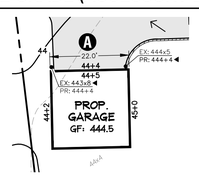

	ELEV @ POINT 1	ELEV @ POINT 2	AVERAGE GRADE	SECTION LENGTH	% LENGTH	AVERAGE GRADE x % LENGTH
Section A	443.80	444.40	444.10	22.1	100.00%	444.10

AVERAGE GRADE = 444.10

AVERAGE GRADE (MAIN BUILDING)

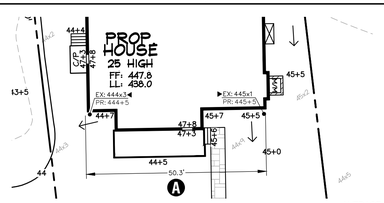

	ELEV @ POINT 1	ELEV @ POINT 2	AVERAGE GRADE	SECTION LENGTH	% LENGTH	AVERAGE GRADE x % LENGTH
Section A	444.30	445.10	344.70	50.3	100.00%	444.70

AVERAGE GRADE = 444.70

UTILITY INFORMATION

EXISTING UNDERGROUND UTILITY LOCATIONS ARE APPROXIMATE AND MUST BE FIELD VERIFIED. UTILITY LOCATIONS ARE BASED UPON AVAILABLE RECORDS AND ARE SHOWN TO THE BEST OF OUR ABILITY.

FOR LOCATION OF UTILITIES, CALL "MISS UTILITY" AT 1-800-257-7777, OR LOG ON TO WWW.MISSUTILITY.NET/UTIC 48 HOURS IN ADVANCE OF ANY WORK IN THIS VICINITY. THE EXCAVATOR MUST NOTIFY ALL PUBLIC UTILITY COMPANIES WITH UNDER GROUND FACILITIES IN THE AREA OF PROPOSED EXCAVATION AND HAVE THOSE FACILITIES LOCATED BY THE UTILITY COMPANIES PRIOR TO COMMENCING EXCAVATION. THE EXCAVATOR IS RESPONSIBLE FOR COMPLIANCE WITH REQUIREMENTS OF CHAPTER 36A OF THE MONTGOMERY COUNTY CODE.

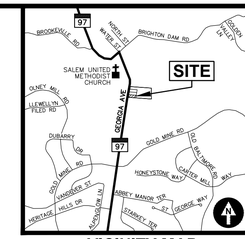

VICINITY MAP

ADC MAP 5050, GRID A-3, SCALE: 1" = 2000'

CAS JOB NO.:	16-579B
DATE:	03/2022

DATE	REVISION
03/31/22	SMF: Building Permit Site Plan to Arch for coordination.

REVIEWED
By Michael Kyne at 1:32 pm, May 23, 2022

APPROVED
Montgomery County
Historic Preservation Commission

Lot 1, Addition to Brooke Grove
Plat Pending
Olney (8th) Election District, Montgomery County, MD

25 High Street
Brookeville, Maryland 20833

CAS ENGINEERING-MD
10 South Bentz Street
Frederick, Maryland 21701
301-607-8031 Phone
info@casengineering.com
www.casengineering.com

CAS ENGINEERING-DC, LLC
4836 MacArthur Boulevard, NW, 2nd Floor
Washington, DC 20007
202-393-7200 Phone
info@cas-dc.com
www.cas-dc.com

0 10 20 30 40
SCALE: 1 INCH = 20 FEET

SHEET TITLE:

Building Permit Site Plan

CLIENT
Phillip E. Sardelis
10776 Ticker Street
Beltsville, MD 20705
philsardelis@gmail.com

ARCHITECT
GTM Architects
Attn: Luke Olson
7735 Old Georgetown Road, Suite 700
Bethesda, MD 20814
(240) 333-2021 Phone
lolson@gtmarchitects.com

THIS PLAN IS FOR BUILDING PERMIT APPROVAL ONLY.
SEE THE SHA DISTRICT OFFICE PERMIT PLAN FOR ADDITIONAL DETAILS.
SEE THE APPROVED SEDIMENT CONTROL PLAN FOR REQUIRED SEDIMENT CONTROL AND STORMWATER MANAGEMENT MEASURES.

25 High Street
Lot 1
Addition to Brooke Grove
Building Permit Site Plan

P:\2016\16579B__23 High Street_Parcel 770\6 drawings\16579_BPSP_SCP_SWM.dwg, 3/31/2022 10:45:58 AM, smf, © 2022 CAS Engineering and CAS Engineering-DC, LLC

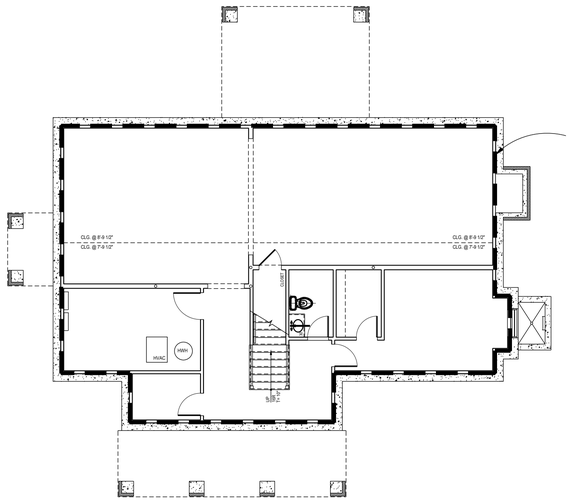

1 BASEMENT THERMAL ENVELOPE PLAN
SCALE: 1/8"=1'=0

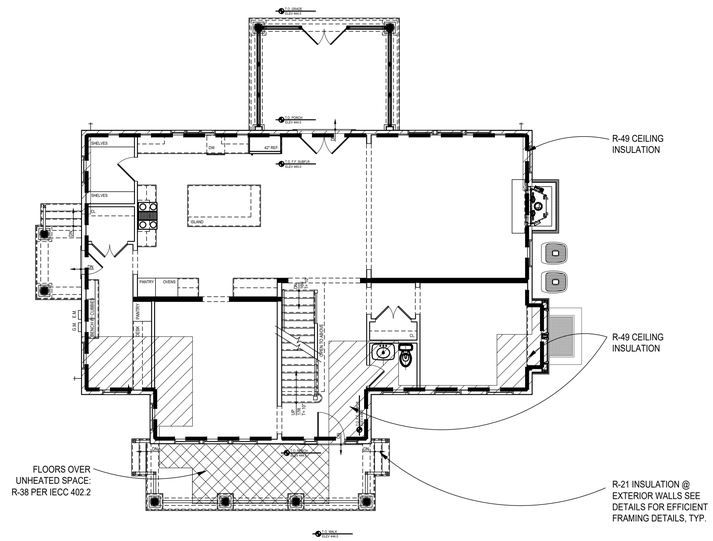

2 FIRST FLOOR THERMAL ENVELOPE PLAN
SCALE: 1/8"=1'=0

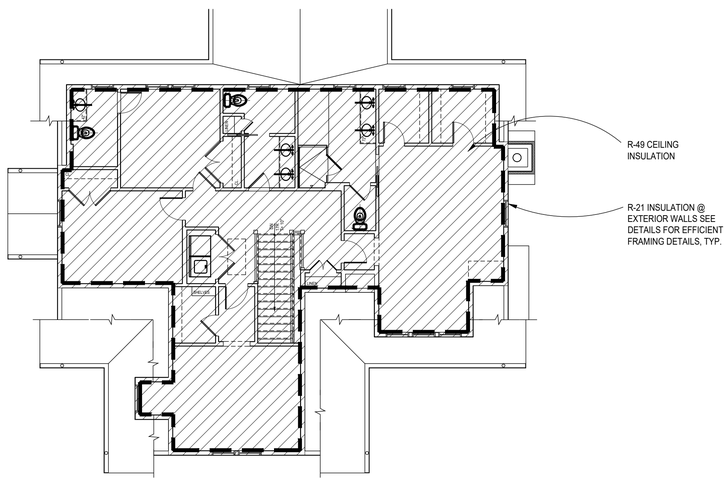

3 SECOND FLOOR THERMAL ENVELOPE PLAN
SCALE: 1/8"=1'=0

WINDOW/DOORS THERMAL DATA

THERMAL PERFORMACE DATA FOR DOORS & WINDOWS		
OPENING TYPE	U-VALUE	SHGC
CASEMENT WINDOWS	0.35	0.40
DOUBLE HUNG WINDOWS	0.35	0.40
FRENCH INSWINGING/ SLIDING DOORS	0.35	0.40
EXTERIOR SWINGING DOORS	0.35	0.40

THE AREA-WEIGHTED AVERAGE MAXIMUM FENESTRATION U-FACTOR PERMITTED USING TRADE-OFFS FROM SECTION 402.1 IN ZONE 4 SHALL BE .35 FOR VERTICAL FENESTRATION AND .55 FOR SKYLITES

ENERGY CONSERVATION NOTES

1. The following provisions for thermal resistance meet or exceed the requirements stipulated by the International Energy Conservation Code.
2. INSULATION: IRC

CEILING (OF UPPERMOST STORY)	R-49 W/ 500SF R-30 ALLOWANCE, OR R-38 CONTINUOUS
VAULTED CEILING	R-38
EXTERIOR FRAME WALLS	R-20 OR 13+5 (EXTERIOR)
RIM JOISTS	EQUAL TO WALL BELOW
FLOORS OVER UNHEATED SPACES (INCLUDING FLOOR OVERHANGS)	R-38
MASONRY WALLS (ENCLOSED HEATED LIVING AREAS)	R-13 OR R-10 CONTINUOUS
SLAB ON GRADE (HEATED SPACE)	
24" PERIMETER INSULATION	R-10
WINDOWS	0.32 U FACTOR, 0.40 SHGC
DOORS	SEE SECTION R402.3.4

*ALL VALUES ARE TYPICAL UNLESS NOTED OTHERWISE IN ARCHITECTURAL DRAWINGS

3. Air Infiltration:
A. Windows: not exceeding five tenths (0.5) CFM of sash crack.
B. Sliding Glass Doors: not exceeding five tenths (0.5) CFM per foot of door area.
C. Swinging Doors: not exceeding one and twenty-five hundredths (1.25) CFM per square foot of door area.
Provide 1" fiberglass sill sealer between foundation wall and all sill plates.
D. In order to seal between dissimilar materials to allow for differential expansion and contraction, the following shall be caulked, gasketed, weatherstripped or otherwise sealed with an air barrier material, suitable film or solid material:

1. All joints, seams, and penetrations
2. Site-built windows, doors, and skylites
3. Openings between window and door assemblies and their respective jambs & framing
4. Utility penetrations
5. Dropped ceilings or chases adjacent to the thermal envelope
6. Knee walls
7. Walls and ceilings separating a garage from conditioned spaces
8. Behind tubs and showers on exterior walls
9. Common walls between dwelling units
10. Attic access openings
11. Rim joist junction
12. Other sources of infiltration

HVAC SYSTEMS & WATER HEATING

1. HEATING & COOLING EQUIP. CONTROLS. AT LEAST ONE PRE-PROGRAMMED PROGRAMMABLE THERMOSTAT IS REQUIRED WHEN USING A FORCED AIR SYSTEM. SEPARATE THERMOSTATS ARE REQUIRED FOR EACH HEATING/COOLING ZONE IN THE DWELLING.

2. DUCT INSULATION. SUPPLY DUCTS LOCATED OUTSIDE THE BUILDING THERMAL ENVELOPE SHALL BE INSULATED TO MINIMUM R-8; ALL OTHER DUCTS INSULATED TO A MINIMUM OF R-6

3. DUCT SEALING. ALL DUCTS, AIR HANDLERS, FILTER BOXES, & BUILDING CAVITIES MUST BE SEALED. JOINTS & SEAMS SHALL COMPLY W/ M1606.4.1 IRC

4. MECHANICAL SYSTEM PIPING INSULATION. R-3 FOR PIPING CARRYING FLUIDS AT >105°F OR <55°F IS REQUIRED

5. MECHANICAL VENTILATION. OUTDOOR AIR INTAKES OR EXHAUSTS SHALL HAVE DAMPERS

6. SERVICE WATER HEATING. PIPING IN THE CIRCULATING HOT WATER SYSTEM SHALL BE INSULATED TO AN R-3 AND SYSTEM TO INCLUDE MANUAL OR AUTOMATIC SWITCH THAT CAN TURN OFF THE SYSTEM WHEN IT IS NOT USED. WATER HEATERS WITH PIPE RISERS SHALL HAVE HEAT TRAPS ON BOTH INLET AND OUTLET OF WATER HEATER UNLESS THE WATER HEATER HAS INTEGRAL HEAT TRAPS OR IS PART OF A CIRCULATION SYSTEM. TYPICAL METHODS USED FOR CREATING HEAT TRAPS ARE "U" OR "RAMS HORN" BENDS IN THE FLEXIBLE PIPE CONNECTORS OR INSTALLING AFTERMARKET PIPE NIPPLES WITH INTEGRAL TRAPS.

7. EQUIPMENT SIZING. HEATING AND COOLING EQUIPMENT SHALL BE SIZED BASED ON BUILDING LOADS CALCULATED IN ACCORDANCE WITH ACCA (AIR CONDITIONING CONTRACTORS OF AMERICA) MANUAL-J, A SIMPLIFIED METHOD OF CALCULATING HEATING AND COOLING LOADS. THE MANUAL-J CALCULATIONS SHALL BE SUBMITTED UPON APPLICATION FOR THE MECHANICAL PERMIT.

SECTION 302.1 OF IECC SPECIFIES THE INTERIOR DESIGN TEMPERATURES USED FOR HEATING AND COOLING LOAD CALCULATIONS AS MAXIMUM OF 72°F FOR HEATINGAND MINIMUM 75°F FOR COOLING.

LEGEND

INSULATION PERIMETER

AREA OF INSULATION ABOVE OR BELOW AS INDICATED

REVIEWED
By Michael Kyne at 1:32 pm, May 23, 2022

APPROVED
Montgomery County
Historic Preservation Commission

GTM ARCHITECTS

7735 OLD GEORGETOWN ROAD
SUITE 700
BETHESDA, MD 20814
(240)333-2000
(240)333-2001 FAX
WWW.GTMARCHITECTS.COM

Seal

I certify that these documents were prepared or approved by me, and that I am a duly licensed architect under the laws of the State of Maryland, license number 5585, Expiration Date: 12/06/2022.

Consultant

Project
25 High Street
LOT 1
25 HIGH STREET, BROOKEVILLE, MD 20833

Owner

Developer

PERMIT SET	4-11-2022
Issue Description	*Date*

GTM Project No.	18.0320
Checked By	GTM
Drawn By	NW/KF
Scale	AS NOTED

Sheet Title
THERMAL ENVELOPE DIAGRAMS

Sheet No.
EC001

COPYRIGHT, 2019 GTM ARCHITECTS, INC.

FILE NAME:

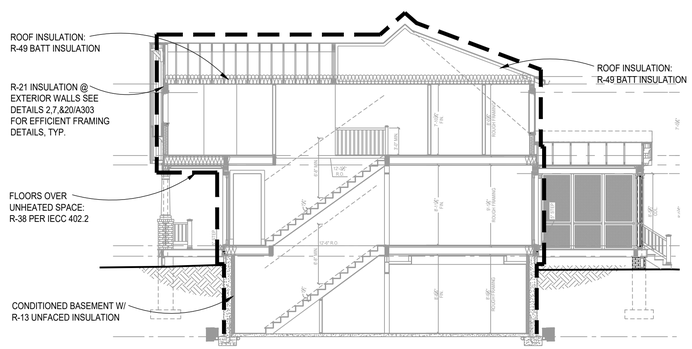

1 TYPICAL THERMAL ENVELOPE BUILDING SECTION

SCALE: 1/8"=1'=0

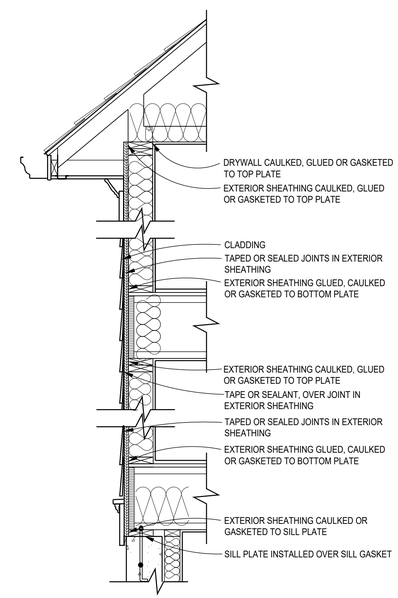

2 ENVELOPE AIR SEALING DETAIL

SCALE: 3/4"=1'-0"

*95 TOTAL SQ. FT. OF PROPOSED
R-38 CEILING/ATTIC INSULATION

500 SQ. FT ALLOWED PER IECC 402.2

WINDOW/DOORS THERMAL DATA

THERMAL PERFORMACE DATA FOR DOORS & WINDOWS

OPENING TYPE	U-VALUE	SHGC
CASEMENT WINDOWS	0.35	0.40
DOUBLE HUNG WINDOWS	0.35	0.40
FRENCH INSWINGING/ SLIDING DOORS	0.35	0.40
EXTERIOR SWINGING DOORS	0.35	0.40

THE AREA-WEIGHTED AVERAGE MAXIMUM FENESTRATION U-FACTOR PERMITTED USING TRADE-OFFS FROM SECTION 402.1 IN ZONE 4 SHALL BE .35 FOR VERTICAL FENESTRATION AND .55 FOR SKYLITES

ENERGY CONSERVATION NOTES

1. The following provisions for thermal resistance meet or exceed the requirements stipulated by the International Energy Conservation Code.
2. INSULATION: IRC

CEILING (OF UPPERMOST STORY)	R-49 W/ 500SF R-30 ALLOWANCE, OR R-38 CONTINUOUS
VAULTED CEILING	R-38
EXTERIOR FRAME WALLS	R-20 OR 13+5 (EXTERIOR)
RIM JOISTS	EQUAL TO WALL BELOW
FLOORS OVER UNHEATED SPACES (INCLUDING FLOOR OVERHANGS)	R-38
MASONRY WALLS (ENCLOSED HEATED LIVING AREAS)	R-13 OR R-10 CONTINUOUS
SLAB ON GRADE (HEATED SPACE) 24" PERIMETER INSULATION	R-10
WINDOWS	0.35 U FACTOR, 0.40 SHGC
DOORS	SEE SECTION R402.3.4

*ALL VALUES ARE TYPICAL UNLESS NOTED OTHERWISE IN ARCHITECTURAL DRAWINGS

3. Air Infiltration:
A. Windows: not exceeding five tenths (0.5) CFM of sash crack.
B. Sliding Glass Doors: not exceeding five tenths (0.5) CFM per foot of door area.
C. Swinging Doors: not exceeding one and twenty-five hundredths (1.25) CFM per square foot of door area. Provide 1" fiberglass sill sealer between foundation wall and all sill plates.
D. In order to seal between dissimilar materials to allow for differential expansion and contraction, the following shall be caulked, gasketed, weatherstripped or otherwise sealed with an air barrier material, suitable film or solid material:

1. All joints, seams, and penetrations
2. Site-built windows, doors, and skylites
3. Openings between window and door assemblies and their respective jambs & framing
4. Utility penetrations
5. Dropped ceilings or chases adjacent to the thermal envelope
6. Knee walls
7. Walls and ceilings separating a garage from conditioned spaces
8. Behind tubs and showers on exterior walls
9. Common walls between dwelling units
10. Attic access openings
11. Rim joist junction
12. Other sources of infiltration

HVAC SYSTEMS & WATER HEATING

1. HEATING & COOLING EQUIP. CONTROLS. AT LEAST ONE PRE-PROGRAMMED PROGRAMMABLE THERMOSTAT IS REQUIRED WHEN USING A FORCED AIR SYSTEM. SEPARATE THERMOSTATS ARE REQUIRED FOR EACH HEATING/COOLING ZONE IN THE DWELLING.

2. DUCT INSULATION. SUPPLY DUCTS LOCATED OUTSIDE THE BUILDING THERMAL ENVELOPE SHALL BE INSULATED TO MINIMUM R-8; ALL OTHER DUCTS INSULATED TO A MINIMUM OF R-6

3. DUCT SEALING. ALL DUCTS, AIR HANDLERS, FILTER BOXES, & BUILDING CAVITIES MUST BE SEALED. JOINTS & SEAMS SHALL COMPLY W/ M1606.4.1 IRC

4. MECHANICAL SYSTEM PIPING INSULATION. R-3 FOR PIPING CARRYING FLUIDS AT >105°F OR <55°F IS REQUIRED

5. MECHANICAL VENTILATION. OUTDOOR AIR INTAKES OR EXHAUSTS SHALL HAVE DAMPERS

6. SERVICE WATER HEATING. PIPING IN THE CIRCULATING HOT WALTER SYSTEM SHALL BE INSULATED TO AN R-3 AND SYSTEM TO INCLUDE MANUAL OR AUTOMATIC SWITCH THAT CAN TURN OFF THE SYSTEM WHEN IT IS NOT USED, WATER HEATERS WITH PIPE RISERS SHALL HAVE HEAT TRAPS ON BOTH INLET AND OUTLET OF WATER HEATER UNLESS THE WATER HEATER HAS INTEGRAL HEAT TRAPS OR IS PART OF A CIRCULATION SYSTEM. TYPICAL METHODS USED FOR CREATING HEAT TRAPS ARE "U" OR "RAMS HORN" BENDS IN THE FLEXIBLE PIPE CONNECTORS OR INSTALLING AFTERMARKET PIPE NIPPLES WITH INTEGRAL TRAPS.

7. EQUIPMENT SIZING. HEATING AND COOLING EQUIPMENT SHALL BE SIZED BASED ON BUILDING LOADS CALCULATED IN ACCORDANCE WITH ACCA (AIR CONDITIONING CONTRACTORS OF AMERICA) MANUAL-J, A SIMPLIFIED METHOD OF CALCULATING HEATING AND COOLING LOADS. THE MANUAL-J CALCULATIONS SHALL BE SUBMITTED UPON APPLICATION FOR THE MECHANICAL PERMIT.

SECTION 302.1 OF IECC SPECIFIES THE INTERIOR DESIGN TEMPERATURES USED FOR HEATING AND COOLING LOAD CALCULATIONS AS MAXIMUM OF 72°F FOR HEATINGAND MINIMUM 75°F FOR COOLING.

LEGEND

INSULATION PERIMETER

AREA OF INSULATION ABOVE OR BELOW AS INDICATED

REVIEWED
By Michael Kyne at 1:32 pm, May 23, 2022

APPROVED
Montgomery County
Historic Preservation Commission

GTM ARCHITECTS

7735 OLD GEORGETOWN ROAD
SUITE 700
BETHESDA, MD 20814
(240)333-2000
(240)333-2001 FAX
WWW.GTMARCHITECTS.COM

Seal

STATE OF MARYLAND
NICHOLAS WOLF
ARCHITECT

I certify that these documents were prepared or approved by me, and that I am a duly licensed architect under the laws of the State of Maryland, license number 5080, Expiration Date: 12/06/2022.

Consultant

Project

25 High Street
LOT 1

25 HIGH STREET, BROOKEVILLE, MD 20833

Owner

Developer

PERMIT SET	4-11-2022
Issue Description	*Date*

GTM Project No.	18.0320
Checked By	GTM
Drawn By	NW/KF
Scale	AS NOTED

Sheet Title

THERMAL ENVELOPE DIAGRAMS

Sheet No.

EC002

COPYRIGHT, 2019 GTM ARCHITECTS, INC.

FILE NAME:

5 | 4 | 3 | 2 | 1

D

REVIEWED
By Michael Kyne at 1:32 pm, May 23, 2022

APPROVED
Montgomery County
Historic Preservation Commission

GTM ARCHITECTS

7735 OLD GEORGETOWN ROAD
SUITE 700
BETHESDA, MD 20814
(240)333-2000
(240)333-2001 FAX
WWW.GTMARCHITECTS.COM

GTM

Seal

I certify that these documents were prepared or approved by me, and that I am a duly licensed architect under the laws of the State of Maryland, license number 8385, Expiration Date: 12-06-2022.

Consultant

Generated by RES*check-Web* Software

Compliance Certificate

Project PARCEL 770 - LOT B

Energy Code:	**2018 IECC**
Location:	**Prince George's County, Maryland**
Construction Type:	**Single-family**
Project Type:	**New Construction**
Conditioned Floor Area:	**5,248 ft2**
Glazing Area	**27%**
Climate Zone:	**4 (4999 HDD)**
Permit Date:	
Permit Number:	

Construction Site:
Owner/Agent: Maryland
Designer/Contractor: Maryland

Compliance: Passes using UA trade-off

Compliance: **5.6% Better Than Code** Maximum UA: **552** Your UA: **521** Maximum SHGC: **0.40** Your SHGC: **0.24**

The % Better or Worse Than Code Index reflects how close to compliance the house is based on code trade-off rules.
It DOES NOT provide an estimate of energy use or cost relative to a minimum-code home.

Slab-on-grade tradeoffs are no longer considered in the UA or performance compliance path in REScheck. Each slab-on-grade assembly in the specified climate zone must meet the minimum energy code insulation R-value and depth requirements.

Envelope Assemblies

Assembly	Gross Area or Perimeter	Cavity R-Value	Cont. R-Value	Prop. U-Factor	Req. U-Factor	Prop. UA	Req. UA
Floor over unheated space: Flat Ceiling or Scissor Truss	30	38.0	0.0	0.030	0.026	1	1
Eaves: Flat Ceiling or Scissor Truss	138	38.0	0.0	0.030	0.026	4	4
Ceiling: Raised or Energy Truss	1,549	49.0	0.0	0.020	0.026	31	40
Wall: Wood Frame, 16" o.c.	2,936	21.0	0.0	0.057	0.060	120	126
Door Copy: Solid Door (under 50% glazing)	49			0.270	0.320	13	16
Door: Glass Door (over 50% glazing) SHGC: 0.25	96			0.300	0.320	29	31
Windows Dbl Hung: Wood Frame SHGC: 0.24	644			0.300	0.320	193	206
Windows Casement: Wood Frame SHGC: 0.23	48			0.280	0.320	13	15
Basement Wall: Solid Concrete or Masonry Wall height: 8.8' Depth below grade: 7.0' Insulation depth: 8.8'	1,860	13.0	0.0	0.061	0.059	113	109
Window: Wood Frame SHGC: 0.24	14			0.300	0.320	4	4

Compliance Statement: The proposed building design described here is consistent with the building plans, specifications, and other calculations submitted with the permit application. The proposed building has been designed to meet the 2018 IECC requirements in RES*check* Version : REScheck-Web and to comply with the mandatory requirements listed in the RES*check* Inspection Checklist.

Name - Title ____ Signature ____ Date ____

RES*check* Software Version : REScheck-Web

Inspection Checklist

Energy Code: 2018 IECC

Requirements: 0.0% were addressed directly in the RES*check* software

Text in the "Comments/Assumptions" column is provided by the user in the REScheck Requirements screen. For each requirement, the user certifies that a code requirement will be met and how that is documented, or that an exception is being claimed. Where compliance is itemized in a separate table, a reference to that table is provided.

Section # & Req.ID	Pre-Inspection/Plan Review	Plans Verified Value	Field Verified Value	Complies?	Comments/Assumptions
103.1, 103.2 [PR1][1]	Construction drawings and documentation demonstrate energy code compliance for the building envelope. Thermal envelope represented on construction documents.			☐Complies ☐Does Not ☐Not Observable ☐Not Applicable	
103.1, 103.2, 403.7 [PR3][1]	Construction drawings and documentation demonstrate energy code compliance for lighting and mechanical systems. Systems serving multiple dwelling units must demonstrate compliance with the IECC Commercial Provisions.			☐Complies ☐Does Not ☐Not Observable ☐Not Applicable	
302.1, 403.7 [PR2][2]	Heating and cooling equipment is sized per ACCA Manual S based on loads calculated per ACCA Manual J or other methods approved by the code official.	Heating: Btu/hr_____ Cooling: Btu/hr_____	Heating: Btu/hr_____ Cooling: Btu/hr_____	☐Complies ☐Does Not ☐Not Observable ☐Not Applicable	

Additional Comments/Assumptions:

1 High Impact (Tier 1) 2 Medium Impact (Tier 2) 3 Low Impact (Tier 3)

Section # & Req.ID	Foundation Inspection	Plans Verified Value	Field Verified Value	Complies?	Comments/Assumptions
402.1.1 [FO4][1]	Conditioned basement wall insulation R-value. Where interior insulation is used, verification may need to occur during Insulation Inspection. Not required in warm-humid locations in Climate Zone 3.	R-_____ R-_____	R-_____ R-_____	☐Complies ☐Does Not ☐Not Observable ☐Not Applicable	*See the Envelope Assemblies table for values.*
303.2 [FO5][1]	Conditioned basement wall insulation installed per manufacturer's instructions.			☐Complies ☐Does Not ☐Not Observable ☐Not Applicable	
402.2.9 [FO6][1]	Conditioned basement wall insulation depth of burial or distance from top of wall.	_____ ft	_____ ft	☐Complies ☐Does Not ☐Not Observable ☐Not Applicable	*See the Envelope Assemblies table for values.*
303.2.1 [FO11][2]	A protective covering is installed to protect exposed exterior insulation and extends a minimum of 6 in. below grade.			☐Complies ☐Does Not ☐Not Observable ☐Not Applicable	
403.9 [FO12][2]	Snow- and ice-melting system controls installed.			☐Complies ☐Does Not ☐Not Observable ☐Not Applicable	

Additional Comments/Assumptions:

1 High Impact (Tier 1) 2 Medium Impact (Tier 2) 3 Low Impact (Tier 3)

Section # & Req.ID	Framing / Rough-In Inspection	Plans Verified Value	Field Verified Value	Complies?	Comments/Assumptions
402.1.1, 402.3.4 [FR1][1]	Door U-factor.	U-_____	U-_____	☐Complies ☐Does Not ☐Not Observable ☐Not Applicable	*See the Envelope Assemblies table for values.*
402.1.1, 402.3.1, 402.3.3, 402.5 [FR2][1]	Glazing U-factor (area-weighted average).	U-_____	U-_____	☐Complies ☐Does Not ☐Not Observable ☐Not Applicable	*See the Envelope Assemblies table for values.*
303.1.3 [FR4][1]	U-factors of fenestration products are determined in accordance with the NFRC test procedure or taken from the default table.			☐Complies ☐Does Not ☐Not Observable ☐Not Applicable	
402.4.1.1 [FR23][1]	Air barrier and thermal barrier installed per manufacturer's instructions.			☐Complies ☐Does Not ☐Not Observable ☐Not Applicable	
402.4.3 [FR20][1]	Fenestration that is not site built is listed and labeled as meeting AAMA /WDMA/CSA 101/I.S.2/A440 or has infiltration rates per NFRC 400 that do not exceed code limits.			☐Complies ☐Does Not ☐Not Observable ☐Not Applicable	
402.4.5 [FR16][2]	IC-rated recessed lighting fixtures sealed at housing/interior finish and labeled to indicate ≤2.0 cfm leakage at 75 Pa.			☐Complies ☐Does Not ☐Not Observable ☐Not Applicable	
403.3.1 [FR12][1]	Supply and return ducts in attics insulated >= R-8 where duct is >= 3 inches in diameter and >= R-6 where < 3 inches. Supply and return ducts in other portions of the building insulated >= R-6 for diameter >= 3 inches and R-4.2 for < 3 inches in diameter.			☐Complies ☐Does Not ☐Not Observable ☐Not Applicable	
403.3.2 [FR13][1]	Ducts, air handlers and filter boxes are sealed with joints/seams compliant with International Mechanical Code or International Residential Code, as applicable.			☐Complies ☐Does Not ☐Not Observable ☐Not Applicable	
403.3.5 [FR15][3]	Building cavities are not used as ducts or plenums.			☐Complies ☐Does Not ☐Not Observable ☐Not Applicable	
403.4 [FR17][2]	HVAC piping conveying fluids above 105 ºF or chilled fluids below 55 ºF are insulated to ≥R-3.	R-_____	R-_____	☐Complies ☐Does Not ☐Not Observable ☐Not Applicable	
403.4.1 [FR24][1]	Protection of insulation on HVAC piping.			☐Complies ☐Does Not ☐Not Observable ☐Not Applicable	
403.5.3 [FR18][2]	Hot water pipes are insulated to ≥R-3.	R-_____	R-_____	☐Complies ☐Does Not ☐Not Observable ☐Not Applicable	

1 High Impact (Tier 1) 2 Medium Impact (Tier 2) 3 Low Impact (Tier 3)

C

B

Section # & Req.ID	Framing / Rough-In Inspection	Plans Verified Value	Field Verified Value	Complies?	Comments/Assumptions
403.6 [FR19][2]	Automatic or gravity dampers are installed on all outdoor air intakes and exhausts.			☐Complies ☐Does Not ☐Not Observable ☐Not Applicable	

Additional Comments/Assumptions:

1 High Impact (Tier 1) 2 Medium Impact (Tier 2) 3 Low Impact (Tier 3)

Section # & Req.ID	Final Inspection Provisions	Plans Verified Value	Field Verified Value	Complies?	Comments/Assumptions
402.1.1, 402.2.1, 402.2.2, 402.2.6 [FI1][1]	Ceiling insulation R-value.	R-_____ ☐ Wood ☐ Steel	R-_____ ☐ Wood ☐ Steel	☐Complies ☐Does Not ☐Not Observable ☐Not Applicable	*See the Envelope Assemblies table for values.*
303.1.1.1, 303.2 [FI2][1]	Ceiling insulation installed per manufacturer's instructions. Blown insulation marked every 300 ft².			☐Complies ☐Does Not ☐Not Observable ☐Not Applicable	
402.2.3 [FI22][2]	Vented attics with air permeable insulation include baffle adjacent to soffit and eave vents that extends over insulation.			☐Complies ☐Does Not ☐Not Observable ☐Not Applicable	
402.2.4 [FI3][1]	Attic access hatch and door insulation ≥R-value of the adjacent assembly.	R-_____	R-_____	☐Complies ☐Does Not ☐Not Observable ☐Not Applicable	
402.4.1.2 [FI17][1]	Blower door test @ 50 Pa. <=5 ach in Climate Zones 1-2, and <=3 ach in Climate Zones 3-8.	ACH 50 =_____	ACH 50 =_____	☐Complies ☐Does Not ☐Not Observable ☐Not Applicable	
403.3.3 [FI27][1]	Ducts are pressure tested to determine air leakage with either: Rough-in test: Total leakage measured with a pressure differential of 0.1 inch w.g. across the system including the manufacturer's air handler enclosure if installed at time of test. Postconstruction test: Total leakage measured with a pressure differential of 0.1 inch w.g. across the entire system including the manufacturer's air handler enclosure.	_____ cfm/100 ft²	_____ cfm/100 ft²	☐Complies ☐Does Not ☐Not Observable ☐Not Applicable	
403.3.4 [FI4][1]	Duct tightness test result of <=4 cfm/100 ft2 across the system or <=3 cfm/100 ft2 without air handler @ 25 Pa. For rough-in tests, verification may need to occur during Framing Inspection.	_____ cfm/100 ft²	_____ cfm/100 ft²	☐Complies ☐Does Not ☐Not Observable ☐Not Applicable	
403.3.2.1 [FI24][1]	Air handler leakage designated by manufacturer at <=2% of design air flow.			☐Complies ☐Does Not ☐Not Observable ☐Not Applicable	
403.1.1 [FI9][2]	Programmable thermostats installed for control of primary heating and cooling systems and initially set by manufacturer to code specifications.			☐Complies ☐Does Not ☐Not Observable ☐Not Applicable	
403.1.2 [FI10][2]	Heat pump thermostat installed on heat pumps.			☐Complies ☐Does Not ☐Not Observable ☐Not Applicable	
403.5.1 [FI11][2]	Circulating service hot water systems have automatic or accessible manual controls.			☐Complies ☐Does Not ☐Not Observable ☐Not Applicable	

1 High Impact (Tier 1) 2 Medium Impact (Tier 2) 3 Low Impact (Tier 3)

Section # & Req.ID	Final Inspection Provisions	Plans Verified Value	Field Verified Value	Complies?	Comments/Assumptions
403.6.1 [FI25][2]	All mechanical ventilation system fans not part of tested and listed HVAC equipment meet efficacy and air flow limits per Table R403.6.1.			☐Complies ☐Does Not ☐Not Observable ☐Not Applicable	
403.2 [FI26][2]	Hot water boilers supplying heat through one- or two-pipe heating systems have outdoor setback control to lower boiler water temperature based on outdoor temperature.			☐Complies ☐Does Not ☐Not Observable ☐Not Applicable	
403.5.1.1 [FI28][2]	Heated water circulation systems have a circulation pump. The system return pipe is a dedicated return pipe or a cold water supply pipe. Gravity and thermos-syphon circulation systems are not present. Controls for circulating hot water system pumps start the pump with signal for hot water demand within the occupancy. Controls automatically turn off the pump when water is in circulation loop is at set-point temperature and no demand for hot water exists.			☐Complies ☐Does Not ☐Not Observable ☐Not Applicable	
403.5.1.2 [FI29][2]	Electric heat trace systems comply with IEEE 515.1 or UL 515. Controls automatically adjust the energy input to the heat tracing to maintain the desired water temperature in the piping.			☐Complies ☐Does Not ☐Not Observable ☐Not Applicable	
403.5.2 [FI30][2]	Demand recirculation water systems have controls that manage operation of the pump and limit the temperature of the water entering the cold water piping to <= 104ºF.			☐Complies ☐Does Not ☐Not Observable ☐Not Applicable	
403.5.4 [FI31][2]	Drain water heat recovery units tested in accordance with CSA B55.1. Potable water-side pressure loss of drain water heat recovery units < 3 psi for individual units connected to one or two showers. Potable water-side pressure loss of drain water heat recovery units < 2 psi for individual units connected to three or more showers.			☐Complies ☐Does Not ☐Not Observable ☐Not Applicable	
404.1 [FI6][1]	90% or more of permanent fixtures have high efficacy lamps.			☐Complies ☐Does Not ☐Not Observable ☐Not Applicable	
404.1.1 [FI23][3]	Fuel gas lighting systems have no continuous pilot light.			☐Complies ☐Does Not ☐Not Observable ☐Not Applicable	
401.3 [FI7][2]	Compliance certificate posted.			☐Complies ☐Does Not ☐Not Observable ☐Not Applicable	

1 High Impact (Tier 1) 2 Medium Impact (Tier 2) 3 Low Impact (Tier 3)

Section # & Req.ID	Final Inspection Provisions	Plans Verified Value	Field Verified Value	Complies?	Comments/Assumptions
303.3 [FI18][3]	Manufacturer manuals for mechanical and water heating systems have been provided.			☐Complies ☐Does Not ☐Not Observable ☐Not Applicable	

Additional Comments/Assumptions:

1 High Impact (Tier 1) 2 Medium Impact (Tier 2) 3 Low Impact (Tier 3)

2018 IECC Energy Efficiency Certificate

Insulation Rating	R-Value	
Above-Grade Wall	21.00	
Below-Grade Wall	13.00	
Floor	0.00	
Ceiling / Roof	49.00	
Ductwork (unconditioned spaces):	_____	
Glass & Door Rating	**U-Factor**	**SHGC**
Window	0.30	0.24
Door	0.30	0.25
Heating & Cooling Equipment	**Efficiency**	
Heating System:__________	_____	
Cooling System:__________	_____	
Water Heater:__________	_____	

Name: __________ **Date:**__________
Comments

A

FILE NAME:

Project
25 High Street LOT 1
25 HIGH STREET, BROOKEVILLE, MD 20833

Owner

Developer

Issue Description	*Date*
PERMIT SET	4-11-2022

GTM Project No.	18.0320
Checked By	GTM
Drawn By	NW/KF
Scale	AS NOTED

Sheet Title
ENERGY CALCS

Sheet No.
EC003

COPYRIGHT, 2019 GTM ARCHITECTS, INC.

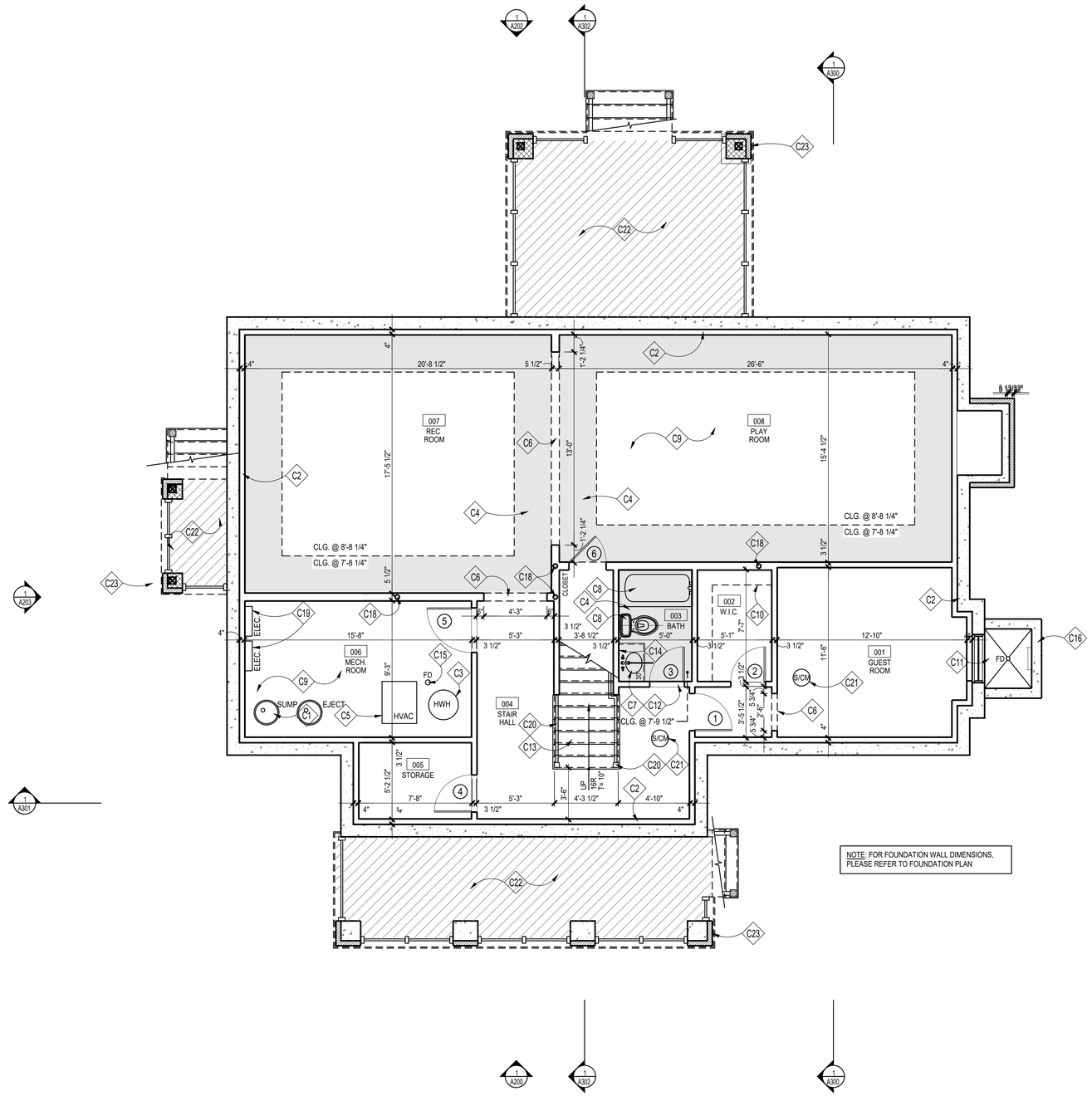

1 BASEMENT PLAN
SCALE: 1/4"=1'=0

PLAN NORTH

CONSTRUCTION NOTES

C1	SUMP PUMP WITH BATTERY POWERED SUMP BACKUP; LOCATION T.B.D.
C2	FUR OUT WALLS W/ FULL 2x4's W/ R-13 BATT INSULATION, TYP.; PROVIDE P.T. SILL; HOLD 1/2" OFF MASONRY WALL
C3	HOT WATER HEATER, LOCATION APPROXIMATE, SEE SHEET '002'
C4	TONED AREA INDICATES LOWERED CEILING TO ALLOW FOR DUCTWORK, BEAMS AND/OR AESTHETIC APPEAL
C5	HVAC, SEE SHEET 'EC001'
C6	CASED OPENING @ 6'-8" FINISHED
C7	VANITY W/ SINK, FAUCET & COUNTERTOP; T.B.S.
C8	PLUMBING FIXTURES & ACCESSORIES T.B.S.
C9	REINF. CONC. SLAB ON GRADE; SEE FOUNDATION PLAN
C10	PROVIDE CLOSET ROD & SHELF
C11	EGRESS WINDOW; MAX. 44" SILL HEIGHT FROM A.F.F.
C12	MARBLE THRESHOLD T.B.S.
C13	WD. STEPS; 1x RISERS W/ TREADS TO MATCH H.W.F.; WOOD RAILING T.B.S, SEE DETAILS '1&5/A303', FOLLOW IRC 2018 R311.7 FOR STAIR AND RAILING
C14	1/4" POLISHED PLATE GLASS MIRROR, T.B.S.
C15	DRAIN FOR HWH & HVAC. LOCATION T.B.D., RUN TO SUMP PUMP
C16	WINDOW WELL; EGRESS LADDER & COVER AS REQ'D. BY CODE DRAIN TO SUMP PUMP OR DAYLIGHT
C17	NOT USED
C18	STEEL COLUMN, SEE FOUNDATION AND FRAMING PLANS
C19	APPROXIMATE ELECTRICAL PANEL LOCATION; FIELD VERIFY FINAL LOCATION
C20	INTERIOR WOOD RAILING, T.B.S., FOLLOW IRC 2018 R311.7
C21	INSTALL INTERCONNECTED & HARD-WIRED SMOKE DETECTORS/ SMOKE & CARBON MONOXIDE DETECTORS IN ACCORDANCE W/ IRC 2018
C22	4" WASHED GRAVEL OVER LANDSCAPE FABRIC
C23	CONC. PIER W/ BRICK VENEER ADHERED DIRECTLY TO FACE OF CONC; EXT. BELOW GRADE. SEE STRUCTURAL FOR DETAIL

NOTE:

1. UNLESS INDICATED OTHERWISE, DIMENSIONS ARE TO FACE OF FRAMING
2. VERIFY ALL EXTERIOR RISER + TREAD DIMENSIONS IN THE FIELD
3. SEE DETAILS '18-20/A304' FOR ENERGY EFFICIENT FRAMING DETAILS
4. PROVIDE MINERAL WOOL SOUND INSULATION IN WALLS, CEILING, + FLOOR OF THE FOLLOWING ROOMS (U.N.O.):

006 MECHANICAL ROOM
003 BATH

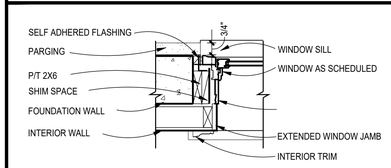

2 TYP. BASEMENT WINDOW/DOOR JAMB
Scale: 1"=1'-0"

WALL TYPES

TYPICAL NEW EXTERIOR WALL: 10" CONC. WALL; SEE FOUNDATION PLAN; FUR WHERE SHOWN WITH 2x4 STUDS @ 16" O.C.,
(SEE THERMAL ENVELOPE, SHEET "EC001" FOR INSULATION INFORMATION)

TYPICAL NON-BEARING INTERIOR PARTITION; 2"x4" STUDS 16" O.C. W/ ½" GYP. BD. EACH SIDE; INCREASE WALL THICKNESS AS SHOWN TO ALIGN FINISHES WHERE SHOWN

REVIEWED
By Michael Kyne at 1:32 pm, May 23, 2022

APPROVED
Montgomery County
Historic Preservation Commission

GTM ARCHITECTS

7735 OLD GEORGETOWN ROAD
SUITE 700
BETHESDA, MD 20814
(240)333-2000
(240)333-2001 FAX
WWW.GTMARCHITECTS.COM

Seal

I certify that these documents were prepared or approved by me, and that I am a duly licensed architect under the laws of the State of Maryland, license number 5585, Expiration Date: 12/06/2022.

Consultant

Project
25 High Street
LOT 1
25 HIGH STREET, BROOKEVILLE, MD 20833

Owner

Developer

Issue Description	Date
PERMIT SET	4-11-2022

GTM Project No.	18.0320
Checked By	GTM
Drawn By	NW/KF
Scale	AS NOTED

Sheet Title
BASEMENT PLAN

Sheet No.
A100

COPYRIGHT, 2019 GTM ARCHITECTS, INC.

FILE NAME:

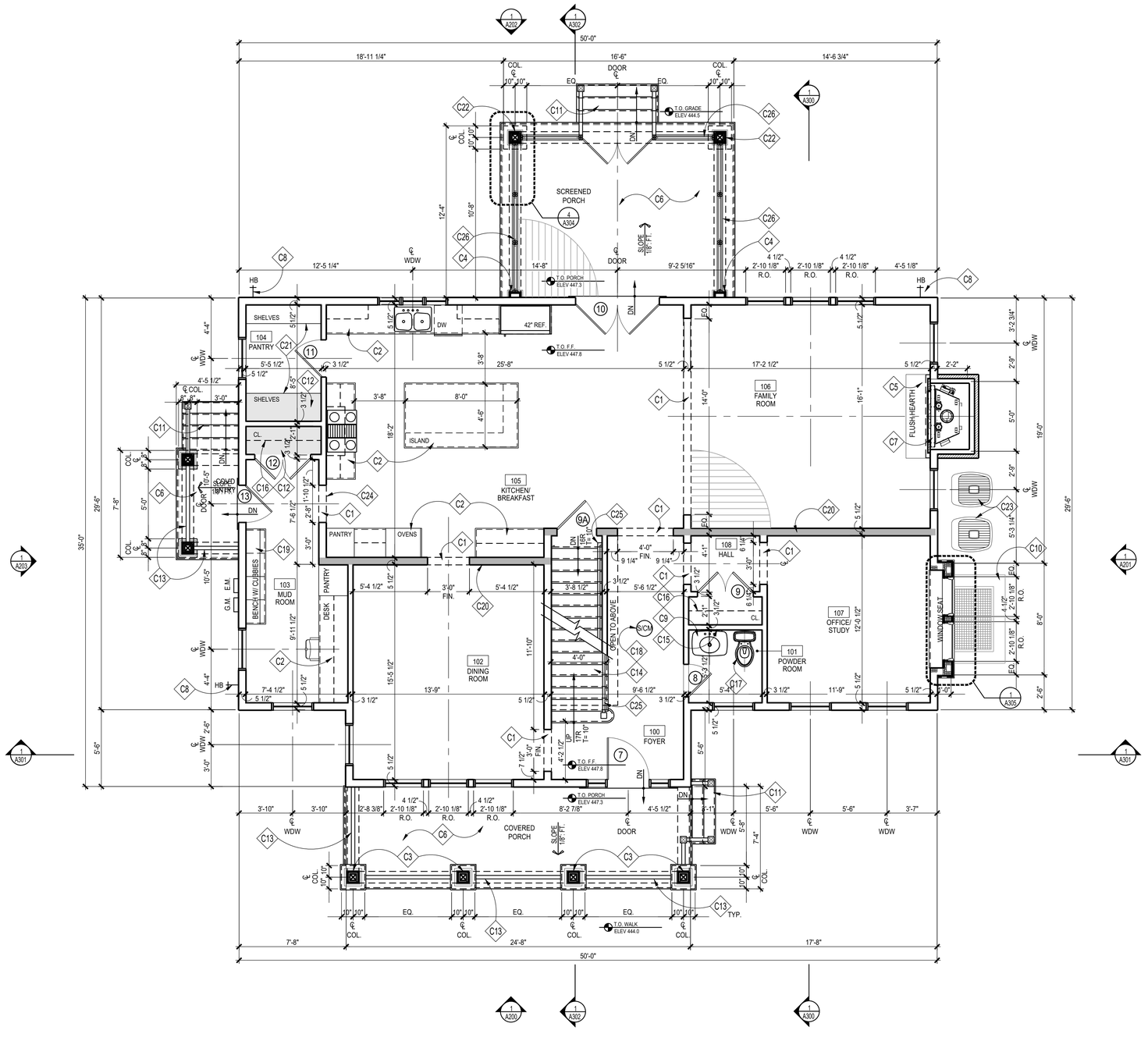

1 FIRST FLOOR PLAN
SCALE: 1/4"=1'=0

PLAN NORTH

CONSTRUCTION NOTES

- C1 CASED OPENING @ 8'-0" FINISHED
- C2 KITCHEN CABINETS, APPLIANCES + COUNTER TOPS, ETC. T.B.S.
- C3 PTD. CRAFTSMAN 10"X10" SQ. TAPERED COLUMN SURROUND W/ NECK MOULD, TUSCAN CAP & BASE
- C4 PTD. PILASTER TO MATCH COLUMNS; SEE ELEVATIONS
- C5 HEARTH, MATERIAL T.B.S.
- C6 T&G PORCH FLOOR; T.B.S.
- C7 B-VENT FIREPLACE, T.B.S. INSTALL PER MANUFACTURER REQUIREMENTS
- C8 FROST PROOF HOSE BIB BELOW; CONFIRM LOCATION
- C9 PEDASTAL SINK, T.B.S.
- C10 WINDOW WELL BELOW; SEE DETAIL '10/A302'
- C11 COMPOSITE/ WOOD TREADS TO GRADE, T.B.S., F.V. RISE/RUN
- C12 TONED AREA INDICATES LOWERED CEILING TO ALLOW FOR RANGE EXHAUST OUTLET
- C13 PROVIDE PTD WOOD GUARDRAIL T.B.S. TO COMPLY W/ IRC 2018
- C14 WD. STEPS; 1x RISERS W/ TREADS TO MATCH H.W.F.; WOOD RAILING T.B.S, SEE DETAILS '1&5/A303', FOLLOW IRC 2018 R311.7 FOR STAIR AND RAILING
- C15 1/4" POLISHED PLATE GLASS MIRROR, T.B.S.
- C16 PROVIDE CLOSET ROD & SHELF
- C17 PLUMBING FIXTURES & ACCESSORIES T.B.S.
- C18 HARD-WIRED SMOKE DETECTOR/CARBON MONOXIDE COMBO UNIT PER IRC 2018
- C19 BUILT-IN BENCH W/ LOCKERS & HOOKS; SEE TYP DETAIL ON '2/A305'
- C20 DARKER TONED WALL INDICATES 2X6 LOAD BEARING WALL @ 16" O.C.
- C21 (5) EQUALLY SPACED SHELVES, FLOOR TO CEILING, PTD.
- C22 PTD. 10" SQ. COLUMN W/ NECK MOULD, TUSCAN CAP & BASE
- C23 CONDENSOR UNIT LOCATION APPROXIMATE
- C24 THRESHOLD T.B.S.
- C25 INTERIOR WOOD RAILING, T.B.S., FOLLOW IRC 2018 R311.7
- C26 CUSTOM FIXED SCREENING; SEE DETAILS

NOTE:

1. UNLESS INDICATED OTHERWISE, DIMENSIONS ARE TO FACE OF FRAMING
2. VERIFY ALL EXTERIOR RISER + TREAD DIMENSIONS IN THE FIELD
3. SEE DETAILS '18-20/A304' FOR ENERGY EFFICIENT FRAMING DETAILS
4. PROVIDE MINERAL WOOL SOUND INSULATION IN WALLS, CEILING, + FLOOR OF THE FOLLOWING ROOMS (U.N.O.):
   101 POWDER ROOM

WALL TYPES

TYPICAL NEW EXTERIOR WALL; 2x6 WOOD STUDS 16" O.C., W/ INSULATION (SEE THERMAL ENVELOPE, SHEET "EC001" FOR INSULATION INFORMATION) W/ , ½" OSB SHEATHING, CONTINUOUS AIR & WATER BARRIER, & SEE ELEVATIONS. INTERIOR FINISH TO BE ½" GYP. BD.

TYPICAL NON-BEARING INTERIOR PARTITION; 2x4 WOOD STUDS 16" O.C. W/ ½" GYP. BD. EACH SIDE, INCREASE WALL THICKNESS AS SHOWN TO ALIGN FINISHES WHERE SHOWN

REVIEWED
By Michael Kyne at 1:32 pm, May 23, 2022

APPROVED
Montgomery County
Historic Preservation Commission

GTM ARCHITECTS

7735 OLD GEORGETOWN ROAD
SUITE 700
BETHESDA, MD 20814
(240)333-2000
(240)333-2001 FAX
WWW.GTMARCHITECTS.COM

Seal

I certify that these documents were prepared or approved by me, and that I am a duly licensed architect under the laws of the State of Maryland, license number 8385, Expiration Date: 12/06/2022

Consultant

Project
25 High Street
LOT 1
25 HIGH STREET, BROOKEVILLE, MD 20833

Owner

Developer

PERMIT SET	4-11-2022
Issue Description	Date

GTM Project No.	18.0320
Checked By	GTM
Drawn By	NW/KF
Scale	AS NOTED

Sheet Title
FIRST FLOOR PLAN

Sheet No.
A101

COPYRIGHT, 2019 GTM ARCHITECTS, INC.

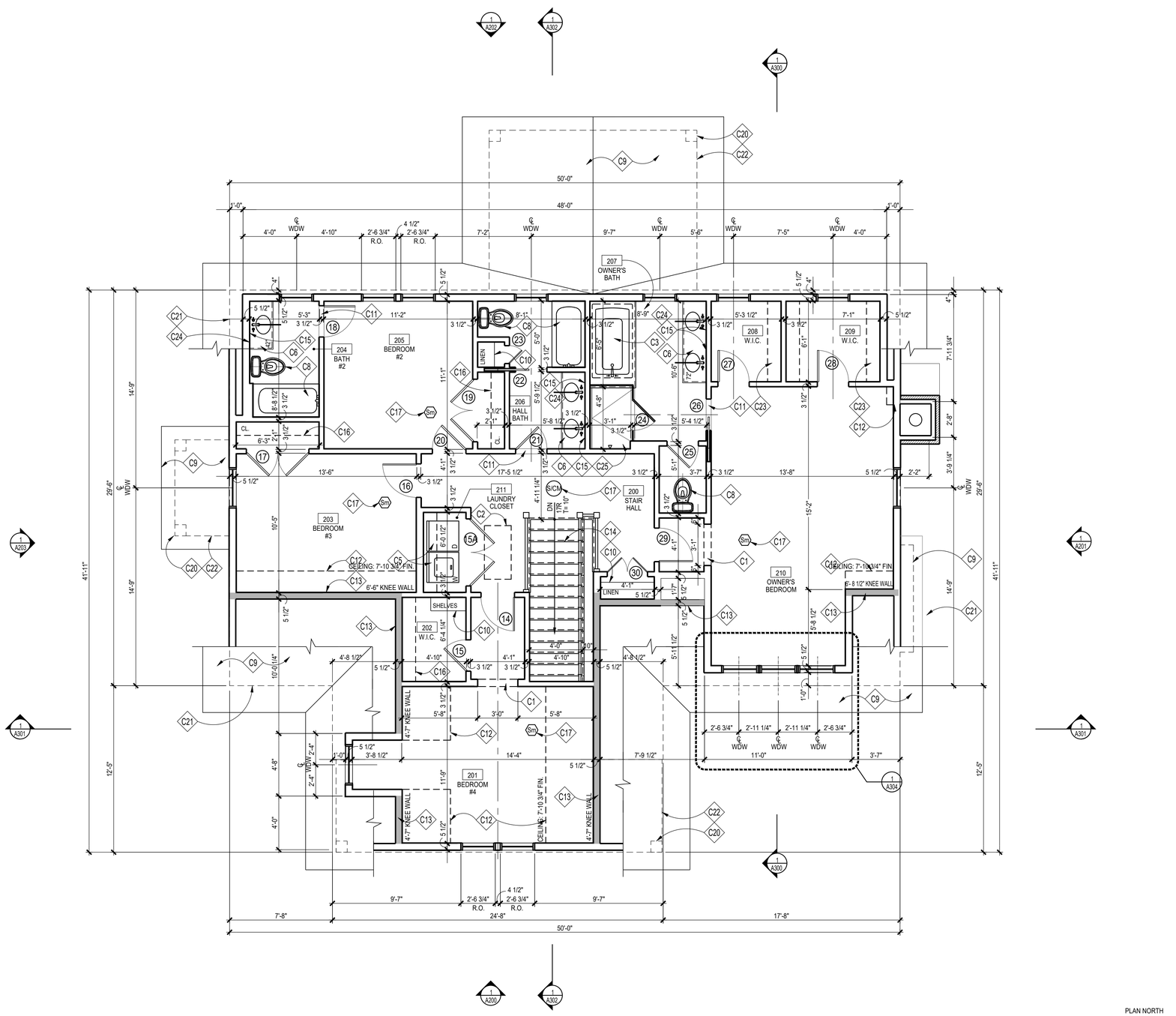

1 SECOND FLOOR PLAN
SCALE: 1/4"=1'=0

PLAN NORTH

CONSTRUCTION NOTES

- C1 CASED OPENING @ 7'-0" FINISHED
- C2 ATTIC ACCESS HATCH ABOVE
- C3 SOAKING TUB WITHIN BUILT-IN DECK, T.B.S.
- C4 NOT USED
- C5 LAUNDRY ROOM CABINETS, APPLIANCES + COUNTER TOPS, ETC. T.B.S.; PROVIDE OVERFLOW PAN AND DRAIN UNDER WASHER
- C6 VANITY W/ SINK, FAUCET & COUNTERTOP; T.B.S.
- C7 NOT USED
- C8 PLUMBING FIXTURES & ACCESSORIES T.B.S.
- C9 ROOF BELOW; SEE ROOF PLAN
- C10 PROVIDE (5) EQUALLY SPACED SHELEVES, PTD.
- C11 MARBLE THRESHOLD, T.B.S.; SEE DETAIL '5/A302'
- C12 DASHED LINE INDICATES SLOPED CEILING
- C13 DARKER TONED WALL INDICATES 2X6 LOAD BEARING WALL @ 16" O.C.
- C14 WD. STEPS; 1x RISERS W/ TREADS TO MATCH H.W.F.; WOOD RAILING T.B.S, SEE DETAILS '1&5/A303', FOLLOW IRC 2018 R311.7 FOR STAIR AND RAILING
- C15 1/4" POLISHED PLATE GLASS MIRROR, T.B.S.
- C16 PROVIDE CLOSET ROD & SHELF
- C17 HARD-WIRED SMOKE DETECTOR/CARBON MONOXIDE COMBO UNIT PER IRC 2018
- C18 NOT USED
- C19 NOT USED
- C20 DASHED LINE OF COLUMN BELOW
- C21 DASHED LINE INDICATES OUTSIDE OF STUD FRAME WALL BELOW
- C22 DASHED LINE INDICATES OUTSIDE FACE OF BEAM
- C23 CUSTOM CLOSET SYSTEM, COORD. W/ OWNER
- C24 MEDICINE CABINET, T.B.S. CONFIRM W/ OWNER
- C25 CUSTOM PAN FORMED TILE SHOWER W/ 4" CURB, PROVIDE MEMBRANE LINER & 1/2" DUROCK AROUND ALL SIDES. EXTEND TILE TO CEILING, TYP. SEE A404 FOR DETAIL

NOTE:

1. UNLESS INDICATED OTHERWISE, DIMENSIONS ARE TO FACE OF FRAMING
2. SEE DETAILS '18-20/A304' FOR ENERGY EFFICIENT FRAMING DETAILS
3. PROVIDE MINERAL WOOL SOUND INSULATION IN WALLS, CEILING, + FLOOR OF THE FOLLOWING ROOMS (U.N.O.):

211	LAUNDRY CLOSET
207	OWNER'S BATH
206	HALL BATH
204	BATH #2

WALL TYPES

TYPICAL NEW EXTERIOR WALL; 2x6 WOOD STUDS 16" O.C., W/ INSULATION (SEE THERMAL ENVELOPE, SHEET "EC001" FOR INSULATION INFORMATION) W/ , ½" OSB SHEATHING, CONTINUOUS AIR & WATER BARRIER, & SEE ELEVATIONS. INTERIOR FINISH TO BE ½" GYP. BD.

TYPICAL NON-BEARING INTERIOR PARTITION; 2x4 WOOD STUDS 16" O.C. W/ ½" GYP. BD. EACH SIDE, INCREASE WALL THICKNESS AS SHOWN TO ALIGN FINISHES WHERE SHOWN

REVIEWED
By Michael Kyne at 1:32 pm, May 23, 2022

APPROVED
Montgomery County
Historic Preservation Commission

GTM ARCHITECTS

7735 OLD GEORGETOWN ROAD
SUITE 700
BETHESDA, MD 20814
(240)333-2000
(240)333-2001 FAX
WWW.GTMARCHITECTS.COM

Seal

I certify that these documents were prepared or approved by me, and that I am a duly licensed architect under the laws of the State of Maryland, license number 8385, Expiration Date: 12/06/2022

Consultant

Project
25 High Street
LOT 1
25 HIGH STREET, BROOKEVILLE, MD 20833

Owner

Developer

PERMIT SET	4-11-2022
Issue Description	*Date*

GTM Project No.	18.0320
Checked By	GTM
Drawn By	NW/KF
Scale	AS NOTED

Sheet Title
SECOND FLOOR PLAN

Sheet No.
A102

COPYRIGHT, 2019 GTM ARCHITECTS, INC.

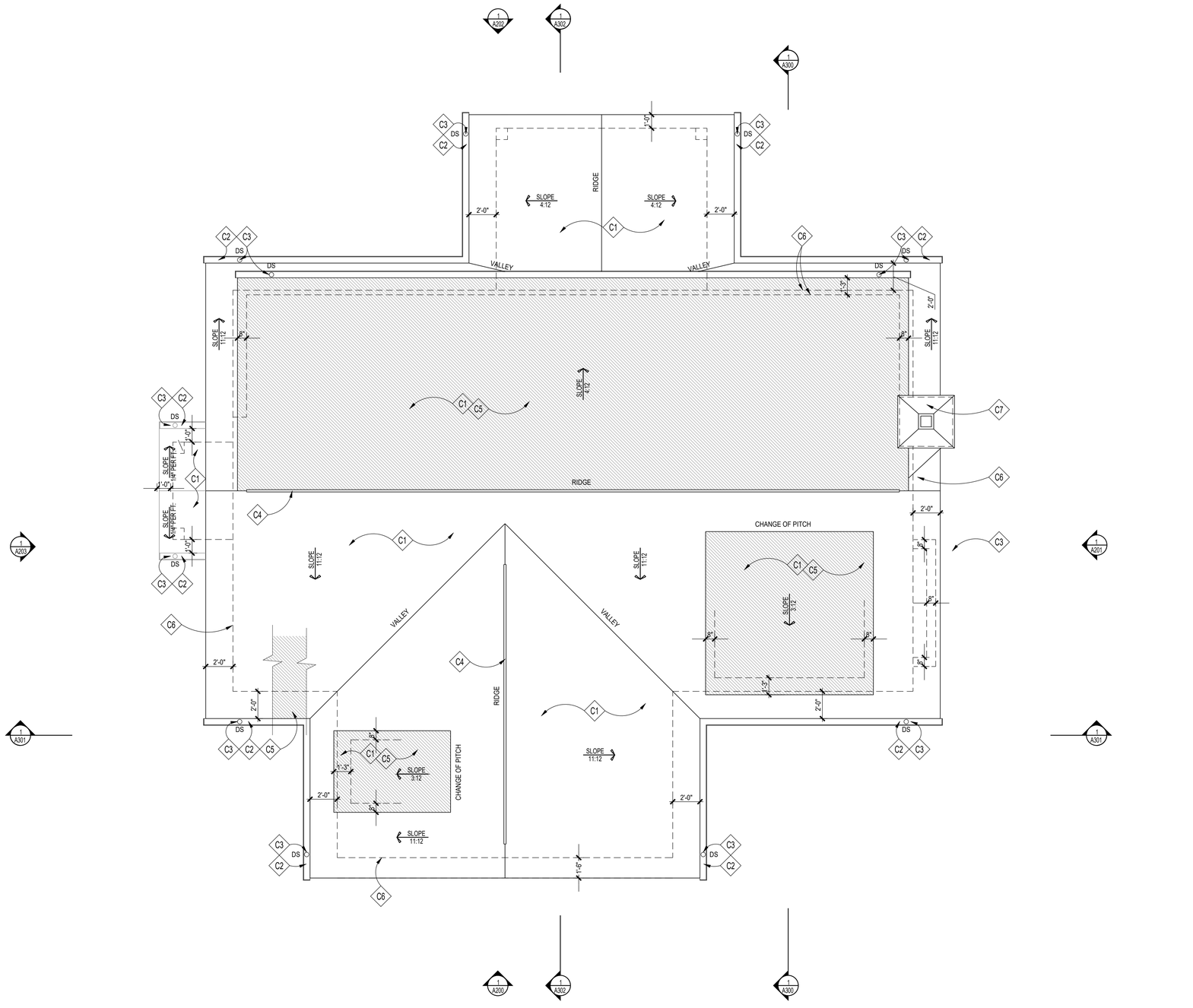

1 ROOF PLAN
SCALE: 1/4"=1'=0

PLAN NORTH

ROOFING NOTES

- C1 CEDAR ROOF SHINGLES, COLOR AND STYLE T.B.S.
- C2 PTD. ALUM. K-SYLE GUTTER T.B.S., TYP.
- C3 DOWNSPOUT T.B.S., TYP.
- C4 RIDGE/HIP VENTS BY COR-A-VENT OR APP'D EQUAL ELIMINATE WITH THE USE OF FOAM INSULATION
- C5 SEE NOTE #1 UNDER GENERAL ROOFING NOTES, TYP.
- C6 DASHED LINE INDICATES OUTSIDE OF STUD FRAME WALL BELOW
- C7 BLACK GALVANIZED STEEL FLUE CHIMNEY CAP BY HOME SAVER (SINGLE FLUE) OR APPROVED EQUAL W/ FLAT SEAM METAL CAP, COLOR T.B.S.

GENERAL ROOFING NOTES

1. PROVIDE SELF-ADHERING, 40 MIL ICE AND WATER GUARD UNDERLAYMENT UNDER SHINGLES AT ALL VALLEYS AND FROM LOWEST EDGE OF ROOF SURFACES TO A POINT AT LEAST 24" INSIDE THE EXTERIOR WALL LINE, AND ON ALL AREAS WITH A SLOPE LESS THAN 4:12.
2. SEE FRAMING PLAN FOR OVERBUILD AREAS
3. DOTTED LINE INDICATES LINE OF BUILDING BELOW

REVIEWED
By Michael Kyne at 1:32 pm, May 23, 2022

APPROVED
Montgomery County
Historic Preservation Commission

GTM ARCHITECTS

7735 OLD GEORGETOWN ROAD
SUITE 700
BETHESDA, MD 20814
(240)333-2000
(240)333-2001 FAX
WWW.GTMARCHITECTS.COM

Seal

I certify that these documents were prepared or approved by me, and that I am a duly licensed architect under the laws of the State of Maryland, license number 8385. Expiration Date: 12-06-2022

Consultant

Project
25 High Street
LOT 1
25 HIGH STREET, BROOKEVILLE, MD 20833

Owner

Developer

PERMIT SET	4-11-2022
Issue Description	Date

GTM Project No.	18.0320
Checked By	GTM
Drawn By	NW/KF
Scale	AS NOTED

Sheet Title
ROOF PLAN

Sheet No.
A103

COPYRIGHT, 2019 GTM ARCHITECTS, INC.

FILE NAME:

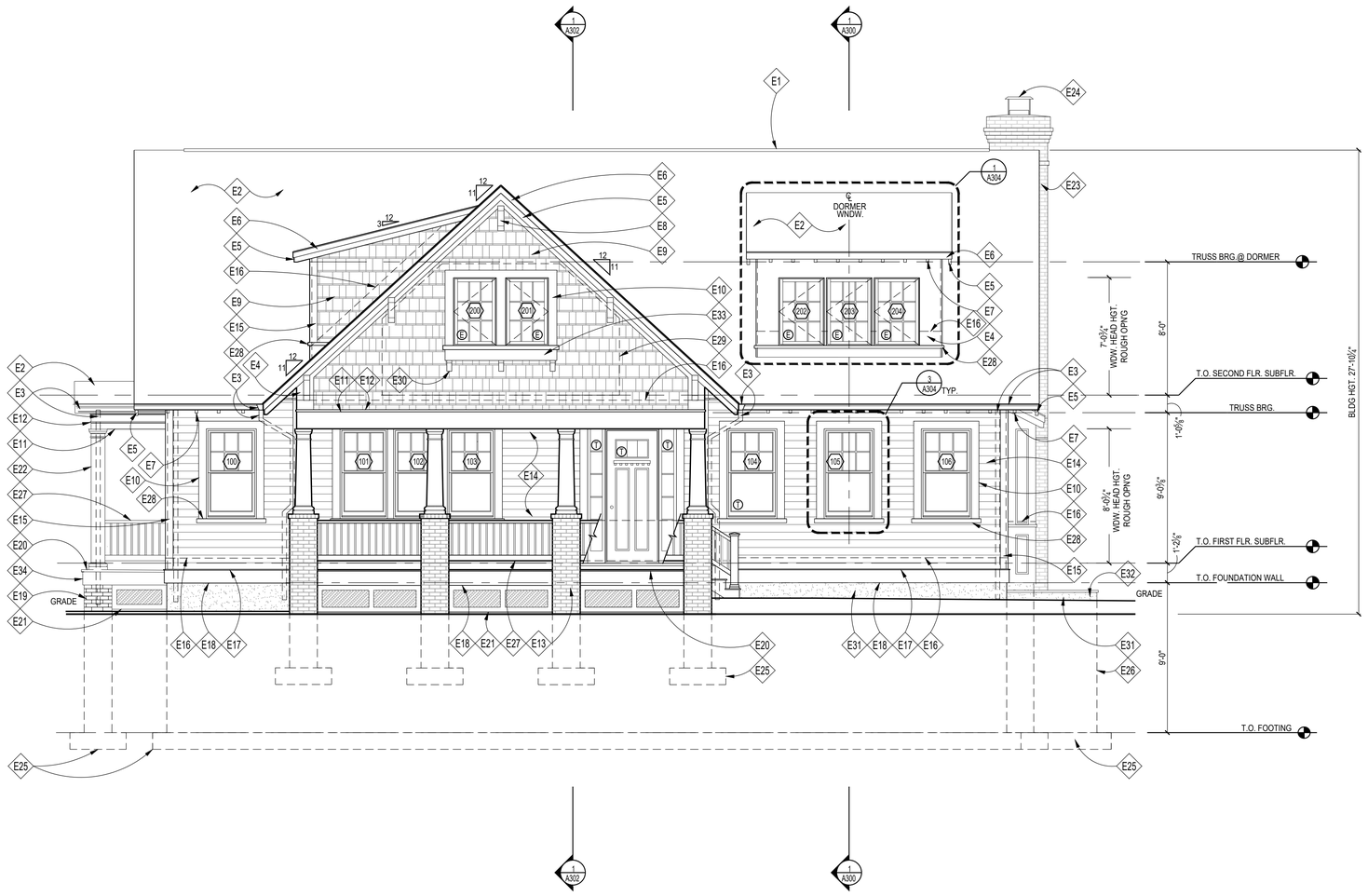

1 FRONT ELEVATION
Scale: 1/4"=1'-0"

ELEVATION NOTES

E1	RIDGE VENTS BY COR-A-VENT OR APPROVED EQUAL, TYP.; OMIT IF USING SPRAY FOAM INSULATION, SEE DETAIL '8/A303'
E2	ROOF SHINGLES; T.B.S., SEE ROOF PLAN
E3	PTD. ALUM. K-STYLE GUTTER & DOWNSPOUTS
E4	PTD. 5/4X WD. TRIM; CUT TO FIT @ FRONT OF DORMERS
E5	PTD. 2X8 WOOD BARGEBOARD
E6	PTD. 1X4 WOOD RAKE/FASCIA
E7	PTD. 2X6 WOOD RAFTER TAILS
E8	WD. BRACKET, TIMBER BUILD 17T1 OR EQ.; NOTCH INTO BOTTOM OF BARGEBOARD
E9	PTD/STD. CEDAR SHINGLE SIDINGS W/ 6" REVEAL
E10	PTD. 5/4X6 WOOD HEAD & JAMB TRIM
E11	PTD. 5/4X12 WOOD FRIEZE BD ALIGN W/ TOP OF WINDOWS/DOORS AND PORCH COLUMNS
E12	PTD. 1X2 WOOD TRIM
E13	PTD. CRAFTSMAN 10"X10" SQ. TAPERED COLUMN SURROUND W/ NECK MOULD, TUSCAN CAP & BASE ON BRICK PIERS
E14	PTD. HARDIEPLANK LAP SIDING, 5" EXPOSURE
E15	PTD. 5/4x6 WD. CORNERBOARD
E16	CONCEALED FLASHING & COUNTER FLASHING @ ALL VERTICAL TRANSITIONS, TYP. EXTEND MIN. 8" BEHIND SIDING. COLOR T.B.S.
E17	PTD. SLOPED 1X WOOD DRIP CAP, SEE 13/A303 FOR DETAIL
E18	PTD. 5/4 x 10 WOOD TRIMBAND
E19	BRICK VENEER, TO BE SELECTED
E20	SLOPED T&G PORCH, T.B.S. W/ STAIRS TO GRADE; PTD WOOD RISERS & TREADS, F.V. RISE/RUN
E21	PTD. LATTICE PANEL OVER 2X4 FRAME; W/ 1X4 STOPS
E22	PTD. 10" SQ. COLUMN W/ NECK MOULD, TUSCAN CAP & BASE
E23	BRICK VENEER CHIMNEY
E24	BLACK GALVANIZED STEEL FLUE CHIMNEY CAP BY HOME SAVER (SINGLE FLUE) OR APPROVED EQUAL W/ FLAT SEAM METAL CAP, COLOR T.B.S.
E25	DASHED LINE INDICATES FOOTING/ PIERS BELOW GRADE
E26	EGRESS WINDOW WELL
E27	PTD. 36"H. WOOD RAILING PER IRC 2018
E28	PTD. 2" HISTORIC SILL
E29	DASHED LINE INDICATES ROOM PROFILE BEYOND
E30	WD. CORBEL, TIMBER BUILD 22T8 OR EQ.
E31	PARGED & PTD. CONC. FOUNDATION WALL WHERE EXPOSED
E32	SLOPED FLAGSTONE CAP OVER CONC. FOUNDATION WALL
E33	PTD. WD. WINDOW PLANTER BOX; T.B.S. SEE 14/A303 FOR DETAIL
E34	PTD. 5/4 x 12 WOOD TRIMBAND

NOTE:

1. VERIFY ALL EXTERIOR RISER & TREAD DIMENSIONS IN FIELD
2. ALL EXTERIOR WOOD TRIM TO BE TREATED FOR PROTECTION AGAINST MOISTURE, ROT, FUNGAL ATTACK & INSECTS, WINDSOR-ONE+, LIFESPAN OR EQ.
3. Ⓣ = TEMPERED GLASS
   Ⓔ = EGRESS

REVIEWED
By Michael Kyne at 1:32 pm, May 23, 2022

APPROVED
Montgomery County
Historic Preservation Commission

GTM ARCHITECTS

7735 OLD GEORGETOWN ROAD
SUITE 700
BETHESDA, MD 20814
(240)333-2000
(240)333-2001 FAX
WWW.GTMARCHITECTS.COM

Seal

I certify that these documents were prepared or approved by me, and that I am a duly licensed architect under the laws of the State of Maryland, license number 8385, Expiration Date: 12-06-2022.

Consultant

Project
25 High Street
LOT 1
25 HIGH STREET, BROOKEVILLE, MD 20833

Owner

Developer

PERMIT SET	4-11-2022
Issue Description	Date

GTM Project No.	18.0320
Checked By	GTM
Drawn By	NW/KF
Scale	AS NOTED

Sheet Title
FRONT ELEVATION

Sheet No.
A200

COPYRIGHT, 2019 GTM ARCHITECTS, INC.

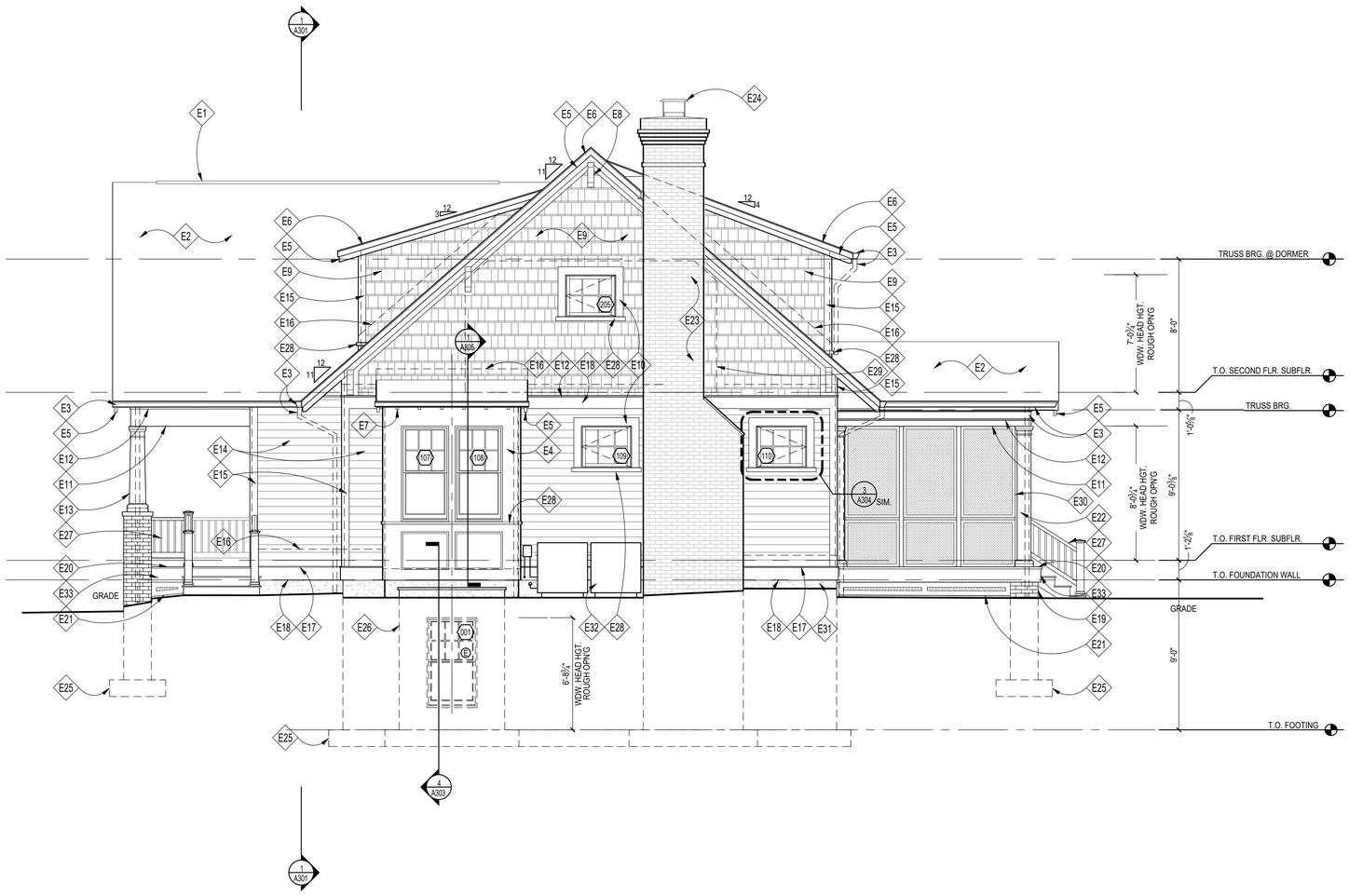

1 RIGHT SIDE ELEVATION
Scale: 1/4"=1'-0"

ELEVATION NOTES

E1	RIDGE VENTS BY COR-A-VENT OR APPROVED EQUAL, TYP.; OMIT IF USING SPRAY FOAM INSULATION, SEE DETAIL '8/A303'
E2	ROOF SHINGLES; T.B.S., SEE ROOF PLAN
E3	PTD. ALUM. K-STYLE GUTTER & DOWNSPOUTS
E4	PTD. 5/4X WD. TRIM CUT TO FIT
E5	PTD. 2X8 WOOD BARGEBOARD
E6	PTD. 1X4 WOOD RAKE/FASCIA
E7	PTD. 2X6 WOOD RAFTER TAILS
E8	WD. BRACKET, TIMBER BUILD 17T1 OR EQ.; NOTCH INTO BOTTOM OF BARGEBOARD
E9	PTD. STD. CEDAR SHINGLE SIDINGS W/ 6" REVEAL
E10	PTD. 5/4X6 WOOD HEAD & JAMB TRIM
E11	PTD. 5/4X12 WOOD FRIEZE BD ALIGN W/ TOP OF WINDOWS/DOORS AND PORCH COLUMNS
E12	PTD. 1X2 WOOD TRIM
E13	PTD. CRAFTSMAN 10"X10" SQ. TAPERED COLUMN SURROUND W/ NECK MOULD, TUSCAN CAP & BASE ON BRICK PIERS
E14	PTD. HARDIEPLANK LAP SIDING, 5" EXPOSURE
E15	PTD. 5/4x6 WD. CORNERBOARD
E16	CONCEALED FLASHING & COUNTER FLASHING @ ALL VERTICAL TRANSITIONS, TYP. EXTEND MIN. 8" BEHIND SIDING. COLOR T.B.S.
E17	PTD. SLOPED 1X WOOD DRIP CAP, SEE 13/A303 FOR DETAIL
E18	PTD. 5/4 x 10 WOOD TRIMBAND
E19	BRICK VENEER, TO BE SELECTED
E20	SLOPED T&G PORCH, T.B.S. W/ STAIRS TO GRADE; PTD WOOD RISERS & TREADS, F.V. RISE/RUN
E21	PTD. LATTICE PANEL OVER 2X4 FRAME; W/ 1X4 STOPS
E22	PTD. 10" SQ. COLUMN W/ NECK MOULD, TUSCAN CAP & BASE
E23	BRICK VENEER CHIMNEY
E24	BLACK GALVANIZED STEEL FLUE CHIMNEY CAP BY HOME SAVER (SINGLE FLUE) OR APPROVED EQUAL W/ FLAT SEAM METAL CAP, COLOR T.B.S.
E25	DASHED LINE INDICATES FOOTING/ PIERS BELOW GRADE
E26	EGRESS WINDOW WELL
E27	PTD. 36"H. WOOD RAILING PER IRC 2018
E28	PTD. 2" HISTORIC SILL
E29	DASHED LINE INDICATES ROOM PROFILE BEYOND
E30	CUSTOM FIXED SCREENING, SEE SHEET A101
E31	PARGED & PTD. CONC. FOUNDATION WALL WHERE EXPOSED
E32	APPROXIMATE CONDENSER UNIT LOCATION GC TO FIELD VERIFY
E33	PTD. 5/4 x 12 WOOD TRIMBAND

NOTE:

1. VERIFY ALL EXTERIOR RISER & TREAD DIMENSIONS IN FIELD
2. ALL EXTERIOR WOOD TRIM TO BE TREATED FOR PROTECTION AGAINST MOISTURE, ROT, FUNGAL ATTACK & INSECTS, WINDSOR-ONE+, LIFESPAN OR EQ.
3. Ⓣ = TEMPERED GLASS
   Ⓔ = EGRESS

REVIEWED
By Michael Kyne at 1:32 pm, May 23, 2022

APPROVED
Montgomery County
Historic Preservation Commission

GTM ARCHITECTS

7735 OLD GEORGETOWN ROAD
SUITE 700
BETHESDA, MD 20814
(240)333-2000
(240)333-2001 FAX
WWW.GTMARCHITECTS.COM

Seal

I certify that these documents were prepared or approved by me, and that I am a duly licensed architect under the laws of the State of Maryland, license number 8385. Expiration Date: 12-06-2022.

Consultant

Project
25 High Street
LOT 1
25 HIGH STREET, BROOKEVILLE, MD 20833

Owner

Developer

PERMIT SET	4-11-2022
Issue Description	*Date*

GTM Project No.	18.0320
Checked By	GTM
Drawn By	NW/KF
Scale	AS NOTED

Sheet Title

RIGHT SIDE ELEVATION

Sheet No.
A201

COPYRIGHT, 2019 GTM ARCHITECTS, INC.

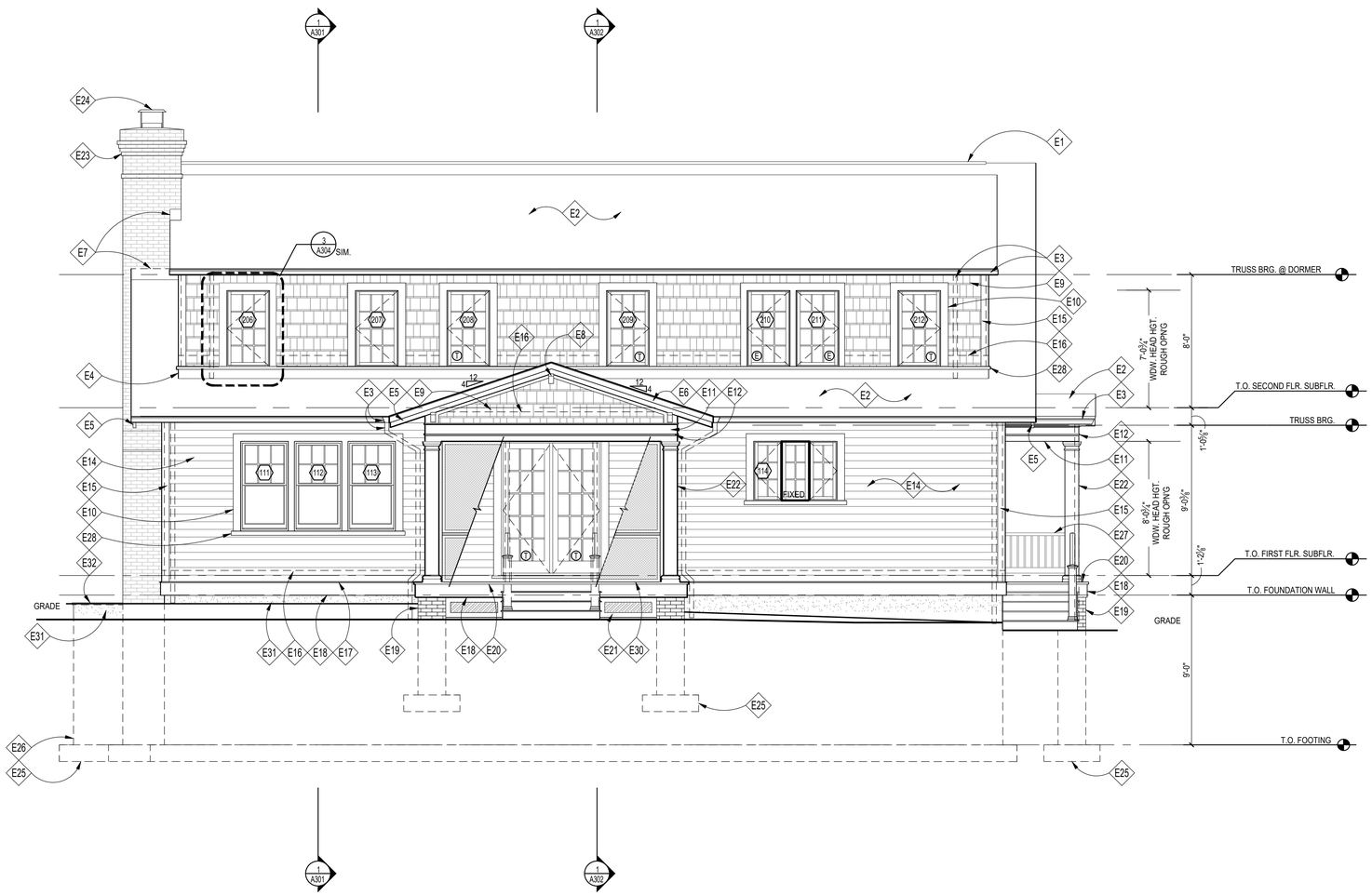

1 REAR ELEVATION
Scale: 1/4"=1'-0"

ELEVATION NOTES

E1	RIDGE VENTS BY COR-A-VENT OR APPROVED EQUAL, TYP.; OMIT IF USING SPRAY FOAM INSULATION, SEE DETAIL '8/A303'
E2	ROOF SHINGLES; T.B.S., SEE ROOF PLAN
E3	PTD. ALUM. K-STYLE GUTTER & DOWNSPOUTS
E4	PTD. 5/4X WD. TRIM CUT TO FIT
E5	PTD. 2X8 WOOD BARGEBOARD
E6	PTD. 1X4 WOOD RAKE/FASCIA
E7	COPPER FLASHING @ VERTICAL TRANSITION; EXTEND MIN. 8" UP FACE OF CHIMNEY
E8	WD. CORBEL, TIMBER BUILD 22T6 OR EQ.
E9	PTD. STD. CEDAR SHINGLE SIDINGS W/ 6" REVEAL
E10	PTD. 5/4X6 WOOD HEAD & JAMB TRIM
E11	PTD. 5/4X12 WOOD FRIEZE BD ALIGN W/ TOP OF WINDOWS/DOORS AND PORCH COLUMNS
E12	PTD. 1X2 WOOD TRIM
E13	NOT USED
E14	PTD. HARDIEPLANK LAP SIDING, 5" EXPOSURE
E15	PTD. 5/4x6 WD. CORNERBOARD
E16	CONCEALED FLASHING & COUNTER FLASHING @ ALL VERTICAL TRANSITIONS, TYP. EXTEND MIN. 8" BEHIND SIDING. COLOR T.B.S.
E17	PTD. SLOPED 1X WOOD DRIP CAP, SEE 13/A303 FOR DETAIL
E18	PTD. 5/4 x 10 WOOD TRIMBAND
E19	BRICK VENEER, TO BE SELECTED
E20	SLOPED T&G PORCH, T.B.S. W/ STAIRS TO GRADE, COMPOSITE WOOD RISERS & TREADS, F.V. RISE/RUN
E21	SLOPED T&G PORCH, T.B.S. W/ STAIRS TO GRADE; PTD WOOD RISERS & TREADS, F.V. RISE/RUN
E22	PTD. 10" SQ. COLUMN W/ NECK MOULD, TUSCAN CAP & BASE
E23	BRICK VENEER CHIMNEY
E24	BLACK GALVANIZED STEEL FLUE CHIMNEY CAP BY HOME SAVER (SINGLE FLUE) OR APPROVED EQUAL W/ FLAT SEAM METAL CAP, COLOR T.B.S.
E25	DASHED LINE INDICATES FOOTING/ PIERS BELOW GRADE
E26	EGRESS WINDOW WELL
E27	PTD. 36"H. WOOD RAILING PER IRC 2018
E28	PTD. 2" HISTORIC SILL
E29	NOT USED
E30	CUSTOM FIXED SCREENING, SEE SHEET A101
E31	PARGED & PTD. CONC. FOUNDATION WALL WHERE EXPOSED
E32	SLOPED FLAGSTONE CAP OVER CONC. FOUNDATION WALL

NOTE:

1. VERIFY ALL EXTERIOR RISER & TREAD DIMENSIONS IN FIELD
2. ALL EXTERIOR WOOD TRIM TO BE TREATED FOR PROTECTION AGAINST MOISTURE, ROT, FUNGAL ATTACK & INSECTS, WINDSOR-ONE+, LIFESPAN OR EQ.
3. (T) = TEMPERED GLASS
   (E) = EGRESS

REVIEWED
By Michael Kyne at 1:32 pm, May 23, 2022

APPROVED
Montgomery County
Historic Preservation Commission

GTM ARCHITECTS

7735 OLD GEORGETOWN ROAD
SUITE 700
BETHESDA, MD 20814
(240)333-2000
(240)333-2001 FAX
WWW.GTMARCHITECTS.COM

Seal

I certify that these documents were prepared or approved by me, and that I am a duly licensed architect under the laws of the State of Maryland, license number 8385, Expiration Date: 12-06-2022.

Consultant

Project
25 High Street
LOT 1
25 HIGH STREET, BROOKEVILLE, MD 20833

Owner

Developer

PERMIT SET	4-11-2022
Issue Description	Date

GTM Project No.	18.0320
Checked By	GTM
Drawn By	NW/KF
Scale	AS NOTED

Sheet Title
REAR ELEVATION

Sheet No.
A202

COPYRIGHT, 2019 GTM ARCHITECTS, INC.

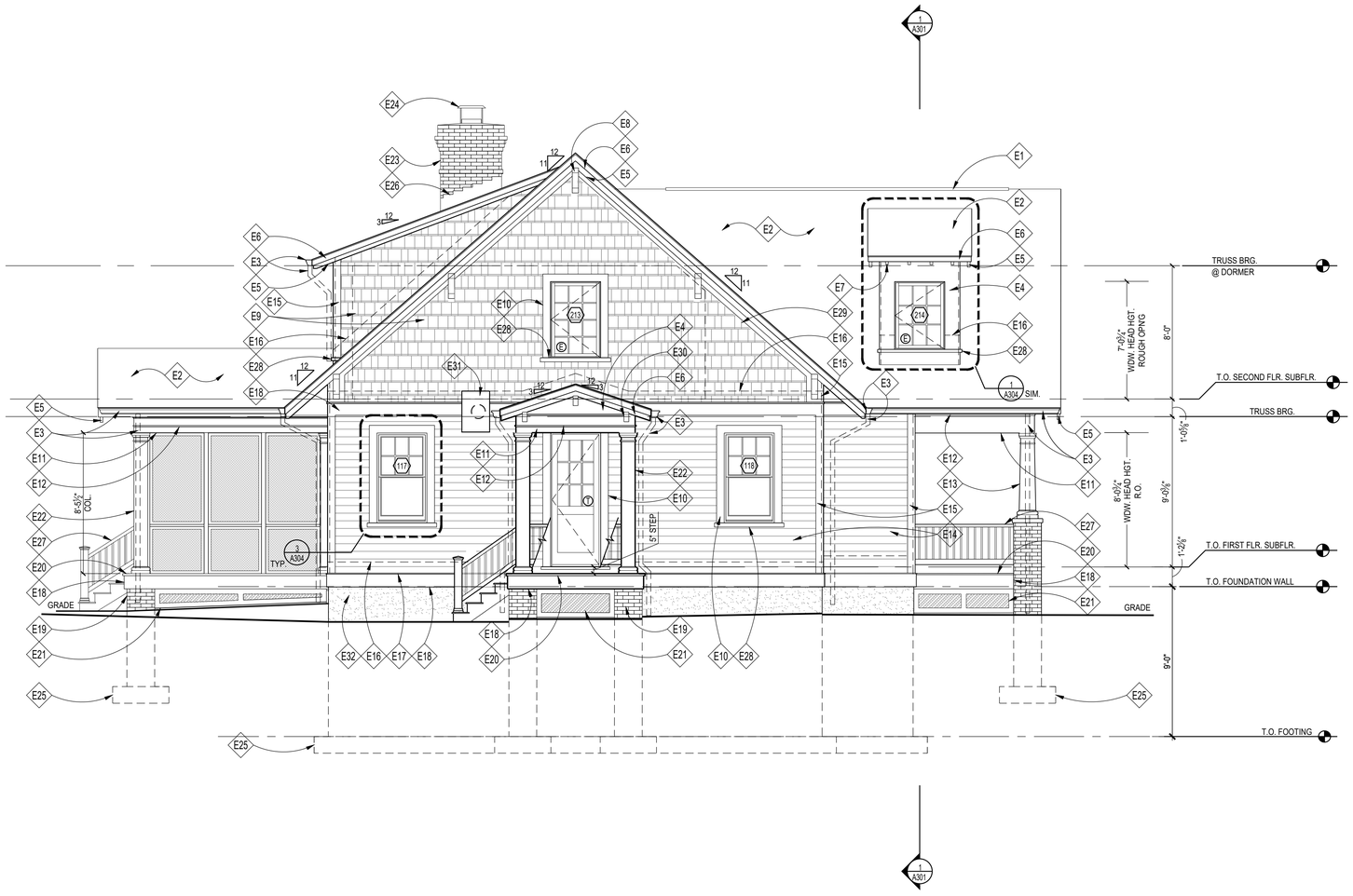

1 LEFT SIDE ELEVATION
Scale: 1/4"=1'-0"

ELEVATION NOTES

E1	RIDGE VENTS BY COR-A-VENT OR APPROVED EQUAL, TYP.; OMIT IF USING SPRAY FOAM INSULATION, SEE DETAIL '8/A303'
E2	ROOF SHINGLES; T.B.S., SEE ROOF PLAN
E3	PTD. ALUM. K-STYLE GUTTER & DOWNSPOUTS
E4	PTD. 5/4X WD. TRIM; CUT TO FIT
E5	PTD. 2X8 WOOD BARGEBOARD
E6	PTD. 1X4 WOOD RAKE/FASCIA
E7	PTD. 2X6 WOOD RAFTER TAILS
E8	WD. BRACKET, TIMBER BUILD 17T1 OR EQ.; NOTCH INTO BOTTOM OF BARGEBOARD
E9	PTD. STD. CEDAR SHINGLE SIDINGS W/ 6" REVEAL
E10	PTD. 5/4X6 WOOD HEAD & JAMB TRIM
E11	PTD. 5/4X12 WOOD FRIEZE BD ALIGN W/ TOP OF WINDOWS/DOORS AND PORCH COLUMNS
E12	PTD. 1X2 WOOD TRIM
E13	PTD. CRAFTSMAN 10"X10" SQ. TAPERED COLUMN SURROUND W/ NECK MOULD, TUSCAN CAP & BASE ON BRICK PIERS
E14	PTD. HARDIEPLANK LAP SIDING, 5" EXPOSURE
E15	PTD. 5/4x6 WD. CORNERBOARD
E16	CONCEALED FLASHING & COUNTER FLASHING @ ALL VERTICAL TRANSITIONS, TYP. EXTEND MIN. 8" BEHIND SIDING. COLOR T.B.S.
E17	PTD. SLOPED 1X WOOD DRIP CAP, SEE 13/A303 FOR DETAIL
E18	PTD. 5/4x WOOD TRIMBAND
E19	BRICK VENEER, TO BE SELECTED
E20	SLOPED T&G PORCH, T.B.S. W/ STAIRS TO GRADE; PTD WOOD RISERS & TREADS, F.V. RISE/RUN
E21	PTD. LATTICE PANEL OVER 2X4 FRAME; W/ 1X4 STOPS
E22	PTD. 10" SQ. COLUMN W/ NECK MOULD, TUSCAN CAP & BASE
E23	BRICK VENEER CHIMNEY
E24	BLACK GALVANIZED STEEL FLUE CHIMNEY CAP BY HOME SAVER (SINGLE FLUE) OR APPROVED EQUAL W/ FLAT SEAM METAL CAP, COLOR T.B.S.
E25	DASHED LINE INDICATES FOOTING/ PIERS BELOW GRADE
E26	COPPER FLASHING @ VERTICAL TRANSITION; EXTEND MIN. 8" UP FACE OF CHIMNEY
E27	PTD. 36"H. WOOD RAILING PER IRC 2018
E28	PTD. 2" HISTORIC SILL
E29	DASHED LINE INDICATES ROOM PROFILE BEYOND
E30	WD. CORBEL, TIMBER BUILD 22T6 OR EQ.
E31	PROPOSED LOCATION FOR RANGE HOOD EXHAUST
E32	PARGED & PTD. CONC. FOUNDATION WALL WHERE EXPOSED

NOTE:

1. VERIFY ALL EXTERIOR RISER & TREAD DIMENSIONS IN FIELD
2. ALL EXTERIOR WOOD TRIM TO BE TREATED FOR PROTECTION AGAINST MOISTURE, ROT, FUNGAL ATTACK & INSECTS, WINDSOR-ONE+, LIFESPAN OR EQ.
3. Ⓣ = TEMPERED GLASS
   Ⓔ = EGRESS

REVIEWED
By Michael Kyne at 1:35 pm, May 23, 2022

APPROVED
Montgomery County
Historic Preservation Commission

GTM ARCHITECTS

7735 OLD GEORGETOWN ROAD
SUITE 700
BETHESDA, MD 20814
(240)333-2000
(240)333-2001 FAX
WWW.GTMARCHITECTS.COM

Seal

I certify that these documents were prepared or approved by me, and that I am a duly licensed architect under the laws of the State of Maryland, license number 8385, Expiration Date: 12-06-2022.

Consultant

Project
25 High Street
LOT 1
25 HIGH STREET, BROOKEVILLE, MD 20833

Owner

Developer

PERMIT SET	4-11-2022
Issue Description	Date

GTM Project No.	18.0320
Checked By	GTM
Drawn By	NW/KF
Scale	AS NOTED

Sheet Title
LEFT SIDE ELEVATION

Sheet No.
A203

COPYRIGHT, 2019 GTM ARCHITECTS, INC.

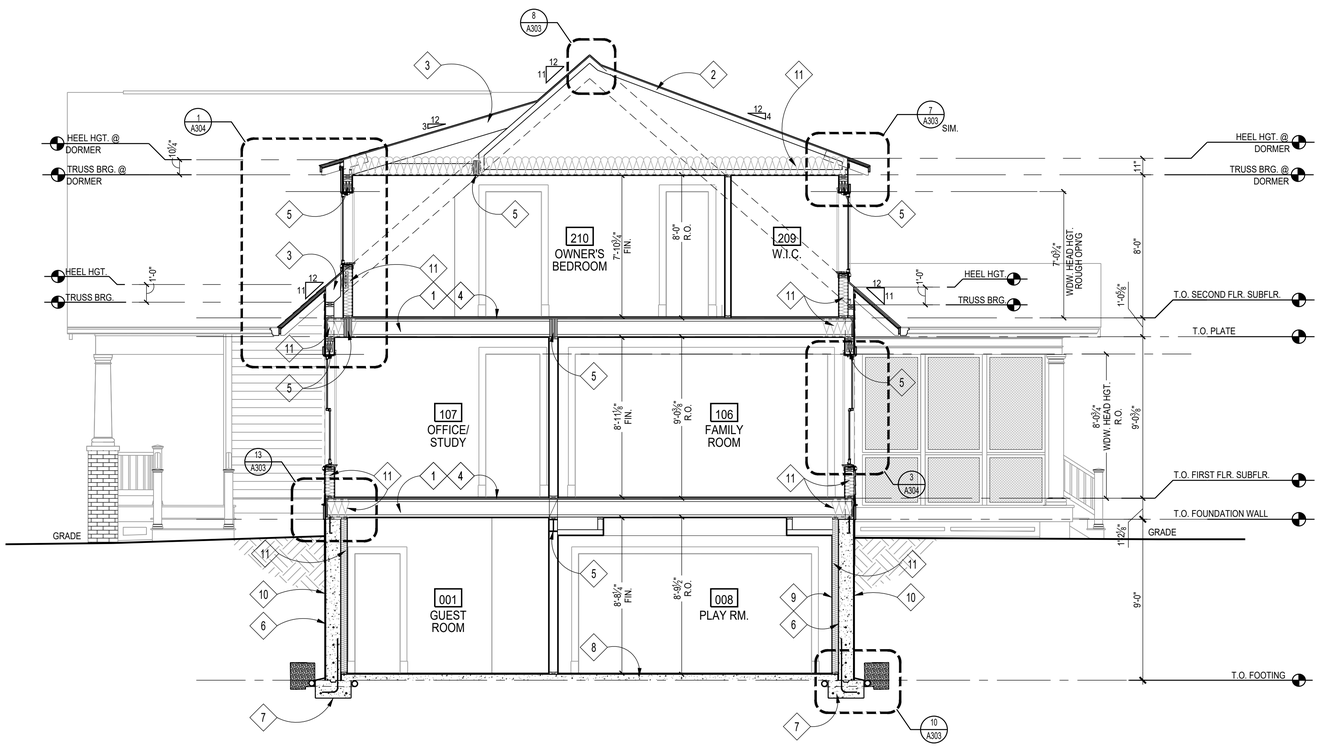

1 BUILDING SECTION
Scale: 1/4"=1'-0"

CONSTRUCTION NOTES

1. TJI FLOOR JOISTS; SEE FRAMING PLANS
2. ROOF TRUSSES BY TRUSS MANUFACTURER; SEE FRAMING PLANS
3. ROOF RAFTER; SEE FRAMING PLANS
4. 3/4" T&G PLYWD. SUBFLOOR; GLUED & SCREWED
5. BEAM/ LINTEL/ HEADER; SEE FRAMING PLANS
6. CONCRETE FOUNDATION WALL; SEE FOUNDATION PLAN
7. FOOTING; SEE FOUNDATION PLAN
8. REINF. CONC. SLAB; SEE FOUNDATION PLAN
9. FUR OUT BASEMENT WALLS W/ 2x4's @ 16" O.C. & R-13 BATT INSULATION, TYP.
10. DRAINAGE BOARD & WATERPROOFING BELOW GRADE
11. INSULATION, SEE SHEET EC001 FOR DETAILS

REVIEWED
By Michael Kyne at 1:35 pm, May 23, 2022

APPROVED
Montgomery County
Historic Preservation Commission

GTM ARCHITECTS

7735 OLD GEORGETOWN ROAD
SUITE 700
BETHESDA, MD 20814
(240)333-2000
(240)333-2001 FAX
WWW.GTMARCHITECTS.COM

Seal

I certify that these documents were prepared or approved by me, and that I am a duly licensed architect under the laws of the State of Maryland, license number 8385, Expiration Date: 12-06-2022.

Consultant

Project
25 High Street
LOT 1
25 HIGH STREET, BROOKEVILLE, MD 20833

Owner

Developer

PERMIT SET	4-11-2022
Issue Description	*Date*

GTM Project No.	18.0320
Checked By	GTM
Drawn By	NW/KF
Scale	AS NOTED

Sheet Title
BUILDING SECTION

Sheet No.
A300

COPYRIGHT, 2019 GTM ARCHITECTS, INC.

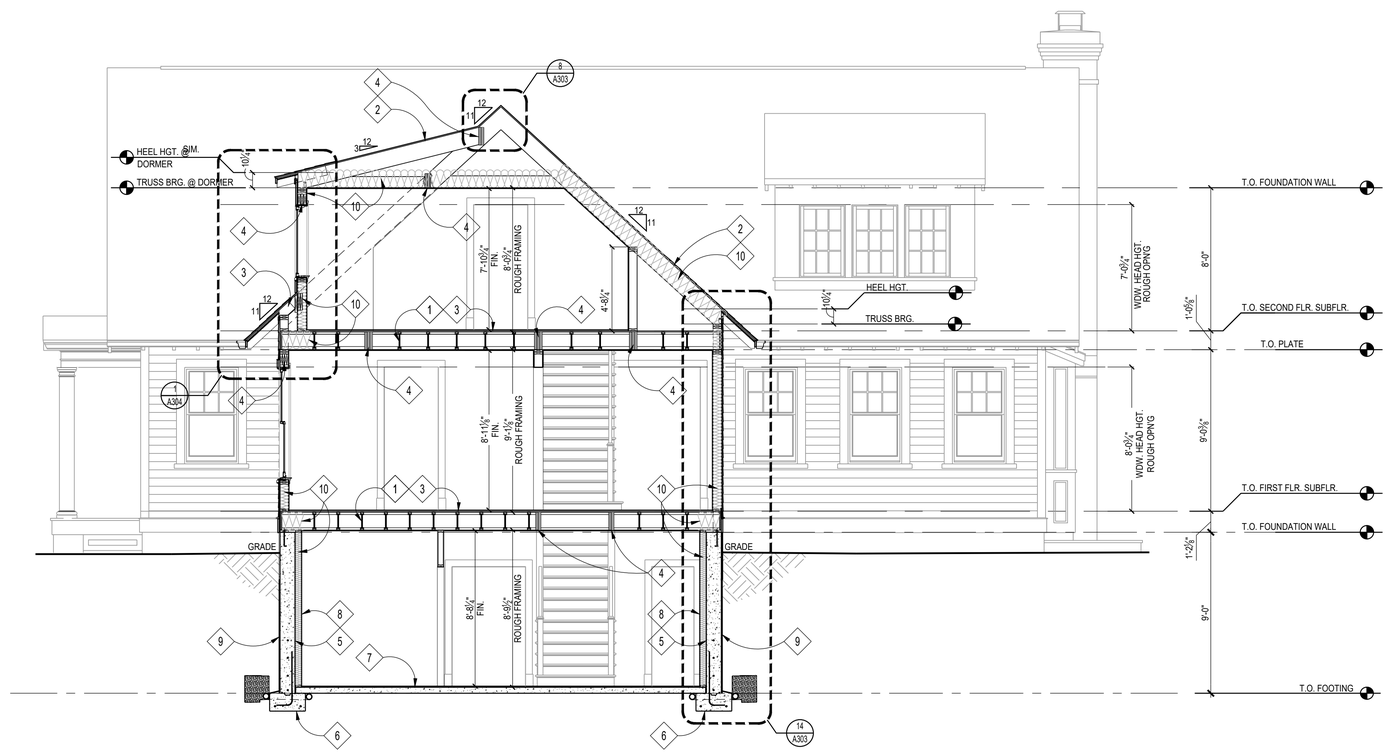

1 BUILDING SECTION

Scale: 1/4"=1'-0"

CONSTRUCTION NOTES

1. TJI FLOOR JOISTS; SEE FRAMING PLANS
2. ROOF RAFTER, SEE FRAMING PLANS
3. 3/4" T&G PLYWD. SUBFLOOR; GLUED & SCREWED
4. BEAM/ LINTEL/ HEADER; SEE FRAMING PLANS
5. CONCRETE FOUNDATION WALL; SEE FOUNDATION PLAN
6. FOOTING; SEE FOUNDATION PLAN
7. REINF. CONC. SLAB; SEE FOUNDATION PLAN
8. FUR OUT BASEMENT WALLS W/ 2x4's @ 16" O.C. & R-13 BATT INSULATION, TYP.
9. DRAINAGE BOARD AND WATERPROOFING
10. INSULATION, SEE SHEET EC001 FOR DETAILS

REVIEWED
By Michael Kyne at 1:35 pm, May 23, 2022

APPROVED
Montgomery County
Historic Preservation Commission

GTM ARCHITECTS

7735 OLD GEORGETOWN ROAD
SUITE 700
BETHESDA, MD 20814
(240)333-2000
(240)333-2001 FAX
WWW.GTMARCHITECTS.COM

Seal

I certify that these documents were prepared or approved by me, and that I am a duly licensed architect under the laws of the State of Maryland, License No. 6305, Expiration Date: 12-06-2022.

Consultant

Project

25 High Street
LOT 1

25 HIGH STREET, BROOKEVILLE, MD 20833

Owner

Developer

PERMIT SET	4-11-2022

Issue Description	*Date*

GTM Project No.	18.0320
Checked By	GTM
Drawn By	NW/KF
Scale	AS NOTED

Sheet Title

BUILDING SECTION

Sheet No.

A301

COPYRIGHT, 2019 GTM ARCHITECTS, INC.

FILE NAME:

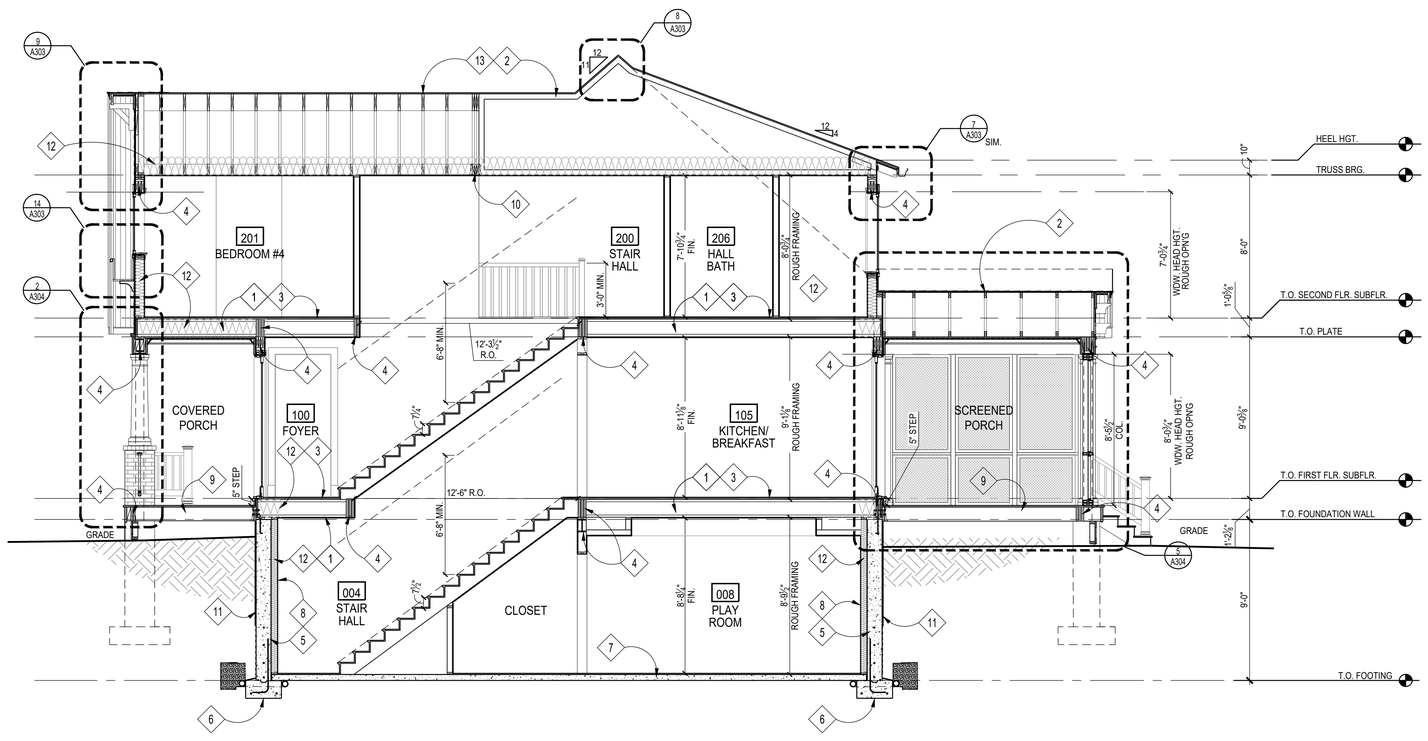

1 BUILDING SECTION
Scale: 1/4"=1'-0"

CONSTRUCTION NOTES

1. TJI FLOOR JOISTS; SEE FRAMING PLANS
2. ROOF TRUSSES BY TRUSS MANUFACTURER; SEE FRAMING PLANS
3. 3/4" T&G PLYWD. SUBFLOOR; GLUED & SCREWED
4. BEAM/ LINTEL/ HEADER; SEE FRAMING PLANS
5. CONCRETE FOUNDATION WALL; SEE FOUNDATION PLAN
6. FOOTING; SEE FOUNDATION PLAN
7. REINF. CONC. SLAB; SEE FOUNDATION PLAN
8. FUR OUT BASEMENT WALLS W/ 2x4's @ 16" O.C. & R-13 BATT INSULATION, TYP.
9. P.T. 2X DECK JOISTS, SEE FRAMING PLANS
10. GIRDER TRUSS BY TRUSS MANUFACTURER; SEE FRAMING PLANS
11. DRAINAGE BOARD AND WATERPROOFING
12. INSULATION, SEE SHEET EC001 FOR DETAILS
13. ROOF RAFTER, SEE FRAMING PLANS

REVIEWED
By Michael Kyne at 1:32 pm, May 23, 2022

APPROVED
Montgomery County
Historic Preservation Commission

GTM ARCHITECTS

7735 OLD GEORGETOWN ROAD
SUITE 700
BETHESDA, MD 20814
(240)333-2000
(240)333-2001 FAX
WWW.GTMARCHITECTS.COM

Seal

I certify that these documents were prepared or approved by me, and that I am a duly licensed architect under the laws of the State of Maryland, license number 8385. Expiration Date: 12-06-2022.

Consultant

Project
25 High Street LOT 1
25 HIGH STREET, BROOKEVILLE, MD 20833

Owner

Developer

Issue Description	Date
PERMIT SET	4-11-2022

GTM Project No.	18.0320
Checked By	GTM
Drawn By	NW/KF
Scale	AS NOTED

Sheet Title
BUILDING SECTION

Sheet No.
A302

COPYRIGHT, 2019 GTM ARCHITECTS, INC.

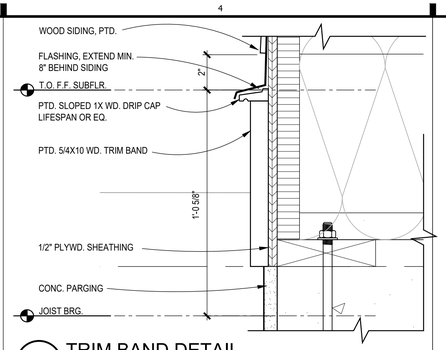

13 TRIM BAND DETAIL
SCALE: 3"=1'-0"

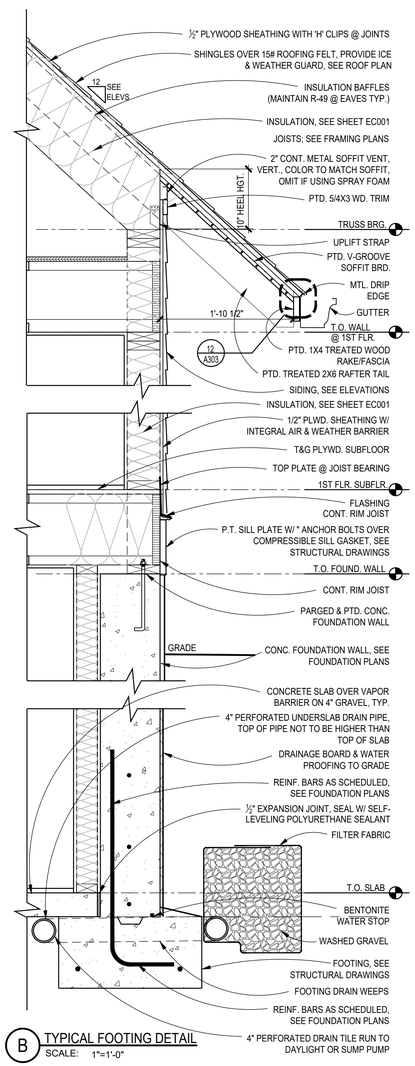

B TYPICAL FOOTING DETAIL
SCALE: 1"=1'-0"

6 GARAGE SILL DETAIL
SCALE: 1" = 1'-0"

10 NOT USED
SCALE:

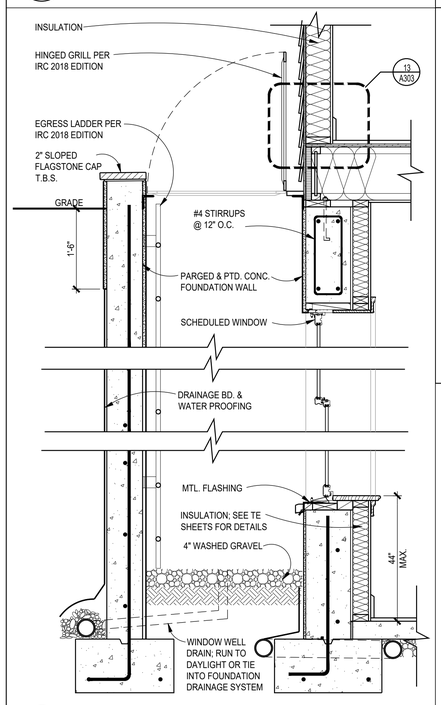

4 WINDOW WELL DETAIL, TYP.
SCALE: 3/4"=1'-0"

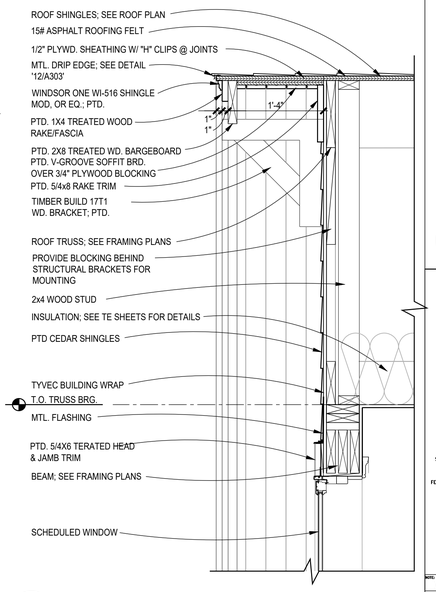

9 ROOF EAVE DETAIL
SCALE: 1 1/2" = 1'-0"

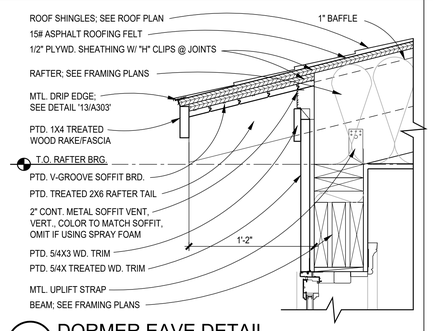

7 DORMER EAVE DETAIL
SCALE: 1 1/2" = 1'-0"

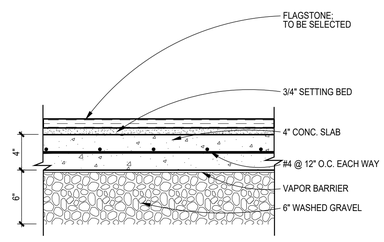

3 FLAGSTONE PATIO DETAIL
SCALE: 1 1/2" = 1'-0"

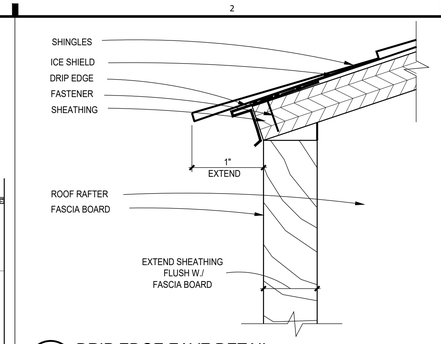

12 DRIP EDGE EAVE DETAIL
SCALE: 1"=1"

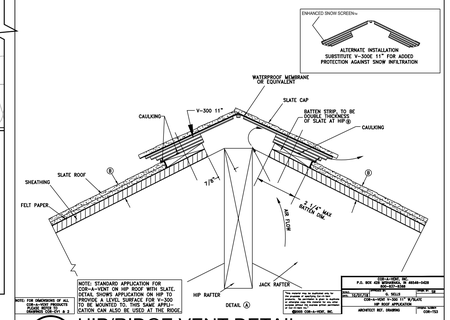

8 HIP/RIDGE VENT DETAIL
SCALE: N.T.S.

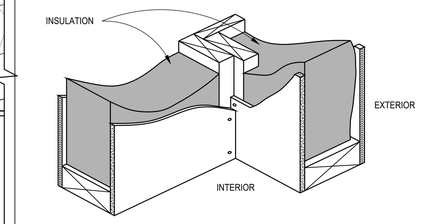

6 CORNER FRAMING DETAIL
SCALE: N.T.S.

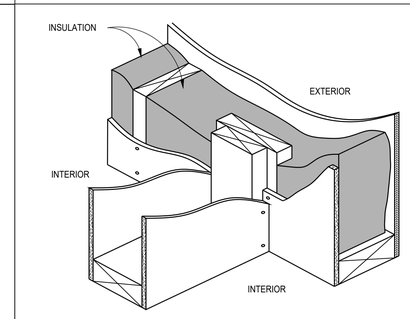

2 INTERSECTING WALL FRAMING
SCALE: N.T.S.

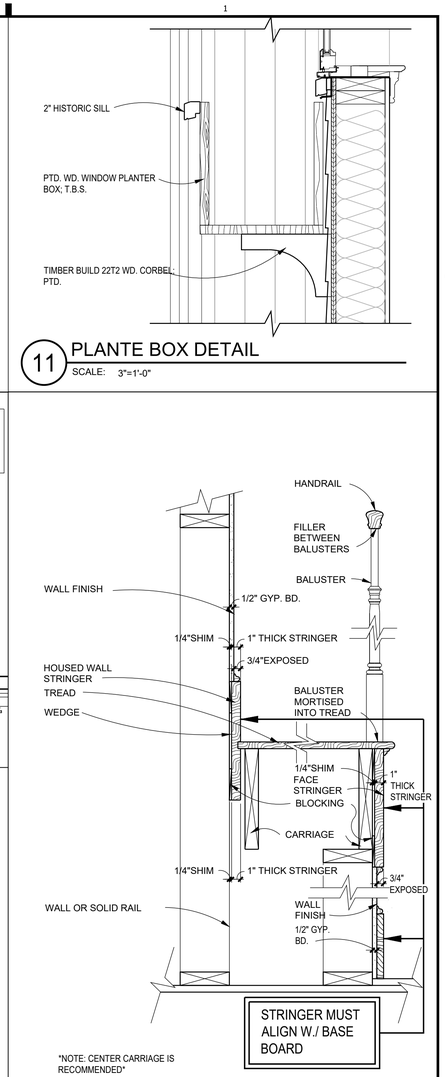

11 PLANTE BOX DETAIL
SCALE: 3"=1'-0"

5 TYP. WOOD STAIR TRIM DETAIL
SCALE: 1 1/2"=1'-0"

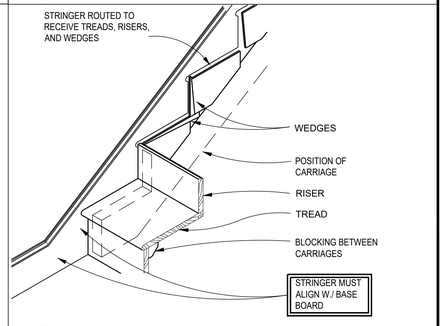

1 STAIR STRINGER
SCALE: 1"=1'-0"

REVIEWED
By Michael Kyne at 1:32 pm, May 23, 2022

APPROVED
Montgomery County
Historic Preservation Commission

GTM ARCHITECTS
7735 OLD GEORGETOWN ROAD
SUITE 700
BETHESDA, MD 20814
(240)333-2000
(240)333-2001 FAX
WWW.GTMARCHITECTS.COM

Seal

I certify that these documents were prepared or approved by me, and that I am a duly licensed architect under the laws of the State of Maryland. License number 6305, Expiration Date: 12-06-2022

Consultant

Project
25 High Street LOT 1
25 HIGH STREET, BROOKEVILLE, MD 20833

Owner

Developer

PERMIT SET	4-11-2022
Issue Description	*Date*

GTM Project No.	18.0320
Checked By	GTM
Drawn By	NW/KF
Scale	AS NOTED

Sheet Title
DETAILS

Sheet No.
A303

COPYRIGHT, 2019 GTM ARCHITECTS, INC.

FILE NAME:

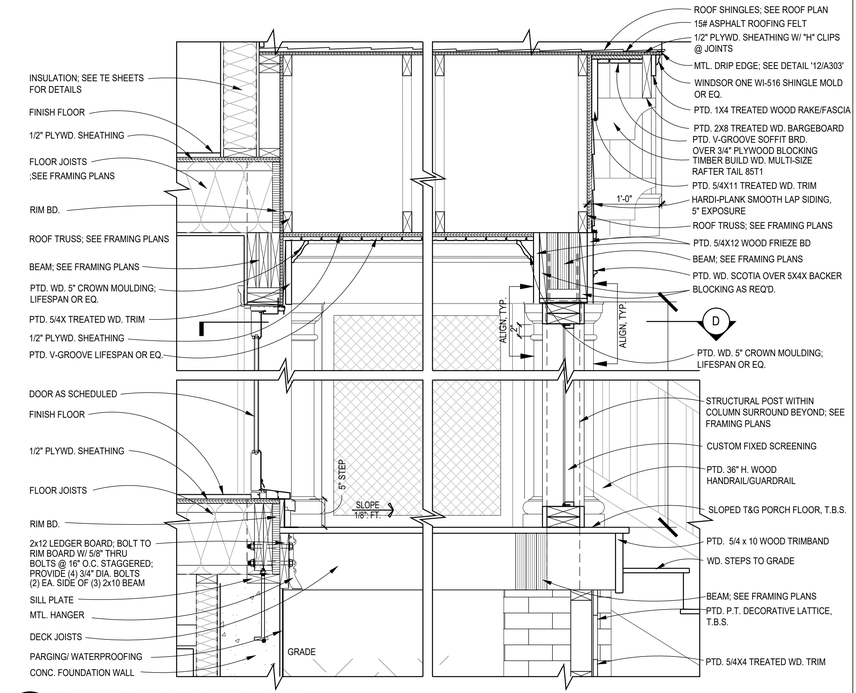

5 SCREENED IN PORCH DETAIL
SCALE: 1"=1'-0"

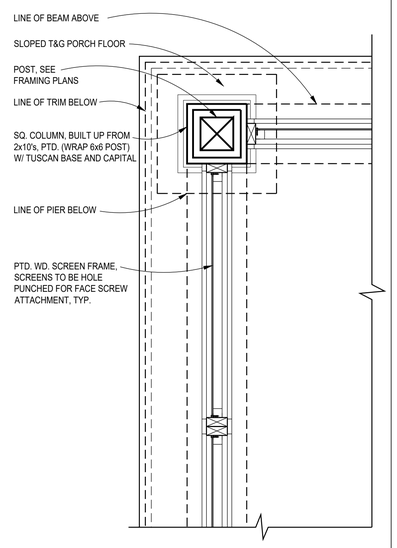

4 SCREENED IN PORCH PLAN DETAIL
SCALE: 1"=1'-0"

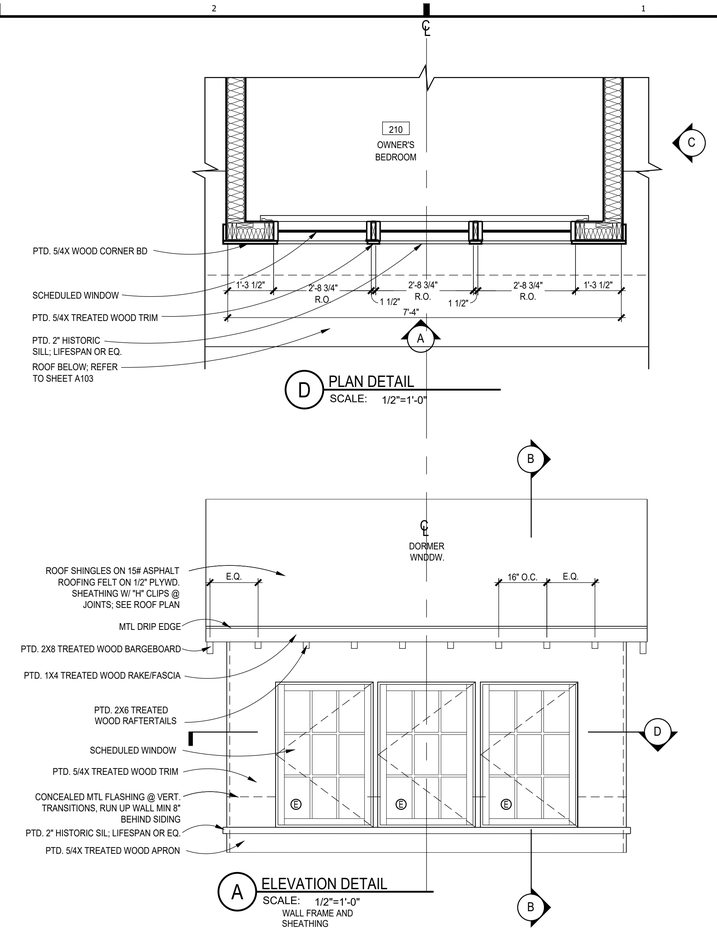

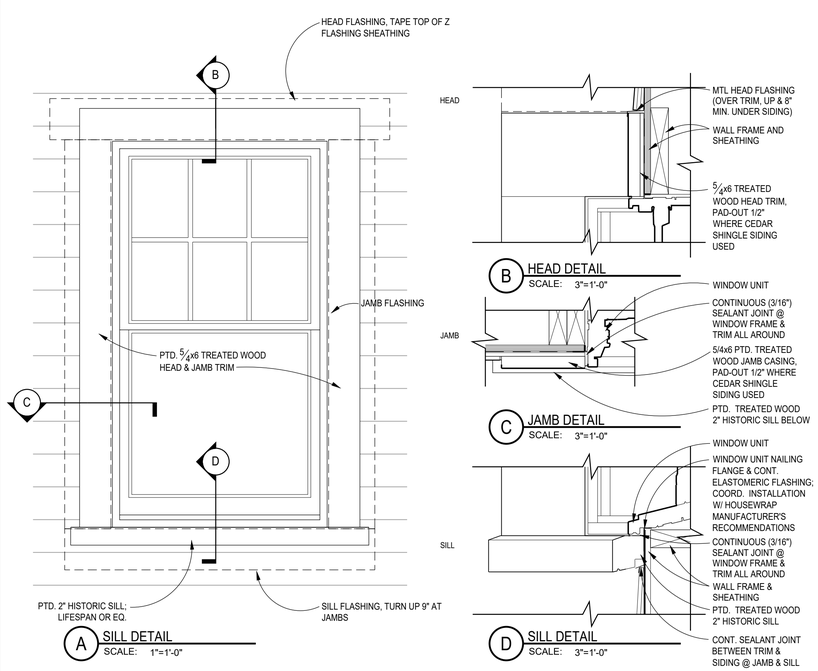

3 TYP. EXTERIOR WDW TRIM DETAILS
SCALE: 1"=1'-0"

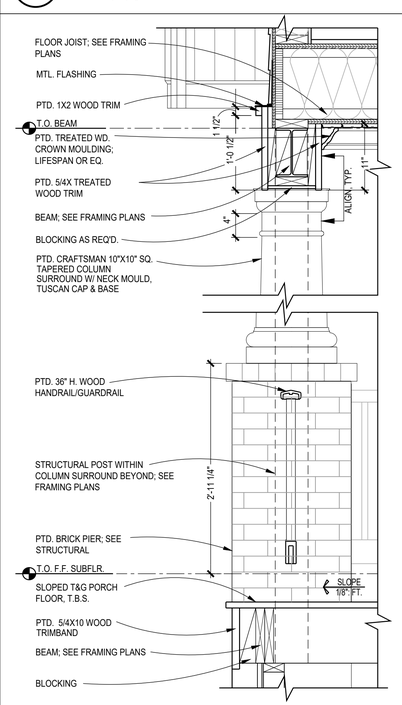

2 FRONT PORCH DETAIL
SCALE: 1"=1'-0"

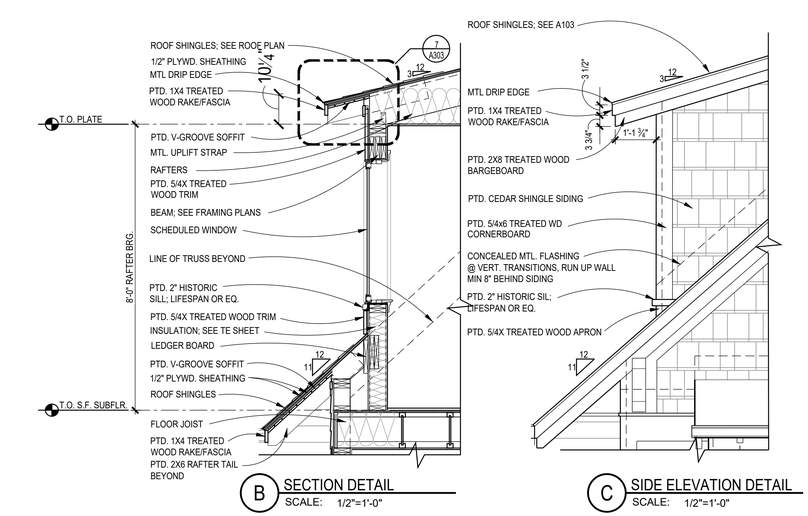

1 FRONT DORMER DETAILS
SCALE: AS NOTED

REVIEWED
By Michael Kyne at 1:32 pm, May 23, 2022

APPROVED
Montgomery County
Historic Preservation Commission

GTM ARCHITECTS
7735 OLD GEORGETOWN ROAD
SUITE 700
BETHESDA, MD 20814
(240)333-2000
(240)333-2001 FAX
WWW.GTMARCHITECTS.COM

Seal

I certify that these documents were prepared or approved by me, and that I am a duly licensed architect under the laws of the State of Maryland. License number 6385, Expiration Date: 12-06-2022.

Consultant

Project
25 High Street
LOT 1
25 HIGH STREET, BROOKEVILLE, MD 20833

Owner

Developer

PERMIT SET	4-11-2022
Issue Description	Date

GTM Project No.	18.0320
Checked By	GTM
Drawn By	NW/KF
Scale	AS NOTED

Sheet Title
DETAILS

Sheet No.
A304

COPYRIGHT, 2019 GTM ARCHITECTS, INC.

FILE NAME:

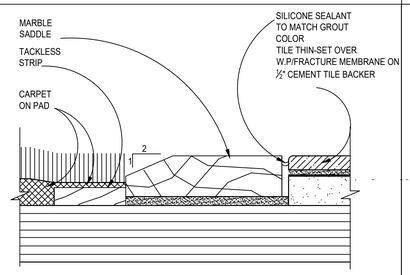

5 THRESHOLD DETAIL
SCALE: N.T.S.

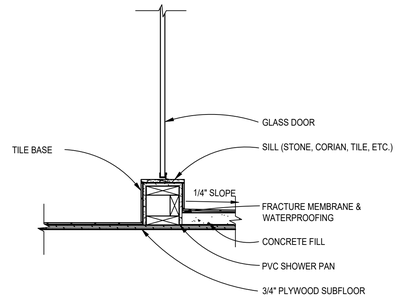

14 SECTION @ SHOWER CURB
SCALE: 1"=1'-0"

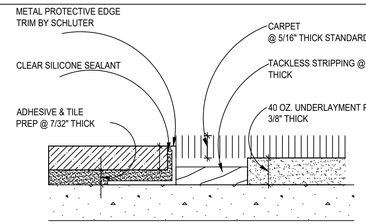

NOTE: TILE CONTRACTOR RESPONSIBLE TO ENGINEER FLUSH CONDITIONS WITH ALL DOOR OPENINGS AND CARPET INSETS, AND TO SUBMIT ANY DETAIL OR RAMPED THRESHOLDS TO GTM FOR APPROVAL. TILE CONTRACTOR RESPONSIBLE TO PREP AND INSTALL ALL TILE MATERIALS, AND TO KEEP PREMISES CLEAN DURING AND AFTER INSTALLATION. TILE CONTRACTOR RESPONSIBLE TO GROUT AND SEAL FINISHED INSTALLATION, AND SUBMIT COLORS FOR GROUTING MATERIALS TO GTM FOR APPROVAL, AND PROVIDE SPEC SHEETS ON SEALANTS, ALONG WITH MAINTENANCE SPECIFICATIONS.

4 TILE-TO-CARPET TRANSITION
SCALE: 12"=1'-0"

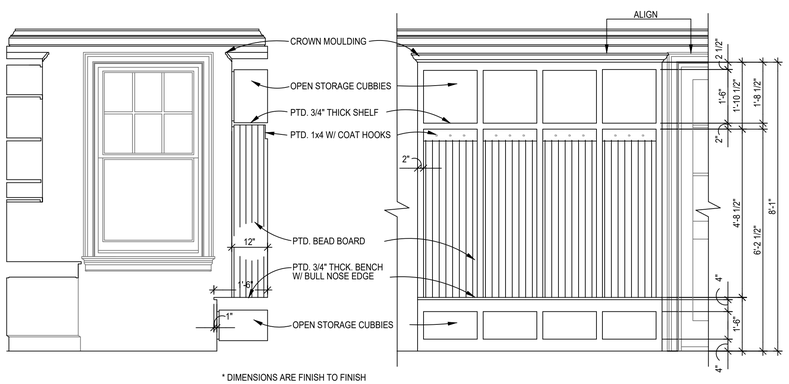

* DIMENSIONS ARE FINISH TO FINISH
* BUILT-IN TO BE FIELD BUILT FROM 1x & 1/2"-3/4" MDO PLYWD. W/ 1x EDGES

A MUD ROOM ELEVATION
SCALE: 1/2"=1'-0"

A MUD ROOM ELEVATION
SCALE: 1/2"=1'-0"

2 BENCH W/ LOCKERS, TYP.
SCALE: 1/2"=1'-0"

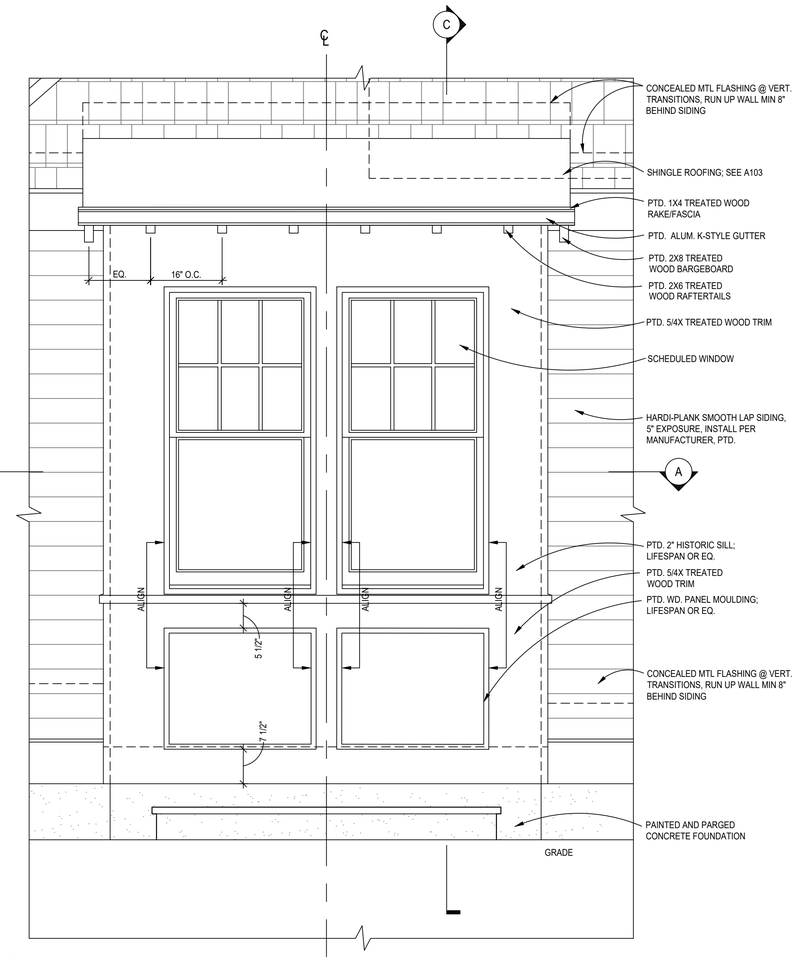

B FRONT ELEVATION
SCALE: 3/4"=1'-0"

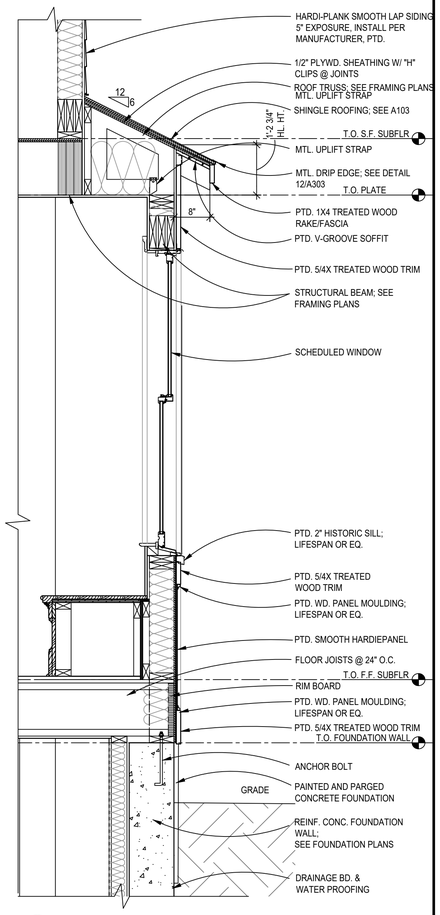

C BAY WINDOW SECTION
SCALE: 3/4"=1'-0"

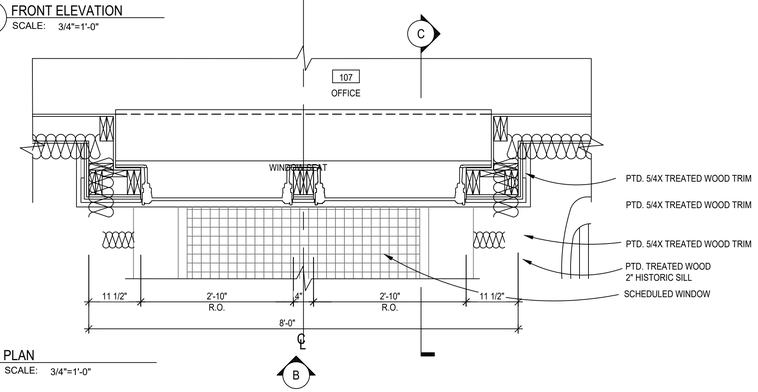

A PLAN
SCALE: 3/4"=1'-0"

1 BAY DETAILS
SCALE: AS NOTED

REVIEWED
By Michael Kyne at 1:37 pm, May 23, 2022

APPROVED
Montgomery County
Historic Preservation Commission

GTM ARCHITECTS
7735 OLD GEORGETOWN ROAD
SUITE 700
BETHESDA, MD 20814
(240)333-2000
(240)333-2001 FAX
WWW.GTMARCHITECTS.COM

Seal

I certify that these documents were prepared or approved by me, and that I am a duly licensed Architect under the laws of the State of Maryland, License No. 5305, Expiration Date: 12-06-2022.

Consultant

Project
25 High Street
LOT 1
25 HIGH STREET, BROOKEVILLE, MD 20833

Owner

Developer

Issue Description	Date
PERMIT SET	4-11-2022

GTM Project No.	18.0320
Checked By	GTM
Drawn By	NW/KF
Scale	AS NOTED

Sheet Title
DETAILS

Sheet No.
A305

COPYRIGHT, 2019 GTM ARCHITECTS, INC.

FILE NAME:

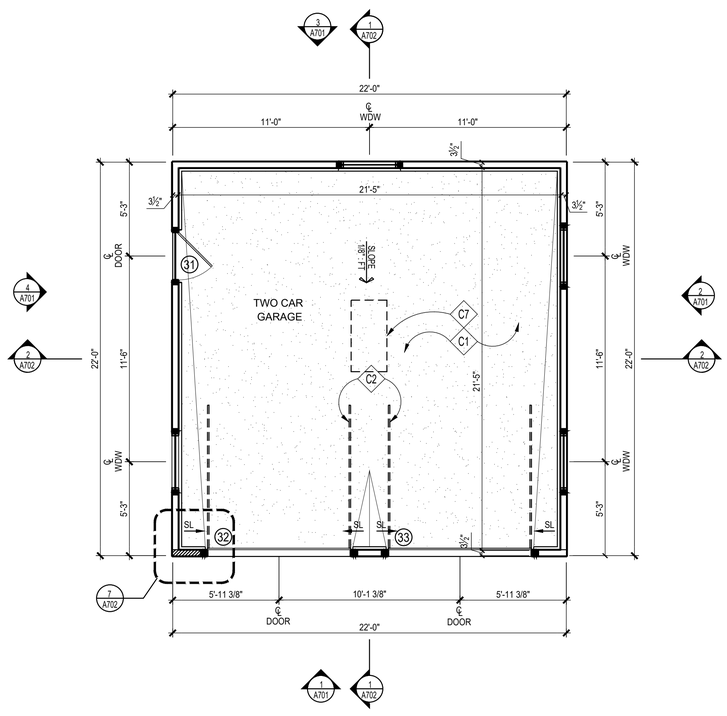

1 GARAGE PLAN
SCALE: 1/4"=1'-0"

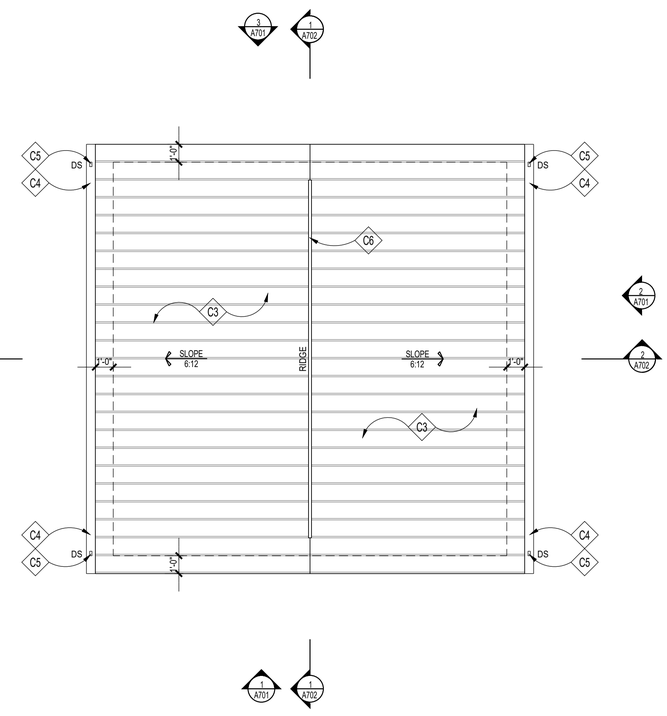

2 ROOF PLAN
SCALE: 1/4"=1'-0"

CONSTRUCTION NOTES

- C1 REINF. CONC. SLAB; SEE FOUNDATION PLAN
- C2 GARAGE DOOR TRACKS ABOVE
- C3 STANDING SEAM METAL ROOF, T.B.S.
- C4 GUTTER TO MATCH MAIN HOUSE
- C5 DOWNSPOUT TO MATCH MAIN HOUSE, TERMINATED IN PERFORATED PIPE; EXTEND BELOW GRADE; DRAIN TO DAYLIGHT OR SUMP PUMP
- C6 RIDGE/HIP VENTS BY COR-A-VENT OR APPROVED EQUAL
- C7 ATTIC ACCESS STAIR

ROOFING NOTES

1. MEMBRANE ROOF SHALL BE 60 MIL, WHITE PVC, ASTM D 4434, TYPE III, FABRIC REINFORCED. THE MEMBRANE SHALL BE ADHERED TO MECHANICALLY FASTENED, POLYISOCYANURATE BOARD INSULATION ASTM C 1289, FELT OR GLASS-FIBER MAT FACER ON BOTH MAJOR SURFACES. TAPERED INSULATION SHALL BE FACTORY-MADE TO A MINIMUM SLOPE OF 1/4" PER FOOT. INSULATION SHALL BE INSTALLED IN TWO LAYERS WITH JOINTS STAGGERED.
2. PROVIDE FLASHING FOR MIN. 8" EACH SIDE OF ALL VALLEYS & PITCH CHANGES

WALL TYPES

TYPICAL EXTERIOR WALL: 2x4 WOOD STUDS 16" O.C. W/ VAPOR BARRIER, 1/2" OSB SHEATHING.

GENERAL NOTES

1. REFER TO THE ARCH DWGS FOR DIMENSIONS, ELEVATIONS, AND BALANCE OF INFORMATION. REFER TO MEP DWGS FOR ADD'L INFO ON DRAINGS, UTILITY LINES, SLEEVES & OPENING REQ'S.
2. REFER TO SN.1 FOR STRUCTURAL NOTES. REFER TO SD.1, SD.2, SD.3, SD.4 & WB.1 FOR APPLICABLE DETAILS NOT REFERENCED ON PLANS.
3. PROVIDE SOLID BLOCKING BETWEEN FLOORS UNDER ALL WOOD POSTS ALL THE WAY DOWN TO TOP OF BEAMS & CONC WALLS. PROVIDE 2x6 SQUASH BLOCKING EA. SIDE OF TJI JOISTS AT STACKED LOAD BEARING WALLS, INSTALL PER TJI. MANUF. PROVIDE INTERMEDIATE HORIZONTAL BLKG. STUDS AT 4'-0" VERTICAL SPACING AT ALL LOAD BEARING WALLS.
4. IN ADDITION TO POSTS SHOWN ON PLAN PROVIDE THE FOLLOWING:
   ADD'L (1) KING STUD EACH SIDE OF OPNGS UP TO 4'-0" WIDE.
   ADD'L (2) KING STUD EACH SIDE OF OPNGS UP TO 8'-0" WIDE.
5. PROVIDE FRAMING CONNECTORS FOR JOISTS, BEAMS & POSTS. CONNECTORS SHALL BE BY SIMPSON STRONG-TIE OR EQ. AND SHALL BE PROPERLY SIZED ACCORDING TO MEMBER SIZES, AND INSTALLED ACCORDING TO MANUFACTURER. PROVIDE SIMPSON H2.5A UPLIFT CONNECTORS AT ALL RAFTERS. PROVIDE ST2215 STRAPS CONNECTING TOP OF SHEARWALLS TO HEADERS.
6. INSTALL CHIMNEY ANCHORAGE STRAPS PER IRC 2012 EDITION.
7. REFER TO WB.1 FOR WALL BRACING PANEL CONSTRUCTION INFORMATION & TYP. DETAILS

REVIEWED
By Michael Kyne at 1:32 pm, May 23, 2022

APPROVED
Montgomery County
Historic Preservation Commission

GTM ARCHITECTS

7735 OLD GEORGETOWN ROAD
SUITE 700
BETHESDA, MD 20814
(240)333-2000
(240)333-2001 FAX
WWW.GTMARCHITECTS.COM

Seal

Consultant

Project
25 High Street
LOT 1
25 HIGH STREET, BROOKEVILLE, MD 20833

Owner

Developer

PERMIT SET	4-11-2022

Issue Description	*Date*

GTM Project No.	18.0320
Checked By	GTM
Drawn By	NW/KF
Scale	AS NOTED

Sheet Title
GARAGE PLANS

Sheet No.
A700

COPYRIGHT, 2019 GTM ARCHITECTS, INC.

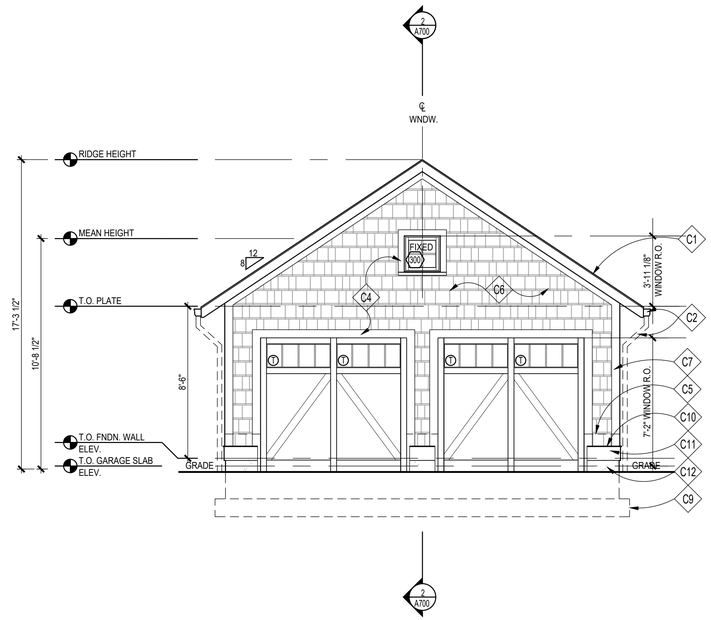

1 FRONT ELEVATION

SCALE: 1/4"=1'-0"

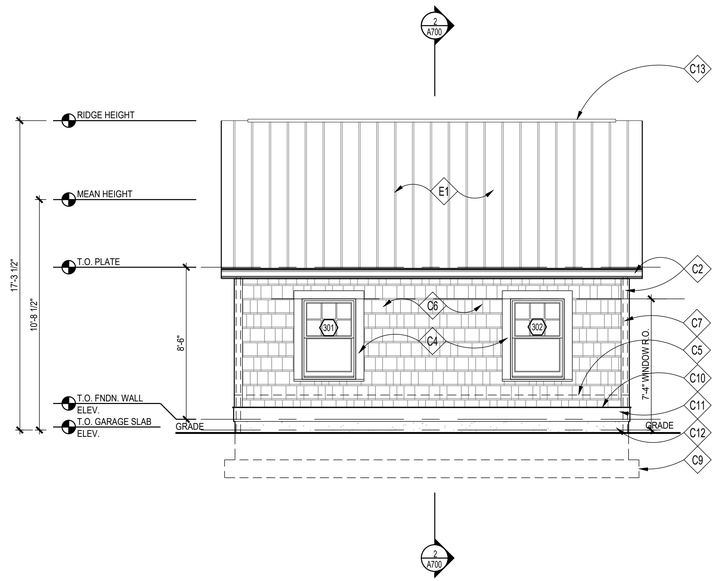

2 RIGHT SIDE ELEVATION

SCALE: 1/4"=1'-0"

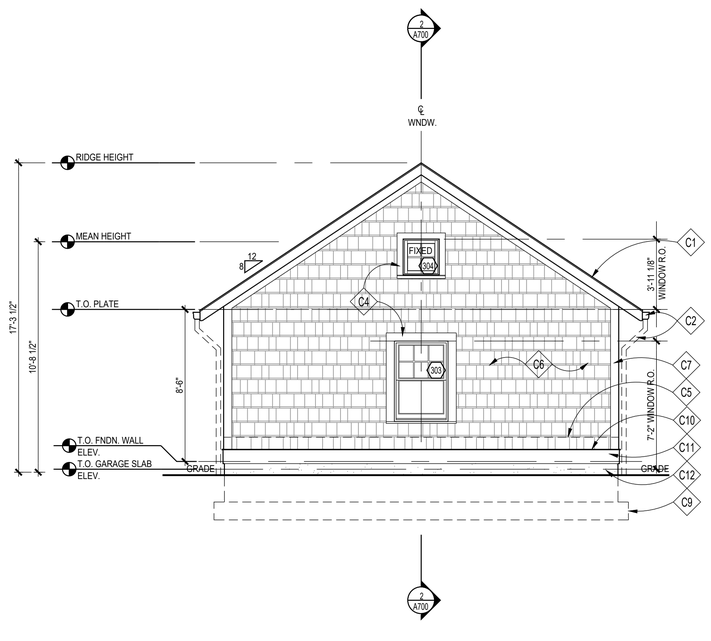

3 REAR ELEVATION

SCALE: 1/4"=1'-0"

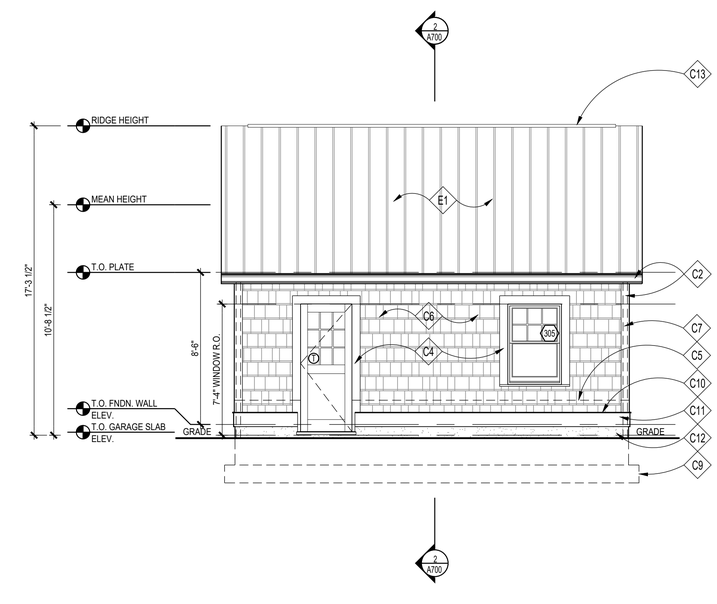

4 LEFT SIDE ELEVATION

SCALE: 1/4"=1'-0"

CONSTRUCTION NOTES

- C1 STANDING SEAM METAL ROOF, T.B.S.
- C2 PTD. ALUM. K-STYLE GUTTER & DOWNSPOUTS TO MATCH MAIN HOUSE, TERMINATED IN PERFORATED PIPE; EXTEND BELOW GRADE; DRAIN TO DAYLIGHT OR SUMP PUMP
- C3
- C4 PTD. 5/4X6 WOOD HEAD & JAMB TRIM W/ HISTORIC SILL
- C5 CONCEALED FLASHING, TYP.
- C6 PTD./STD. CEDAR SHINGLE SIDINGS W/ 6" REVEAL
- C7 PTD. 5/4x6 WD. CORNERBOARD
- C8 PTD. 1X4 WOOD RAKE/FASCIA
- C9 DASHED LINE INDICATES FOOTING BELOW GRADE
- C10 PTD. SLOPED 1X WOOD DRIP CAP, SEE 13/A303 FOR DETAIL
- C11 PTD. 5/4x10 WOOD TRIMBAND
- C12 PARGED & PTD. CONC. FOUNDATION WALL WHERE EXPOSED
- C13 RIDGE VENTS BY COR-A-VENT OR APPROVED EQUAL, TYP.; OMIT IF USING SPRAY FOAM INSULATION, SEE DETAIL '8/A303'

ROOFING NOTES

1. MEMBRANE ROOF SHALL BE 60 MIL, WHITE PVC, ASTM D 4434, TYPE III, FABRIC REINFORCED. THE MEMBRANE SHALL BE ADHERED TO MECHANICALLY FASTENED, POLYISOCYANURATE BOARD INSULATION ASTM C 1289, FELT OR GLASS-FIBER MAT FACER ON BOTH MAJOR SURFACES. TAPERED INSULATION SHALL BE FACTORY-MADE TO A MINIMUM SLOPE OF 1/4" PER FOOT. INSULATION SHALL BE INSTALLED IN TWO LAYERS WITH JOINTS STAGGERED.
2. PROVIDE FLASHING FOR MIN. 8" EACH SIDE OF ALL VALLEYS & PITCH CHANGES

WALL TYPES

TYPICAL EXTERIOR WALL: 2x4 WOOD STUDS 16" O.C. W/ VAPOR BARRIER, 1/2" OSB SHEATHING.

E28

GENERAL NOTES

1. REFER TO THE ARCH DWGS FOR DIMENSIONS, ELEVATIONS, AND BALANCE OF INFORMATION. REFER TO MEP DWGS FOR ADD'L INFO ON DRAINGS, UTILITY LINES, SLEEVES & OPENING REQ'S.
2. REFER TO SN.1 FOR STRUCTURAL NOTES. REFER TO SD.1, SD.2, SD.3, SD.4 & WB.1 FOR APPLICABLE DETAILS NOT REFERENCED ON PLANS.
3. PROVIDE SOLID BLOCKING BETWEEN FLOORS UNDER ALL WOOD POSTS ALL THE WAY DOWN TO TOP OF BEAMS & CONC WALLS. PROVIDE 2x6 SQUASH BLOCKING EA. SIDE OF TJI JOISTS AT STACKED LOAD BEARING WALLS, INSTALL PER TJI. MANUF. PROVIDE INTERMEDIATE HORIZONTAL BLKG. STUDS AT 4'-0" VERTICAL SPACING AT ALL LOAD BEARING WALLS.
4. IN ADDITION TO POSTS SHOWN ON PLAN PROVIDE THE FOLLOWING:
   ADD'L (1) KING STUD EACH SIDE OF OPNGS UP TO 4'-0" WIDE.
   ADD'L (2) KING STUD EACH SIDE OF OPNGS UP TO 8'-0" WIDE.
5. PROVIDE FRAMING CONNECTORS FOR JOISTS, BEAMS & POSTS. CONNECTORS SHALL BE BY SIMPSON STRONG-TIE OR EQ. AND SHALL BE PROPERLY SIZED ACCORDING TO MEMBER SIZES, AND INSTALLED ACCORDING TO MANUFACTURER. PROVIDE SIMPSON H2.5A UPLIFT CONNECTORS AT ALL RAFTERS. PROVIDE ST2215 STRAPS CONNECTING TOP OF SHEARWALLS TO HEADERS.
6. INSTALL CHIMNEY ANCHORAGE STRAPS PER IRC 2012 EDITION.
7. REFER TO WB.1 FOR WALL BRACING PANEL CONSTRUCTION INFORMATION & TYP. DETAILS

REVIEWED
By Michael Kyne at 1:32 pm, May 23, 2022

APPROVED
Montgomery County
Historic Preservation Commission

GTM ARCHITECTS

7735 OLD GEORGETOWN ROAD
SUITE 700
BETHESDA, MD 20814
(240)333-2000
(240)333-2001 FAX
WWW.GTMARCHITECTS.COM

Seal

STATE OF MARYLAND — MICHAEL JOHN KYNE — 12345 — ARCHITECT

I certify that these documents were prepared or approved by me, and that I am a duly licensed architect under the laws of the State of Maryland, license number 5686, Expiration Date: 12/06/2022.

Consultant

Project
25 High Street
LOT 1
25 HIGH STREET, BROOKEVILLE, MD 20833

Owner

Developer

Issue Description	*Date*
PERMIT SET	4-11-2022

GTM Project No.	18.0320
Checked By	GTM
Drawn By	NW/KF
Scale	AS NOTED

Sheet Title

GARAGE ELEVATIONS

Sheet No.

A701

COPYRIGHT, 2019 GTM ARCHITECTS, INC.

FILE NAME:

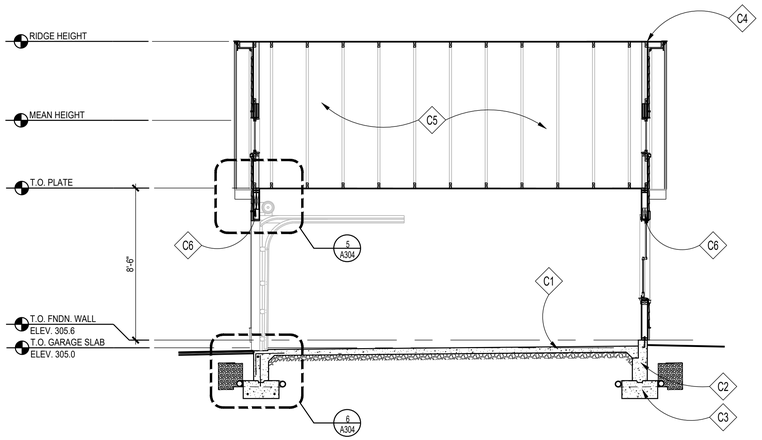

1 BUILDING SECTION
SCALE: 1/4"=1'-0"

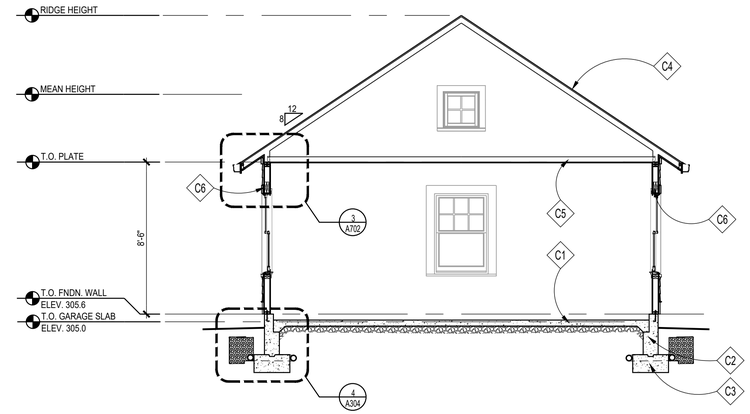

2 BUILDING SECTION
SCALE: 1/4"=1'-0"

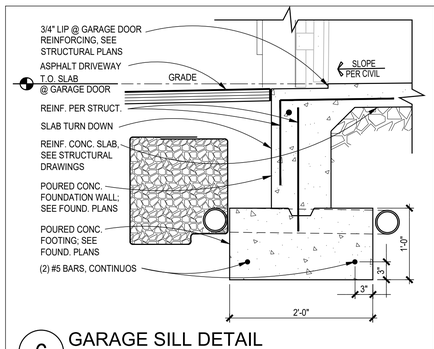

6 GARAGE SILL DETAIL
SCALE: 1" = 1'-0"

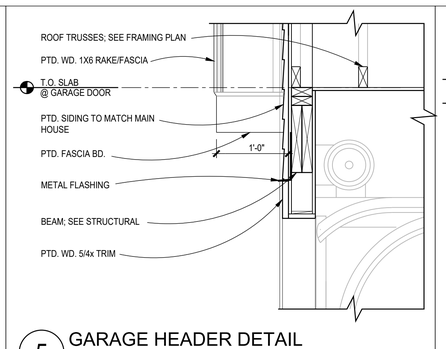

5 GARAGE HEADER DETAIL
SCALE: 1" = 1'-0"

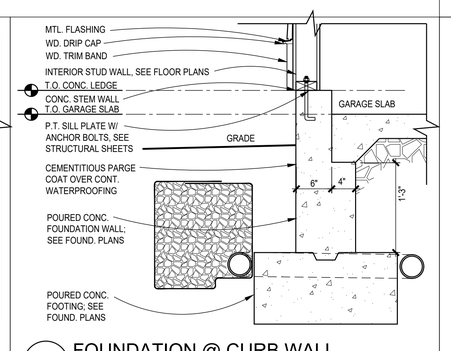

4 FOUNDATION @ CURB WALL
SCALE: 1" = 1'-0"

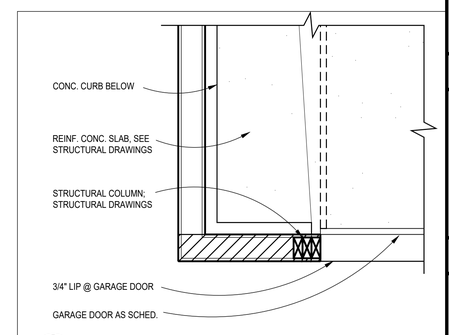

7 GARAGE SILL DETAIL
SCALE: 1" = 1'-0"

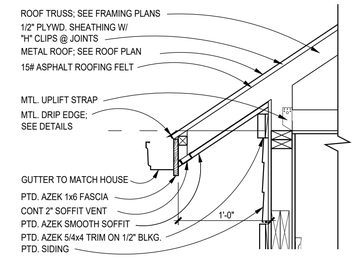

3 GARAGE SOFFIT DETAIL
SCALE: 1" = 1'-0"

(1X1)

SECTION NOTES

- C1 REINF. CONC. SLAB; SEE FOUNDATION PLAN
- C2 CONCRETE FOUNDATION WALL; SEE FOUNDATION PLAN
- C3 FOOTING; SEE FOUNDATION PLAN
- C4 SEE NOTE #1 UNDER GENERAL ROOFING NOTES, TYP.
- C5 TRUSSES; SEE FRAMING PLAN
- C6 BEAM/ LINTEL/ HEADER; SEE FRAMING PLANS

ROOFING NOTES

1. MEMBRANE ROOF SHALL BE 60 MIL, WHITE PVC, ASTM D 4434, TYPE III, FABRIC REINFORCED. THE MEMBRANE SHALL BE ADHERED TO MECHANICALLY FASTENED, POLYISOCYANURATE BOARD INSULATION ASTM C 1289, FELT OR GLASS-FIBER MAT FACER ON BOTH MAJOR SURFACES. TAPERED INSULATION SHALL BE FACTORY-MADE TO A MINIMUM SLOPE OF 1/4" PER FOOT. INSULATION SHALL BE INSTALLED IN TWO LAYERS WITH JOINTS STAGGERED.
2. PROVIDE FLASHING FOR MIN. 8" EACH SIDE OF ALL VALLEYS & PITCH CHANGES

WALL TYPES

TYPICAL EXTERIOR WALL: 2x4 WOOD STUDS 16" O.C. W/ VAPOR BARRIER, 1/2" OSB SHEATHING.

GENERAL NOTES

1. REFER TO THE ARCH DWGS FOR DIMENSIONS, ELEVATIONS, AND BALANCE OF INFORMATION. REFER TO MEP DWGS FOR ADD'L INFO ON DRAINGS, UTILITY LINES, SLEEVES & OPENING REQ'S.
2. REFER TO SN.1 FOR STRUCTURAL NOTES. REFER TO SD.1, SD.2, SD.3, SD.4 & WB.1 FOR APPLICABLE DETAILS NOT REFERENCED ON PLANS.
3. PROVIDE SOLID BLOCKING BETWEEN FLOORS UNDER ALL WOOD POSTS ALL THE WAY DOWN TO TOP OF BEAMS & CONC WALLS. PROVIDE 2x6 SQUASH BLOCKING EA. SIDE OF TJI JOISTS AT STACKED LOAD BEARING WALLS, INSTALL PER TJI. MANUF. PROVIDE INTERMEDIATE HORIZONTAL BLKG. STUDS AT 4'-0" VERTICAL SPACING AT ALL LOAD BEARING WALLS.
4. IN ADDITION TO POSTS SHOWN ON PLAN PROVIDE THE FOLLOWING: ADD'L (1) KING STUD EACH SIDE OF OPNGS UP TO 4'-0" WIDE. ADD'L (2) KING STUD EACH SIDE OF OPNGS UP TO 8'-0" WIDE.
5. PROVIDE FRAMING CONNECTORS FOR JOISTS, BEAMS & POSTS. CONNECTORS SHALL BE BY SIMPSON STRONG-TIE OR EQ. AND SHALL BE PROPERLY SIZED ACCORDING TO MEMBER SIZES, AND INSTALLED ACCORDING TO MANUFACTURER. PROVIDE SIMPSON H2.5A UPLIFT CONNECTORS AT ALL RAFTERS. PROVIDE ST2215 STRAPS CONNECTING TOP OF SHEARWALLS TO HEADERS.
6. INSTALL CHIMNEY ANCHORAGE STRAPS PER IRC 2012 EDITION.
7. REFER TO WB.1 FOR WALL BRACING PANEL CONSTRUCTION INFORMATION & TYP. DETAILS

REVIEWED
By Michael Kyne at 1:32 pm, May 23, 2022

APPROVED
Montgomery County
Historic Preservation Commission

GTM ARCHITECTS

7735 OLD GEORGETOWN ROAD
SUITE 700
BETHESDA, MD 20814
(240)333-2000
(240)333-2001 FAX
WWW.GTMARCHITECTS.COM

Seal

STATE OF MARYLAND
ARCHITECT

I certify that these documents were prepared or approved by me, and that I am a duly licensed architect under the laws of the State of Maryland, license number 5886, Expiration Date 12/06/2022.

Consultant

Project
25 High Street
LOT 1
25 HIGH STREET, BROOKEVILLE, MD 20833

Owner

Developer

Issue Description	*Date*
PERMIT SET	4-11-2022

GTM Project No.	18.0320
Checked By	GTM
Drawn By	NW/KF
Scale	AS NOTED

Sheet Title
GARAGE SECTIONS/ DETAILS

Sheet No.
A702

COPYRIGHT, 2019 GTM ARCHITECTS, INC.

FILE NAME:

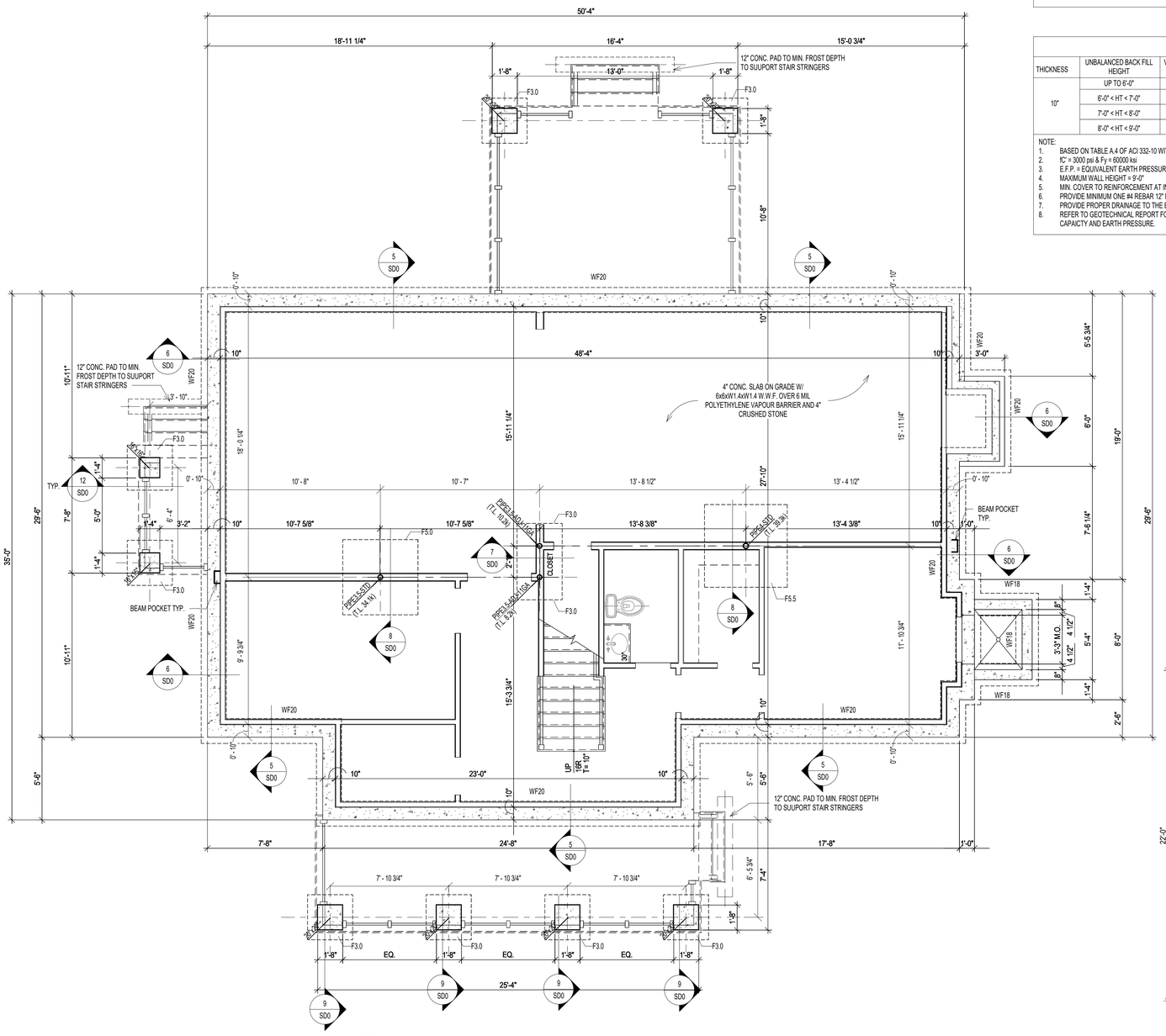

1 FOUNDATION PLAN
S0 SCALE: 1/4" = 1'-0"

BASEMENT FOUNDATION WALL SCHEDULE (MAX. UNSPPORTED HEIGHT = 9'-0")					
THICKNESS	UNBALANCED BACK FILL HEIGHT	VERTICAL REBARS (E.F.P. = 30 PSF/FT)	VERTICAL REBARS (E.F.P. = 45 PSF/FT)	VERTICAL REBARS (E.F.P. = 60 PSF/FT)	HORIZONTAL REBARS
8"	UP TO 5'-0"	NOT REQD.	NOT REQD.	NOT REQUIRED	#4 @ 24" O.C.
	5'-0" < HT < 6'-0"	NOT REQD.	NOT REQD.	#5 @ 36" O.C.	
	6'-0" < HT < 7'-0"	NOT REQD.	#5 @ 36" O.C.	#5 @ 24" O.C.	
	7'-0" < HT < 8'-0"	#4 @ 24" O.C.	#5 @ 24" O.C.	#5 @ 20" O.C.	
	8'-0" < HT < 9'-0"	#4 @ 18" O.C.	#5 @ 20" O.C.	#5 @ 16" O.C.	

NOTE:
1. BASED ON TABLE 3.12 OF PCA-100 "PRESCRIPTIVE DESIGN OF EXTERIOR CONCRETE WALLS" WITH FOLLOWING CRITERIA
2. f'C' = 3000 psi & Fy = 60000 ksi
3. E.F.P. = EQUIVALENT EARTH PRESSURE
4. MAXIMUM WALL HEIGHT = 9'-0"
5. MIN. COVER TO REINFORCEMENT AT INSIDE FACE = 3/4" & MIN. COVER TO REINFORCEMENT AT OUTSIDE FACE = 1 1/2"
6. PROVIDE MINIMUM ONE #4 REBAR 12" FROM TOP & BOTTOM.
7. PROVIDE PROPER DRAINAGE TO THE BACKFILL REFER TO ARCHITECTURAL DRAWINGS FOR DRAINAGE AND WATEPROOFING
8. REFER TO GEOTECHNICAL REPORT FOR ALL FURTHER RECOMMENDATIONS. GEOTECHNICAL ENGINEER TO VERIFY FOUNDATION DESIGN CRITERIA FOR SOIL BEARING CAPACITY AND EARTH PRESSURE.
9. REBARS CAN BE SUBSTITUTED WITH #4 REBARS TO MATCH SPECIFIED AREA OF REINFORCEMENT IN ABOVE TABLE

BASEMENT FOUNDATION WALL SCHEDULE (MAX. UNSPPORTED HEIGHT = 9'-0")					
THICKNESS	UNBALANCED BACK FILL HEIGHT	VERTICAL REBARS (E.F.P. = 30 PSF/FT)	VERTICAL REBARS (E.F.P. = 45 PSF/FT)	VERTICAL REBARS (E.F.P. = 60 PSF/FT)	HORIZONTAL REBARS
10"	UP TO 6'-0"	NOT REQD.	NOT REQD.	NOT REQD.	#4 @ 24" O.C.
	6'-0" < HT < 7'-0"	NOT REQD.	NOT REQD.	#4 @ 24" O.C.	
	7'-0" < HT < 8'-0"	NOT REQD.	#4 @ 18" O.C.	#4 @ 16" O.C.	
	8'-0" < HT < 9'-0"	NOT REQD.	#4 @ 16" O.C.	#4 @ 12" O.C.	

NOTE:
1. BASED ON TABLE A.4 OF ACI 332-10 WITH FOLLOWING CRITERIA
2. f'C' = 3000 psi & Fy = 60000 ksi
3. E.F.P. = EQUIVALENT EARTH PRESSURE
4. MAXIMUM WALL HEIGHT = 9'-0"
5. MIN. COVER TO REINFORCEMENT AT INSIDE FACE = 3/4" & MIN. COVER TO REINFORCEMENT AT OUTSIDE FACE = 1 1/2"
6. PROVIDE MINIMUM ONE #4 REBAR 12" FROM TOP & BOTTOM.
7. PROVIDE PROPER DRAINAGE TO THE BACKFILL REFER TO ARCHITECTURAL DRAWINGS FOR DRAINAGE AND WATEPROOFING
8. REFER TO GEOTECHNICAL REPORT FOR ALL FURTHER RECOMMENDATIONS. GEOTECHNICAL ENGINEER TO VERIFY FOUNDATION DESIGN CRITERIA FOR SOIL BEARING CAPACITY AND EARTH PRESSURE.

LEGENDS:

TS = THICKENED SLAB
WF = WALL FOOTING
F = FOOTING

FOUNDATION NOTES:

1. FOUNDATION DESIGN IS BASED ON ASSUMED DESIGN CRITERIA AS SPECIFIED ON GENERAL NOTES SHEET. AND SHALL BE FIELD VERIFIED BY GEOTECHNICAL ENGINEER. NOTIFY ENGINEER IF ANY DESCRIPANCIES ARE FOUND OR CRITERIA DIFFERS FROM ASSUMED CRITERIA.
2. VERIFY AND COORDINATE ALL DIMENSIONS WITH ARCHITECTURAL AND CIVIL DRAWINGS. NOTIFY ENGINEER IF ANY COORDINATION IS REQUIRED.
3. BASEMENT SLAB SHALL BE 4" CONC. SLAB ON GRADE WITH 6x6xW1.4xW1.4 W.W.F U.N.O.
4. ALL EXTERIOR FOOTINGS SHALL BE LOWERED TO MINIMUM FROST DEPTH AS REQUIRED BY LOCAL JURISDICTIONS.
5. PROVIDE MIN. 3'-0"x3'-0"x12" CONC. FOOTING W/ #5 @ 12" O.C. BOTT. EA. WAY. UNDER EACH POST UNLESS NOTED OTHERWISE ON FOUDATION PLAN.
6. PROVIDE MIN. 16"x12" CONC. THICKENED SLAB UNDER BEARING WALLS UNLESS NOTED OTHERWISE.
7. PROVIDE MIN. 24"x8" CONC. WALL FOOTING W/ MIN. (2) #4 CONT. AT BOTT. UNDER ALL FOUNDATION WALLS UNLESS NOTED OTHERWISE.
8. PROVIDE WATERPROOFING, DAMP PROOFING PER APPLICABLE CODES AT FOUNDATION WALL, FOOTINGS AND SLABS.
9. INSTALL CONTINUOUS 4"Ø PERFORATED DRAIN PIPES ON EACH SIDE OF FOOTING. CONNECTED WITH 1 1/2"Ø WEEP HOLES @ 8'-0" O.C. AND DRAIN TO SUMP PUMP OR DAY LIGHT.

PLAN LEGENDS & SYMBOLS:

- INDICATES BEARING WALL
- INDICATES DRAIN HOLE FROM ABOVE
- INDICATES JOIST/TRUSS HANEGR (REFER TO SHOP DWGS)
- INDICATES FRAMING DIRECTION
- INDICATES REBAR DIRECTION
- (_J+_S) — INDICATES NO. OF KING STUDS AT EACH END; INDICATES NO. OF JACK STUDS AT EACH END
- WF?? — INDICATES WALL FOOTING; WIDTH OF WALL FOOTING IN INCHES
- TS?? — INDICATES THICKENED SLAB; WIDTH OF THICKENED SLAB IN INCHES
- F.x.x — INDICATES ISOLATED COLUMN FOOTING; INDICATES SIZE OF FOOTING IN DECIMAL FEET
- ML?? — MICROLAM LVL 2.0E; DEPTH OF MICROLAM LVL IN INCHES
- LSL?? — LAMINATED STRAND LUMBER 1.7E; DEPTH OF TIMBERSTAND LSL BEAM IN INCHES
- PSL?? — PARALLAM STRAND LUMBER 2.0E; WIDTHxDEPTH OF MEMBER
- CC — COLUMN CAP
- CB — COLUMN BASE
- HD — HOLD DOWN ANCHOR
- MS — METAL STRAP
- H — JOIST/TRUSS/BEAM HANGER
- HC — HURRICANE CLIPS

WALL FOOTING SCHEDULE	
MARK	DESCRIPTION
WF18	18" x 8" CONC. FTG. W/ (2) #4 CONT. @ BOTT.
WF20	20" x 8" CONC. FTG. W/ (2) #4 CONT. @ BOTT.

STEEL COLUMN SCHEDULE	
MARK	DESCRIPTION
PIPE3-STD	3" Ø STANDARD STEEL PIPE COLUMN
PIPE3.5-ADJ-11GA	3.50"Ø x 11GA. ADJUSTABLE STEEL PIPE COLUMN
PIPE3.5-STD	3 1/2"Ø STANDARD STEEL PIPE COLUMN
PIPE4-STD	4"Ø STANDARD STEEL PIPE COLUMN

COLUMN FOOTING SCHEDULE	
MARK	DESCRIPTION
F3.0	3'-0" x 3'-0" x 12" CONC. FTG W/ #4 @ 12" O.C. BOTT. EA. WAY
F5.0	5'-0" x 5'-0" x 12" CONC. FTG W/ #5 @ 12" O.C. BOTT. EA. WAY
F5.5	5'-6" x 5'-6" x 12" CONC. FTG W/ #5 @ 12" O.C. BOTT. EA. WAY

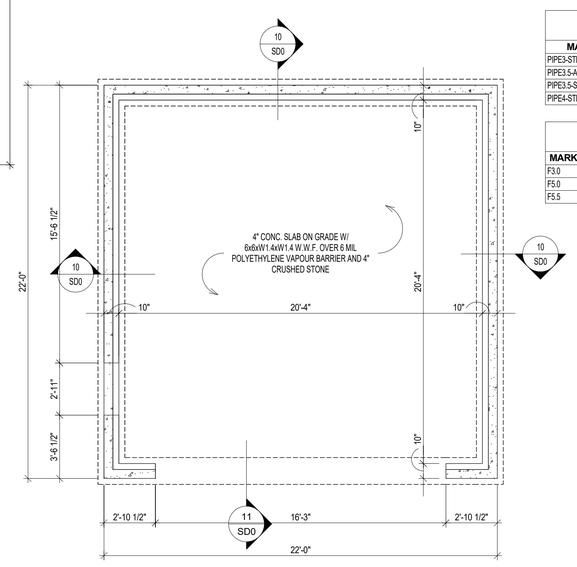

4 FOUNDATION PLAN @ GARAGE
S0 SCALE: 1/4" = 1'-0"

REVIEWED
By Michael Kyne at 1:37 pm, May 23, 2022

APPROVED
Montgomery County
Historic Preservation Commission

© COPYRIGHT 2016
Structural Engineering content of this drawings are property of structBIM LLC and are issued for this project only. Any re-use or re-production of these drawings shall not be done without written consent of structBIM LLC. These drawings are to be read in conjuction with project specifications and drawings from other consultants. These drawings shall not be used as shop drawings. Do not scale drawings, use dimensions as specified.

GTM ARCHITECTS

7735 OLD GEORGETOWN ROAD
SUITE 700
BETHESDA, MD 20814
(240)333-2000
(240)333-2001 FAX
WWW.GTMARCHITECTS.COM

Seal

STATE OF MARYLAND — MICHAEL KANE — 40082 — PROFESSIONAL ENGINEER

Consultant

structBIM ENGINEERS
WE DESIGN....WE BIM
46400 BENEDICT DR, SUITE #211
PHONE: 703-657-4481
E-MAIL: info@structBIM.com

Project

19 HIGH STREET, LOT 1
BROOKVILLE, MD 20833

I certify that these documents were prepared or approved by me, and that I am a duly licensed Professional Engineer under the laws of the State of Maryland, license number 40082, Expiration Date: 02-13-2023.

Issue Description	*Date*

structBIM Project No.	21-0243
Checked By	KK
Drawn By	KK
Scale	1/4" = 1'-0"

Sheet Title

FOUNDATION PLAN

Sheet No.

S0

COPYRIGHT, 2016 structBIMEngineers, LLC.

PLOTTED ON: 4/19/2022 12:45:21 PM

FILE NAME:

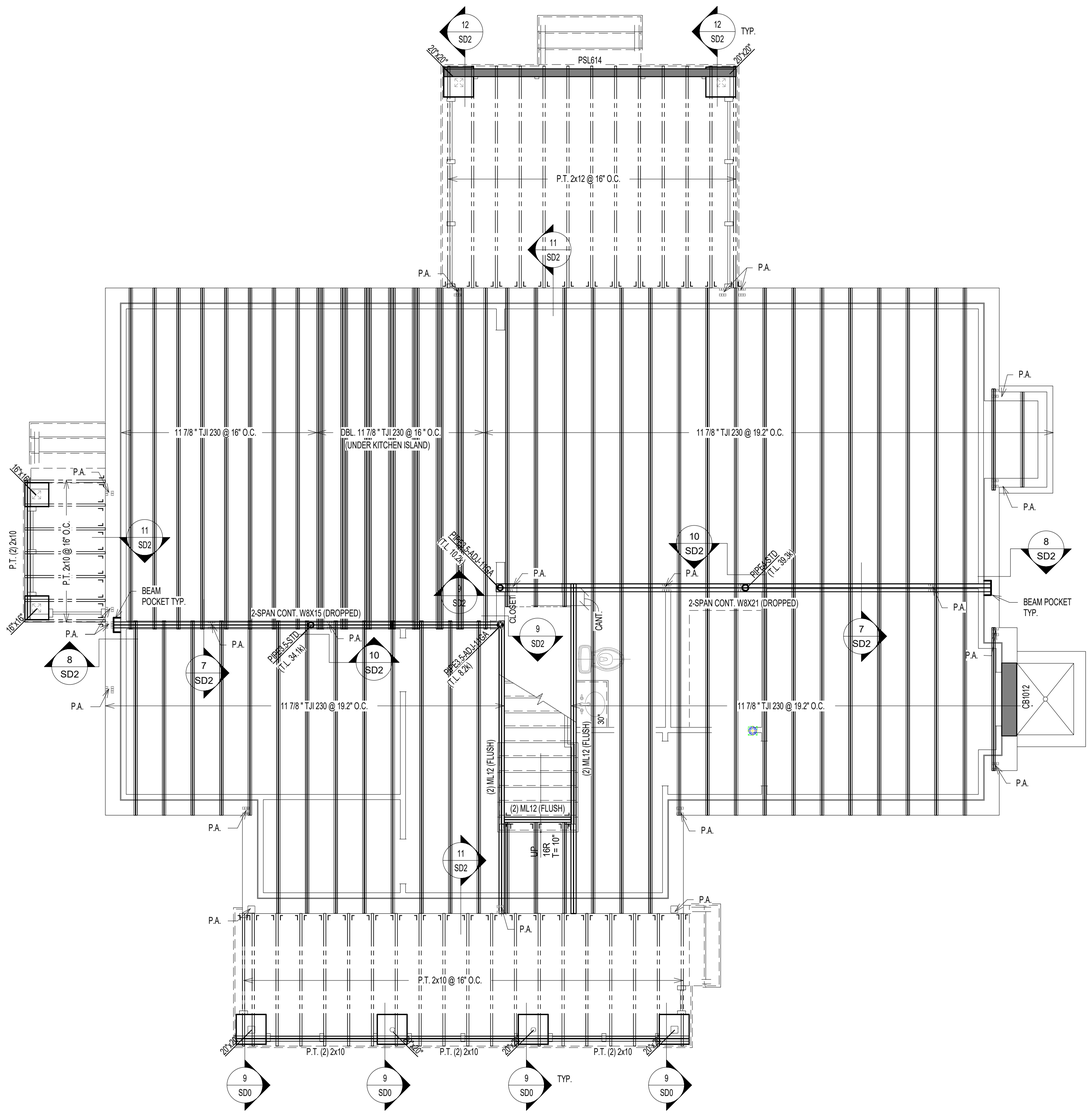

1 / S1 FIRST FLOOR FRAMING PLAN
SCALE: 1/4" = 1'-0"

2 / S1 FIRST FLOOR FRAMING PLAN @ GARAGE
SCALE: 1/4" = 1'-0"

REVIEWED
By Michael Kyne at 1:37 pm, May 23, 2022

APPROVED
Montgomery County
Historic Preservation Commission

NOTES:

1. FLOOR JOISTS SHALL BE SPACED @ 16" O.C. UNLESS NOTED OTHERWISE.
2. (J) INDICATED JACK STUDS & (S) INDICATES KING STUDS. EXAMPLE: 1J+1S = ONE JACK STUD & ONE KING STUD AT EACH END OF SPECIFIED HEADER.
3. FLOOR SHEATHING SHALL BE 3/4" APA RATED 3/4" T&G PLYWOOD WITH SPAN RATING OF 48/24 OR STURD-I-FLOOR WITH 24" O.C. GRADE.
4. WALL SHEATHING SHALL BE 7/16" APA RATED OSB/PLYWOOD CONTINUOUS SHEATHING W/ 8d NAILS @ 6" O.C.ON EDGES AND 12" O.C. IN-FIELD.
5. INSTALL BRIDGING BETWEEN JOISTS AT MID-SPAN OR AS REQUIRED PER MANUFACTURER BRIDGING BETWEEN JOISTS UNDER KITCHEN PLATFORMS AND CERAMIC TILE AREAS FOR MIN.THREE JOIST BAYS @ 8'-0" O.C. MAX.
6. FLOOR JOISTS SHALL HAVE 1/2" GYPSUM BOARD CEILING ATTACHED DIRECTLY TO UNDERSIDE OF BOTTOM FLANGE OF JOIST, NOTIFY ENGINEER OF ANY UNFINISHED AREAS.
7. ALL JOISTS ARE DESIGNED PER MIN. PRO RATING (BASED ON LEVEL WEYERHAEUSER PRO RATING CRITERIA) CRITERIA OF 38. NOTIFY ENGINEER, IF HIGHER PRO RATING IS REQUIRED.
8. INSTALL SQUASH BLOCKS AT EVERY BEARING LOCATION AND PROVIDE SOLID BLOCKING UNDER EVERY BEARING WALL FROM ABOVE AT ALL I JOISTS.
9. PROVIDE JOISTS AT MAX. 16" O.C. SPACING UNDER CERAMIC TILE AREAS. JOIST MANUFACTURER TO DESIGN JOISTS FOR DEFLECTION LIMIT OF L/720 OR 0.3" MAX. COORDINATE LOCATION OF CERAMIC TILE AREAS WITH ARCHITECTURAL DRAWINGS.
10. PROVIDE DOUBLE JOISTS UNDER KITCHEN ISLANDS, OVERSIZED BATH TUBS.
11. WEB STIFFENERS ARE REQUIRED WHEN INTERMEDIATE BEARING LENGTH IS LESS THAN 5 1/4" AND SPAN ON EITHER SIDE OF BEARING IS LARGER THAN REQUIRED PER JOIST MANUFACTURER.
12. PROTECT ALL UNTREATED WOOD FROM DIRECT CONTACT WITH CONCRETE OR MASONRY.
13. PROVIDE SQUASH BLOCKS ON BOTH SIDES AT BEARING WALL LOCATIONS WITH ONE 10d NAILS AT EACH FLANGE.
14. PROVIDE BLOCKING PANELS PER MANUFACTURER'S SPECIFICATIONS, IF JOISTS ARE SUPPORTING SHEAR WALL FROM ABOVE.
15. PROVIDE SOLID BLOCKING BETWEEN JOISTS WHEN SUPPORTING BEARING WALL FROM ABOVE.
16. PROVIDE BACKER/FILLER BLOCKS AS RECOMMENDED BY JOIST MANUFACTURER AT CONNECTION LOCATIONS OR MULTIPLE JOISTS SUPPORTING POSTS FROM ABOVE.
17. DO NOT CUT HOLES OR NOTCHES WITHOUT PRIOR APPROVAL FROM ENGINEER OR JOIST MANUFACTURER.
18. PROVIDE SOLID BLOCKING OF SAME SIZE WITHIN FLOOR SYSTEM UNDER ALL JACK STUDS, KING STUDS & POSTS FROM ABOVE.
19. PROVIDE MIN. (2) 2x12 UP TO 4'-0" SPAN, (2) ML10 FOR 4'-0" TO 6'-0" SPAN, (2) ML12 6'-0" TO 9'-0" SPAN WHERE BEAM SIZES ARE NOT SPECIFIED ON PLANS. ANY SPANS LARGER THAN 9'-0" SUPPORTING FRAMING AND NOT SPECIFIED ON PLANS SHALL BE NOTIFIED TO ENGINEER IMMEDIATELY.
20. PROVIDE MIN. DOUBLE JOISTS OR SPECIAL FLOOR TRUSS UNDER (2) 2x POSTS AND (2) PLY MICROLAM LVL OR SPECIAL FLOOR TRUSS TO MATCH FLOOR THICKNESS UNDER (3) 2x POSTS UNLESS NOTED OTHERWISE ON THE PLAN. CONTRACTOR SHALL NOTIFY ENGINEER FOR SUPPORTING STRUCTURAL MEMBER FOR ALL OTHER POST SIZES COMING FROM ABOVE.
21. PROVIDE MIN. (3) 2x POST UNDER BEAMS UNLESS NOTED OTHERWISE.
22. ALL POSTS SHALL CONTINUE DOWN TO FOUNDATION OR STRUCTURAL MEMBER SUCH AS BEAM/GIRDER TRUSS BELOW.
23. PROVIDE MIN. 3 JACK STUDS + 2 KING STUDS AT ALL HEADERS UNLESS NOTED OTHERWISE.
24. ALL WALL STUDS SHALL SPF#2 AND SHALL BE SPACED AT MAX. 16" O.C. UNLESS NOTED OTHERWISE.
25. ALL TWO STORY HIGH WALLS SHALL BE (2) 2x6 SPF#2 BALLOON FRAMED UNLESS NOTED OTHERWISE.
26. PROVIDE FULL HEIGHT BLOCKING BETWEEN JOISTS UP TO THREE JOIST BAYS WHERE JOISTS ARE PARALLEL TO FOUNDATION WALL.

PLAN LEGENDS & SYMBOLS:

- INDICATES BEARING WALL
- INDICATES DRAIN HOLE FROM ABOVE
- INDICATES JOIST/TRUSS HANEGR (REFER TO SHOP DWGS)
- INDICATES FRAMING DIRECTION
- INDICATES REBAR DIRECTION
- (J+_S) — INDICATES NO. OF KING STUDS AT EACH END; INDICATES NO. OF JACK STUDS AT EACH END
- WF?? — INDICATES WALL FOOTING; WIDTH OF WALL FOOTING IN INCHES
- TS?? — INDICATES THICKENED SLAB; WIDTH OF THICKENED SLAB IN INCHES
- F.x.x — INDICATES ISOLATED COLUMN FOOTING; INDICATES SIZE OF FOOTING IN DECIMAL FEET
- ML?? — MICROLAM LVL 2.0E; DEPTH OF MICROLAM LVL IN INCHES
- LSL?? — LAMINATED STRAND LUMBER 1.7E; DEPTH OF TIMBERSTAND LSL BEAM IN INCHES
- PSL?? — PARALLAM STRAND LUMBER 2.0E; WIDTHxDEPTH OF MEMBER
- CC — COLUMN CAP
- CB — COLUMN BASE
- HD — HOLD DOWN ANCHOR
- MS — METAL STRAP
- H — JOIST/TRUSS/BEAM HANGER
- HC — HURRICANE CLIPS

MICROLAM LVL BEAM SCHEDULE

MARK	DESCRIPTION
(2) ML10	(2) 1 3/4" x 9 1/2" LVL - 1.9E
(2) ML12	(2) 1 3/4" x 11 7/8" LVL - 1.9E
(2) ML14	(2) 1 3/4" x 14" LVL - 1.9E
(3) ML10	(3) 1 3/4" x 9 1/2" LVL - 1.9E
(3) ML12	(3) 1 3/4" x 11 7/8" LVL - 1.9E
(3) ML14	(3) 1 3/4" x 14" LVL - 1.9E
(4) ML12	(4) 1 3/4" x 11 7/8" LVL - 1.9E

STEEL COLUMN SCHEDULE

MARK	DESCRIPTION
PIPE3-STD	3" Ø STANDARD STEEL PIPE COLUMN
PIPE3.5-ADJ-11GA	3.5Ø x 11GA. ADJUSTABLE STEEL PIPE COLUMN
PIPE3.5-STD	3 1/2"Ø STANDARD STEEL PIPE COLUMN
PIPE4-STD	4"Ø STANDARD STEEL PIPE COLUMN

© COPYRIGHT 2016
Structural Engineering content of this drawings are property of structBIM LLC and are issued for this project only. Any re-use or re-production of these drawings shall not be done without written consent of structBIM LLC. These drawings are to be read in conjuction with project specifications and drawings from other consultants. These drawings shall not be used as shop drawings. Do not scale drawings, use dimensions as specified.

GTM ARCHITECTS
7735 OLD GEORGETOWN ROAD
SUITE 700
BETHESDA, MD 20814
(240)333-2000
(240)333-2001 FAX
WWW.GTMARCHITECTS.COM
GTM

Seal

STATE OF MARYLAND — KAMAL KANDAL — 40082 — PROFESSIONAL ENGINEER

Consultant

structBIM ENGINEERS
WE DESIGN....WE BIM
46400 BENEDICT DR, SUITE #211
PHONE: 703-657-4481
E-MAIL: info@structBIM.com

Project

19 HIGH STREET, LOT 1
BROOKVILLE, MD 20833

I certify that these documents were prepared or approved by me, and that I am a duly licensed Professional Engineer under the laws of the State of Maryland, license number 40082. Expiration Date: 02-13-2023.

Issue Description	*Date*

structBIM Project No.	21-0243
Checked By	KK
Drawn By	KK
Scale	1/4" = 1'-0"

Sheet Title
FIRST FLOOR FRAMING PLAN

Sheet No.
S1

COPYRIGHT, 2016 structBIMEngineers, LLC.
PLOTTED ON: 4/15/2022 12:45:24 PM

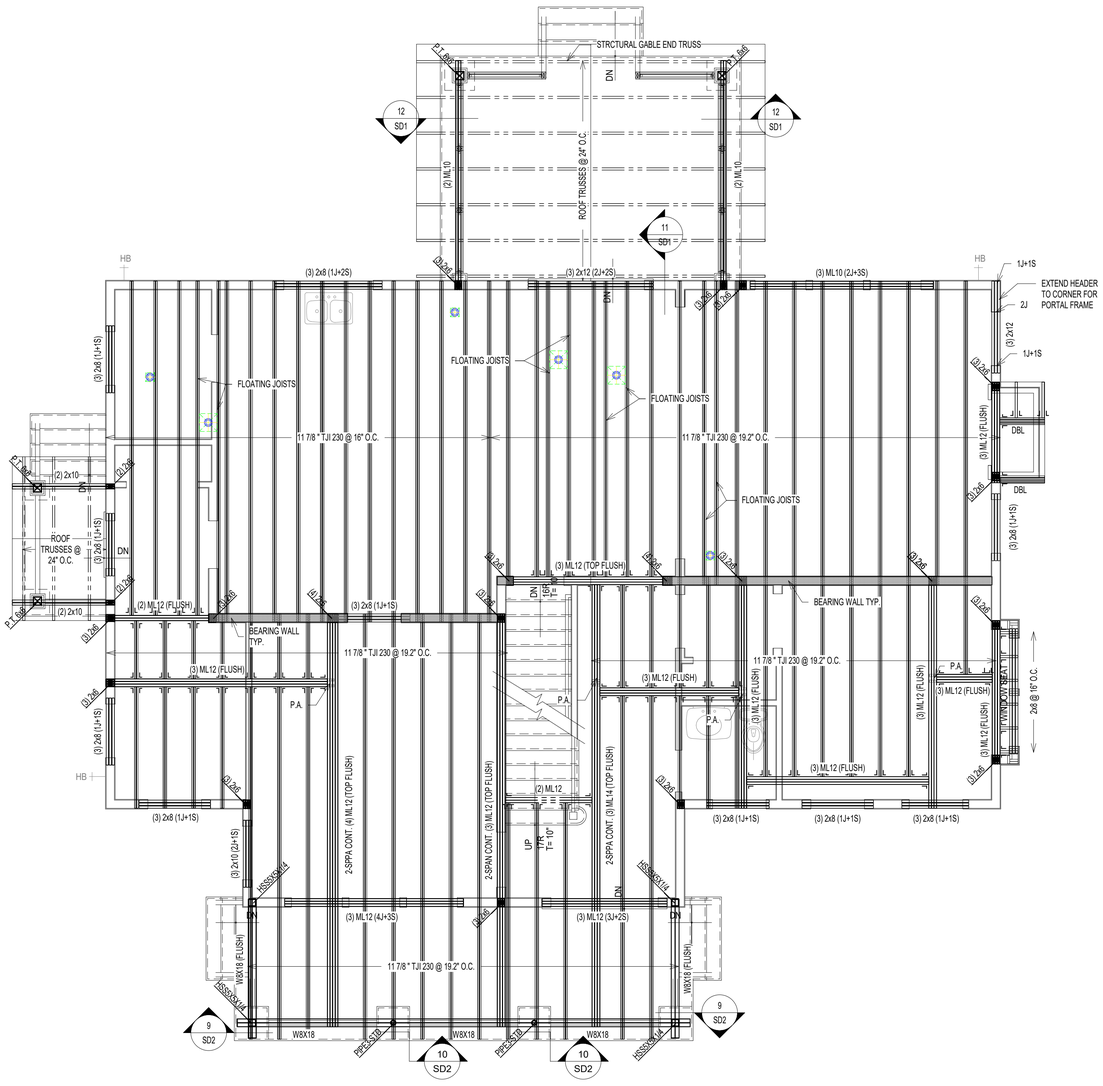

1 / S2 SECOND FLOOR FRAMING PLAN
SCALE: 1/4" = 1'-0"

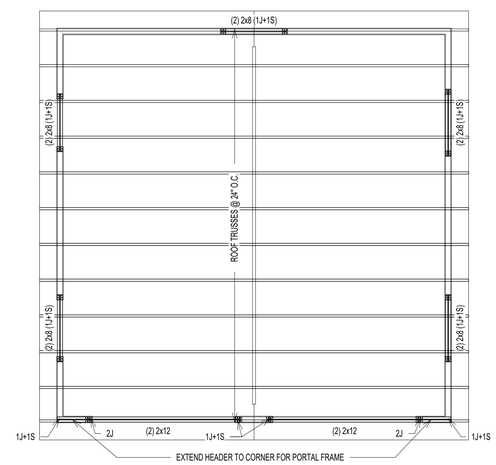

2 / S2 ROOF FRAMING PLAN @ GARAGE
SCALE: 1/4" = 1'-0"

REVIEWED
By Michael Kyne at 1:37 pm, May 23, 2022

APPROVED
Montgomery County
Historic Preservation Commission

NOTES:

1. FLOOR JOISTS SHALL BE SPACED @ 16" O.C. UNLESS NOTED OTHERWISE.
2. (J) INDICATED JACK STUDS & (S) INDICATES KING STUDS. EXAMPLE: 1J+1S = ONE JACK STUD & ONE KING STUD AT EACH END OF SPECIFIED HEADER.
3. FLOOR SHEATHING SHALL BE 3/4" APA RATED 3/4" T&G PLYWOOD WITH SPAN RATING OF 48/24 OR STURD-I-FLOOR WITH 24" O.C. GRADE.
4. WALL SHEATHING SHALL BE 7/16" APA RATED OSB/PLYWOOD CONTINUOUS SHEATHING W/ 8d NAILS @ 6" O.C.ON EDGES AND 12" O.C. IN-FIELD.
5. INSTALL BRIDGING BETWEEN JOISTS AT MID-SPAN OR AS REQUIRED PER MANUFACTURER BRIDGING BETWEEN JOISTS UNDER KITCHEN PLATFORMS AND CERAMIC TILE AREAS FOR MIN.THREE JOIST BAYS @ 8'-0" O.C. MAX.
6. FLOOR JOISTS SHALL HAVE 1/2" GYPSUM BOARD CEILING ATTACHED DIRECTLY TO UNDERSIDE OF BOTTOM FLANGE OF JOIST. NOTIFY ENGINEER OF ANY UNFINISHED AREAS.
7. ALL JOISTS ARE DESIGNED PER MIN. PRO RATING (BASED ON LEVEL WEYERHAEUSER PRO RATING CRITERIA) CRITERIA OF 38. NOTIFY ENGINEER. IF HIGHER PRO RATING IS REQUIRED.
8. INSTALL SQUASH BLOCKS AT EVERY BEARING LOCATION AND PROVIDE SOLID BLOCKING UNDER EVERY BEARING WALL FROM ABOVE AT ALL I JOISTS.
9. PROVIDE JOISTS AT MAX. 16" O.C. SPACING UNDER CERAMIC TILE AREAS. JOIST MANUFACTURER TO DESIGN JOISTS FOR DEFLECTION LIMIT OF L/720 OR 0.3" MAX. COORDINATE LOCATION OF CERAMIC TILE AREAS WITH ARCHITECTURAL DRAWINGS.
10. PROVIDE DOUBLE JOISTS UNDER KITCHEN ISLANDS, OVERSIZED BATH TUBS.
11. WEB STIFFENERS ARE REQUIRED WHEN INTERMEDIATE BEARING LENGTH IS LESS THAN 5 1/4" AND SPAN ON EITHER SIDE OF BEARING IS LARGER THAN REQUIRED PER JOIST MANUFACTURER.
12. PROTECT ALL UNTREATED WOOD FROM DIRECT CONTACT WITH CONCRETE OR MASONRY.
13. PROVIDE SQUASH BLOCKS ON BOTH SIDES AT BEARING WALL LOCATIONS WITH ONE 10d NAILS AT EACH FLANGE.
14. PROVIDE BLOCKING PANELS PER MANUFACTURER'S SPECIFICATIONS, IF JOISTS ARE SUPPORTING SHEAR WALL FROM ABOVE.
15. PROVIDE SOLID BLOCKING BETWEEN JOISTS WHEN SUPPORTING BEARING WALL FROM ABOVE.
16. PROVIDE BACKER/FILLER BLOCKS AS RECOMMENDED BY JOIST MANUFACTURER AT CONNECTION LOCATIONS OR MULTIPLE JOISTS SUPPORTING POSTS FROM ABOVE.
17. DO NOT CUT HOLES OR NOTCHES WITHOUT PRIOR APPROVAL FROM ENGINEER OR JOIST MANUFACTURER.
18. PROVIDE SOLID BLOCKING OF SAME SIZE WITHIN FLOOR SYSTEM UNDER ALL JACK STUDS, KING STUDS & POSTS FROM ABOVE.
19. PROVIDE MIN. (2) 2x12 UP TO 4'-0" TO 6'-0" SPAN, (2) ML10 FOR 4'-0" TO 6'-0" SPAN, (2) ML12 6'-0" TO 9'-0" SPAN WHERE BEAM SIZES ARE NOT SPECIFIED ON PLANS. ANY SPANS LARGER THAN 9'-0" SUPPORITNG FRAMING AND NOT SPECIFIED ON PLANS SHALL BE NOTIFIED TO ENGINEER IMMEDIATELY.
20. PROVIDE MIN. DOUBLE JOISTS OR SPECIAL FLOOR TRUSS UNDER (2) 2x POSTS AND (2) PLY MICROLAM LVL OR SPECIAL FLOOR TRUSS TO MATCH FLOOR THICKNESS UNDER (3) 2x POSTS UNLESS NOTED OTHERWISE ON THE PLAN. CONTRACTOR SHALL NOTIFY ENGINEER FOR SUPPORTING STRUCTURAL MEMBER FOR ALL OTHER POST SIZES COMING FROM ABOVE.
21. PROVIDE MIN. (3) 2x POST UNDER BEAMS UNLESS NOTED OTHERWISE.
22. ALL POSTS SHALL CONTINUE DOWN TO FOUNDATION OR STRUCTURAL MEMBER SUCH AS BEAM/GIRDER TRUSS BELOW.
23. PROVIDE MIN. 3 JACK STUDS + 2 KING STUDS AT ALL HEADERS UNLESS NOTED OTHERWISE.
24. ALL WALL STUDS SHALL SPF#2 AND SHALL BE SPACED AT MAX. 16" O.C. UNLESS NOTED OTHERWISE.
25. ALL TWO STORY HIGH WALLS SHALL BE (2) 2x6 SPF#2 BALLOON FRAMED UNLESS NOTED OTHERWISE.
26. PROVIDE FULL HEIGHT BLOCKING BETWEEN JOISTS UP TO THREE JOIST BAYS WHERE JOISTS ARE PARALLEL TO FOUNDATION WALL.

PLAN LEGENDS & SYMBOLS:

- INDICATES BEARING WALL
- INDICATES DRAIN HOLE FROM ABOVE
- INDICATES JOIST/TRUSS HANEGR (REFER TO SHOP DWGS)
- INDICATES FRAMING DIRECTION
- INDICATES REBAR DIRECTION
- (_J+_S) — INDICATES NO. OF KING STUDS AT EACH END; INDICATES NO. OF JACK STUDS AT EACH END
- WF?? — INDICATES WALL FOOTING; WIDTH OF WALL FOOTING IN INCHES
- TS?? — INDICATES THICKENED SLAB; WIDTH OF THICKENED SLAB IN INCHES
- Fx.x — INDICATES ISOLATED COLUMN FOOTING; INDICATES SIZE OF FOOTING IN DECIMAL FEET
- ML?? — MICROLAM LVL 2.0E; DEPTH OF MICROLAM LVL IN INCHES
- LSL?? — LAMINATED STRAND LUMBER 1.7E; DEPTH OF TIMBERSTAND LSL BEAM IN INCHES
- PSL?? — PARALLAM STRAND LUMBER 2.0E; WIDTHxDEPTH OF MEMBER
- CC — COLUMN CAP
- CB — COLUMN BASE
- HD — HOLD DOWN ANCHOR
- MS — METAL STRAP
- H — JOIST/TRUSS/BEAM HANGER
- HC — HURRICANE CLIPS

MICROLAM LVL BEAM SCHEDULE

MARK	DESCRIPTION
(2) ML10	(2) 1 3/4" x 9 1/2" LVL - 1.9E
(2) ML12	(2) 1 3/4" x 11 7/8" LVL - 1.9E
(2) ML14	(2) 1 3/4" x 14" LVL - 1.9E
(3) ML10	(3) 1 3/4" x 9 1/2" LVL - 1.9E
(3) ML12	(3) 1 3/4" x 11 7/8" LVL - 1.9E
(3) ML14	(3) 1 3/4" x 14" LVL - 1.9E
(4) ML12	(4) 1 3/4" x 11 7/8" LVL - 1.9E

STEEL COLUMN SCHEDULE

MARK	DESCRIPTION
PIPE3-STD	3" Ø STANDARD STEEL PIPE COLUMN
PIPE3.5-ADJ-11GA	3.50 x 11GA. ADJUSTABLE STEEL PIPE COLUMN
PIPE3.5-STD	3 1/2"Ø STANDARD STEEL PIPE COLUMN
PIPE4-STD	4"Ø STANDARD STEEL PIPE COLUMN

© COPYRIGHT 2016
Structural Engineering content of this drawings are property of structBIM LLC and are issued for this project only. Any re-use or re-production of these drawings shall not be done without written consent of structBIM LLC. These drawings are to be read in conjuction with project specifications and drawings from other consultants. These drawings shall not be used as shop drawings. Do not scale drawings, use dimensions as specified.

GTM ARCHITECTS
7735 OLD GEORGETOWN ROAD
SUITE 700
BETHESDA, MD 20814
(240)333-2000
(240)333-2001 FAX
WWW.GTMARCHITECTS.COM

Seal

STATE OF MARYLAND · KENNETH A. KANTOR · 40082 · PROFESSIONAL ENGINEER

Consultant

structBIM ENGINEERS
WE DESIGN....WE BIM
46400 BENEDICT DR, SUITE #211
PHONE: 703-657-4481
E-MAIL: info@structBIM.com

Project

19 HIGH STREET, LOT 1
BROOKVILLE, MD 20833

I certify that these documents were prepared or approved by me, and that I am a duly licensed Professional Engineer under the laws of the State of Maryland, license number 40082. Expiration Date: 02-13-2023.

Issue Description	*Date*

structBIM Project No.	21-0243
Checked By	KK
Drawn By	KK
Scale	1/4" = 1'-0"

Sheet Title
SECOND FLOOR FRAMING PLAN

Sheet No.
S2

COPYRIGHT, 2016 structBIMEngineers, LLC.
PLOTTED ON: 4/13/2022 12:45:29 PM

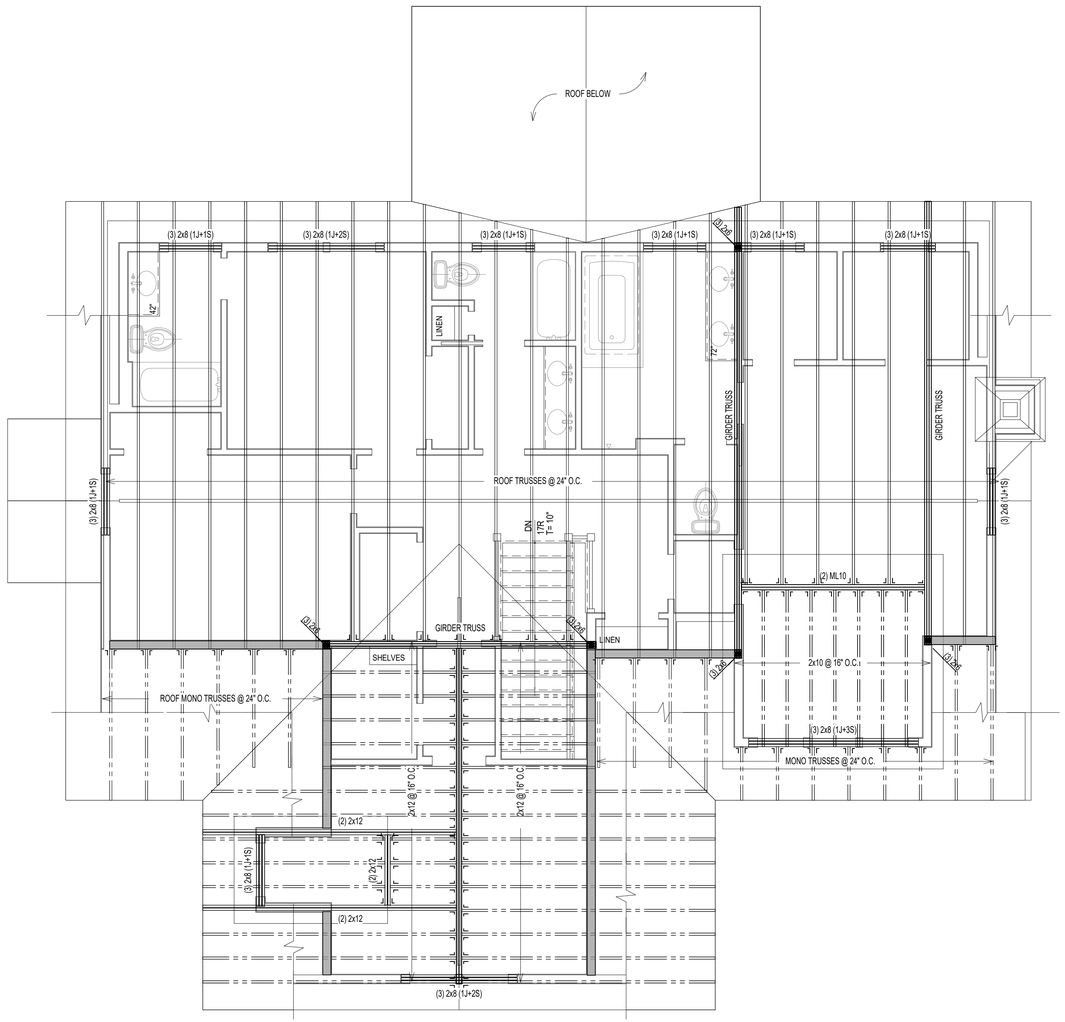

1 / S3 LOFT FLOOR FRAMING PLAN

SCALE: 1/4" = 1'-0"

NOTES:

1. ALL TRUSSES SHALL BE PRE-FABRICATED ENGINEERED ROOF TRUSSES AND SHALL BE INSTALLED PER TRUSS MANUFACTURER'S LAYOUT AND DESIGN. SUBMIT SIGNED AND SEALED SHOP DRAWINGS FOR REVIEW.
2. ALL ROOF SHEATHING SHALL BE APA RATED 7/16" C.C. C-D OR STRUCTURAL II WITH SPAN RATING OF 48/24 PER "AMERICAN PLYWOOD ASSOCIATION". PROVIDE MIN. NAILING PATTERN W/ 8d COMMON NAILS @ 6" O.C. ON EDGES AND 12" O.C. IN FIELD. PROVIDE PLYWOOD CLIPS AT PLYWOOD EDGES BETWEEN EACH FRAMING MEMBER.
3. TRUSS LAYOUT SHOWN ON THESE DRAWINGS ARE FOR SCHEMATIC PURPOSES ONLY AND TO REFLECT DESIGN INTENT FOR OTHER FRAMING MEMBERS. THESE DRAWINGS SHALL NOT BE CONSIDERED AS SHOP DRAWINGS. TRUSS DESIGN DRAWINGS PREPARED BY TRUSS MANUFACTURER SHALL BE USED FOR TRUSS LAYOUT AND COORDINATION. NOTIFY ENGINEER IF VARIATION IS MADE IN TRUSS DESIGN DRAWINGS THAT AFFECTS ORIGINAL DESIGN INTENT.
4. COORDINATE ROOF SLOPES, VALLEYS, HEEL HEIGHTS WITH ARCHITECTURAL DRAWINGS.
5. INSTALL MINIMUM H2.5A HURRICANE CLIPS AT EACH TRUSS BEARING UNLESS SPECIFIED ON SHOP DRAWINGS.
6. AT ALL NON LOAD BEARING WALLS MAINTAIN 1/4" GAP BETWEEN BOTTOM OF TRUSS BOTTOM CHORD AND TOP OF TOP PLATE. INSTALL SIMPSON "STC" TRUSS CLIPS TO MAINTAIN GAP TO ALLOW TRUSS MOVEMENT.
7. ALL SECTIONS/DETAIL CUTS MARKED AS TYP. SHALL BE APPLIED AT ALL SIMILAR CONDITIONS ON ENTIRE PLAN.
8. TRUSS MANUFACTURER TO DESIGN NECESSARY TEMPORARY/PERMENANT BRACING AND SHALL SPECIFY ON SHOP DRAWINGS.
9. TRUSS MANUFACTURER TO SPECIFY NECESSARY CONNECTORS AND FASTENERS FOR ALL CONNECTIONS INCLUDING BUT NOT LIMITED TO UPLIFT CONNECTORS, HANGERS.
10. PROVIDE SOLID BLOCKING OF SAME SIZE WITHIN FLOOR SYSTEM UNDER ALL JACK STUDS, KING STUDS & POSTS FROM ABOVE.
11. PROVIDE MIN. (3) 2x POST UNDER ALL GIRDER TRUSSES UNLESS NOTED OTHERWISE.
12. PROVIDE MIN. TWO JACK STUDS + TWO KING STUDS AT ALL HEADERS UNLESS NOTED OTHERWISE.
13. ALL WALL STUDS SHALL BE SPF#2 OR EQ. APPROVED AND SPACED AT MAX. 16" O.C. UNLESS NOTED OTHERWISE.

PLAN LEGENDS & SYMBOLS:

- INDICATES BEARING WALL
- INDICATES DRAIN HOLE FROM ABOVE
- INDICATES JOIST/TRUSS HANEGR (REFER TO SHOP DWGS)
- INDICATES FRAMING DIRECTION
- INDICATES REBAR DIRECTION
- (_J+_S) — INDICATES NO. OF KING STUDS AT EACH END; INDICATES NO. OF JACK STUDS AT EACH END
- WF?? — INDICATES WALL FOOTING; WIDTH OF WALL FOOTING IN INCHES
- TS?? — INDICATES THICKENED SLAB; WIDTH OF THICKENED SLAB IN INCHES
- Fx.x — INDICATES ISOLATED COLUMN FOOTING; INDICATES SIZE OF FOOTING IN DECIMAL FEET
- ML?? — MICROLAM LVL 2.0E; DEPTH OF MICROLAM LVL IN INCHES
- LSL?? — LAMINATED STRAND LUMBER 1.7E; DEPTH OF TIMBERSTAND LSL BEAM IN INCHES
- PSL?? — PARALLAM STRAND LUMBER 2.0E; WIDTHxDEPTH OF MEMBER
- CC — COLUMN CAP
- CB — COLUMN BASE
- HD — HOLD DOWN ANCHOR
- MS — METAL STRAP
- H — JOIST/TRUSS/BEAM HANGER
- HC — HURRICANE CLIPS

MICROLAM LVL BEAM SCHEDULE

MARK	DESCRIPTION
(2) ML10	(2) 1 3/4" x 9 1/2" LVL - 1.9E
(2) ML12	(2) 1 3/4" x 11 7/8" LVL - 1.9E
(2) ML14	(2) 1 3/4" x 14" LVL - 1.9E
(3) ML10	(3) 1 3/4" x 9 1/2" LVL - 1.9E
(3) ML12	(3) 1 3/4" x 11 7/8" LVL - 1.9E
(3) ML14	(3) 1 3/4" x 14" LVL - 1.9E
(4) ML12	(4) 1 3/4" x 11 7/8" LVL - 1.9E

STEEL COLUMN SCHEDULE

MARK	DESCRIPTION
PIPE3-STD	3" Ø STANDARD STEEL PIPE COLUMN
PIPE3.5-ADJ-11GA	3.50 x 11GA. ADJUSTABLE STEEL PIPE COLUMN
PIPE3.5-STD	3 1/2"Ø STANDARD STEEL PIPE COLUMN
PIPE4-STD	4"Ø STANDARD STEEL PIPE COLUMN

REVIEWED
By Michael Kyne at 1:37 pm, May 23, 2022

APPROVED
Montgomery County
Historic Preservation Commission

© COPYRIGHT 2016
Structural Engineering content of this drawings are property of structBIM LLC and are issued for this project only. Any re-use or re-production of these drawings shall not be done without written consent of structBIM LLC. These drawings are to be read in conjuction with project specifications and drawings from other consultants. These drawings shall not be used as shop drawings. Do not scale drawings, use dimensions as specified.

GTM ARCHITECTS
7735 OLD GEORGETOWN ROAD
SUITE 700
BETHESDA, MD 20814
(240)333-2000
(240)333-2001 FAX
WWW.GTMARCHITECTS.COM
GTM

Seal

STATE OF MARYLAND — KRISHNA KANDEL — 40082 — PROFESSIONAL ENGINEER

Consultant

structBIM ENGINEERS
WE DESIGN....WE BIM
46400 BENEDICT DR, SUITE #211
PHONE: 703-657-4481
E-MAIL: info@structBIM.com

Project

19 HIGH STREET, LOT 1
BROOKVILLE, MD 20833

I certify that these documents were prepared or approved by me, and that I am a duly licensed Professional Engineer under the laws of the State of Maryland, license number 40082. Expiration Date: 02-13-2023.

Issue Description	*Date*

structBIM Project No. 21-0243
Checked By KK
Drawn By KK
Scale 1/4" = 1'-0"

Sheet Title
ROOF FRAMING PLAN

Sheet No.
S3

COPYRIGHT, 2016 structBIMEngineers, LLC.
PLOTTED ON: 4/15/2022 12:45:32 PM

FILE NAME:

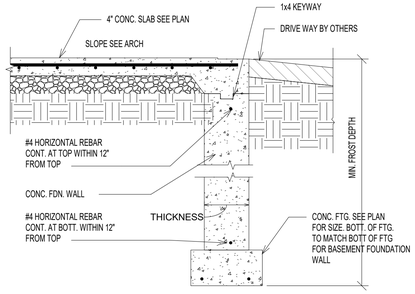

11 SD0 FOUNDATION WALL @ GARAGE ENTRY
SCALE: 3/4" = 1'-0"

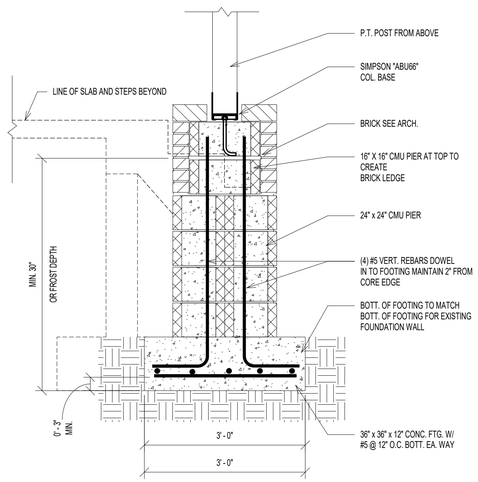

12 SD0 PIER FOOTING FOR DECK POST
SCALE: 3/4" = 1'-0"

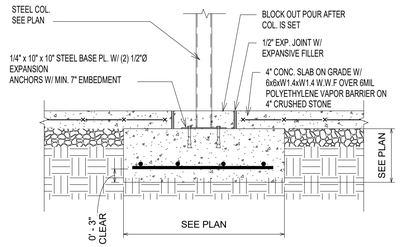

8 SD0 ISOLATED COLUMN FOOTING
SCALE: 3/4" = 1'-0"

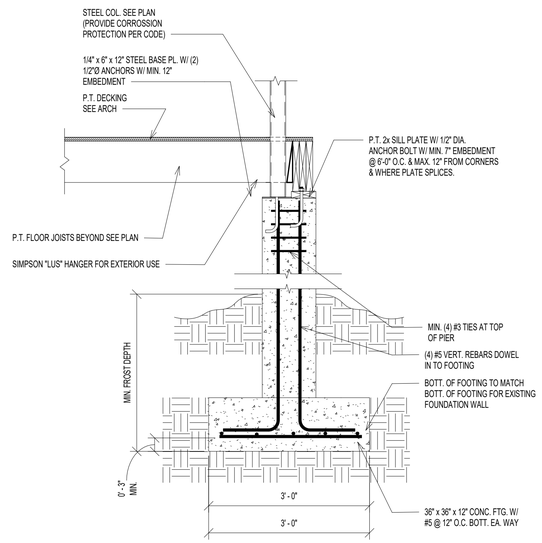

9 SD0 FNDN_PIER_STLCOL+WDBM
SCALE: 3/4" = 1'-0"

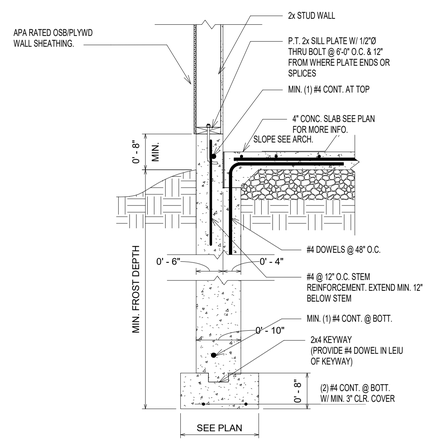

10 SD0 TYP. FOUNDATION WALL @ GARAGE W/ SIDING
SCALE: 3/4" = 1'-0"

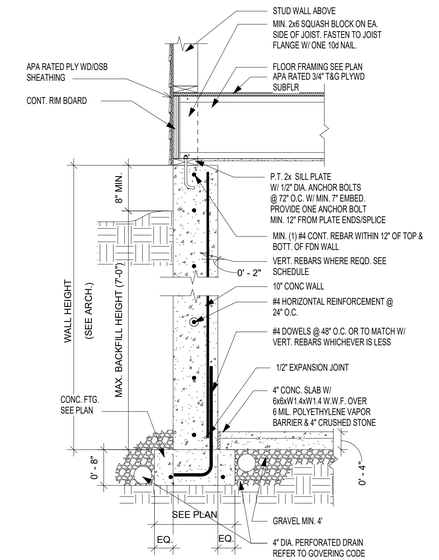

5 SD0 TYP. FOUNDATION WALL SECTION (JOISTS PERPENDICULAR)
SCALE: 3/4" = 1'-0"

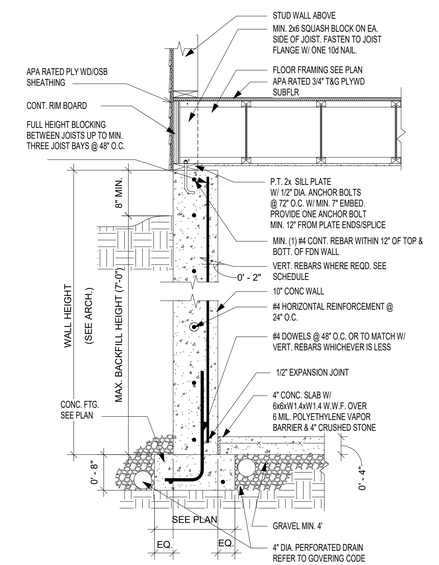

6 SD0 TYP. FOUNDATION WALL SECTION (JOISTS PARALLEL)
SCALE: 3/4" = 1'-0"

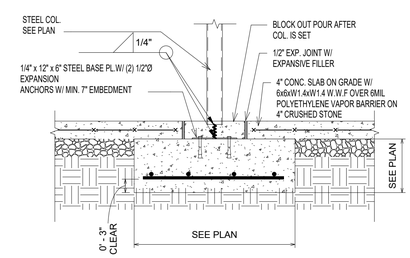

7 SD0 ISOLATED COLUMN FOOTING
SCALE: 3/4" = 1'-0"

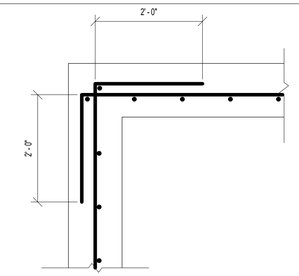

TYP. CORNER REINFORCEMENT DETAIL (PLAN VIEW)

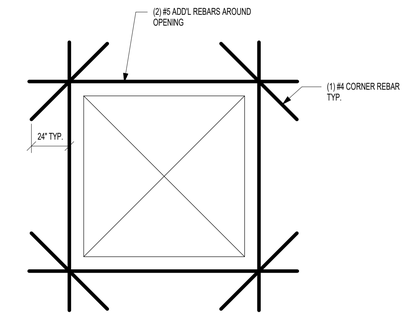

TYP. REINFORCEMENT AROUND OEPNING(ELEVATION VIEW)

1 SD0 TYP. REINFORCEMENT AT WALL CORNER & OPENING
SCALE: 3/4" = 1'-0"

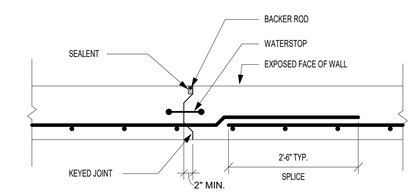

NOTE: PROVIDE CONSTRUCTION OR CONTROL JOINTS IN FOUNDATION WALLS AT EVERY 40'-0" TYPICAL

2 SD0 TYP. CONTROL JOINT @ FOUNDATION WALL
SCALE: 3/4" = 1'-0"

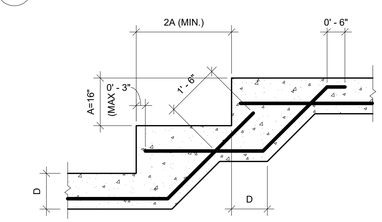

NOTE: SEE PLAN FOR REINFORCING AND OTHER INFO.

3 SD0 TYP. STEPPED FOOTING DETAIL
SCALE: 1/2" = 1'-0"

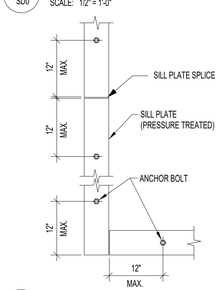

NOTES:

1. MINIMUM SILL BOLTING TO CONCRETE SHALL BE 1/2"Ø ANCHOR BOLTS, OR EQUAL, AT 6'-0" O.C. WITH 7" MINIMUM EMBEDMENT.

2. ALL ANCHORS FOR SILL PLATES SUPPORTING SHEAR WALLS (SW) SHALL HAVE MIN. 3"x3" STEEL WASHERS AND SHALL EXTEND A MINIMUM OF 2" ABOVE TOP OF SILL.

3. PROVIDE MINIMUM (2) BOLTS PER PIECE.

4. SEE OTHER DETAILS FOR USE OF MUDSILL ANCHORS IN LIEU OF ANCHOR BOLTS.

4 SD0 TYP. SILL PLATE ANCHORAGE
SCALE: 3/4" = 1'-0"

REVIEWED
By Michael Kyne at 1:37 pm, May 23, 2022

APPROVED
Montgomery County
Historic Preservation Commission

© COPYRIGHT 2016
Structural Engineering content of this drawings are property of structBIM LLC and are issued for this project only. Any re-use or re-production of these drawings shall not be done without written consent of structBIM LLC. These drawings are to be read in conjuction with project specifications and drawings from other consultants. These drawings shall not be used as shop drawings. Do not scale drawings, use dimensions as specified.

GTM ARCHITECTS

7735 OLD GEORGETOWN ROAD
SUITE 700
BETHESDA, MD 20814
(240)333-2000
(240)333-2001 FAX
WWW.GTMARCHITECTS.COM

GTM

Seal

STATE OF MARYLAND · KEVIN SOHAIL KANG · 40082 · PROFESSIONAL ENGINEER

Consultant

structBIM ENGINEERS
WE DESIGN....WE BIM

46400 BENEDICT DR, SUITE #211
PHONE: 703-657-4481
E-MAIL: info@structBIM.com

Project

19 HIGH STREET, LOT 1
BROOKVILLE, MD 20833

I certify that these documents were prepared or approved by me, and that I am a duly licensed Professional Engineer under the laws of the State of Maryland, license number 40082, Expiration Date: 02-13-2023.

Issue Description	*Date*

structBIM Project No.	21-0243
Checked By	KK
Drawn By	KK
Scale	As indicated

Sheet Title

FOUNDATION DETAILS

Sheet No.

SD0

COPYRIGHT, 2016 structBIMEngineers, LLC.
PLOTTED ON: 4/15/2022 12:45:37 PM

FILE NAME:

REVIEWED
By Michael Kyne at 1:37 pm, May 23, 2022

APPROVED
Montgomery County
Historic Preservation Commission

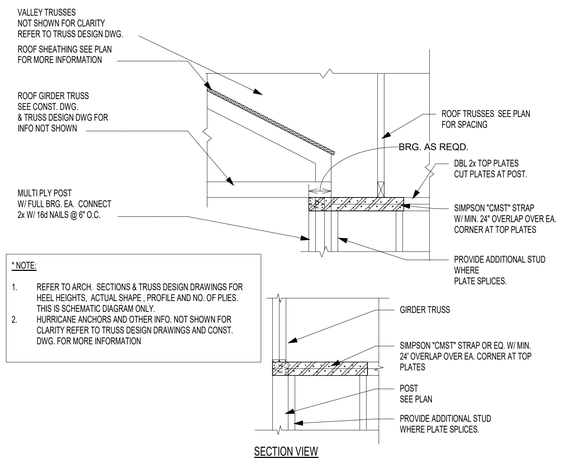

* NOTE:

1. REFER TO ARCH. SECTIONS & TRUSS DESIGN DRAWINGS FOR HEEL HEIGHTS, ACTUAL SHAPE , PROFILE AND NO. OF PLIES. THIS IS SCHEMATIC DIAGRAM ONLY.
2. HURRICANE ANCHORS AND OTHER INFO. NOT SHOWN FOR CLARITY REFER TO TRUSS DESIGN DRAWINGS AND CONST. DWG. FOR MORE INFORMATION

10 / SD1 G.T. W/ FULL BRG ON POST @ CORNER
SCALE: 3/4" = 1'-0"

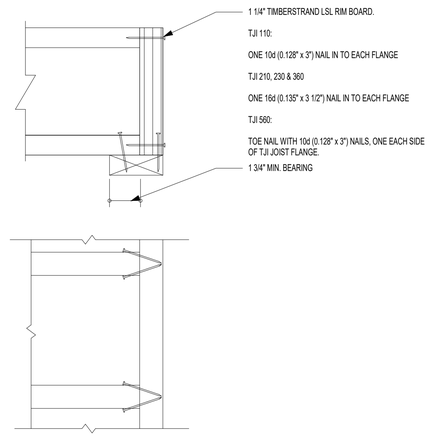

7 / SD1 RIM TO TJI JOIST CONNECTION
SCALE: 3/4" = 1'-0"

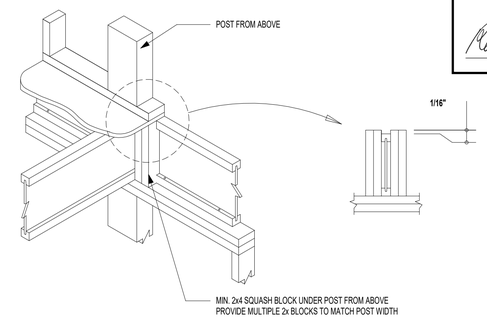

4 / SD1 JOISTS BRG @ EXT. WALL W/ POST ABOVE
SCALE: 3/4" = 1'-0"

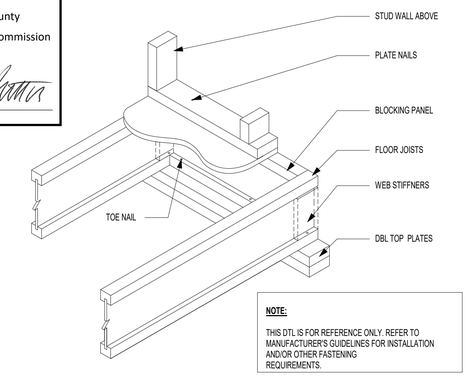

1 / SD1 I JOIST WITH BRG WALL ABOVE
SCALE: 3/4" = 1'-0"

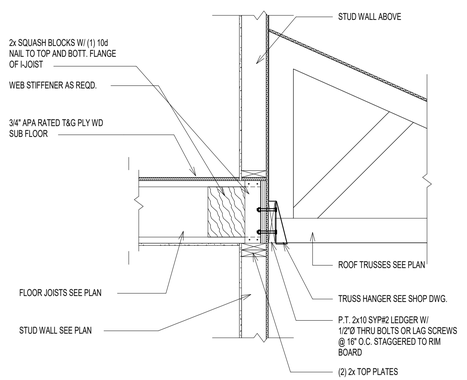

11 / SD1 SECTION @ PORCH
SCALE: 3/4" = 1'-0"

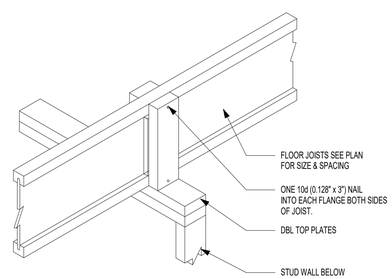

8 / SD1 TYP. SQUASH BLOCKS DETAIL
SCALE: 3/4" = 1'-0"

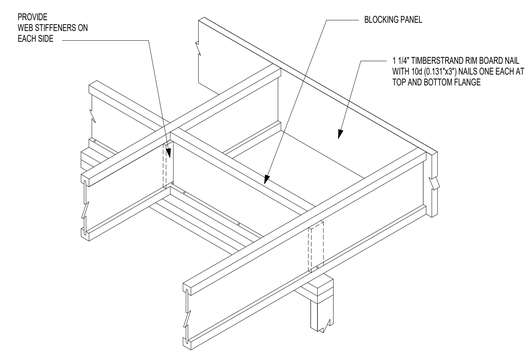

DO NOT CUT FLANGES OR WEB

5 / SD1 CANTILEVER JOIST DETAIL
SCALE: 3/4" = 1'-0"

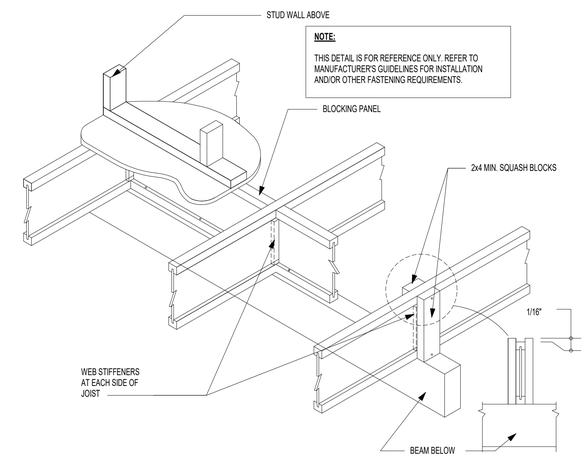

2 / SD1 JOIST W/ INT. BRG. ON BEAM & BRG. WALL FROM ABOVE
SCALE: 3/4" = 1'-0"

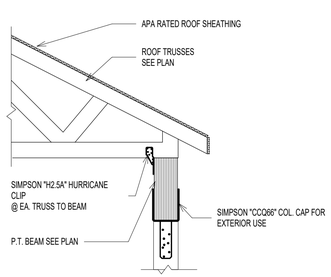

12 / SD1 SECTION AT PORCH ROOF
SCALE: 3/4" = 1'-0"

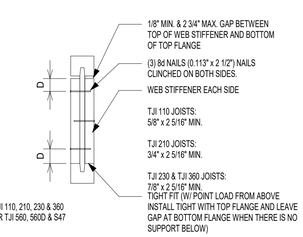

TJI JOIST SERIES	DEPTH	MINIMUM WEB STIFFENER SIZE	NAILING		
			TYPE	END	INTERMEDIATE
110	ALL	5/8" x 2 5/16"	8d (0.113" x 2 1/2")	3	3
210	ALL	3/4" x 2 5/16"			
230 & 360	ALL	7/8" x 2 5/16"			

9 / SD1 TYP. I JOIST WEB STIFFENER SCHEDULE
SCALE: 3/4" = 1'-0"

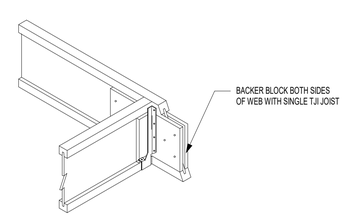

TJI	110		210		230 OR 360		560	
DEPTH	9 1/2" OR 11 7/8"	14"	9 1/2" OR 11 7/8"	14" OR 16"	9 1/2" OR 11 7/8"	14" OR 16"	11 7/8"	14" OR 16"
FILLER BLOCK (1)	2x6	2x8	2x6 + 3/8" SHEATHING	2x8 + 3/8" SHEATHING	2x6 + 1/2" SHEATHING	2x8 + 1/2" SHEATHING	(2) 2x6	(2) 2x8
BACKER BLOCK (1)	5/8" OR 3/4"		3/4" OR 7/8"		7/8" OR 1" NET		2x6	2x8

6 / SD1 SINGLE JOIST TO SINGLE JOIST CONNECTION
SCALE: 3/4" = 1'-0"

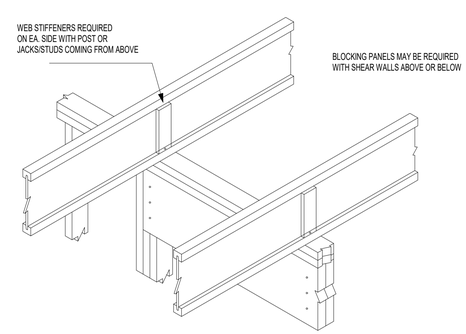

3 / SD1 INTERMEDIATE BEARING
SCALE: 3/4" = 1'-0"

© COPYRIGHT 2016
Structural Engineering content of this drawings are property of structBIM LLC and are issued for this project only. Any re-use or re-production of these drawings shall not be done without written consent of structBIM LLC. These drawings are to be read in conjuction with project specifications and drawings from other consultants. These drawings shall not be used as shop drawings. Do not scale drawings, use dimensions as specified.

GTM ARCHITECTS
7735 OLD GEORGETOWN ROAD
SUITE 700
BETHESDA, MD 20814
(240)333-2000
(240)333-2001 FAX
WWW.GTMARCHITECTS.COM
GTM

Seal

STATE OF MARYLAND
MICHAEL KANE
40082
PROFESSIONAL ENGINEER

Consultant

structBIM ENGINEERS
WE DESIGN....WE BIM
46400 BENEDICT DR, SUITE #211
PHONE: 703-657-4481
E-MAIL: info@structBIM.com

Project

19 HIGH STREET, LOT 1
BROOKVILLE, MD 20833

I certify that these documents were prepared or approved by me, and that I am a duly licensed Professional Engineer under the laws of the State of Maryland, license number 40082, Expiration Date: 02-13-2023.

Issue Description	*Date*

structBIM Project No.	21-0243
Checked By	KK
Drawn By	KK
Scale	3/4" = 1'-0"

Sheet Title
FRAMING DETAILS

Sheet No.
SD1

COPYRIGHT, 2016 structBIMEngineers, LLC.
PLOTTED ON: 4/15/2022 12:45:39 PM

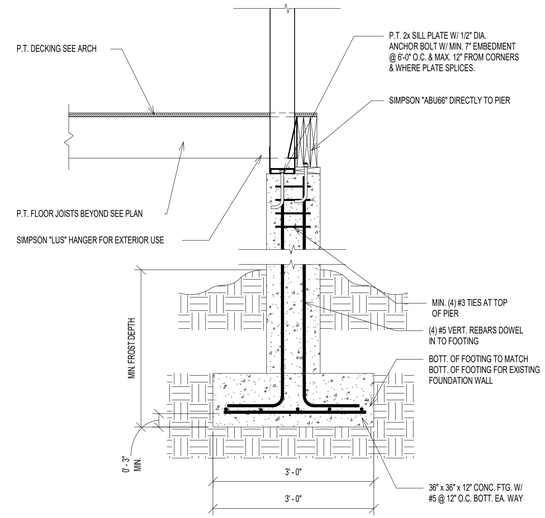

12 / SD2 DETAIL2
SCALE: 3/4" = 1'-0"

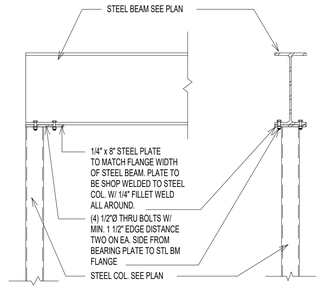

9 / SD2 STEEL BEAM - COL DETAIL @ END
SCALE: 3/4" = 1'-0"

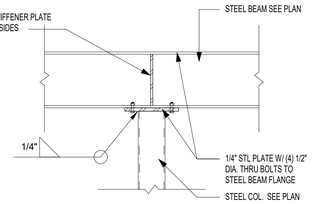

10 / SD2 STEEL BEAM TO STEEL COLUMN - INT. SUPPORT
SCALE: 3/4" = 1'-0"

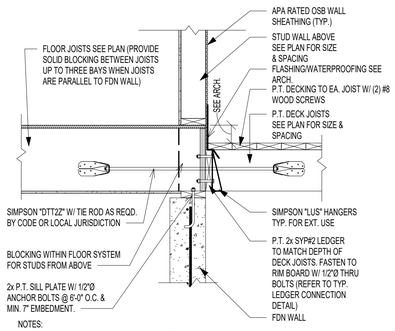

NOTES:
1. ALL FASTENERS EXPOSED TO WEATHER SHALL BE STAINLESS STEEL OR HOT-DIP GALVANIZED OR APPROVED BY MANUFACTURER FOR EXTERIOR USE.

DECK CONNECTORS TABLE (SIMPSON "DTT2Z OR EQ. APPROVED)				
DECK SIZE	6'-0" x 4'-0"	8'-0" x 4'-0"	12'-0" x 10'-0"	20'-0" x 10'-0"
NO. OF CONNECTORS	2	2	2	3

NOTES:
1. NO. OF CONNECTORS SHALL BE PROVIDED SUCH THAT ALL CONNECTORS ARE EQUALLY SPACED.
2. MIN. ONE CONNECTOR SHALL BE PROVIDED AT EACH END OF DECK.

11 / SD2 TYP. DECK CONNECTION DETAIL
SCALE: 3/4" = 1'-0"

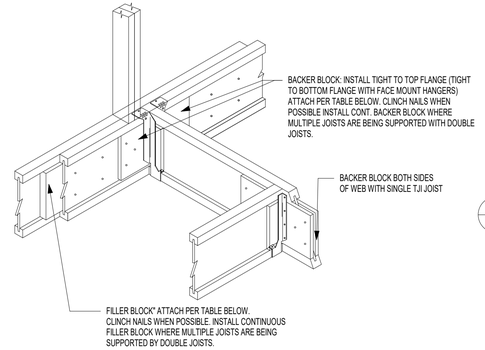

TJI	110		210		230 OR 360		560	
DEPTH	9 1/2" OR 11 7/8"	14"	9 1/2" OR 11 7/8"	14" OR 16"	9 1/2" OR 11 7/8"	14" OR 16"	11 7/8"	14" OR 16"
FILLER BLOCK (1)	2x6	2x8	2x6 + 3/8" SHEATHING	2x6 + 3/8" SHEATHING	2x6 + 1/2" SHEATHING	2x8 + 1/2" SHEATHING	(2) 2x6	(2) 2x8
BACKER BLOCK (1)	5/8" OR 3/4"		3/4" OR 7/8"		7/8" OR 1" NET		2x6	2x8

5 / SD2 TYPICAL DBL JOISTS CONNECTION W/ JOIST SUPPORTED
SCALE: 3/4" = 1'-0"

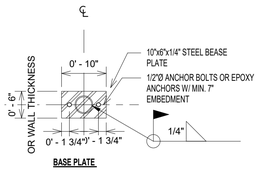

6 / SD2 TYP. STL. BASE PLATE DETAIL FOR STL COL.
SCALE: 3/4" = 1'-0"

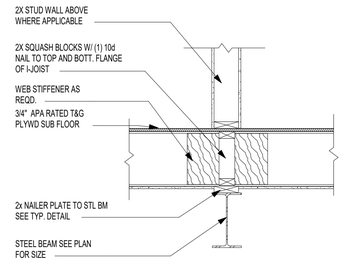

7 / SD2 TYP. STEEL BEAM NAILER PLATE CONNECTION
SCALE: 3/4" = 1'-0"

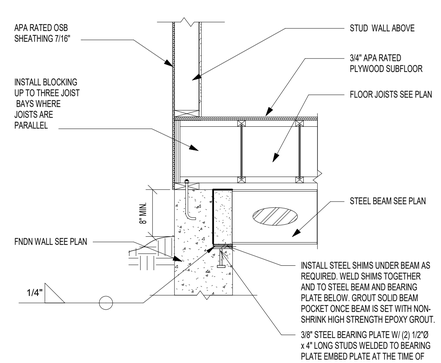

8 / SD2 TYP. STEEL BEAM NAILER PLATE CONNECTION
SCALE: 3/4" = 1'-0"

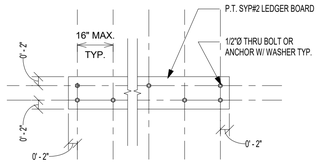

1 / SD2 TYP. DECK CONNECTION DETAIL
SCALE: 3/4" = 1'-0"

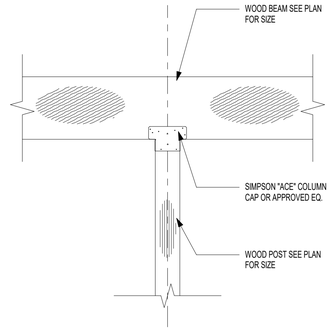

2 / SD2 INTERIOR POST W/ COL. CAP CONN.
SCALE: 3/4" = 1'-0"

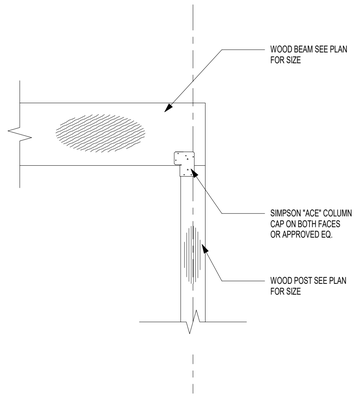

3 / SD2 END COL. TO BEAM BEARING CONNECTION
SCALE: 3/4" = 1'-0"

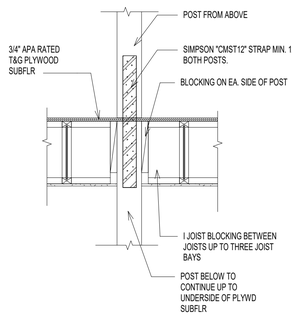

4 / SD2 TYP. POST TO POST CONNECTION
SCALE: 3/4" = 1'-0"

REVIEWED
By Michael Kyne at 1:37 pm, May 23, 2022

APPROVED
Montgomery County
Historic Preservation Commission

© COPYRIGHT 2016
Structural Engineering content of this drawings are property of structBIM LLC and are issued for this project only. Any re-use or re-production of these drawings shall not be done without written consent of structBIM LLC. These drawings are to be read in conjuction with project specifications and drawings from other consultants. These drawings shall not be used as shop drawings. Do not scale drawings, use dimensions as specified.

GTM ARCHITECTS

7735 OLD GEORGETOWN ROAD
SUITE 700
BETHESDA, MD 20814
(240)333-2000
(240)333-2001 FAX
WWW.GTMARCHITECTS.COM

Seal

STATE OF MARYLAND · KEVIN A. KANE · 40082 · PROFESSIONAL ENGINEER

Consultant

structBIM ENGINEERS
WE DESIGN....WE BIM
46400 BENEDICT DR, SUITE #211
PHONE: 703-657-4481
E-MAIL: info@structBIM.com

Project

19 HIGH STREET, LOT 1
BROOKVILLE, MD 20833

I certify that these documents were prepared or approved by me, and that I am a duly licensed Professional Engineer under the laws of the State of Maryland, license number 40082, Expiration Date: 02-13-2023.

Issue Description	*Date*

structBIM Project No.	21-0243
Checked By	KK
Drawn By	KK
Scale	3/4" = 1'-0"

Sheet Title
FRAMING DETAILS

Sheet No.
SD2

COPYRIGHT, 2016 structBIMEngineers, LLC.

PLOTTED ON: 4/15/2022 12:45:41 PM

FILE NAME:

Point Load Connector Spacing
8- Screw Connection

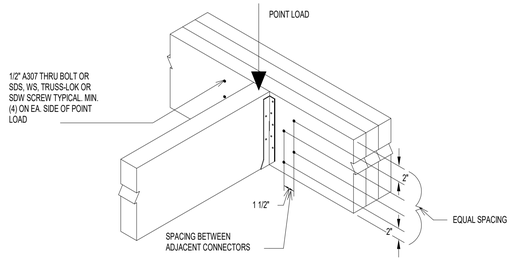

2 / SD3 LVL BEAM CONNECTION AT POINT LOAD
SCALE: 3/4" = 1'-0"

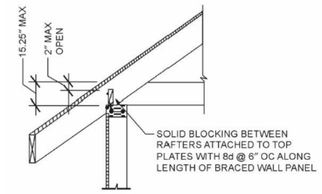

3 / SD3 TYPICAL ROOF BEARING @ BRACED WALL PANEL
SCALE: 3/4" = 1'-0"

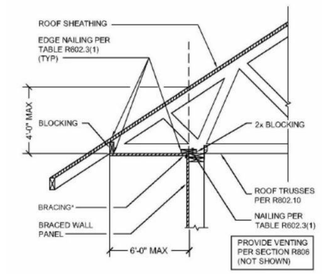

4 / SD3 TYPICAL ROOF BEARING @ BRACED WALL PANEL
SCALE: 3/4" = 1'-0"

ALLOWABLE HOLES

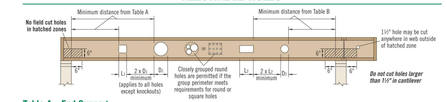

Table A—End Support

Minimum distance from edge of hole to inside face of nearest end support

Depth	TJI®	Round Hole Size 2"	3"	4"	5"	6½"	7"	8½"	11"	13"	Square or Rectangular Hole Size 2"	3"	4"	5"	6½"	7"	8½"	11"	13"
9½"	110	1'-6"	1'-6"	2'-0"	2'-6"	3'-0"					1'-0"	1'-6"	2'-6"	3'-6"	4'-6"				
	210	1'-0"	1'-0"	2'-0"	3'-0"	3'-0"					1'-0"	2'-0"	2'-6"	4'-0"	5'-0"				
	230	1'-0"	2'-0"	2'-6"	3'-6"	3'-6"					1'-0"	2'-0"	3'-0"	4'-6"	5'-0"				
11½"	110	1'-0"	1'-0"	1'-0"	1'-0"	2'-6"	2'-6"	3'-0"			1'-0"	1'-0"	1'-6"	2'-6"	4'-0"	4'-0"	6'-0"		
	210	1'-0"	1'-0"	1'-0"	1'-6"	2'-6"	3'-0"	3'-6"			1'-0"	1'-0"	2'-0"	3'-0"	5'-0"	5'-0"	6'-6"		
	230	1'-0"	1'-0"	1'-0"	2'-0"	3'-0"	3'-6"	4'-0"			1'-0"	1'-0"	2'-0"	3'-0"	5'-6"	5'-6"	7'-0"		
	360	1'-0"	1'-0"	1'-6"	2'-6"	4'-0"	5'-0"	7'-0"			1'-0"	1'-0"	2'-6"	4'-0"	6'-6"	6'-6"	7'-6"		
	560	1'-0"	1'-0"	1'-6"	3'-0"	5'-0"	5'-6"	8'-0"			1'-0"	2'-0"	3'-6"	5'-0"	7'-0"	7'-6"	8'-6"		
14"	110	1'-0"	1'-0"	1'-0"	1'-0"	1'-0"	1'-0"	2'-0"	3'-0"		1'-0"	1'-0"	1'-0"	1'-6"	3'-6"	4'-0"	6'-0"	8'-0"	
	210	1'-0"	1'-0"	1'-0"	1'-0"	1'-0"	1'-6"	3'-0"	6'-0"		1'-0"	1'-0"	1'-0"	2'-0"	4'-0"	4'-6"	6'-6"	8'-6"	
	230	1'-0"	1'-0"	1'-0"	1'-0"	1'-6"	2'-0"	3'-6"	6'-6"		1'-0"	1'-0"	1'-0"	2'-0"	4'-0"	5'-0"	7'-0"	9'-0"	
	360	1'-0"	1'-0"	1'-0"	1'-0"	2'-6"	3'-0"	5'-0"	8'-0"		1'-0"	1'-0"	1'-0"	2'-6"	5'-0"	5'-6"	8'-0"	9'-6"	
	560	1'-0"	1'-0"	1'-0"	1'-0"	2'-6"	3'-0"	6'-0"	9'-0"		1'-0"	1'-0"	1'-0"	3'-0"	6'-0"	7'-0"	9'-0"	10'-0"	
16"	210	1'-0"	1'-0"	1'-0"	1'-0"	1'-0"	1'-0"	1'-6"	3'-0"	6'-0"	1'-0"	1'-0"	1'-0"	1'-0"	2'-6"	3'-0"	6'-0"	8'-0"	10'-6"
	230	1'-0"	1'-0"	1'-0"	1'-0"	1'-0"	1'-0"	2'-0"	4'-0"	6'-6"	1'-0"	1'-0"	1'-0"	1'-0"	3'-0"	3'-6"	7'-0"	9'-0"	11'-0"
	360	1'-0"	1'-0"	1'-0"	1'-0"	1'-0"	1'-0"	2'-6"	5'-0"	8'-0"	1'-0"	1'-0"	1'-0"	1'-0"	4'-0"	5'-0"	9'-0"	10'-0"	11'-6"
	560	1'-0"	1'-0"	1'-0"	1'-0"	1'-0"	1'-0"	3'-0"	6'-6"	10'-0"	1'-0"	1'-0"	1'-0"	1'-6"	5'-0"	6'-0"	10'-0"	11'-0"	12'-0"

Table B—Intermediate or Cantilever Support

Minimum distance from edge of hole to inside face of nearest intermediate or cantilever support

Depth	TJI®	Round Hole Size 2"	3"	4"	5"	6½"	7"	8½"	11"	13"	Square or Rectangular Hole Size 2"	3"	4"	5"	6½"	7"	8½"	11"	13"
9½"	110	1'-6"	2'-0"	3'-0"	4'-0"	7'-0"					1'-6"	2'-0"	3'-0"	5'-0"	6'-0"				
	210	2'-0"	2'-0"	3'-0"	4'-6"	7'-6"					2'-0"	3'-0"	4'-0"	6'-0"	7'-0"				
	230	2'-0"	3'-0"	4'-0"	5'-0"	8'-0"					2'-0"	3'-0"	4'-6"	6'-0"	7'-6"				
11½"	110	1'-0"	1'-0"	1'-6"	2'-6"	4'-0"	4'-0"	8'-0"			1'-0"	1'-6"	2'-6"	4'-0"	6'-6"	7'-0"	9'-0"		
	210	1'-0"	1'-0"	2'-0"	3'-0"	4'-6"	5'-0"	9'-0"			1'-0"	2'-0"	3'-0"	4'-6"	7'-6"	8'-0"	10'-0"		
	230	1'-0"	2'-0"	2'-6"	3'-6"	5'-0"	5'-6"	9'-6"			1'-0"	2'-6"	3'-6"	5'-0"	8'-0"	8'-6"	10'-0"		
	360	2'-0"	2'-0"	4'-0"	5'-6"	7'-0"	7'-6"	11'-0"			2'-0"	3'-6"	5'-0"	7'-0"	9'-0"	9'-6"	11'-0"		
	560	1'-6"	3'-0"	4'-6"	5'-6"	8'-0"	8'-6"	12'-0"			3'-0"	4'-6"	6'-0"	8'-0"	10'-0"	11'-0"	12'-0"		
14"	110	1'-0"	1'-0"	1'-0"	1'-0"	2'-0"	2'-6"	4'-6"	8'-0"		1'-0"	1'-0"	1'-0"	2'-6"	5'-0"	6'-0"	9'-0"	12'-0"	
	210	1'-0"	1'-0"	1'-0"	1'-0"	2'-6"	3'-0"	5'-0"	9'-0"		1'-0"	1'-0"	2'-0"	3'-6"	6'-0"	7'-0"	10'-0"	12'-6"	
	230	1'-0"	1'-0"	1'-0"	2'-0"	3'-0"	3'-6"	5'-6"	10'-0"		1'-0"	1'-0"	2'-0"	3'-6"	6'-0"	7'-6"	10'-6"	13'-0"	
	360	1'-0"	1'-0"	2'-0"	3'-6"	5'-0"	5'-6"	9'-0"	12'-6"		1'-0"	2'-0"	3'-0"	4'-6"	7'-6"	8'-6"	12'-0"	14'-0"	
	560	1'-0"	1'-0"	1'-6"	3'-0"	5'-6"	6'-6"	9'-6"	13'-6"		1'-0"	3'-0"	5'-0"	7'-0"	10'-0"	11'-0"	13'-6"	15'-0"	
16"	210	1'-0"	1'-0"	1'-0"	1'-0"	1'-0"	1'-6"	3'-0"	5'-6"	9'-6"	1'-0"	1'-0"	1'-0"	2'-0"	3'-0"	4'-6"	9'-0"	12'-6"	15'-6"
	230	1'-0"	1'-0"	1'-0"	1'-0"	1'-0"	2'-0"	4'-0"	6'-6"	10'-6"	1'-0"	1'-0"	1'-0"	2'-0"	3'-6"	6'-0"	10'-6"	13'-0"	16'-0"
	360	1'-0"	1'-0"	1'-0"	1'-0"	3'-0"	4'-0"	6'-6"	10'-0"	13'-4"	1'-0"	1'-0"	2'-0"	4'-0"	7'-6"	8'-6"	13'-0"	14'-6"	17'-0"
	560	1'-0"	1'-0"	1'-0"	1'-0"	2'-0"	3'-6"	7'-0"	11'-0"	15'-0"	1'-0"	1'-0"	3'-0"	5'-6"	9'-0"	10'-0"	14'-6"	16'-0"	18'-0"

* Rectangular holes based on measurement of longest side.

How to Use These Tables

1. Using **Table A, Table B**, or both if required, determine the hole shape/size and select the TJI® joist and depth.
2. Scan horizontally until you intersect the correct hole size column.
3. Measurement shown is minimum distance from edge of hole to support.
4. Maintain the required minimum distance from the end **and** the intermediate or cantilever support.

General Notes

- Holes may be located vertically anywhere within the web. Leave ¼" of web (minimum) at top and bottom of hole.
- Knockouts are located in web at approximately 12" on-center; they do not affect hole placement.
- For simple span (5' minimum) uniformly loaded joists meeting the requirements of this guide, one maximum size round hole may be located at the center of the joist span **provided that no other holes occur in the joist.**
- Distances are based on the maximum uniform loads shown in this guide. For other load conditions or hole configurations, use Forte™ software or contact your iLevel representative.

1 / SD3 TYPICAL ALLOWABLE HOLE SIZES FOR I JOISTS
SCALE: 3/4" = 1'-0"

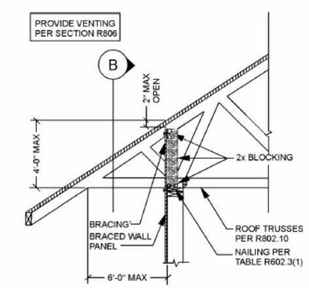

A SECTION

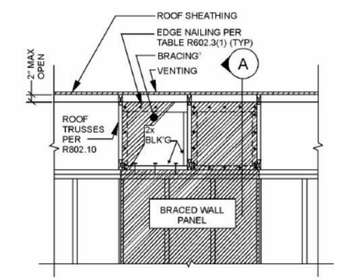

B ELEVATION

5 / SD3 TYPICAL ROOF BEARING @ BRACED WALL PANEL
SCALE: 3/4" = 1'-0"

ASSEMBLY	A	B	C	D	E	F
SKETCH	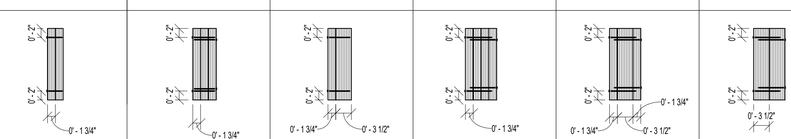					
FASTNER	SIMPSON - SDW22 x 3 5/8"	SIMPSON - SDW22 x 5"	SIMPSON - SDW22 x 5"	SIMPSON - SDW22 x 6 3/4"	SIMPSON - SDW22 x 6 3/4"	SIMPSON - SDW22 x 6 3/4"
SPACING	12" O.C.	12" O.C.	12" O.C.	12" O.C.	12" O.C.	12" O.C.
NOTE		INSTALL FASTNERS FROM BOTH SIDES STAGGER BY 3" FASTENERS FROM OPPOSITE SIDES		INSTALL FASTNERS FROM BOTH SIDES STAGGER BY 3" FASTENERS FROM OPPOSITE SIDES	INSTALL FASTNERS FROM BOTH SIDES STAGGER BY 3" FASTENERS FROM OPPOSITE SIDES	INSTALL FASTNERS FROM BOTH SIDES STAGGER BY 3" FASTENERS FROM OPPOSITE SIDES

NOTES:

1. CONTACT ENGINEER FOR ALTERNATE FASTENERS IF NEEDED.
2. NOTIFY ENGINEER IF POINT LOAD IS APPLIED ON LVL BEAMS. INSTALL MIN. 8 FASTENERS ON EITHER SIDE OF POINT LOAD WITH 2" SPACING.
3. MAINTAIN MINIMUM EDGE DISTANCE OF 6" FROM ENDS.

2A / SD3 TYP. LVL PLY CONNECTION DETAIL
SCALE: 3/4" = 1'-0"

REVIEWED
By Michael Kyne at 1:37 pm, May 23, 2022

APPROVED
Montgomery County
Historic Preservation Commission

© COPYRIGHT 2016
Structural Engineering content of this drawings are property of structBIM LLC and are issued for this project only. Any re-use or re-production of these drawings shall not be done without written consent of structBIM LLC. These drawings are to be read in conjuction with project specifications and drawings from other consultants. These drawings shall not be used as shop drawings. Do not scale drawings, use dimensions as specified.

GTM ARCHITECTS
7735 OLD GEORGETOWN ROAD
SUITE 700
BETHESDA, MD 20814
(240)333-2000
(240)333-2001 FAX
WWW.GTMARCHITECTS.COM

Seal

Consultant

structBIM ENGINEERS
WE DESIGN....WE BIM
46400 BENEDICT DR, SUITE #211
PHONE: 703-657-4481
E-MAIL: info@structBIM.com

Project

19 HIGH STREET, LOT 1
BROOKVILLE, MD 20833

I certify that these documents were prepared or approved by me, and that I am a duly licensed Professional Engineer under the laws of the State of Maryland, license number 40082, Expiration Date: 02-13-2023.

Issue Description	*Date*

structBIM Project No.	21-0243
Checked By	KK
Drawn By	KK
Scale	3/4" = 1'-0"

Sheet Title
FRAMING DETAILS

Sheet No.
SD3

COPYRIGHT, 2016 structBIMEngineers, LLC.

PLOTTED ON: 4/15/2022 12:45:44 PM

FILE NAME:

STANDARDS AND CODES:

- DESIGN BUILDING CODE: INTERNATIONAL RESIDENTIAL CODE 2018 EDITION, STATE OR LOCAL JURISDICTION AMENDMENTS AND/OR ORDINANCES.
- IN ADDITION TO THE REQUIREMENTS INCLUDED IN THESE PROJECT, ALL CONSTRUCTION AND MATERIAL SHALL FURTHER CONFORM TO THE APPLICABLE PROVISIONS FROM LATEST EDITION OF FOLLOWING STANDARDS/CODES AS REQUIRED BY GOVERNING CODE OR LOCAL JURISDICTION.
- ACI (AMERICAN CONCRETE INSTITUTE)-318: BUILDING CODE REQUIREMENTS FOR STRUCTURAL CONCRETE..
- ACI-332: CODE REQUIREMENTS FOR RESIDENTIAL CONCRETE CONSTRUCTION
- ACI-530: BUILDING CODE REQUIREMENTS FOR MASONRY STRUCTURES
- AISC (AMERICAN INSTITUTE OF STEEL CONSTRUCTION): STEEL CONSTRUCTION MANUAL.
- NDS: NATIONAL DESIGN SPECIFICATIONS (NOS) FOR WOOD CONSTRUCTOIN WITH SUPPLEMENT.
- WFCM: WOOD FRAME CONSTRUCTION MANUAL FOR ONE- AND TWO- FAMILY DWELLINGS.
- AFPA: AMERICAN FOREST AND PAPER ASSOCIATOIN - SPAN TABLE FOR JOISTS AND RAFTERS.
- AISI S100: NORTH AMERICAN SPECIFICATION FOR THE DESIGN OF COLD FORMED STEEL STRUCTURAL MEMBERS.
- AISI S230: STANDARD FOR COLD-FORMED STEEL FRAMING-PRESCRIPTIVE METHOD FOR ONE- AND TWO-FAMILY DWELLINGS.
- AMERICAN INSTITUTE OF TIMBER CONSTRUCTION (AITC).
- AMERICAN NATIONAL STANDARDS INSTITUTE (ANSI).
- APA (AMERICAN PLYWOOD ASSOCIATION) E30: ENGINEERED WOOD CONSTRUCTION GUIDE
- ASCE - 5 (AMERICAN SOCIETY OF CIVIL ENGINEERS): BUILDING CODE REQUIREMENTS FOR MASONRY STRUCTURES.
- ASCE-6: SPECIFICATIONS FOR MASONRY STRUCTURES.
- ASCE-7: MINIMUM DESIGN LOADS FOR BUILDING AND OTHER STRUCTURES.
- AMERICAN WOOD COUNCIL (AWC).
- AMERICAN SOCIETY FOR TESTING AND MATERIALS (ASTM).
- AMERICAN WOOD PROTECTION ASSOCIATION (AWPA).
- AMERICAN WELDING SOCIETY (AWS).
- FEDERAL EMERGENCY MANAGEMENT AGENCY (FEMA).
- GYPSUM ASSOCIATION (GA).
- NATIONAL CONCRETE MASONRY ASSOCIATION (NCMA).
- SSPC: STEEL STRUCTURES PAINTING COUNCIL.
- TPI-I: NATOINAL DESIGN STANDARDS FOR METAL-PLATE-CONNECTED WOOD TRUSS CONSTRUCTION.

DESIGN LOADS:

DESCRIPTION	DEAD LOAD	LIVE LOAD	SNOW LOAD (b)
ROOF	17 PSF	-	30 PSF
FLOOR	15 PSF	40 PSF	-
ATTIC W/OUT STORAGE	10 PSF	10 PSF	-
ATTIC W/ LIMITED STORAGE	10 PSF	20 PSF	-
HABITABLE ATTICS & ATTICS W/ FIXED STAIR	10 PSF	30 PSF	-
SLEEPING ROOMS	10 PSF	30 PSF	-
BALCONIES & DECKS	10 PSF	40 PSF	-
STAIRS	10 PSF	40 PSF	-
GUARD RAILS & HAND RAILS	-	200 LBS (c)	-

WIND LOAD:

- WIND SPEED (ULTIMATE): 115 MPH
- WIND PRESSURE: 18 PSF (f)
- WIND EXPOSURE CATEGORY: B

FOUNDATION DESIGN LOADS:

- SOIL BEARING CAPACITY (g): 2000 PSF
- LATERAL EARTH PRESSURE: 60 PSF/FT

EARTHQUAKE LOADS:

- SEISMIC DESIGN CATEGORY: B
- SITE CLASS: B

NOTES:

a. REFER TO IRC TABLE R301.5 FOR MORE INFORMATION.
b. SNOW LOAD SPECIFIED IS GROUND SNOW LOAD ONLY.
c. A SINGLE CONCENTRATED LOAD APPLIED IN ANY DIRECTION AT ANY POINT ALONG THE TOP.
d. MECHANICAL EQUIPMENT LOADS IN EXCESS OF 200 LBS SHALL BE NOTIFIED TO STRUCTURAL ENGINEER.
e. PRE-FABRICATED STRUCTURAL COMPONENT SHALL COMPLY WITH DESIGN LOADS FROM APPLICABLE CODES/STANDARDS IN ADDITION TO LOADS SPECIFIED IN THESE NOTES.
f. WIND PRESSURE SPECIFIED IS FOR MAIN WIND FORCE RESISTING SYSTEM ONLY. WIND PRESSURE & LOADS FOR STRUCTURAL COMPONENTS AND CLADDING SHALL BE DETERMINED BY RESPECTIVE REGISTERED DESIGN PROFESSIONAL PER APPLICABLE STANDARDS/CODES.
g. SOIL BEARING CAPACITY IS ASSUMED UNLESS GEOTECHNICAL REPORT IS PROVIDED PER SITE WORK SECTION.

DEFLECTION CRITERIA:

DESCRIPTION	TOTAL LOAD	LIVE LOAD
ROOF TRUSSES/RAFTERS/CEILING JOISTS	L/240	L/360 OR 1/2" MAX.
FLOOR JOISTS/FLOOR TRUSSES	L/240	L/480 OR 1/2" MAX.
MEMBERS SUPPORTING BRICK/ HORIZONTAL MASONRY MEMBERS	L/600 OR 0.3" MAX.	
JOISTS/TRUSSES SUPPORTING CERAMIC TILE	L/720	

SITE WORK:

- GEOTECHNICAL REPORT WAS NOT PROVIDED AND FOUNDATION DESIGN IS BASED ON ASSUMED SOIL DESIGN CRITERIA AND SHALL BE FIELD VERIFIED.
- BOTTOM OF ALL EXTERIOR FOOTING SHALL BE MINIMUM FROST DEPTH OF 30 INCHES BELOW GRADE OR AS REQUIRED BY GOVERNING AUTHORITY OR CODE, AND SHALL PROJECT 12" IN TO UNDISTURBED VIRGIN SOIL OR ENGINEERED FILL.
- SOIL BEARING CAPACITY SHALL BE VERIFIED ON-SITE BY GEOTECHNICAL ENGINEER.
- ALL BEARING STRATA SHALL BE ADEQUATELY DRAINED PRIOR TO PLACING FOUNDATION CONCRETE.
- THE SIDES OF FOOTINGS MAY BE EARTH-FORMED IF THE EXCAVATION CAN BE KEPT VERTICAL CLEAN AND STABLE. OTHERWISE FORMS MUST BE USED.
- UNBRACED EXCAVATIONS SHALL BE SLOPED NO GRATER THAN 2:1.
- NO EXCAVATION SHALL BE CLOSER THAN ATLEAST A SLOPE OF 2:1 TO THE UNDERSIDE OF ANY EXISTING OR NEW FOOTING WITHOUT THE WRITTEN AND CERTIFIED PERMISSION FROM GEOTECHNICAL ENGINEER.
- STEP FOOTINGS SHALL BE PROVIDED WITH A RATIO OF 2:1.
- FOUNDATION ELEMENTS THAT ARE TO SUPPORT FILL ON BOTH SIDES SHALL BE BACKFILLED SIMULTANEOUSLY AND UNIFORMLY ON BOTH SIDES.
- FOUNDATION ELEMENTS THAT ARE TO SUPPORT FILL ON ONE SIDE ONLY SHALL BE PROPERLY BRACED BY PERMANENT STRUCTURAL ELEMENTS PRIOR TO BACKFILLING. PROVIDE TEMPORARY BRACING AS REQUIRED UNTIL PERMANENT BRACING IN PLACE AND FOUNDATION WALL ACHIEVES DESIRED STRENGTH.
- ENGINEERED FILLS HALL BE PLACED IN 8" MAXIMUM HEIGHT LOOSE LIFTS AND COMPACTED TO 95% OF MAXIMUM DRY DENSITY AT OPTIMUM MOISTURE CONTENT AS ESTABLISHED BY ASTM D-698.
- NO PORTION OF THE STRUCTURAL DRAWINGS SHALL BE USED AS SHOP DRAWINGS. CONTRACTOR IS RESPONSIBLE FOR FURNISHING SHOP DRAWINGS AND SHALL SUBMIT TO ENGINEER OF RECORD FOR REVIEW.
- PROVIDE SHORING AND PROTECTION FOR EXCAVATION BANKS AS NECESSARY TO AVOID CAVING
- PROVIDE 6 MIL POLYETHYLENE VAPOR VARIOUS UNDER SLAB ON GRADE OR AS RECOMMENDED BY GEOTECHNICAL ENGINEER.
- ALL RECOMMENDATIONS SPECIFIED IN GEOTECHNICAL REPORT SHALL BE FOLLOWED ALL THE TIME AND SHALL GOVERN.

FILE NAME:

GENERAL

- STRUCTURAL ENGINEERING DRAWINGS PREPARED IN THIS SET ARE BASED ON ARCHITECTURAL DRAWINGS AND PROVIDED INFORMATION AND SHALL BE READ IN CONJUNCTION WITH ARCHITECTURAL DRAWINGS.
- DETAILS, SECTIONS AND NOTES SHOWN ON THESE DRAWINGS ARE INTENDED TO BE TYPICAL AND SHALL BE APPLY TO SIMILAR CONDITIONS ELSEWHERE OTHERWISE SHOWN OR NOTED.
- THE STRUCTURAL INTEGRITY OF THE BUILDING IS DEPENDENT UPON COMPLETION OF WORK ACCORDING TO CONTRACT DRAWINGS AND SPECIFICATIONS. THE STRUCTURAL ENGINEER ASSUMES NO LIABILITY FOR THE STRUCTURE DURING CONSTRUCTION. THE METHODS OF CONSTRUCTION AND SEQUENCE OF OPERATIONS IS THE SOLE RESPONSIBILITY OF OWNER/CONTRACTOR.
- TEMPORARY BRACING AND SHORING SHALL BE RESPONSIBILITY OF CONTRACTOR AND SHALL BE DESIGNED BY SPECIALITY ENGINEER PER APPLICABLE CODES/STANDARDS TO ENSURE VERTICAL AND LATERAL STABILITY OF THE STRUCTURE OR PORTION THEREOF DURING THE CONSTRUCTION.
- THE CONTRACTOR SHALL BE RESPONSIBLE FOR PROVIDING NECESSARY UNDERPINNING OR BRACING FOR EXISTING STRUCTURE OR PORTION THEREOF. STRUCTURAL ENGINEER IS NOT RESPONSIBLE FOR ANY DESIGN OR PROVISIONS OF ANY TEMPORARY STRUCTURES.
- DO NOT CHANGE SIZE OR DIMENSIONS OF STRUCTURAL ELEMENTS WITHOUT WRITTEN PERMISSION FROM STRUCTURAL ENGINEER.
- DO NOT SCALE THE DRAWINGS, USE DIMENSIONS SHOWN. COORDINATE AND VERIFY ALL DIMENSIONS WITH ARCHITECTURAL DRAWINGS. ARCHITECTURAL DRAWINGS SUPERCEDES ALL DIMENSIONS SHOWN IN THESE DRAWINGS.
- GENERAL CONTRACTOR IS RESPONSIBLE TO PERFORM ALL NECESSARY TESTINGS PER GOVERNING ASTM STANDARDS FOR SOIL, CONCRETE OR ANY OTHER MATERIALS INVOLVED IN THE PROJECT AND SHOP DRAWINGS OF SUCH DESIGN OR REPORTS OF TESTING SHALL BE SUBMITTED TO ARCHITECT/ENGINEER FOR RECORD AND APPROVAL. ALL SUCH DESIGN OR TEST RESULTS SHALL BE SIGNED AND SEALED BY LICENSED PROFESSIONAL IN STATE OR JURISDICTION WHERE THE PROJECT IS LOCATED.

CAST-IN-PLACE CONCRETE:

- CONCRETE DESIGN AND DETAILING SHALL CONFORM TO THE REQUIREMENTS OF ACI 318 AND ACI 301, LATEST EDITIONS. CONTRACTOR SHALL SUBMIT MIX DESIGNS ACCOMPANIED BY APPROPRIATE GRAPHS AND BACKGROUND DATA FOR APPROVAL. MIX DESIGN SHALL INDICATE 7 AND 28 DAYS STRENGTHS, CEMENT CONTENT, AIR CONTENT, WATER-CEMENT RATIO, AMOUNT OF FINE AND COARSE AGGREGATES, AND ADMIXTURES.
- ALL REINFORCING STEEL SHALL BE DEFORMED BILLET STEEL CONFORMING TO ASTM A615 GRADE 60 AND DETAILED, FABRICATED AND PLACED CONFORMING TO MANUAL OF STANDARD PRACTICE FOR DETAILING CONCRETE STRUCTURES (ACI 315)
- ALL WELDED WIRE FABRIC SHALL CONFORM TO ASTM A185. ALL MESH EDGES SHALL LAP A MIN. OF 2 SQUARES.
- CONCRETE COMPRESSIVE STRENGTHS AT 28 DAYS SHALL BE 3000 psi FOR FOOTINGS, FOUNDATION WALLS AND SLAB ON GRADE IN ENCLOSED SPACES & 3500 psi FOR HORIZONTAL SURFACES EXPOSED TO WEATHER.
- SLUMP AT THE POINT OF DISCHARGE IN TO THE FORMS SHALL BE 4" +/- 1" FOR VERTICAL ELEMENTS AND 6" +/- 1" FOR HORIZONTAL ELEMENTS.
- CAST-IN-PLACE CONCRETE SHALL BE READY-MIX PER ASTM C94.
- ALL CONCRETE EXPOSED TO WEATHER SHALL HAVE A MIN. AIR ENTRAINMENT OF 6% +/- 1% PER ACI 318-08; SECTION: 4.4.1.
- PROVIDE CORNER BARS AT ALL WALL AND FOOTING INTERSECTIONS AND MATCH CONTINUING REINFORCEMENT.
- SEE ARCHITECTURAL DRAWINGS FOR NECESSARY CONCRETE FINISHES.
- RESTRICT ADDITION OF MIX WATER AT THE JOB SITE. DO NOT ADD WATER WITHOUT APPROVAL OF THE INSPECTIONS ENGINEER AND DO NOT EXCEED SLUMP LIMITATIONS.
- ALL GROUTS SHALL BE PRE-MIXED NON-SHRINKABLE, NON-METALLIC FORMULA PRO CONFORMING TO ASTMC827, AND SHALL HAVE A SPECIFIED COMPRESSIVE STRENGTH OF 3000 psi WITHIN 24 HOURS AND 6000 psi AT 28 DAYS. PRE-GROUTING OF BASE PLATES WILL NOT BE PERMITTED.
- PROVIDE KEYED JOINTS BETWEEN ALL NON-MONOLITHIC INTERSECTING CONCRETE ELEMENTS AND JOINTS.
- CONTRACTOR SHALL VERIFY EMBEDDED ITEMS, INCLUDING BUT NOT LIMITED TO ANCHOR BOLTS, BOLT CLUSTERS, WELD PLATES etc. BEFORE PLACING CONCRETE. NOTIFY ENGINEER OF ANY CONFLICTS WITH REBAR.
- CONCRETE EXPOSED TO WEATHER SHALL BE AIR ENTRAINED. TOTAL AIR CONTENT (BY PERCENT OF CONCRETE VOLUME) SHALL BE NOT LESS THAN 5% OR MORE THAN 7%.
- GENERAL CONTRACTOR IS RESPONSIBLE FOR SUBMITTING SHOP DRAWINGS SIGNED AND SEALED BY REGISTERED DESIGN PROFESSIONAL THAT INCLUDES: 1. CONCRETE MIX DESIGN 2. DETAILED REINFORCEMENT SHOP DRAWINGS PER ACI 318 AND ACI DETAILING MANUAL. 3. FORM WORK, SHORING, RE-SHORING OR UNDERPINNING SHOP DRAWINGS AS REQUIRED FOR PROJECT.

REINFORCING STEEL:

- REINFORCING BARS SHALL BE DEFORMED BILLET STEEL CONFORMING TO ASTM A615. REINFORCING BARS SHALL BE GRADE 60, UNLESS NOTED OTHERWISE.
- PLAIN BARS FOR SPIRAL REINFORCEMENT SHALL CONFORM TO ASTM A 615, GRADE 60.
- PLAIN STEEL WELDED WIRE REINFORCEMENT SHALL CONFORM TO ASTM A185.
- WELDED DEFORMED STEEL BAR MATS FOR CONCRETE REINFORCEMENT SHALL CONFORM TO ASTM A184.
- BARS SHALL BE BRANDED BY THE MANUFACTURER WITH BAR SIZE AND GRADE OF STEEL AND CERTIFIED MILL REPORTS SHALL BE SUBMITTED FOR RECORD.
- REINFORCING STEEL SHALL BE DETAILED IN ACCORDANCE WITH THE ACI "MANUAL OF STANDARD PRACTICE FOR DETAILING REINFORCED CONCRETE STRUCTURES", LATEST EDITION.
- PROVIDE MINIMUM CLEAR CONCRETE COVER (a) FOR REINFORCEMENT AS SPECIFIED BELOW UNLESS SPECIFICALLY NOTED OTHERWISE ON THE PLANS:

DESCRIPTION			MIN. COVER (IN.)
CONCRETE CAST AGAINST AND PERMENANTLY EXPOSED TO EARTH			3"
CONCRETE EXPOSED TO EARTH OR WEATHER	#6 THROUGH #18 BARS		2"
	#5 BAR, W31 OR D31 WIRE AND SMALLER		1 1/2"
CONCRETE NOT EXPOSED TO EARTH OR WEATHER	SLAB, WALLS, JOISTS		3/4"
	BEAMS, COLUMNS (PRIMARY REINF., TIES, STIRRUPS, SPIRALS.		1 1/2"
	SHELLS, FOLDED PLATES	#6 BARS AND LARGER	3/4"
		#5 BAR, W31 OR D31 WIRE, AND SMALLER	1/2"

MASONRY:

- CONCRETE BLOCKS USED IN WALLS SHALL CONFORM TO ASTM C90. BRICK SHALL CONFORM TO ASTM C62 AND ASTM C216, AS APPLICABLE. MORTAR FOR BRICK VENEER AND OTHER MASONRY SHALL CONFORM TO ASTM C270, TYPE N. TYPE S MORTAR SHALL BE USED TYPICALL FOR ALL MASONRY, AND TYPE M MORTAR SHALL BE USED FOR BELOW GRADE MASONRY AND/OR MASONRY IN CONTACT WITH SOIL, U.N.O.
- HOLLOW LOAD BEARING UNITS SHALL CONFORM TO ASTM C90, NORMAL WEIGHT TYPE II WITH A MIN. NET COMPRESSIVE UNIT STRENGTH OF 1900 psi. (NET AREA COMPRESSIVE MASONRY STRENGTH fm' = 1500 psi)
- REINFORCED MASONRY WALLS SHALL BE BUILT SUCH THAT CELLS LINE UP VERTICALLY.
- FILLED CELLS SHALL BE FILLED WITH COARSE GROUT. COARSE GROUT SHALL CONFORM TO ASTM C476. PROPERTIES SHALL INCLUDE: 2500 psi AT 28 DAYS, 3/8" MAXIMUM AGGREGATE AND 8"-11" SLUMP. FILLED CELLS MAY ALTERNATIVELY BE FILLED WITH A 3000 psi PEA GRAVEL MIX CONCRETE. TEH PEA GRAVEL MIX SHALL BE PROPORTIONED WITH A MAXIMUM AGGREGATE SIZE OF 3/8" DIAMETER TO PROVIDE A MIN. OF 1/2" CLEARANCE, ADDITIONALLY, THE PEA GRAVEL MIX SHALL PROVIDE AN 8" TO 11" SLUMP.
- A CONTINUOUS REINFORCED CMU/CONCRETE BOND BEAM SHALL BE PROVIDED ON TOP OF EACH WALL. BOND BEAMS SHALL BE MIN. 8"x8" WITH CONTINUOUS (2) #4 REBARS.
- WHERE EXPANSION OR ANY OTHER ANCHORS ARE SHOWN, MASONRY CELLS SHALL BE FULLY GROUTED AT MINIMUM OF 8" ABOVE AND BELOW EACH EXPANSION ANCHOR OR ANY OTHER ANCHORS UNLESS NOTED OTHERWISE.
- UNLESS NOTED OTHERWISE ON PLANS, PROVIDE A MIN. OF (2) FULLY GROUTED COURSES BY 32" LENGTH AT ALL STRUCTURAL STEEL BEARING.
- VERTICAL REINFORCING BARS SHALL BE HELD IN POSITION WITH BAR POSITIONERS @ 8'-0" O.C., AT TOP AND BOTTOM OF BAR WITH MIN. CLEARANCE OF 1/2" FROM MASONRY. THE CLEAR DISTANCE BETWEEN BARS SHALL NOT BE LESS THAN ONE BAR DIAMETER NOR LESS THAN 1". CENTER BARS IN WALLS UNLESS NOTED OTHERWISE.
- REINFORCING BARS SHALL BE STRAIGHT EXCEPT FOR BENDS AROUND CORNERS.
- MIN. LAP SPLICE SHALL BE 36 BAR DIAMETERS. WIRE TIE LAP SPLICES.
- WHEN A FOUNDATION DOWEL DOESN'T LINE UP WITH A VERTICAL CORE. IT SHALL NOT BE SLOPED MORE THAN 1:6. DOWELS SHALL BE GROUTED IN TO A CORE IN VERTICAL ALIGNMENT, EVEN IF IT IS IN A CELL ADJACENT TO VERTICAL WALL REINFORCEMENT.
- HORIZONTAL WALL REINFORCING SHALL BE ZINC COATED COLD DRAWN TRUSS TYPE DUR-O-WALL (OR EQUIVALENT) CONFORMING TO ASTM A82 SPACED AT 16' O.C. MAX. HORIZONTAL JOINT REINFORCING SHALL CONSIST OF (2) 9 GA OR LARGER HORIZONTAL BARS WELD CONNECTED WITH 12 GA OR LARGER CROSS-WIRES. ZINC COATING CONFORM TO ASTM A116-73. LAP SPLICE JOINT REINFORCEMENT 12-INCHES MIN.
- PROVIDE HORIZONTAL JOINT REINFORCEMENT AT MASONRY OPENINGS SUCH AS DOORS AND WINDOWS. CONTINUE JOINT REINFORCING FOR THE FIRST AND SECOND BLOCK COURSE ABOVE AND BELOW MASONRY OPENING. EXTEND JOINT REINFORCING A MIN. OF TWO FEET BEYOND OPENINGS.
- CLEANOUTS SHALL BE PROVIDED IN THE BOTTOM COURSE OF MASNORY IN EACH GROUT POUR WHEN THE POUR HEIGHT EXCEEDS 5'. CLEANOUTS SHALL BE SAW-CUT 4" x 4".
- GROUT POUR HEIGHT SHALL NOT EXCEED 24'. PLACE GROUT IN 5' MAX. LIFTS HEIGHTS.
- CONSOLIDATE GROUT POURS AT THE TIME OF PLACEMENT BY MECHANICAL MEANS AND RECONSOLIDATE AFTER INITIAL WATER LOSS AND SETTLEMENT.
- STORE BLOCKS ON PALLETS AND COVER WITH VISQUEEN.
- PLACE ALL MASONRY IN RUNNING BOND WITH 3/8" MORTAR JOINTS. PROVIDE COMPLETE COVERAGE FACE SHELL MORTAR BEDDING HORIZONTAL AND VERTICALL FULLY MORTAR WEBS IN ALL COURSES OF PIERS, COLUMNS, AND PILASTERS AND ADJACENT TO GROUT CELLS.
- MASONRY CONTROL JOINTS SHALL BE INSTALLED AT LOCATIONS INDICATED ON DRAWINGS. ADDITIONALLY INSTALL MASONRY CONTROL JOINTS SPACE AT 26'-0" O.C.

STRUCTURAL STEEL:

- STRUCTURAL STEEL SHALL CONFORM TO THE LATEST EDITION OF THE AISC "SPECIFICATION FOR THE DESIGN, FABRICATION AND ERECTION OF STRUCTURAL STEEL FOR BUILDINGS".
- ALL W SHAPE STEEL SHALL CONFORM TO ASTM 992 (Fy = 50 KSI).
- ALL HOLLOW STRUCTURAL SECTIONS (HSS) SHALL CONFORM TO ASTM A500, GRADE B.
- ALL OTHER STRUCTURAL STEEL SHALL CONFORM TO ASTM A36 (Fy = 36 KSI).
- ALL ANCHOR BOLTS SHALL CONFORM TO ASTM A307 U.N.O.
- ALL HIGH STRENGTH BOLTS SHALL CONFORM TO ASTM A325 U.N.O.
- BOLTED CONNECTIONS SHALL USE HIGH STRENGTH BOLTS.
- BOLTS IN MOMENT FRAMES SHALL USE HIGH STRENGTH SLIP CRITICAL BOLTS. SLIP CRITICAL CONNECTIONS SHALL HAVE CONTACT SURFACES MEETING CLASS A SURFACE CONDITIONS.
- WELDED CONNECTIONS SHALL CONFORM TO THE LATEST EDITION OF AMERICAN WELDING SOCIETY CODE, AWS D11.
- ALL WELDED CONNECTIONS SHALL USE E70XX, LOW HIDROGEN ELECTRODES U.N.O. ELECTRODES SHALL BE PROTECTED FROM MOISTURE.
- BOLTED CONNECTIONS SHALL CONFORM TO THE REQUIREMENTS OF "SPECIFICATIONS FOR STRUCTURAL JOINTS USING ASTM A325 OR A490 BOLTS" AS APPROVED BY RESEARCH COUNCIL ON STRUCTURAL CONNECTIONS (RCSC). USE BEARING TYPE BOLTS WITH THREAD ALLOWED ACROSS THE SHEAR PLANE.
- ALL STEEL CONNECTIONS SHALL BE WELDED AROUND WITH 1/4" FILLET WELD UNLESS OTHERWISE NOTED, EXCEPT FOR SLOTTED CONNECTIONS.
- EXPANSION BOLTS SHALL BE GALVANIZED CARBON STEEL COMPONENTS, ZINC-PLATED TO COMPLY WITH ASTM B 633 AND FF-S 325, GROUP II, TYPE 4, CLASS I.
- FULL PENETRATION WELDS SHALL BE MADE AGAINST A 1/8" x 1" BACKER PLATE TACK WELDED IN PLACE BELOW THE WELD. PENETRATION WELDS SHALL BE EQUIVALENT IN DEPTH AND LENGTH TO THE PARTS JOINED.
- SUBMIT ALL STRUCTURAL STEEL/LIGHT GAGE SHOP DRAWINGS SIGNED AND SEALED BY A REGISTERED PROFESSIONAL ENGINEER. SHOP DRAWINGS SHALL INCLUDE MEMBER SIZES, MATERIAL SPECIFICATION, CONNECTIONS AND/OR ANY OTHER ITEMS REQUIRED BY GOVERNING BUILDING CODE OR JURISDICTION.
- NO FABRICATION SHALL BE STARTED PRIOR TO SHOP DRAWINGS APPROVAL.

STRUCTURAL LUMBER:

- WOOD CONSTRUCTION, INCLUDING LUMBER, CONNECTIONS, AND DETAILS SHALL COMPLY WITH THE REQUIREMENTS OF AMERICAN INSTITUTE OF TIMBER CONSTRUCTION AND THE NATIONAL FOREST AND PAPER ASSOCIATION'S CURRENT "NATIONAL DESIGN SPECIFICATION FOR WOOD CONSTRUCTION".
- ALL STRUCTURAL WOOD MEMBERS SHALL COMPLY WITH FOLLOWING MINIMUM DESIGN VALUES:

SPECIES		Fb	Ft (a)	Fv (a)	Fc ⊥ (a)	Fc ll (b)	E	Emin
HEMFIR #2		850 psi	525 psi	150 psi	405 psi	1300 psi	1300000 psi	470000 psi
SPF #2		875 psi	450 psi	135 psi	425 psi	1150 psi	1400000 psi	510000 psi
THICKNESS	WIDTH	SOUTHERN PINE #2						
2" TO 4"	2" TO 4"	1100 psi	675 psi	175 psi	565 psi	1450 psi	1400000 psi	510000 psi
	5" TO 6"	1000 psi	600 psi	175 psi	565 psi	1400 psi	1400000 psi	510000 psi
	8"	925 psi	550 psi	175 psi	565 psi	1350 psi	1400000 psi	510000 psi
	10"	800 psi	475 psi	175 psi	565 psi	1300 psi	1400000 psi	510000 psi
	12"	750 psi	450 psi	175 psi	565 psi	1250 psi	1400000 psi	510000 psi
MICROLAM LVL (ML)		2600 psi	1555 psi	285 psi	750 psi	2510 psi	1900000 psi	965710 psi
PARALLAM PSL 1.8E		2400 psi	1755 psi	190 psi	425 psi	2500 psi	1800000 psi	914880 psi
PARALLAM PSL 2.0E		2900 psi	2025 psi	290 psi	750 psi	2900 psi	2000000psi	1016535 psi
TIMBERSTRAND LSL1.3E		1900 psi	1075 psi	400 psi	680 psi	1400 psi	1300000psi	660750 psi
TIMBERSTRAND LSL1.55E		2325 psi	1070 psi	310 psi	800 psi	2050 psi	1550000psi	787815 psi

- ALL EXTERIOR WOOD MEMBERS EXPOSED TO WEATHER SHALL BE PRESSURE TREATED PER APPLICABLE CODES/STANDARDS.
- ALL FASTENERS/HARDWARE EXPOSED TO WEATHER OR IN CONTACT WITH TREATED WOOD SHALL BE HOT DIP GALVANIZED OR STAINLESS STEEL OR Z-MAX COATED OR APPROVED FOR SUCH USE BY MANUFACTURER.
- PREVENT DIRECT CONTACT OF INTERIOR WOOD WITH CONCRETE OR MASONRY. PROTECT ALL WOOD FROM MOISTURE BY APPLYING APPROVED WRAP AND AVOID DIRECT CONTACT WITH MASONRY OR CONCRETE.
- CONTRACTOR SHALL SUBMIT SHOP DRAWINGS FOR ENGINEER'S REVIEW AND APPROVAL PRIOR TO ORDERING JOISTS FOR CONSTRUCTION.
- FLOOR & ROOF FRAMING/DIRECTION SHOWN ON THE DRAWINGS ARE SCHEMATIC AND FOR REFERENCE ONLY AND SHALL NOT BE CONSIDERED AS SHOP DRAWINGS. SHOP DRAWINGS FROM MANUFACTRER SHALL BE FOLLOWED FOR JOIST/TRUSS PLACEMENTS.
- ALL MECHANICAL, PLUMBING ELECTRICAL OR ANY OTHER COMPONENTS FROM OTHER DISCIPLINES SHALL BE COORDINATED BY MANUFACTURER IN SHOP DRAWINGS AS WELL AS ON THE FIELD. NOTIFY ARCHITECT/STRUCTURAL ENGINEER IF ANY DESCRIPANCY OR CONFLICT FOUND.
- ALL STRUCTURAL FRAMING MEMBERS SUPPORTING FLOOR JOISTS/TRUSSES ARE DESIGNED BASED ON LAYOUT REPRESENTED ON DRAWINGS. ANY MODIFICATION, CHANGE OR ADDITION SHALL NOT BE DONE WITHOUT PRIOR APPROVAL BY ARCHITECT/ENGINEER. SHOP DRAWINGS SHALL BE SUBMITTED FOR REVIEW FOR ANY SUCH CHANGE.
- ROOF/FLOOR TRUSS MANUFACTURER SHALL PROVIDE NECESSARY BRACING TO WEB MEMBERS AS REQUIRED BY GOVERNING CODE/STANDARD.
- ALL ROOF SHEATHING SHALL BE APA RATED 7/16" C-C, C-D OR STRUCTURAL II WITH SPAN RATING OF 48/24 PER "AMERICAN PLYWOOD ASSOCIATION". PROVIDE MIN. NAILING PATTERN W/ 8d COMMON NAILS @ 6" O.C. ON EDGES AND 12" O.C. IN FIELD. PROVIDE PLYWOOD CLIPS AT PLYWOOD EDGES BETWEEN EACH FRAMING MEMBER.
- ALL FLOOR SHEATHING SHALL BE 3/4" THICK T&G APA RATED AND WITH SPAN RATING OF 48/24 OR STURD-I-FLOOR 24" O.C. RATED PLYWOOD SHALL BE GLUED AND NAILED. INSTALL 100% GLUE LINE AND MIN. NAILING PATTERN OF 10d COMMON NAILS @ 6" O.C. ON EDGE SUPPORTS AND 12" O.C. INTERMEDIATE SUPPORTS.
- ALL EXTERIR STUD WALL SHEATHING SHALL BE MIN. 7/16" APA RATED NAILED WITH 8d NAILS @ 6" O.C. ON EDGES AND 12" O.C. IN FIELD U.N.O. REFER TO SHEAR WALL SCHEDULE FOR MORE INFORMATION.
- ALL WOOD PLATE SPLICES SHALL BE STAGGERED AT 4'-0" MIN.
- PROVIDE MIN. (2) 2x12 UP TO 4'-0" SPAN, (2) ML10 FOR 4'-0" TO 6'-0" SPAN, (2) ML12 FOR 6'-0" TO 9'-0" SPAN WHERE HEADER/LINTEL/BEAM SIZES ARE NOT SPECIFIED ON PLANS. ANY SPANS LARGER THAN 9'-0" SUPPORITNG FRAMING MEMBERS (POSTS/BEAMS/BEARING WALLS) AND NOT SPECIFIED ON PLANS SHALL BE NOTIFIED TO ENGINEER IMMEDIATELY.
- PROVIDE MIN. DOUBLE JOISTS OR SPECIAL FLOOR TRUSS UNDER (2) 2x POSTS AND (2) PLY MICROLAM LVL OR SPECIAL FLOOR TRUSS TO MATCH FLOOR THICKNESS UNDER (3) 2x POSTS UNLESS NOTED OTHERWISE ON THE PLAN. CONTRACTOR SHALL NOTIFY ENGINEER FOR SUPPORTING STRUCTURAL MEMBER FOR ALL OTHER POST SIZES COMING FROM ABOVE.
- PROVIDE MIN. (3) 2x POSTS UNDER ALL BEAMS/GIRDER TRUSSES/HEADERS U.N.O. ON PLANS.
- PROVIDE SOLID BLOCKING WITHIN FLOOR SYSTEM FOR POSTS/JACKSTUDS COMING FROM ABOVE.
- ALL POSTS/JACKS SHALL CONTINUE DOWN TO FOUNDATION/STRUCTURAL MEMBERS SUCH AS BEAMS/GIRDERS/GIRDER TRUSSES. NOTIFY ENGINEER IF ANY DESCRIPANCY FOUND DURING CONSTRUCTION.
- PROVIDE DOUBLE JOISTS OR SPECIAL TRUSS UNDER ALL WALLS/PARTITIONS EXTEND 1/2 OR MORE OF FRAMING SPAN.
- PROVIDE BLOCKING BETWEEN TOP FLANGE/CHORD OF JOISTS/FLOOR TRUSS SUPPORTING PARTITION WALL FROM ABOVE.
- PROVIDE FULL HEIGHT BLOCKING BETWEEN FLOOR JOISTS/TRUSSES SUPPORTING BEARING WALL FROM ABOVE.
- ALL DIMENSION LUMBER SHALL BE DRESSED S4S AND SHALL BEAR GRADE STAMP OF THE MANUFACTURER'S ASSOCIATION.
- ALL LUMBER SHALL BE SEASONED AND FREE FROM WRAP.
- PROVIDE SOLID BLOCKING BETWEEN JOISTS AND RAFTERS AT ALL BEARING POINTS AND AT MIN. OF 8'-0" O.C.
- PROVIDE STRONG BACKS AT MIN. OF 10'-0" O.C. AT ALL FLOOR TRUSSES.
- PROVIDE CONTINUOUS RIM BOARD AT PERIMETER AND AT END BEARING WALLS WHEN I-JOISTS ARE USED FOR FLOOR FRAMING.
- PROVIDE MIN. 1 3/4" BEARING AT END AND 3 1/2" MIN. BEARING AT INTERMEDIATE SUPPORT WHEN I-JOISTS ARE USED FOR FLOOR FRAMING.
- PROVIDE WEB-STIFFENERS, SQUASH BLOCKS, BEARING BLOCKS, BLOCKING PANELS, FILLER BLOCKS, BACKER BLOCKS AS RECOMMENDED BY MANUFACTURER. REFER TO MANUFACTURER'S GUIDELINES FOR INSTALLATION AND FASTENING.
- PRE-ENGINEERED/PRE-FABRICATED WOOD ROOF/FLOOR TRUSSES SHALL BE IN ACCORDANCE WITH "DESIGN SPECIFICATIONS FOR METAL PLATE CONNECTED WOOD TRUSSES " BY "TRUSS PLATE IINSTUTE (TPI - I)"
- PROVIDE HURRICANE CLIPS TO RESIST UPLIFT AS SHOWN ON SHOP DRAWINGS. PROVIDE SIMPSON "H2.5" HURRICANE CLIP MIN.
- REFER & FOLLOW "BCSI" GUIDES B1 THRU B11 FOR HANDLING, INSTALLING, RESTRAINING AND BRACING OF METAL PLATE CONNECTED WOOD TRUSSES.
- INSTALLATION OF PRE-ENGINEERED/PRE-FABRICATED ROOF AND/OR FLOOR TRUSSES SHALL BE DONE PER TRUSS DESIGN DRAWINGS AND TRUSS ENGINEER SHALL BE RESPONSIBLE FOR PROVIDING ANY REPAIRS OR ALTERATIONS IN TRUSS CONFIGURATIONS.

EXISTING CONDITIONS:

- ALL EXISTING STRUCTURAL MEMBERS TO REMAIN INTACT UNLESS SPECIFICALLY NOTED TO BE REMOVED BY MOST RECENT DEMOLITION DOCUMENTS BY ARCHITECT OR OTHERWISE NOTED ON THESE DRAWINGS.
- ALL INFORMATION ON THESE DRAWINGS RELATED TO EXISTING CONDITIONS ARE PROVIDED BASED ON AVAILABLE CONTRACT DRAWINGS OR INFORMATION PER ARCHITECTURAL DRAWINGS. CONTRACTOR IS RESPONSIBLE FOR FIELD VERIFYING ALL EXISTING CONDITIONS AND NOTIFY STRUCTURAL ENGINEER IF ANY DISCREPANCY IS FOUND BETWEEN CONTRACT DRAWINGS AND EXISTING CONDITIONS.
- THE PORTION OF THE STRUCTURE THAT IS SHOWN TO BE STRUCTURALLY MODIFIED HAVE BEEN DESIGNED ACCORDING TO BEST ENGINEERING PRACTICE. HOWEVER WE DO NOT ASSUME RESPONSIBILITY FOR ANY DAMAGE THAT MAY ARISE FOR ANY PORTION OF THE BUILDING NOT REDESIGNED, ALTERED OR CONSTRUCTED UNDER THIS SET OF DESIGN DRAWINGS. WE DO NOT ASSUME ANY RESPONSIBILITY OR LIABILITY TOWARDS DEFICIENCIES IN THE CONDITION OF THE BUILDING PRIOR TO RENOVATION PER NEW CONTRACT DRAWINGS.
- CONTRACTOR SHALL FIELD VERIFY ALL DIMENSIONS PRIOR TO COMMENCEMENT OF ANY WORK.

WOOD FASTENERS/CONNECTORS:

- FASTENERS USED BELOW GRADE TO ATTACH PLYWOOD TO EXTERIOR WALLS OR CRAWL SPACE STUD WALLS OR KNEE WALL CONSTRUCTION OVER FOUNDATION SHALL BE TYPE 304 OR 316 STAINLESS STEEL.
- ALL MECHANICAL WOOD CONNECTORS SHALL BE CLEARLY SPECIFIED ON SHOP DRAWINGS SUPPLIED BY MANUFACTURER AND SHALL BE DESIGNED FOR APPROPRIATE LOAD AS REQUIRED BY GOVERNING CODE/JURISDICTION.
- ALL MECHANICAL CONNECTORS AND/OR FASTENERS INCLUDING NAILS/BOLTS/SCREWS EXPOSED TO CONCRETE/MASONRY/WEATHER SHALL BE HOT DIP GALVANIZED OR STAINLESS STEEL OR APPROVED BY MANUFACTURER FOR SUCH USE.
- BOLT HOLES SHALL BE A MIN. OF 1/32" TO A MAX. OF 1/16" LARGER THAN THE BOLT DIAMETER.
- A METAL PLATE OR WASHER NOT LESS THAN A STANDARD OVERSIZED CUT WASHER SHALL BE BETWEEN THE WOOD AND THE BOLT HEAD AND BETWEEN THE WOOD AND THE NUT.
- SNUG TIGHT ALL BOLTS. TIGHTEN CONNECTIONS WHICH HAVE LOOSENED DUE TO WOOD SHRINKAGE.
- INSTALL BOLTS TO EXCLUDE THREADED PORTIONS OF BOLTS FROM SHEAR PLANES.
- LAG SCREWS SHALL BE INSTALLED IN PRE-DILLED HOLES.
- THE CLEARANCE HOLE FOR THE SHANK SHALL HAVE THE SAME DIAMETER AS THE SHANK AND THE SAME DEPTH OF PENETRATION AS THE LENGTH OF THE SHANK.
- THE LEAD HOLE FOR THE THREADED PORTION SHALL HAVE A DIAMETER EQUAL TO 75% FOR SOUTHERN PINE, 70% FOR OTHER SPECIES OF THE SHANK DIAMETER AND A MIN. LENGTH EQUAL TO LENGTH OF THREADED PORTION.
- WOOD SILL PLATE SHALL BE ANCHORED TO CONCRETE/MASONRY W/ 1/2" DIA. ANCHOR BOLTS WITH MIN. 7" EMBEDMENT AND 6'-0" O.C. AND 12" MAX. FROM PLATE ENDS OR SPLICES. REFER TO MANUFACTURER'S RECOMMENDATIONS FOR ALTERNATE ANCHORS. REFER TO SHEAR WALL SCHEDULE FOR ADDITIONAL ANCHORAGE REQUIREMENTS. PROVIDE MIN. 3"x3" WASHERS TO ANCHOR BOLTS WITH ENGINEERED SHEAR WALLS (SW) ARE SPECIFIED ON DRAWINGS.
- REFER TO FASTENING SCHEDULE FOR MORE INFORMATION.

NOTES ON FASTENER SCHEDULE (IRC 2018 - TABLE R602.3(1)):

a. ALL NAILS ARE SMOOTH-COMMON, BOX OR DEFORMED SHANKS EXCEPT WHERE OTHERWISE STATED. NAILS USED FOR FRAMING AND SHEATHING CONNECTIONS SHALL HAVE MIN. AVERAGE BENDING YIELD STRENGTHS AS SHOWN 80 ksi FOR SHANK DIAMETER OF 0.192 INCHES, 90 ksi FOR SHANK DIAMETERS LARGER THAN 0.142 INCHES BUT NOT LARGER THAN 0.177 INCHES AND 100 ksi FOR SHANK DIAMETERS OF 0.142 INCHES OR LESS
b. STAPLES ARE 16 GAGE WIRE AND HAVE A MINIMUM 7/16 INCH ON DIAMETER CROWN WIDTH
c. NAILS SHALL BE SPACED AT NOT MORE THAN 6" O.C. AT ALL SUPPORTS WHERE SPANS ARE 48" OR GREATER
d. 4'-0" x 8'-0" OR 4'-0" x 9'-0" PANELS SHALL BE APPLIED VERTICALLY.
e. SPACING OF FASTENERS NOT INCLUDED IN THIS TABLE SHALL BE BASED ON TABLE R602.3(2) OF IRC 2018.
f. FOR REGIONS HAVING BASIC WIND SPEED OF 110 MPH OR GREATER 8d DEFORMED (2 1/2" x 0.120) NAILS SHALL BE USED FOR ATTACHING PLYWOOD AND WOOD STRUCTURAL PANEL ROOF SHEATHING TO FRAMING WITHIN MIN. 48" DISTANCE FROM GABLE END WALLS, IF MEAN ROOF HEIGHT IS MORE THAN 25'-0" UP TO 35'-0" MAXIMUM.
g. FOR REGIONS HAVING BASIC WIND SPEED OF 100 MPH OR LESS, NAILS FOR ATTACHING WOOD STRUCTURAL PANEL ROOF SHEATHING TO GABLE END WALL FRAMING SHALL BE SPACED 6" O.C. WHEN BASIC WIND SPEED IS GREATER THAN 100 MPH, NAILS FOR ATTACHING PANEL ROOF SHEATHING TO INTERMEDIATE SUPPORTS SHALL BE SPACED 6" O.C. FOR MIN. 48" DISTANCE FROM RIDGES, EAVES AND GABLE END WALLS; AND 4" O.C. TO GABLE END WALL FRAMING.
h. GYPSUM SHEATHING SHALL CONFORM TO ASTM C 1396 AND SHALL BE INSTALLED IN ACCORDANCE WITH GA 253. FIBERBOARD SHEATHING SHALL CONFORM TO ASTM C 208.
i. SPACING OF FASTENERS ON FLOOR SHEATHING PANEL EDGES APPLIES TO PANEL EDGES SUPPORTED BY FRAMING MEMBERS AND REQUIRED BLOCKING AND AT ALL FLOOR PERIMETERS ONLY. SPACING OF FASTENERS ON ROOF SHEATHING PANEL EDGES APPLIES TO PANEL EDGES SUPPORTED BY FRAMING MEMBERS AND REQUIRED BLOCKING. BLOCKING OF ROOF OR FLOOR SHEATHING PANEL EDGES PERPENDICULAR TO THE FRAMING MEMBERS NEED NOT BE PROVIDED EXCEPT AS REQUIRED BY OTHER PROVISIONS OF THE CODE. FLOOR PERIMETER SHALL BE SUPPORTED BY FRAMING MEMBERS OR SOLID BLOCKING.

ABBREVIATIONS:

ARCH=	ARCHITECTURAL
B.E.W=	BOTTOM EACH WAY
BM=	BEAM
BRG=	BEARING
COL=	COLUMN
CONC.=	CONCRETE
CONT=	CONTINUOUS
DBL=	DOUBLE
EA=	EACH
E.E.=	EACH END
EXP=	EXPANSION
EXT.=	EXTERIOR
FDN=	FOUNDATION
FTG=	FOOTING
G.T.=	GIRDER TRUSS
HDR=	HEADER
INT.=	INTERIOR
INFO	INFORMATION
J=	JACK STUD
MANUF=	MANUFACTURER
MIN=	MINIMUM
MAX=	MAXIMUM
ML=	MICROLAM
N.T.S=	NOT TO SCALE
O.C.=	ON CENTER
PLYWD=	PLYWOOD
P.T.=	PRESSURE TREATED
P.A. =	POST FROM ABOVE
REQD=	REQUIRED
S=	KING STUD
SPF=	SPRUCE PINE FIR
SP=	SOUTHERN PINE
STL=	STEEL
TYP=	TYPICAL
W/=	WITH
WD=	WOOD
WWF=	WELDED WIRE FABRIC
U.N.O.=	UNLESS NOTED OTHERWISE

REVIEWED
By Michael Kyne at 1:37 pm, May 23, 2022

APPROVED
Montgomery County
Historic Preservation Commission

NO.	DESCRIPTION OF BUILDING ELEMENT	FASTNERS
1	BLOCKING BETWEEN JOISTS OR RAFTERS TO TOP PLATE (TOE NAIL)	(3) 8d (2 1/2" x 0.113")
2	CEILING JOISTS TO PLATE (TOE NAIL)	(3) 8d (2 1/2" x 0.113")
3	CEILING JOISTS NOT ATTACHED TO PARALLEL RAFTER, LAPS OVER PARTIAIONS (FACE NAIL)	(3) 10d
4	COLLAR TIE RAFTER (FACE NAIL) OR 1 1/4" x 20 GAGE RIDGE STRAP	(3) 10d (3" x 0.128")
5	RAFTER TO PLATE (TOE NAIL)	(2) 16d (3 1/2" x 0.135")
6	ROOF RAFTERS TO RIDGE, VALLEY OR HIP RAFTERS TOE NAILS FACE NAILS	(4) 16d (3 1/2" x 0.135") (3) 16d (3 1/2" x 0.135")
7	BUILT-UP CORNER STUDS	10d (3" x 0.128") @ 24" O.C.
8	BUILT-UP HEADER, TWO PIECES W/ 1/2" SPACER	16d (3 1/2" x 0.135") @ 16" O.C. ALONG EACH EDGE
9	CONTINUED HEADER, TWO PIECES	16d (3 1/2" x 0.135") @ 16" O.C. ALONG EACH EDGE
10	CONTINUOUS HEADER TO STUD (TOE NAIL)	(4) 8d (2 1/2" x 0.113")
11	DOUBLE STUDS (FACE NAILS)	10d (3" x 0.128") @ 24" O.C.
12	DOUBLE TOP PLATES (FACE NAILS)	10d (3" x 0.128") @ 24" O.C.
13	DOUBLE TOP PLATES, MIN. 48" OFFSET OF END JOINSTS (FACE NAILS IN LAPPED AREA)	(8) 16d (3 1/2" x 0.135")
14	SOLE PLATE TO JOIST OR BLOCKING (FACE NAIL)	16d (3 1/2" x 0.135") @ 16" O.C.
15	SOLE PLATE TO JOIST OR BLOCKING (FACE NAIL) AT BRACED WALL PANELS	(3) 16d (3 1/2" x 0.135") @ 16" O.C.

NO.	DESCRIPTION OF BUILDING ELEMENT	FASTNERS
16	STUD TO SOLE PLATE (TOE NAIL)	(3) 8d (2 1/2" x 0.113") OR (2) 16d (3 1/2" x 0.135")
17	TOP OR SOLE PLATE TO STUD (END NAIL)	(2) 16d (3 1/2" x 0.135")
18	TOP PLATES, LAPS AT CORNERS AND INTERSECTIONS (FACE NAIL)	(2) 10d (3" x 0.128")
19	1" BRACE TO EACH STUD AND PLATE (FACE NAIL)	(2) 8d (2 1/2" x 0.113") OR (2) STAPLES 1 3/4"
20	1" x 6" SHEATHING TO EACH BEARING (FACE NAIL)	(2) 8d (2 1/2" x 0.113") OR (2) STAPLES 1 3/4"
21	1" x 8" SHEATHING TO EACH BEARING (FACE NAIL)	(2) 8d (2 1/2" x 0.113") OR (3) STAPLES 1 3/4"
22	WIDER THAN 1" x 8" SHEATHING TO EACH BEARING (FACE NAIL)	(3) 8d (2 1/2" x 0.113") OR (4) STAPLES 1 3/4"
23	JOIST TO SILL OR GIRDER (TOE NAIL)	(3) 8d (2 1/2" x 0.113")
24	1" x 6" SUBFLOOR OR LESS TO EACH JOIST (FACE NAIL)	(2) 8d (2 1/2" x 0.113") OR (2) STAPLES 1 3/4"
25	2" SUBFLOOR TO JOIST OR GIRDER (BLIND AND FACE NAIL)	(2) 16d (3 1/2" x 0.135")
26	RIM JOIST TO TOP PLATE (TOE NAIL) ROOF APPLICATOIN ALSO	8d (2 1/2" x 0.113") @ 6" O.C.
27	2" PLANKS (PLANK & BEAM - FLOOR & ROOF)	(2) 16d (3 1/2" x 0.135") @ E.E.
28	BUILT-UP GIRDERS & BEAMS, 2" LUMBER LAYERS	10d (3" x 0.128") NAIL EA. LAYER 32" O.C. AT TOP AND BOTT. STAGGERED. TWO NAILS AT ENDS AND AT EA. SPLICE.
29	LEDGER STRIP SUPPORTING JOISTS OR RAFTERS	(3) 16d (3 1/2" x 0.135") AT EACH JOIST OR RAFTER

NO.	BUILDING MATERIALS	DESCRIPTION OF FASTENERS	NAILING PATTERN	
			EDGES	INTERMEDIATE SUPPORTS
WOOD STRUCTURAL PANELS, SUBFLOOR, ROOF AND INTERIOR WALL SHEATHING TO FRAMING & PARTICLE BOARD WALL SHEATHING TO FRAMING				
30	3/8" - 1/2"	6d (2" x 0.113") COMMON NAIL (SUBFLOOR, WALL) (j) 8d (2 1/2" x 0.131") COMMON NAIL (ROOF)	6"	12" (g)
31	5/16" - 1/2"	6d (2" x 0.113") COMMON NAIL (SUBFLOOR, WALL) 8d (2 1/2" x 0.131") COMMON NAIL (ROOF) (f)	6"	12" (g)
32	19/32" - 1"	8d (2 1/2" x 0.131") COMMON NAIL	6"	12" (g)
33	1 1/8" - 1 1/4"	10d (3" x 0.148") COMMON NAIL OR 8d (2 1/2" x 0.131") DEFORMED NAIL	6"	12"
OTHER WALL SHEATHING (h)				
34	1/2" STRUCTURAL CELLULOSIC FIBERBOARD SHEATHING	1/2" GALVANIZED ROOFING NAIL, 7/16' CROWN OR 16 GA. STAPLE, 1" CROWN & 1 1/4" LONG	3"	6"
35	25/32" STRUCTURAL CELLULOSIC FIBERBOARD SHEATHING	1 3/4" GALVANIZED ROOFING NAIL, 7/16' CROWN OR 16 GA. STAPLE, 1" CROWN & 1 1/2" LONG	3"	6"
36	1/2" GYPSUM SHEATHING (d)	1 1/2" GALVANIZED ROOFING NAIL OR 1 1/2" LONG GALVANIZED STAPLES, OR 1 1/4" SCREWS TYPE W OR S.	7"	7"
37	1/2" GYPSUM SHEATHING (d)	1 3/4" GALVANIZED ROOFING NAIL OR 1 5/8" LONG GALVANIZED STAPLES, OR 1 5/8" SCREWS TYPE W OR S.	7"	7"
WOOD STRUCTURAL PANELS, COMBINATION OF SUBFLOOR UNDERLAYMENT TO FRAMING				
38	3/4" AND LESS	6d (2" x 0.120") DEFORMED NAIL OR 8d (2 1/2" x 0.131") COMMON NAIL	6"	12"
39	7/8" - 1"	8d (2 1/2" x 0.131") COMMON NAIL OR 8d (2 1/2" x 0.120") DEFORMED NAIL	6"	12"
40	1 1/8" - 1 1/4"	10d (3" x 0.148") COMMON NAIL OR 8d (2 1/2" x 0.120") DEFORMED NAIL	6"	12"

© COPYRIGHT 2016
Structural Engineering content of this drawings are property of structBIM LLC and are issued for this project only. Any re-use or re-production of these drawings shall not be done without written consent of structBIM LLC. These drawings are to be read in conjuction with project specifications and drawings from other consultants. These drawings shall not be used as shop drawings. Do not scale drawings, use dimensions as specified.

GTMARCHITECTS

7735 OLD GEORGETOWN ROAD
SUITE 700
BETHESDA, MD 20814
(240)333-2000
(240)333-2001 FAX
WWW.GTMARCHITECTS.COM

Seal

Consultant

structBIM ENGINEERS
WE DESIGN....WE BIM
46400 BENEDICT DR, SUITE #211
PHONE: 703-657-4481
E-MAIL: info@structBIM.com

Project

19 HIGH STREET, LOT 1
BROOKVILLE, MD 20833

I certify that these documents were prepared or approved by me, and that I am a duly licensed Professional Engineer under the laws of the State of Maryland, license number 40082, Expiration Date: 02-13-2023.

N

Issue Description	Date

structBIM Project No.	21-0243
Checked By	KK
Drawn By	KK
Scale	1/4" = 1'-0"

Sheet Title
GENERAL NOTES

Sheet No.
SG

COPYRIGHT, 2016 structBIMEngineers, LLC.
PLOTTED ON: 4/15/2022 12:45:47 PM

Ultimate Wind Speed (mph)		115							
BWL Designation		A-1		B-1		1-1		2-1	
No. of Floors above BWL		1		1		1		1	
BWP Method		CS-WSP		WSP		CS-WSP		CS-WSP	
Average BWL Spacing (ft)		31		31		50.33		50.33	
Tabular Requirement (ft)		9.25		10.80		14.10		14.10	
Adjustments	Exposure	B	1.00	B	1.00	B	1.00	B	1.00
	Eave-to-Ridge Ht. (ft)	15.00	1.15	15.00	1.15	15.00	1.15	15.00	1.15
	Max. Wall Ht. (ft)	9.00	0.95	9.00	0.95	9.00	0.95	9.00	0.95
	No. of BWLs	2	1.00	2	1.00	2	1.00	2	1.00
	Omit Interior Finish?	No	1.00	No	1.00	No	1.00	No	1.00
	Added Hold-downs?	No	1.00	No	1.00	No	1.00	No	1.00
	Joints Blocked?	Yes	1.00	Yes	1.00	Yes	1.00	Yes	1.00
	Fasteners @ 4" o.c.?	No	1.00	No	1.00	Yes	0.83	Yes	0.83
Required BWP Length (ft)		10.11		11.80		12.78		12.78	
Actual BWPs	BWP	Method	Length	Method	Length	Method	Length	Method	Length
Contributing Length (ft) WSP=actual SFB=actual GB(ss)=0.5xactual GB(db)=actual CS-PF=1.5xactual PFG=1.5xactual PF=4' A(B)=4'	1	CS-WSP	2.33	WSP	4.00	CS-WSP	2.75	CS-WSP	2.42
	2	CS-WSP	2.33	WSP	4.00	CS-WSP	4.00	CS-WSP	3.75
	3	CS-WSP	4.00	WSP	4.00	CS-WSP	4.00	CS-WSP	5.33
	4	CS-WSP	2.83	WSP	4.00	CS-WSP	2.75	CS-PF	2.50
	5	CS-WSP	2.08						
	6								
	7								
Actual BWP Length (ft)		13.57		16.00		13.50		14.00	
Actual ≥ Required?		PASS		PASS		PASS		PASS	
BWPs ≤ 20' Apart?		Yes		Yes		Yes		Yes	
≥ 2 Panels in BWL?		Yes		Yes		Yes		Yes	
BWP 10' from Ends?		Yes		Yes		Yes		Yes	
Continuous Sheathing End Conditions		End 1	End 2	End 1	End 2	End 1	End 2	End 1	End 2
		1	1	NA	NA	1	1	1	1
BWL Compliance		PASS		PASS		PASS		PASS	

REVIEWED
By Michael Kyne at 1:37 pm, May 23, 2022

APPROVED
Montgomery County
Historic Preservation Commission

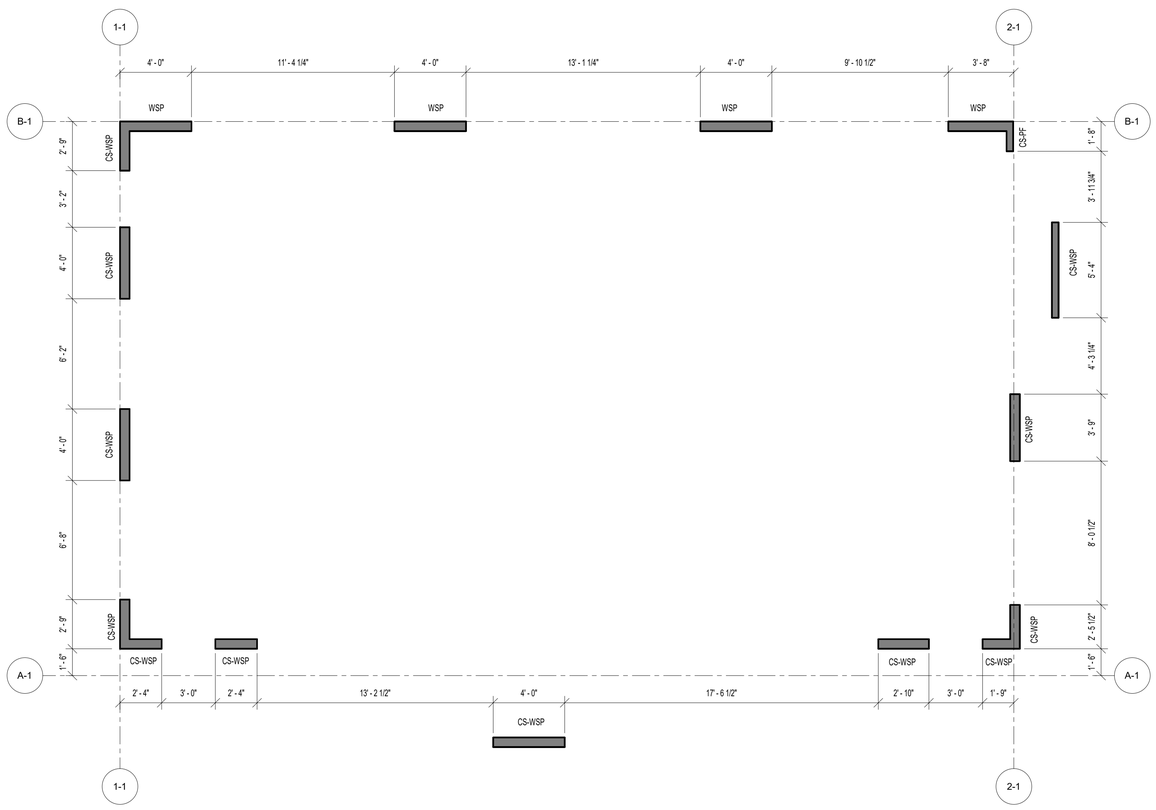

1 SWB1 FIRST FLOOR WALL BRACING PLAN
SCALE: 1/4" = 1'-0"

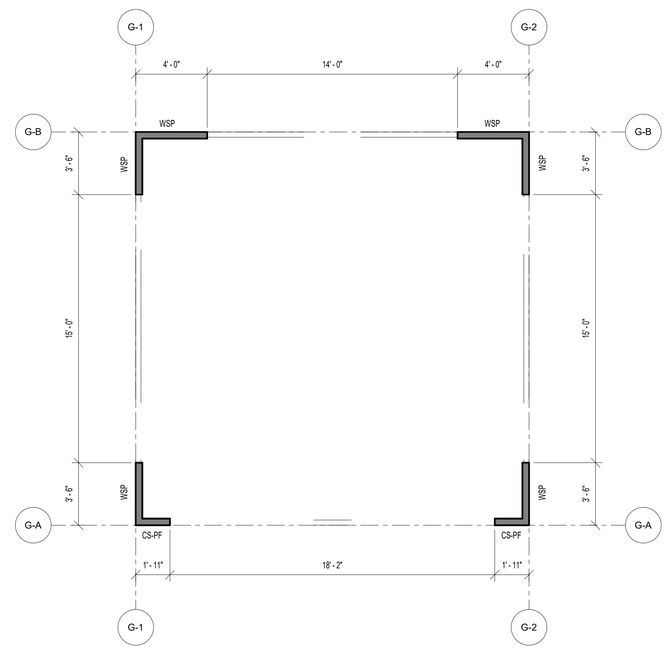

2 SWB1 FIRST FLOOR WALL BRACING PLAN @ GARAGE
SCALE: 1/4" = 1'-0"

PLAN LEGENDS & SYMBOLS:

- INDICATES BEARING WALL
- INDICATES DRAIN HOLE FROM ABOVE
- INDICATES JOIST/TRUSS HANEGR (REFER TO SHOP DWGS)
- INDICATES FRAMING DIRECTION
- INDICATES REBAR DIRECTION
- (_J+_S) — INDICATES NO. OF KING STUDS AT EACH END; INDICATES NO. OF JACK STUDS AT EACH END
- WF?? — INDICATES WALL FOOTING; WIDTH OF WALL FOOTING IN INCHES
- TS?? — INDICATES THICKENED SLAB; WIDTH OF THICKENED SLAB IN INCHES
- Fx.x — INDICATES ISOLATED COLUMN FOOTING; INDICATES SIZE OF FOOTING IN DECIMAL FEET
- ML?? — MICROLAM LVL 2.0E; DEPTH OF MICROLAM LVL IN INCHES
- LSL?? — LAMINATED STRAND LUMBER 1.7E; DEPTH OF TIMBERSTAND LSL BEAM IN INCHES
- PSL?? — PARALLAM STRAND LUMBER 2.0E; WIDTHxDEPTH OF MEMBER
- CC — COLUMN CAP
- CB — COLUMN BASE
- HD — HOLD DOWN ANCHOR
- MS — METAL STRAP
- H — JOIST/TRUSS/BEAM HANGER
- HC — HURRICANE CLIPS

WALL BRACING/SHEAR WALL SCHEDULE

MARK	DESCRIPTION	FASTENING PATTERN
CS-PF	7/16" APA RATED OSB SHEATHING	8d COMMON NAILS (2 1/2" x 0.131") @ 6" O.C. ON EDGES & 12" O.C. IN-FIELD
CS-WSP	7/16" APA RATED OSB SHEATHING	8d COMMON NAILS (2 1/2" x 0.131") @ 6" O.C. ON EDGES & 12" O.C. IN-FIELD
GB (BOTH SIDES)	1/2" GYPSUM WALL BOARD SHEATHING	1 1/2 " GALVANIZED ROOFING NAILS OR 1 1/2" GALVANIZED STAPLES OR 1 1/4" SCREWS TYPE W OR S @ 7" O.C. ON EDGES & IN-FIELD
GB (ONE SIDE)	1/2" GYPSUM WALL BOARD SHEATHING	1 1/2 " GALVANIZED ROOFING NAILS OR 1 1/2" GALVANIZED STAPLES OR 1 1/4" SCREWS TYPE W OR S @ 7" O.C. ON EDGES & IN-FIELD
WSP	7/16" APA RATED OSB SHEATHING	8d COMMON NAILS (2 1/2" x 0.131") @ 6" O.C. ON EDGES & 12" O.C. IN-FIELD

© COPYRIGHT 2016
Structural Engineering content of this drawings are property of structBIM LLC and are issued for this project only. Any re-use or re-production of these drawings shall not be done without written consent of structBIM LLC. These drawings are to be read in conjuction with project specifications and drawings from other consultants. These drawings shall not be used as shop drawings. Do not scale drawings, use dimensions as specified.

GTM ARCHITECTS

7735 OLD GEORGETOWN ROAD
SUITE 700
BETHESDA, MD 20814
(240)333-2000
(240)333-2001 FAX
WWW.GTMARCHITECTS.COM

Seal

STATE OF MARYLAND — KAMAL KHANNA — 40082 — PROFESSIONAL ENGINEER

Consultant

structBIM ENGINEERS
WE DESIGN....WE BIM
46400 BENEDICT DR, SUITE #211
PHONE: 703-657-4481
E-MAIL: info@structBIM.com

Project

19 HIGH STREET, LOT 1
BROOKVILLE, MD 20833

I certify that these documents were prepared or approved by me, and that I am a duly licensed Professional Engineer under the laws of the State of Maryland, license number 40082. Expiration Date: 02-13-2023.

Issue Description	*Date*

structBIM Project No.	21-0243
Checked By	KK
Drawn By	KK
Scale	1/4" = 1'-0"

Sheet Title
FIRST FLOOR WALL BRACING PLAN

Sheet No.
SWB1

COPYRIGHT, 2016 structBIMEngineers, LLC.

PLOTTED ON: 4/15/2022 12:45:48 PM

FILE NAME:

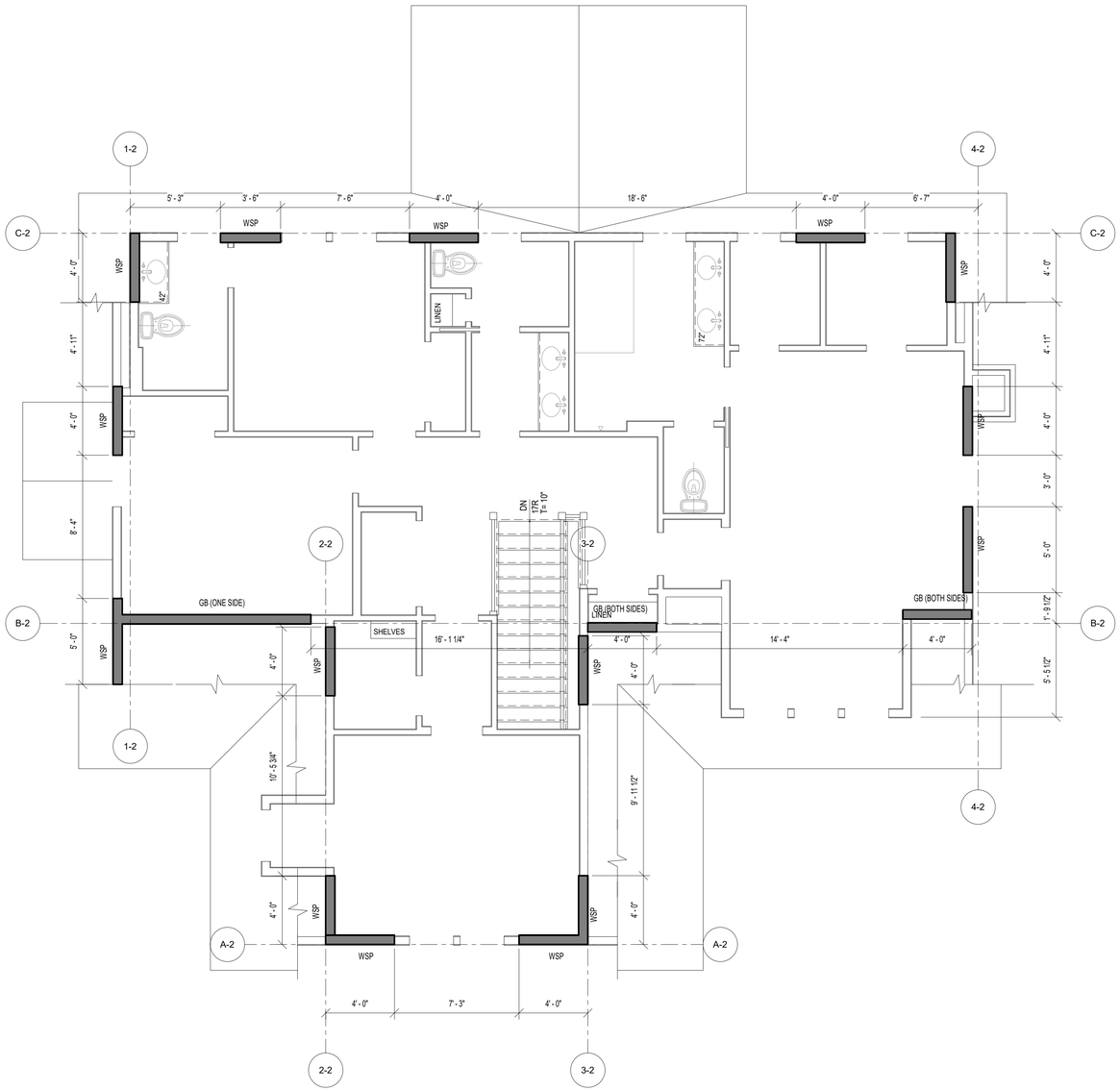

1 SWB2 SECOND FLOOR WALL BRACING PLAN

SCALE: 1/4" = 1'-0"

PLAN LEGENDS & SYMBOLS:

- INDICATES BEARING WALL
- INDICATES DRAIN HOLE FROM ABOVE
- INDICATES JOIST/TRUSS HANEGR (REFER TO SHOP DWGS)
- INDICATES FRAMING DIRECTION
- INDICATES REBAR DIRECTION
- (_J+_S) — INDICATES NO. OF KING STUDS AT EACH END; INDICATES NO. OF JACK STUDS AT EACH END
- WF?? — INDICATES WALL FOOTING; WIDTH OF WALL FOOTING IN INCHES
- TS?? — INDICATES THICKENED SLAB; WIDTH OF THICKENED SLAB IN INCHES
- Fx.x — INDICATES ISOLATED COLUMN FOOTING; INDICATES SIZE OF FOOTING IN DECIMAL FEET
- ML?? — MICROLAM LVL 2.0E; DEPTH OF MICROLAM LVL IN INCHES
- LSL?? — LAMINATED STRAND LUMBER 1.7E; DEPTH OF TIMBERSTAND LSL BEAM IN INCHES
- PSL?? — PARALLAM STRAND LUMBER 2.0E; WIDTHxDEPTH OF MEMBER
- CC — COLUMN CAP
- CB — COLUMN BASE
- HD — HOLD DOWN ANCHOR
- MS — METAL STRAP
- H — JOIST/TRUSS/BEAM HANGER
- HC — HURRICANE CLIPS

REVIEWED
By Michael Kyne at 1:37 pm, May 23, 2022

APPROVED
Montgomery County
Historic Preservation Commission

WALL BRACING/SHEAR WALL SCHEDULE

MARK	DESCRIPTION	FASTENING PATTERN
CS-PF	7/16" APA RATED OSB SHEATHING	8d COMMON NAILS (2 1/2" x 0.131") @ 6" O.C. ON EDGES & 12" O.C. IN-FIELD
CS-WSP	7/16" APA RATED OSB SHEATHING	8d COMMON NAILS (2 1/2" x 0.131") @ 6" O.C. ON EDGES & 12" O.C. IN-FIELD
GB (BOTH SIDES)	1/2" GYPSUM WALL BOARD SHEATHING	1 1/2 " GALVANIZED ROOFING NAILS OR 1 1/2" GALVANIZED STAPLES OR 1 1/4" SCREWS TYPE W OR S @ 7" O.C. ON EDGES & IN-FIELD
GB (ONE SIDE)	1/2" GYPSUM WALL BOARD SHEATHING	1 1/2 " GALVANIZED ROOFING NAILS OR 1 1/2" GALVANIZED STAPLES OR 1 1/4" SCREWS TYPE W OR S @ 7" O.C. ON EDGES & IN-FIELD
WSP	7/16" APA RATED OSB SHEATHING	8d COMMON NAILS (2 1/2" x 0.131") @ 6" O.C. ON EDGES & 12" O.C. IN-FIELD

© COPYRIGHT 2016
Structural Engineering content of this drawings are property of structBIM LLC and are issued for this project only. Any re-use or re-production of these drawings shall not be done without written consent of structBIM LLC. These drawings are to be read in conjuction with project specifications and drawings from other consultants. These drawings shall not be used as shop drawings. Do not scale drawings, use dimensions as specified.

GTM ARCHITECTS

7735 OLD GEORGETOWN ROAD
SUITE 700
BETHESDA, MD 20814
(240)333-2000
(240)333-2001 FAX
WWW.GTMARCHITECTS.COM

GTM

Seal

STATE OF MARYLAND — KENDAL KANDAL — 40082 — PROFESSIONAL ENGINEER

Consultant

structBIM ENGINEERS
WE DESIGN....WE BIM
46400 BENEDICT DR, SUITE #211
PHONE: 703-657-4481
E-MAIL: info@structBIM.com

Project

19 HIGH STREET, LOT 1
BROOKVILLE, MD 20833

I certify that these documents were prepared or approved by me, and that I am a duly licensed Professional Engineer under the laws of the State of Maryland, license number 40082, Expiration Date: 02-13-2023.

Issue Description	*Date*

structBIM Project No.	21-0243
Checked By	KK
Drawn By	KK
Scale	1/4" = 1'-0"

Sheet Title
SECOND FLOOR WALL BRACING PLAN

Sheet No.

SWB2

COPYRIGHT, 2016 structBIMEngineers, LLC.

PLOTTED ON: 4/15/2022 12:45:50 PM

FILE NAME:

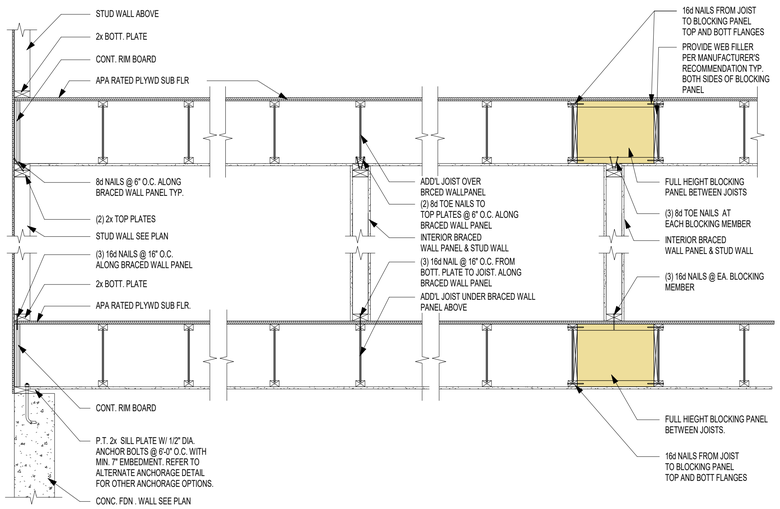

3 / SWB3 BRACED WALL PANEL PARALLEL TO I-JOISTS
SCALE: 3/4" = 1'-0"

WALL BRACING/SHEAR WALL SCHEDULE		
MARK	DESCRIPTION	FASTENING PATTERN
CS-PF	7/16" APA RATED OSB SHEATHING	8d COMMON NAILS (2 1/2" x 0.131") @ 6" O.C. ON EDGES & 12" O.C. IN-FIELD
CS-WSP	7/16" APA RATED OSB SHEATHING	8d COMMON NAILS (2 1/2" x 0.131") @ 6" O.C. ON EDGES & 12" O.C. IN-FIELD
GB (BOTH SIDES)	1/2" GYPSUM WALL BOARD SHEATHING	1 1/2 " GALVANIZED ROOFING NAILS OR 1 1/2" GALVANIZED STAPLES OR 1 1/4" SCREWS TYPE W OR S @ 7" O.C. ON EDGES & IN-FIELD
GB (ONE SIDE)	1/2" GYPSUM WALL BOARD SHEATHING	1 1/2 " GALVANIZED ROOFING NAILS OR 1 1/2" GALVANIZED STAPLES OR 1 1/4" SCREWS TYPE W OR S @ 7" O.C. ON EDGES & IN-FIELD
WSP	7/16" APA RATED OSB SHEATHING	8d COMMON NAILS (2 1/2" x 0.131") @ 6" O.C. ON EDGES & 12" O.C. IN-FIELD

REVIEWED
By Michael Kyne at 1:37 pm, May 23, 2022

APPROVED
Montgomery County
Historic Preservation Commission

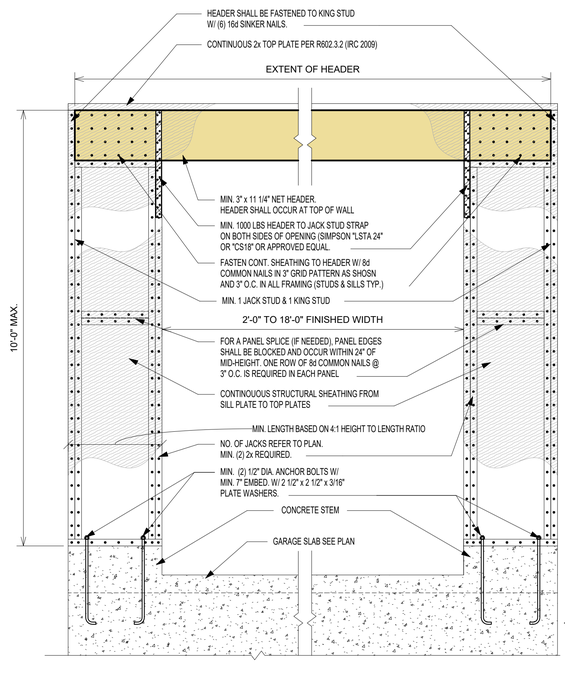

ELEVATION VIEW

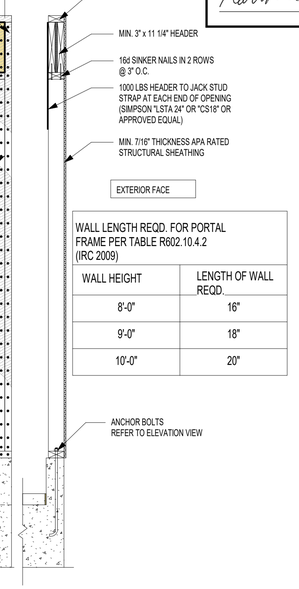

WALL LENGTH REQD. FOR PORTAL FRAME PER TABLE R602.10.4.2 (IRC 2009)	
WALL HEIGHT	LENGTH OF WALL REQD.
8'-0"	16"
9'-0"	18"
10'-0"	20"

SECTION VIEW

1 / SWB3 PORTAL FRAME @ GARAGE (PFG) LEFT SIDE ONLY
SCALE: 3/4" = 1'-0"

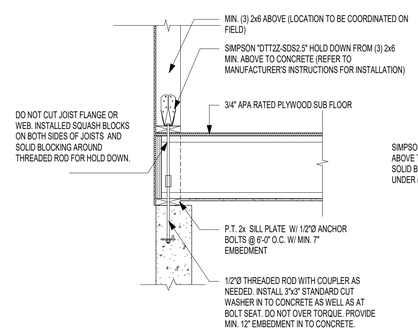

HOLD DOWN OPTION WITH SIMPSON "DTT2Z"

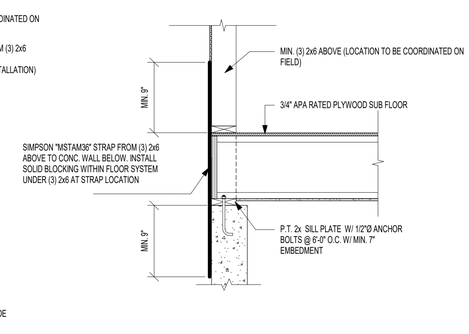

HOLD DOWN OPTION WITH SIMPSON "MSTAM36"

2 / SWB3 TYP. HOLD DOWN DETAILS (APPLY AT CORNERS < 24")
SCALE: 3/4" = 1'-0"

© COPYRIGHT 2016
Structural Engineering content of this drawings are property of structBIM LLC and are issued for this project only. Any re-use or re-production of these drawings shall not be done without written consent of structBIM LLC. These drawings are to be read in conjuction with project specifications and drawings from other consultants. These drawings shall not be used as shop drawings. Do not scale drawings, use dimensions as specified.

GTM ARCHITECTS
7735 OLD GEORGETOWN ROAD
SUITE 700
BETHESDA, MD 20814
(240)333-2000
(240)333-2001 FAX
WWW.GTMARCHITECTS.COM
GTM

Seal

STATE OF MARYLAND · MICHAEL KANE · 40082 · PROFESSIONAL ENGINEER

Consultant

structBIM ENGINEERS
WE DESIGN....WE BIM
46400 BENEDICT DR, SUITE #211
PHONE: 703-657-4481
E-MAIL: info@structBIM.com

Project

19 HIGH STREET, LOT 1
BROOKVILLE, MD 20833

I certify that these documents were prepared or approved by me, and that I am a duly licensed Professional Engineer under the laws of the State of Maryland, license number 40082. Expiration Date: 02-13-2023.

N

Issue Description	*Date*

structBIM Project No.	21-0243
Checked By	KK
Drawn By	KK
Scale	3/4" = 1'-0"

Sheet Title
WALL BRACING DETAILS & SCHEDULE

Sheet No.
SWB3

COPYRIGHT, 2016 structBIMEngineers, LLC.
PLOTTED ON: 4/13/2022 12:45:56 PM

FILE NAME:

23 HIGH STREET, LOT 2
BROOKVILLE, MD 20833

PLAT DATA

ADDITION TO BROOKE GROVE
LOT 2
PARCEL 770
OLNEY 8TH ELECTION DISTRICT
MONTGOMERY COUNTY, MD

TOWN OF BROOKEVILLE:
ZONED: HISTORIC VILLAGE RESIDENTIAL

FRONT SETBACK= 15'
SIDE SETBACKS= 8'
REAR SETBACK= 40'

15,000 SF (0.344 ACRES)

BUILDING TO BE FULLY SPRINKLERED IN ACCORDANCE WITH 2018 IRC & NFPA13D

GRAPHIC SYMBOLS

- SECTION SHEET NO. (A / A-5)
- SECTIONAL DETAIL SHEET NO. (A / A-5)
- DETAIL TARGET, ENLARGEMENT SHEET NO. (A / A-5)
- EXTERIOR ELEVATION SHEET NO. (N / A-12)
- INTERIOR ELEVATION SYMBOL DRAWING NO. SHEET NO. (N / W / 2 / E / A-12 / S)
- ELEV. 42.00 — DATUM ELEVATION
- 106 — ROOM NUMBER
- 4 — DOOR NUMBER
- W1 — WINDOW TYPE
- SF1 / A-6 — STOREFRONT ELEVATION
- 1 — REVISION NUMBER
- P1 — PARTITION TYPES SEE SCHEDULE
- T — TEMPERED GLASS

LIST OF DRAWINGS

001	COVER SHEET
002	SPECIFICATIONS
003	DOOR & WINDOW SCHEDULES
EC001	THERMAL ENVELOPE DIAGRAMS
EC002	THERMAL ENVELOPE DIAGRAMS
EC003	ENERGY CALCULATIONS
SITE	SITE-ZONING COMPLIANCE PLAN
A100	BASEMENT PLAN
A101	FIRST FLOOR PLAN
A102	SECOND FLOOR PLAN
A103	ROOF PLAN
A200	FRONT ELEVATION
A201	RIGHT SIDE ELEVATION
A202	REAR ELEVATION
A203	LEFT SIDE ELEVATION
A300	BUILDING SECTION
A301	BUILDING SECTION
A302	BUILDING SECTION
A303	BUILDING SECTION
A304	TYPICAL DETAILS
A305	DETAILS
A306	DETAILS
A307	DETAILS
A700	GARAGE FLOOR PLANS
A701	GARAGE ELEVATIONS
A702	GARAGE SECTIONS & DETAILS
S0	FOUNDATION PLAN
S1	FIRST FLOOR FRAMING PLAN
S2	SECOND FLOOR FRAMING PLAN
S3	ROOF FRAMING PLAN
S4	GARAGE FRAMING PLAN
SD0	FOUNDATION DETAILS
SD0.1	FOUNDATION DETAILS
SD0.1	FOUNDATION DETAILS
SD1	FRAMING DETAILS
SD2	FRAMING DETAILS
SD3	FRAMING DETAILS
SG	GENERAL NOTES
SWB1	FIRST FLOOR WALL BRACING PLAN
SWB2	SECOND FLOOR WALL BRACING PLAN
SWB3	WALL BRACING DETAILS & SCHEDULE

CALCULATIONS

BASEMENT:	
FINISHED:	1,478.9 SF
UNFINISHED:	101.8 SF
TOTAL:	1,580.7 SF
FIRST FLOOR:	1,674.5 SF
COVERED PORCHES:	229.8 SF
SECOND FLOOR:	1,578.7 SF
DETACHED GARAGE:	484 SF
TOTAL GFA:	5,547.7 SF
HOUSE FOOTPRINT:	1,925.7 SF

LOT COVERAGE:

MONTGOMERY COUNTY
LOT= 15,000 SF
15,000 SF- 6,000 SF= 9,000 SF
9,000 SF x .001= 9.0%
30%- 9%= 21% MAX COVERAGE (3,150 SF)
2,158.5 SF/ 15,000 SF= 14.4%

MATERIAL SYMBOLS

- EARTH
- CONCRETE
- STEEL
- BRICK
- FINISH WOOD
- CONCRETE MASONRY UNIT
- ROUGH LUMBER BLOCKING
- GYPSUM SHEATHING
- SLAT BOARD
- ACOUSTICAL TILE

ABBREVIATIONS

ABOVE FINISH FLOOR	AFF	EACH	EA	INTERIOR	INT	PLATE	PL	VERTICAL	VERT
ACOUSTIC	ACST	EAST	E			PLUMBING	PLMB	VESTIBULE	VEST
ADJUSTABLE	ADJ	ELECTRIC, ELECTRICAL	ELEC	JANITOR'S CLOSET	JC	PLYWOOD	PLYWD	VINYL COMPOSITE TILE	VCT
AIR CONDITIONING	A/C	ELEVATION	EL	JOINT	JT	POLYVINYL CHLORIDE	PVC	VOLTS	V
AIR HANDLING	AH	ELEVATOR	ELEV	JOIST	JST	POUND	LB		
AIR HANDLING UNIT	AHU	EMERGENCY POWER	EM	JUNCTION BOX	JB	POUNDS PER SQUARE INCH	PSI	WALLBOARD	WB
ALTERNATE	ALT	EMPTY CONDUIT	EC			PREFABRICATED	PREFAB	WELDED WIRE FABRIC	WWF
ALTERNATE CURRENT	AC	ENGINEER	ENGR	LAMINATED	LAM	PREFINISHED	PREFIN	WIDTH	W
ALUMINUM	AL	ELECTRIC WATER COOLER	EWC	LAVATORY	LAV	PRELIMINARY	PRELIM	WINDOW	WDW
AMPERES	AMP	EXHAUST	EXH	LEFT HAND	LH			WITH	W/
ANCHOR BOLT	AB	EXISTING	EX	LENGTH	L	QUARRY TILE	QT	WITHOUT	W/O
ARCHITECT	ARCH	EXPANSION	EXP	LIBRARY	LIB			WOOD	WD
AT	@	EXPANSION JOINT	EXP JT	LINEAR FEET	LF	RADIUS	RAD, R		
AVERAGE	AVG	EXTERIOR	EXT	LONG LEG HORIZONTAL	LLH	REFRIGERATOR	REF	YARD	YD
				LONG LEG VERTICAL	LLV	REINFORCING	REINF		
BEAM	BM	FAHRENHEIT	F			REQUIRED	REQD		
BOARD	BD	FEET PER MINUTE	FPM	MAINTENANCE	MAINT	RESILIENT	RES		
		FEET, FOOT	FT	MANUFACTURER	MFR	RETURN AIR	RA		
CABINET	CAB	FINISH	FIN	MASONRY	MAS	REVISION	REV		
CATALOG	CAT	FIRE EXTINGUISHER CAB.	FEC	MASONRY OPENING	MO	RIGHT HAND	RH		
CEILING	CLG	FLOOR	FL	MAXIMUM	MAX	ROOM	RM		
CENTERLINE	CL	FLUORESCENT	FLOUR	MECHANICAL	MECH	ROUGH OPENING	RO		
CERAMIC TILE	CT	FIRE RATED	FR	MEDIUM	MED				
CLOSET	CLO			MEZZANINE	MEZZ	SCHEDULE	SCHD		
COLUMN	COL	GAUGE	GA	MINIMUM	MIN	SECTION	SECT		
COMPANY	CO	GALLON	GAL	MISCELLANEOUS	MISC	SERVICE SINK	SS		
CONCRETE	CONC	GALLONS PER MINUTE	GPM	MOUNTED	MTD	SIMILAR	SIM		
CONCRETE MASONRY UNITS	CMU	GALVANIZED	GALV	MULLION	MUL	SOUND TRANSMISSION	STM		
CONFERENCE	CONF	GENERAL CONTRACTOR	GC			SPECIFICATION	SPEC		
CONTINUOUS	CONT	GROUNDED FAULT INTERUPT.	GFI	NOT IN CONTRACT	NIC	SQUARE	SQ		
CONTROL JOINT	C.J	GYPSUM	GYP	NOT TO SCALE	NTS	STANDARD	STD		
COORDINATE	COORD	GYPSUM WALLBOARD	GWB	# , NO		STAND PIPE	ST		
CORRIDOR	CORR			NUMBER		STAINLESS STEEL	SS		
CUBIC FEET	CF	HANDICAPPED	HDCP	OFFICE	OFF	STATION	STA		
CUBIC FEET PER MINUTE	CFM	HARDWARE	HDW	ON CENTER	OC	STEEL	STL		
		HARDWOOD	HDWD	OPENING	OPNG	STORAGE	STOR		
DEDICATED	DED	HEIGHT	HGT, H	OPPOSITE	OPP	STRUCTURAL	STRUCT		
DEPARTMENT	DEPT	HERTZ	HZ	OUNCE	OZ	SUSPENDED CEILING	SUSP		
DEPTH	D	HOLLOW METAL	HM	OVERALL	OA				
DETAIL	DET	HORIZONTAL	HORIZ	OVERHEAD	OH	TELEPHONE	TEL		
DIAGONAL	DIAG	HORSE POWER	HP			THICK OR THICKNESS	THK		
DIAMETER	DIA	HOT WATER HEATER	HWH	PAINTED	PTD	THRESHOLD	THRSLD		
DIMENSION	DIM	HOUR	HR	PANEL	PNL	TILE	T		
DISHWASHER	DW			PARTITION	PTM	TO BE SELECTED	TBS		
DOOR	DR	INCH	IN	PERPENDICULAR	PERP	TONGUE & GROOVE	T & G		
DOWN	DN	INFORMATION	INFO	PERSONAL COMPUTER	PC	TOP	T		
DRAWING	DWG	INSIDE DIAMETER	ID	PHASE	PH	TYPICAL	TYP		
DRINKING FOUNTAIN	DF	INSULATED, INSULATION	INSUL	PLASTIC LAMINATE	P LAM				

PROJECT INFORMATION

CLIENT/CONTRACTOR
PHIL SARDELIS
10776 TUCKER STREET
BELTSVILLE, MD 20705
240-417-5333
philsardelis@gmail.com

ARCHITECT
GTM ARCHITECTS
CONTACT: LUKE OLSON/NATE WHITE
7735 OLD GEORGETOWN ROAD
BETHESDA, MD 20814
(240) 333-2021
(240) 333-2070 FAX
lolson@gtmarchitects.com

CIVIL ENGINEER
CAS ENGINEERING
CONTACT: JARED SIMS CARHART, PD, MSE
10 SOUTH BENTZ STREET
FREDERICK, MD 21701
301-703-2346 (O)
303-217-1152 (C)
jcarhart@casengineering.com

STRUCTURAL ENGINEER
structBIM ENGINEERS
CONTACT: KAUSHAL KANSARA, P.E.
20130 LAKEVIEW CTR. PLZ.
SUITE 400
ASHBURN, VA 20147
(703) 405-9732 (C)
kaushal@structbim.com

PLANS PREPARED BASED ON THE FOLLOWING CODES:
INTERNATIONAL RESIDENTIAL CODE 2018

GTM ARCHITECTS

7735 OLD GEORGETOWN ROAD
SUITE 700
BETHESDA, MD 20814
(240)333-2000
(240)333-2001 FAX
WWW.GTMARCHITECTS.COM

Seal

STATE OF MARYLAND — LUKE M. OLSON — 3195 — ARCHITECT

I certify that these documents were prepared or approved by me, and that I am a duly licensed architect under the laws of the State of Maryland, license number 3195. Expiration Date: 12/06/2022

Consultant

Project

23 HIGH STREET
LOT 2

23 HIGH STREET, BROOKEVILLE, MD 20833

Owner

Developer

PERMIT SET	4-11-2022

Issue Description	*Date*

GTM Project No.	18.0320
Checked By	GTM
Drawn By	LEO/NW
Scale	AS NOTED

Sheet Title

COVER SHEET

Sheet No.

001

COPYRIGHT, 2022 GTM ARCHITECTS, INC.

FILE NAME:

SPECIFICATIONS FOR RESIDENTIAL CONSTRUCTION

The purpose of the following specifications is to establish the level of quality required for both materials and workmanship. These notes are intended as a general outline; specific and additional requirements are indicated on the drawings. Unless noted otherwise in the contract documents, all Products and Materials shall be installed in strict compliance with the manufacturer's recommendations. The contractor should also note that not all of the items mentioned below may apply to the project.

GENERAL REQUIREMENTS

1. All work shall conform to the International Residential Code (IRC), 2018 edition and all applicable sections of the Montgomery County code for single family construction and applicable building codes including (but not limited to) IECC 2018.
2. The General Contractor shall stake off area of new construction and designate trees and shrubs for removal as required. Protect all landscaping beyond the areas of construction.
3. The General Contractor shall coordinate phasing and time limits for new construction with the Owner, so as to establish an acceptable payment schedule related to the status of the project.
4. Any permits required for the project shall be obtained by the General Contractor, unless informed otherwise by the Architect that the permit has been obtained.
5. The General Contractor shall store materials and equipment in a safe and suitable place during the construction process. The Owner is not responsible for any losses of material. The contractor shall be responsible for damage to installed and (or) stored materials until substantial completion or as otherwise noted in the contract document.
6. All debris shall be periodically removed from the site so as to not create a physical or visual hazard to the Owner.
7. The General Contractor shall be licensed in Montgomery County, Maryland, and shall guarantee the project labor and materials for a period of one year after the Architect determines the work to be substantially complete, as per county laws.
8. The General Contractor shall provide competent daily supervision of the project.
9. The General Contractor shall notify the related authorities for inspection of the work as related to the specific areas required by the county.
10. The General Contractor shall Carry Workmen's Compensation Insurance for every person employed by him on the premises and shall maintain such insurance in full force during the entire time of this contract. The General Contractor shall carry Comprehensive General and Automotive Liability Insurance of $25,000 to $50,000 minimum. These requirements can be amended by the Owner if specified by the contract.
11. All drawings, specifications, and copies furnished by the Architect are the documents for the construction of this project only and shall not be used in any other circumstance.
12. The General Contractor shall carefully study the contract documents and report to the Architect any error, omission, or inconsistency they may discover.
13. The General Contractor shall provide and pay for all labor, materials, equipment, tools, machinery and other facilities and services necessary for proper execution and completion of the work, and shall guarantee no mechanic liens against the project at completion.
14. The Contract Sum is stated in the agreement and is the total amount payable by the Owner, which designates the addition, deletion, or revision to the contract. The Change Order must also designate the change in the original contract sum.
15. At least seven days before the date of each progress payment established by the agreement, the General Contractor shall submit to the Architect and Owner an itemized application designating which portion of the work has been completed.
16. The Contractor shall verify dimensions prior to construction, and all discrepancies shall be brought to the attention of the Architect so that clarifications can be made. The Contractor shall field verify all dimensions related to existing conditions. Written dimensions take precedence over scaled sizes. Do not scale drawings to determine missing dimensions.
17. The Contractor shall be responsible to have new utility line services (gas, electric, telephone) installed to the house connection/meter location.

DEMOLITION NOTES

1. Every care shall be taken during demolition to protect the house by means of temporary supports and braces as necessary to prevent any structural failure during removal and replacement of existing structural members.
2. Temporary walls and dust barriers shall be installed as necessary to prevent circulation of dirt and dust into portions of the house that are not part of the work.
3. All dashed walls, fixtures, windows, etc., are to be removed. See Demolition Sheets for additional information.
4. Conduct all demolition operations in compliance with applicable codes and ordinances.
5. Coordinate demolition with work of subcontractors.
6. Maintain the existing structure in a watertight condition at all times.
7. Provide the necessary enclosures to allow the owner to maintain comfortable temperatures within the occupied portions of the home during construction.

GENERAL STRUCTURAL NOTES

1. Work shall be done in accordance with the International Residential Code (IRC), 2018 Edition.
2. The design gravity live loads are as follows:
   - Roof load (snow): 30 LL + 15 DL = 45 PSF
   - Living Spaces: (1st Floor) 40 LL + 15 DL = 55 PSF
   - Sleeping Spaces: (2nd Floor) 30 LL + 15 DL = 45 PSF
   - Exterior Decks: 60 LL + 15 DL = 75 PSF
   - Live Load Deflection Limitation for floors and stairs shall be L/360
   - Live Load Deflection Limitation for roofs shall be L/240

FOUNDATIONS

1. The foundation for the structure has been designed for the assumed bearing pressure of 1,500 PSF. This is to be verified by the contractor prior to the footings being poured. It is also assumed that there is no water condition present.
2. Basement walls have been designed for an assumed equivalent fluid pressure of 55 PSF.
3. Excavations for spread footings and continuous footings shall be cleaned and hand tamped to a uniform surface.
4. Slabs on grade shall be underlaid by a minimum of 4" of granular material having a maximum aggregate size of 1.5 inches and no more than 2% fines. Prior to placing the granular material, the floor subgrade shall be properly compacted, proofrolled, free of standing water, mud, and frozen soil. Before placement of concrete, a (min. 6 mil poly) vapor barrier shall be placed on top of the granular fill and sealed to vertical foundation walls.
5. Bottoms of all exterior footings shall be 2'-6" minimum below finished grade. Footings shall project a minimum of 12" into undisturbed existing natural ground having allowable bearing capacity stated. Depths of footings subject to change if soil conditions are other than assumed.

ENERGY CONSERVATION

1. The following provisions for thermal resistance meet or exceed the requirements stipulated by the 2018 International Energy Conservation Code (IECC), climate zone 4A. These values are the minimum acceptable. See drawings for specific values required for the project.
2. Insulation

		IECC
A.	Ceiling (of uppermost story)	R-49, or R-38 continuous
B.	Vaulted Ceiling sf or 20% of total insulated ceiling area R-30 allowance	R-49 w/lesser of 500
C.	Frame walls (with storm window or double glazing)	R-20 or 13+5 (exterior)
D.	Rim Joists	Equal to wall below
E.	Floors over unheated spaces (including floor overhangs)	R-38
F.	Masonry walls (enclosed heated living areas)	R-13 or R-10 continuous
G.	Slab on grade (heated space) 24" Perimeter Insulation	R-10
H.	Windows	U-0.32 SHGC-0.40
I.	Doors	See section R402.3.4

3. Air Infiltration
   - A. Provide ¼" x 5.5" compressible sill sealer between foundation wall and all sill plates. Sill sealer shall be set such that no gaps exist at sealer butt joints.
   - B. Windows: Not exceeding three tenths (0.3) CFM of sash crack
   - C. Sliding glass doors: not exceeding three tenths (0.3) CFM per square foot of door area
   - D. Swinging doors: Not exceeding five tenths (0.5) CFM per square foot of door area. Provide 1" compressible sill sealer between foundation wall and all sill plates.
   - E. Building thermal envelopes shall be tested per IECC R402.4.1.2 and verified as having air leakage not to exceed 3 air changes per hour.
   - F. Recessed lighting in the thermal envelope shall comply with IECC R402.4.5
   - G. Systems duct and piping installation shall comply with IECC R403 including Whole-House Mechanical Ventilation system installation.

TERMITE CONTROL SOIL TREATMENT

1. Treat soil with Bayer Corporation, Premise 75, in strict accordance with manufacturer's recommendations.
2. Remove all extraneous sources of wood cellulose and other edible materials such as wood debris, tree stumps and roots, stakes, formwork, and construction waste wood from soil within and around foundations. Loosen, rake, and level soil to be treated except previously compacted areas under slabs and footings.
   - A. Slabs-on-Grade and Basement Slabs: Under ground-supported slab construction, including footings, building, slabs, and attached slabs as an overall treatment. Treat soil materials before concrete footings and slabs are placed.
   - B. Foundations: Adjacent soil including soil along the entire inside perimeter of foundation walls, along both sides of interior partition walls, around plumbing pipes and electric conduit penetrating the slab, and around interior column footers, piers, and chimney bases; also along the entire outside perimeter, from grade to bottom of footing. Avoid soil washout around footings.
   - C. Crawlspaces: Soil under and adjacent to foundations as previously indicated. Treat adjacent areas including around entrance platform, porches, and equipment bases. Apply overall treatment only where attached concrete platform and porches are on fill or ground.Crawlspaces used as plenum spaces strictly follow manufacturer's recommendedations.
   - D. Along driplines of roof overhangs without gutters.
   - E. Where condensate lines from mechanical equipment drip or drain to soil.
   - F. At plumbing penetrations through ground-supported slabs.
   - G. Other sites and locations as determined by licensed installer.

WARRANTY

Special Warranty: Manufacturer's standard form, signed by Applicator and Contractor certifying that termite control work, consisting of applied termiticide treatment, will prevent infestation of subterranean termites. If subterranean termite activity or damage is discovered during warranty period of five (5) years from Substantial Completion, re-treat soil and repair or replace damage caused by termite infestation.

CONCRETE

1. All concrete construction shall conform to the latest A.C.I. code 332 and shall comply with ACI 117, "Specifications for Tolerances for Concrete Construction and Materials" unless modified by requirements in the Contract Documents.
2. Concrete shall have natural sand fine aggregates and normal weight coarse aggregates conforming to ASTM C33, Type 1 Portland Cement conforming to ASTM 150, and shall have a minimum 28-day compressive strength (F/C) as follows:
   - F/C = 2,500 PSI for footings, interior slabs on grade (except garages) and fill in concrete blocks
   - F/C = 3,000 PSI for foundation walls exposed to weather.
   - F/C = 3,500 PSI for drives, porches, walks, steps, and garage slabs.
   - F/C = 4,000 PSI for precast concrete units.
3. All poured in place concrete exposed to weather conditions, including the garage floor, shall be air entrained by 6% of concrete volume. No calcium chloride or other admixtures shall be used except as approved in writing by the Owner.
4. Slabs on grade: except where otherwise noted, shall be min. 4" thick, reinforced with 6x6 W1.4xW1.4 WWF Lap mesh 6" in each direction. Slab shall be placed on a layer of 6 mil polyethylene, sealed to fdn. walls, over a 4" layer of washed gravel. Refer to drawings for location of thermal insulation.
5. Concrete finish: Exposed exterior steps, stoops and slabs shall first have a steel trowel finish and then a very light broom finish. Exposed interior and garage shall receive a steel trowel finish.
6. Expansion joints: Non-organic, Owner approved, expansion joint material shall be cast in place where slabs abut masonry or concrete walls to prevent bonding between the two materials.
7. Curing: Exposed concrete surfaces shall be sealed with an approved chemical curing compound within one hour of the final troweling. Curing compound label shall state that its use will not interfere with adhesion of subsequent floor finishes.
8. Reinforcing steel: Reinforcing steel for the ties shall be intermediate grade deformed billet steel conforming to ASTM spec. A615-40. All other reinforcing steel shall conform to ASTM spec. A615-60. Welded wire fabric to conform to ASTM A-185. Fabric shall be supplied in flat sheets and lapped to mesh at splices. All reinforcing shall be detailed, fabricated and installed in accordance with the latest detailing manual A.C.I. 315.
9. Reinforcement designated as "continuous" shall lap 36 bar diameters at splices unless noted otherwise.
10. Horizontal footing and walls: reinforcement shall be continuous and shall have 90 degree bends and extensions, or corner bars of equivalent size lapped 36 bar diameters, at corners and intersections.
11. Footings:
    - A. Bottom of footings shall extend a minimum of 2'-6" below any surface subject to freezing: footings shall extend at least 12" into undisturbed soil or set on controlled compacted fill. Depth of footing subject to change if soil conditions are other than assumed. Bearing value of soil is assumed to be 1,500 PSF with no water condition present. Minimum bearing value of controlled fill shall be certified by a licensed geotechnical engineer.
12. Anchor bolts: set anchor bolts or approved straps as shown. Bolts for wood sill plates shall be ½" in diameter and project 8" into concrete; set straps or bolts 12" max from end of any plate and 6'-0" max O.C. spacing, unless shown otherwise.

MASONRY

1. Brick shall conform to ASTM C-62. Mortar shall conform to federal specifications SS-C-18IE-type II. Lay brick only when outside temperature is 45° F and rising. Protect all work from cold and frost and ensure that mortar will cure without freezing. Calcium chloride and antifreeze admixture will not be acceptable.
2. Bearing steel and wood beams shall be supported on solid masonry piers as indicated. Other structural members (lintels, etc.) shall be supported on 8" of solid masonry. All beams and lintels shall have minimum horizontal bearing of 4".
3. Anchor bolts: Set anchor bolts or approved anchor straps as required. Bolts for wood sill plates shall be ½" diameter and project 16" into masonry. Set bolts or straps 12" max. from end of any plate.
4. CMU walls shall have horizontal wire joints reinforcement at 16" O.C. vertically, or as indicated.
5. Provide 4" solid masonry on all sides of joists or beams entering masonry party walls.
6. Brick Veneer:
   - A. Secure brick veneer with 16 GA hot-dipped zinc coated wall ties at 16" O.C. horizontally and vertically.
   - B. Provide flashing at first course above grade, at lintels, sills and elsewhere as shown. Provide $\frac{3}{16}$" diameter tube weeps or cellular plastic head joint-type weeps at 24" O.C.
   - C. Provide through-wall flashing above all unsheltered openings. Flashing shall be end-dammed at all terminations.
   - D. Install high-density polyethylene or polyester cavity drainage material, equal to "mortar net," above all flashing. Material shall be sized to fill the width of the cavity.
7. Stone Veneer:
   - A. Vapor permeable weather-resistive barriers: two-ply asphalt saturated Kraft Grade D breather type sheathing paper.
     - Basis of design is FortifiberΦ / two-ply super jumbo texΦ 60 minute
     - Reference standard; federal specification W-B-790A, Type I, Grade D, Style 2
     - Moisture vapor transmission: 35 grams minimum; ASTM E 96
     - Water resistance: 150 minutes (Professional), ASTM D 779
8. C.M.U.'s to have water repellent block admixture; 'Dry-Block' by W.R. Grace recommended.
9. Exterior mortar to have water repellent admixture.
10. Unless noted otherwise, tool all joints concave.
11. Fully bed in mortar face shells and webs of first course of CMU.
12. All masonry joints shall be fully filled with mortar, including head joints.

ADHERED MASONRY VENNER

1. The adhered Masonry Veneer (AMV) system shall be installed in compliance with IRC R703.12 and ASTM C1780 "Standard Practice for Installation Methods for Cement-based Adhered Masonry Veneer" and The Masonry Veneer Manufacturers Associations (MVMA) "Installation Guide and Detailing Options for Compliance with ASTM C1780". The cladding unit manufacturers installation recommendations are also to be followed.
2. Two separate layers of Water Resistant Barrier (WRM) shall be provided over the sheating substrate.
3. Galvanized lath shall be securely fastened to the wall structure with approved fasteners. A mortar scratch coat shall fully encapsulate the lath and have a scored surface.
4. Cladding units shall be set over a fully cured mortar scratch coat. Cladding units shall be adjusted to comply with the cladding unit manufacturers recommendations and ASTM C1780. Doors and windows shall be adjusted to provide proper operation of opening.
5. Joints shall be filled with "thumb-print hard" adhesive mortar with a slightly concave profile, unless noted otherwise. Prior to joint filling a field mock-up shall be provided for color and workmanship approval.

STEEL

1. Structural steel shall conform to ASTM A36
2. Steel beams shall conform to ASTM A572 Grade 50.
3. All steel angles, lintels, beams, columns, etc. are to be shop primed with red lead or red oxide primer or approved equal. Structural steel at or below grade shall be painted with two coats on an asphaltic base paint and protected with a minimum of 2" solid masonry or concrete.
4. For all openings or recesses in brick or brick-faced masonry walls not specifically detailed, provide one steel angle for each 4" of wall thickness. Provide lintels according to the schedule below:

Lintel	Masonry Opening	Min. Bearing
L 3-1/2 X 3-1/2 X 1/4	Up to 3'-0"	4"
L 3-1/2 X 3-1/2 X 5/16	3'-1" to 4'-0"	6"
L 4 X 3-1/2 X 1/4	4'-1" to 5'-0"	6"
L 4 X 3-1/2 X 5/16	5'-1" to 6'-0"	6"
L 5 X 3-1/2 X 5/16	6'-1" to 7'-0"	8"
L 6 X 4 X 3/8	7'-1" to 8'-0"	8"

Note: For openings greater than 8'-0", consult with Architect and Engineer.

WOOD & CARPENTRY

1. Unless otherwise noted on drawings, all structural wood members shall be #2 Southern Pine or equal, with the following combination of unit stresses:

Extreme fiber stress in bending	1,200 PSI
Compression parallel to the grain	1,000 PSI
Compression perpendicular to the grain	565 PSI
Modulus of Elasticity Shear Stress	1,500,000 PSI

Installation Tolerance; walls - a maximum out-of-plumb limit of 1/4" in 10' vertically and horizontal in-plane misalignment of 1/8" from adjacent framing shall be achieved. Plates and floors shall be installed within a 1/4" maximum tolerance for straightness relative to the intended location.

2. Manufactured joists and trusses (if shown on drawings) must be designed and certified by a licensed engineer and submitted to the Architect and local building department for approval.
3. Roof rafters and/or trusses shall be connected at each bearing point with one prefab-90 PSI galvanized rafter tie (hurricane clip) by Simpson or approved equal. Similarly, floor joists and trusses shall be connected with one prefabricated joist hanger. Each anchor shall be 18 GA minimum thick.
4. Provide double joists under all parallel partitions, at joists that support headers, and at headers that support joists. Use joist hangers where applicable.
5. All joists and rafters shall be rigidly braced at intervals not exceeding 8'-0".
6. Double studs at header bearing, double joists and rafters at all openings according to schedule below (unless noted otherwise on drawings):
   - Double 2 x 4 Up to 3'-0"
   - Double 2 x 6 Up to 4'-0"
   - Double 2 x 8 Up to 5'-0"
   - Double 2 x 10 Up to 7'-0"
   - Double 2 x 12 Up to 8'-0"

   All double headers and joists shall be joined with a minimum of two rows of 16 d nails 12" on center.
7. Provide blocking, banding, crush blocks, stiffeners, or rim joists, as required, at joist ends.
8. Floor joists shall have a minimum bearing of 2" on framed walls. All beams shall have minimum bearing of 4" bearing on all supports. Provide moisture protection to end of beams pocketed into masonry walls.
9. Wood joists, studs, and beams shall not be cut or notched unless authorized by the Architect. Drilled holes shall be centered at mid-depth of the member and the hole diameter shall not exceed ⅓ the actual depth of the member. No holes shall be drilled within 2' from the ends or within the middle ⅓ of the span. Provide 4" clear between holes.
10. Existing conditions shall be verified by the Contractor. Any existing damaged wood members shall be identified and replaced by the Contractor.
11. Contractor shall be responsible for providing necessary bracing and shoring of existing members and walls while altering the structure.
12. Provide 2x4 intermediate blocking at all bearing and non-bearing partitions.
13. All plywood shall be APA span rated. Use exterior grade plywood wherever edge of face will be exposed to weather. Interior plywood exposed to weather during construction shall be Exposure I min.
    - A. Exterior wall sheathing shall be ½" plywood unless noted otherwise.
    - B. Subflooring shall be ¾" tongue and groove plywood, glued and screwed to the floor joists as per APA recommendations.
    - C. Where spacing of roof structure members is 16" O.C., roof sheathing shall be ½" plywood (¾" where roofing is slate or tile). Where spacing of roof structure members is 24" O.C., roof sheathing shall be ⅝" plywood (¾" where roofing is slate or tile). Provide "H" clips at butt joints of roof sheathing.
14. MICRO-LAM L.V.L. (laminated veneer lumber) beams shall be manufactured by Trus Joist MacMillan or approved equal. Beams shall be installed according to manufacturer's recommendations. When fastening two or more beams together, provide a minimum of two rows of 16 d nails 12" on center.
15. TJI Floor Joists are to be manufactured by Trus Joist MacMillan or approved equal. Install per manufacturer's recommendations.
16. The following wood elements are to be pressure treated with preservative, bearing the AWPA standard use category label UC3B or UC4B (for ground contact):
    - A. Sill plates resting on concrete or masonry walls.
    - B. Sill plates resting on concrete slabs on grade.
    - C. Joists which enter concrete or masonry walls and have less than ½" clearance on tops, sides, and ends.
    - D. Sleepers resting directly on concrete slabs.
    - E. Exterior porch and deck framing, decking, and stairs.
17. Fasteners, hangers, and metal accessories used in pressure treated wood construction shall be type 304 or 316 stainless steel. Treated lumber shall not be placed in contact with aluminum flashing or other aluminum components.
18. Exterior Wood Trim:
    - A. All exterior wood trim shall be clear pine or redwood.
    - B. All trim shall be primed on 6 sides (including cut ends) prior to installation.
    - C. All outside corners shall be mitered and no end grain shall be exposed to view. No butt joints will be accepted
19. Exterior Synthetic Trim shall be "AZEK," with traditional smooth surface. Fasteners, joint cement, and installation procedures shall be in accordance with manufacturer's recommendations.
20. Siding: Refer to drawings for type specified.
    - A. Cement board shall be non-asbestos fiber-cement material complying with ASTM Standard Specification C1186 Grade II, Type A. Materials shall be equal to those manufactured by James Hardie Building Products.
    - B. Wood siding and sidewall Shingles shall be kiln dried Western Red Cedar, "Clear V.G. Heart" grade for clear and transparent stain finishes, and "A Clear" grade for semi-transparent stain or opaque finishes. Semi-transparent stain or opaque finish shall be applied in strict accordance to manufacturer's recommendations; including, but not limited to, substrate preparation and primer/sealer application to all wood surfaces (6-sides). Fasteners shall generally be type 304 stainless steel, but shall be type 316 for coastal applications. Install wood siding and shingle products over "Cedar Breather" by Benjamin Obdyke Inc. and 30# felts in accordance with manufacturer's instructions. Siding installation and finishing shall be as recommended by the Western Red Cedar Lumber Association. Siding shall be sealed prior to installation, fasteners shall be concealed where possible or arranged in a uniform pattern.
21. Coordinate all floor and wall framing with ductwork. Refer to mechanical notes.
22. Folding Attic Access Ladder shall be 22 ½" x 44" with self-trimming flange, pre-finished door panel, and gas-piston counterbalance. The door panel shall have continuous integral weatherstripping, R-10 insulation, and two key operated locking pins to draw the door tight. Ladder steps shall be pine, doweled to pine stringers. Contact Resource Conservation Technology at 410-366-1146. Additional insulation hood shall be provided to meet required insulation value per IECC R402.2.4.

DOORS AND WINDOWS

1. AWI "Custom Standard" shall apply to the workmanship, installation and finishing of wood doors and windows components.
2. The tops, bottoms, and edges of all doors shall be finished.
3. Any defects that prevent the door or window from serving its intented purpose satisfactorily shall be rejected, such as material that is crooked, warped, bowed, chatter marked, plane or tool marked, chipped, or otherwise defective.
4. Doors and windows shall be adjusted to provide proper operation of opening.

RADON DETECTION AND TREATMENT

1. The Contractor shall provide a venting system consisting of a minimum of 3" diameter ABS, PVC or equivalent gas-tight plumbing pipe inserted into the sub-slab gravel base (at all new concrete slabs). A 'T' fitting or equivalent method shall be used to ensure that the pipe opening remains with the sub-slab permeable material. The pipe shall terminate at least 12" above the high side of the roof penetration. Contractor shall coordinate location of pipe with Architect prior to installing the pipe.
2. Install, per IRC, 2018 edition, Appendix F 'Radon Control Methods.'
3. The Contractor shall provide any other measures as required by local codes.

VENTILATION

1. Where attics are indicated to be ventilated, they are to be vented in one of the following ways (refer to drawings for specifics):
   - A. Continuous ridge venting and continuous soffit venting. Ridge vent shall be by Cor-A-Vent or approved equal. Continuous screen soffit vents shall be a minimum of 2" wide. Circular louver vents between each rafter may be used at the soffit if shown on the drawings.
   - B. Screen louvers or vents with an open area equal to one square foot for every 300 square feet of attic space.
2. Provide foundation vents for all crawl spaces. Refer to drawings for locations.
3. Venting for appliances and exhaust fans:
   - A. Provide venting to the exterior as per manufacturer's recommendations for all appliances. Location of ductwork and vent on exterior shall be approved by Architect prior to installation.
   - B. Provide exhaust fans for bathrooms, etc., as shown on drawings. Location of ductwork and vent on exterior shall be approved by Architect prior to installation. Ducts within unconditioned spaces shall be insulated to prevent condensation.
4. Provide Whole-House ventilation system to comply with IECC R403.4

MOISTURE PROTECTION

1. Appropriate sealants shall be selected for each substrate depending upon location (interior or exterior), humidity, moisture conditions, and traffic conditions. Use primers as required.
2. Color of caulking shall be coordinated with adjacent materials and must be approved by Architect prior to application.
3. Joint fillers shall be used:
   - A. To control the depth of sealants in joints.
   - B. To meet the requirements for resilient separations in horizontal joints in floor, pavements, patios, sidewalks, and other light traffic areas.
4. Bond breakers shall be used to prevent adhesion to more than two surfaces.
5. Masonry foundations shall be parged to a thickness of ¾" minimum.
6. Waterproof all below grade foundation walls with a polymer-modified asphalt emulsion similar to TREMCO "TUFF-N-DRI Classic". Dry/ cured membrane thickness shall be minimum 40 mil. Installation and substrate preparation shall be per manufacturer's recommendations. Install subsurface drainage composite similar to CETCO "Aquadrain 10X" over the cured membrane with asphalt emulsion adhesive similar to Henry 111 Insulbond.
7. Footing drains shall be min. 4" in diameter and installed on the exterior of all foundations.
8. All flashing shall be installed according to the building code. An eave flashing strip of 40 mil. self-adhering rubberized asphalt sheet membrane shall be applied to extend from the edge of the roof to a point 24" min. inside the interior wall line of the structure, and at all valleys.
9. All membrane roofing to be approved by Architect prior to installation.
10. All roof shingles to be approved by Architect prior to installation.
11. Asphalt shingle roofs with slopes from 2 in 12 to 4 in 12 shall have two layers of #15 roofing felt applied in accordance with with the International Residential Code.
12. Flashing"
    - A. Through-wall and other concealed flashing shall be a composite of fiberglass fabric, 5 oz. copper and asphalt, equal to York Copper Fabric.
    - B. Exposed flashing shall be 16 oz. copper.
13. Painted aluminum drip strips shall be installed at the eave and rake edges of the roof sheathing for shingle roofs, and above window and door trim where indicated.
14. Exterior Insulation and Finish Systems (EIFS) shall be equal to Dryvit, Residential MD System, with Dryvit drainage mat installed between the secondary weather barrier and the insulation board.
15. Cedar roof shingles shall be No. 1, Blue Label, red cedar. Install over "Cedar Breather" by Benjamin Obdyke Inc. and 30# felts in accordance with manufacturer's instructions.
16. Standing seam roofing shall be 16 ounce copper with water-tight standing seams. For slopes greater than 3 in 12 provide #30 roofing felt underlayment on solid sheathing. For slopes 3 in 12 or less provide self-adhering 40 mil ice and water guard membrane over the entire area to receive standing seam roofing.

FINISHES

Gypsum Wallboard:

1. Gypsum wallboard shall be ASTM C-36 as follows:
   - A. Regular (½"): except where noted.
   - B. Water resistant (½"): at bathroom ceilings and walls that are not tiled.
   - C. Durock interior tile backer board (½"): at all surfaces that have tile.
2. Gypsum boards shall have tapered edges to accommodate joint reinforcement.
3. Provide edge corner beads, trim, taping, and joint compounds as required for the proper completion of the job. Materials shall be by U.S. Gypsum or approved equal.
4. Finishing requirements:
   - A. For typical walls and ceilings provide a Level 4 Finish as defined by the Gypsum Association.
   - B. For surfaces noted to receive semi-gloss or gloss paint provide a Level 5 Finish as defined by the Gypsum Association.

Hardwood Flooring:

1. Unless noted otherwise, provide wood strip flooring where shown on the drawings.
2. Wood strip flooring to be oak. Where abutting existing floor, new floor shall match existing in size and grain. Elsewhere, oak shall be "clear" grade, in accordance with the national Oak Flooring Manufacturer's Association.
3. Install flooring in strict accordance with the recommendation of the National Oak Flooring Manufacturer's Association.
4. After the floors have been sanded, the flooring contractor shall apply a minimum of four stain and urethane samples in two foot by two foot areas on the floor for the owner to review. The owner shall have a minimum of two days to make a selection.

Ceramic Tile:

1. Provide ceramic tile and accessories in accordance with the Tile Council of American Specifications 137.1, in colors and patterns to be specified by the owner.
2. Setting materials: comply with pertinent recommendations contained in the Tile Council of America "Handbook for Ceramic Tile Installation."
3. Installation: comply with ANSI A108.1, ANSI A108.2, and the "Handbook for Ceramic Tile Installation" of the Tile Council of America.
   - A. Extend tile into recesses and under equipment and fixtures to form a complete covering without interruptions.
   - B. Terminate tile neatly at obstruction, edges, and corners, without disruption of pattern or joint alignment.
   - C. Align joints when adjoining tiles on floor, base, trim, and walls are the same size.
   - D. Layout tile work and center the tile fields in both directions in each space or on each wall area.
4. Replacement reserve: Contractor shall furnish to the Owner one unopened box of additional tiles for future repairs and maintenance work.

Carpet:

1. Provide carpeting as indicated on the drawings. Refer to allowances on schedule sheet.

Vinyl Tile:

1. Installation of all vinyl composition tile (VCT) shall be done in a manner which conforms with:
   - ASTM E 648,
   - ASTM E 84, AND
   - ASTM E 662.
2. Replacement reserve: Contractor shall furnish Owner with one unopened box of additional tile for future repairs and maintenance.

Paint:

1. All paint and primers to be Benjamin Moore or approved equal. Refer to schedule for colors and types.
2. All surfaces to be painted shall receive one primer coat and two finish coats.
3. All paint shall be applied according to manufacturer's recommendations.

Architectural Woodwork and Trim:

1. All millwork trim and molding shall be installed accordingly to the quality of standards of the Architectural Woodwork Institute (AWI).
2. All interior trim and millwork shall conform to AWI "custom standards."
3. Flat trim shall be clear pine or approved equal.
4. All corners of trim and siding are to be mitered, except inside corners of interior running trim which shall be coped. Exposed end grains will not be accepted.
5. All millwork and trim shall be installed by craftsmen with experience in work of this type. All work shall be first class in every regard and consistent with the best practices of the trade.

FIRE AND LIFE SAFETY

1. Stairs:
   - A. 7¾" max rise
   - B. 10" min tread
   - C. 6'-8" min head room
   - D. Height of handrails shall be continuous, 34" (min) to 38" (max) above finished stair treads. Handrails required at stairs with 3 or more risers.
   - E. Guardrails shall be 36" (min) to 42" (max) above finished floor.
2. Provide a clear window opening of 5.7 square feet with no less than 20" clear wide and 24" clear high for sleeping area. The sill of this windows shall be no more than 44" above the finished floor.
3. Provide safety glass in all exterior doors, storm doors, sliding glass doors, shower doors, and tub enclosures above and adjacent to spas and tubs and where the glass is closer than 18" to the floor and exceeds 9 square feet in area.
4. Ground metal siding.
5. Smoke detectors shall be provided on every floor, in each bedroom and in each hall outside of bedrooms, and integrated with the electrical system with battery backup.
6. If a fuel-burning appliance, fireplace, or attached garage is present, an interconnected battery back up carbon monoxide alarm or detector must be installed outside all sleeping areas and on all floors. If fuel-buring appliance or fireplace is present in any sleeping area, an interconnected carbon monoxide alarm or detector must also be installed in that room as required per local jurisdiction.
7. Flues shall be class B except solid fuel flues, which shall be class A.
8. Top of flue shall be 2'-0" above any part of structure within 10'-0" of flue.
9. Interior finish of walls and ceiling shall have a flame spread rating not greater than Class III.
10. Carpeting shall meet federal regulation DOC FF-1.
11. Prefab fireplaces shall be (U.L.) rated and installed according to manufacturer's specifications.
12. Provide outside air for combustion in all prefab and masonry fireplaces.

ELECTRICAL AND LIGHTING NOTES

1. Electrical contractor shall size and arrange all circuits in accordance with the National Electric Code as well as all local codes. Service to be upgraded as required.
2. Wall outlets are to be mounted 1'-6" above finished floor unless noted otherwise.
3. Switches are to be mounted 4'-0" above finished floor unless noted otherwise.
4. Mounting heights are to the vertical center of the equipment to the finished elevation of the floor.
5. All new switch and outlet styles are to be approved by Owner prior to installation.
6. Provide hardwired smoke detectors on all floors, located as per Montgomery County Code.
7. Electrician shall locate all fixtures, switches, outlets, etc. prior to running wiring. Owner, Architect, and Electrician to meet at a mutually agreed upon time to review locations. The purpose of which is to allow for possible relocation prior to wiring.
8. Owner is allowed to add an additional ten (10) items (switches, cable, phone, outlet, etc., or any combination) at no additional charge to the owner.
9. Contractor shall determine, based on an on-site review of existing and proposed electrical systems, whether an electrical service heavy-up will be required, and shall include the costs of all required upgrades in their Contract Amount.
10. Provide door bell, transformer, and chime for front door and where indicated. In lieu of Owner's selection otherwise, price shall be based on the following: Illuminated Button - Destination Lighting product number 15921; Transformer - 16V; Chimes - Teiber Model CTSB-or STPW-, in Owner's choice of finish. Verify all selections and mounting locations with Owner prior to purchasing.
11. Per IECC R404.1 90% of installed lighting fixtures must contain high efficacy lamps.

MECHANICAL NOTES

1. All work shall be done in accordance with the International Residential Code (IRC), 2018 Edition, as well as IECC 2018 and other local codes including a compliant Manual J load calculation/ design in accordance with ACCA recommendations.
2. Unless otherwise indicated in Contract Documents, Contractor shall be delegated to design a fully functional and performing mechanical system in accordance with applicable mechanical codes and standards. Contractor shall submit all duct layouts and air handler locations (and thermostat locations) to the Owner and the Architect for approval prior to the commencement of framing. No extras will be given for any modification required to the framing due to ductwork.
3. All exterior unit locations to be coordinated with Owner and Architect.
4. Air conditioners shall be Energy Star rated and shall have a minimum 13 SEER rating with two zones each. Gas furnaces shall have a minimum Annual Fuel Utilization Efficiency rating of 90%.
5. Equipment will be Carrier or approved equal.
6. Ductwork will be galvanized sheet metal and flex.
7. Registers and return grilles are Hart & Cooley or equal.

PLUMBING NOTES

1. All work shall be done in accordance with the International Residential Code (IRC), 2018 Edition, as well as IECC 2018 and other local codes.
2. Contractor shall provide riser diagrams as required for permit, and shall submit to the Architect proposed locations of all waste and supply lines prior to the commencement of framing. No extras will be given for any modification required to the framing due to plumbing lines. Provide cast iron at vertical waste lines.
3. Unless otherwise indicated in Contract Documents. Contractor shall be delegated to design a fully functional and performing water supply and waste system in accordance with applicable plumbing codes and standards. Install water heater and reserve tank per requirements of the house with recirculate system.
4. Provide drain pans under all water heaters and washing machines, and pipe the pan to the sanitary drain upstream of a trap.
5. Contractor shall make a count of existing and proposed fixtures to determine whether a water or sewer upgrade will be required, and shall include the costs of all required upgrades in his Contract Amount. The count of existing fixtures shall be based on an on-site inspection.
6. Provide cast iron at vertical waste lines.
7. Locate plumbing clean out plugs in bottom ⅓" of wall, typical.

STEAM SHOWER

1. Wall construction: Provide ceramic tile over dryset or latex Portland cement mortar bond coat over tile backer board over Dow insulation board over 2x4 studs.
2. Ceiling construction: Same as walls, provide continuous sloped ceiling (½" per foot), and provide rounded inside corner tile at joint between wall and ceiling.
3. Insulate all walls, ceiling, and floor adjacent to steam shower.
4. Steam shower to be watertight, including a watertight shower door.
5. Steam Unit: "Mr. Steam model #MS-150, 6kw or approved equal. Provide the following connections: water inlet ⅜" NPT, steam outlet NPT, drain ⅜" NPT. Follow all manufacturer's specifications.

ROOFTOP-MOUNTED PHOTOVOLTAIC SYSTEMS

1. Structural support for all rooftop-mounted photovoltaic systems and other considerations shall comply with 2018 IRC Section R324.4

STATIONARY STORAGE BATTERY SYSTEMS

1. The installation of battery storage systems shall comply with 2018 IRC Section R327

FILE NAME:

GTM ARCHITECTS

7735 OLD GEORGETOWN ROAD
SUITE 700
BETHESDA, MD 20814
(240)333-2000
(240)333-2001 FAX
WWW.GTMARCHITECTS.COM

GTM

Seal

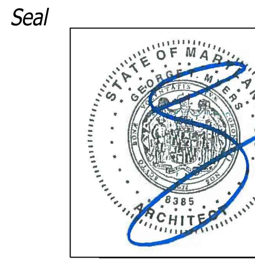

I certify that these documents were prepared or approved by me, and that I am a duly licensed architect under the laws of the State of Maryland, license number 8385, Expiration Date: 12-06-2022.

Consultant

Project

23 HIGH STREET LOT 2

23 HIGH STREET, BROOKEVILLE, MD 20833

Owner

Developer

Issue Description	Date
PERMIT SET	4-11-2022

GTM Project No.	18.0320
Checked By	GTM
Drawn By	LEO/NW
Scale	AS NOTED

Sheet Title

SPECIFICATIONS

Sheet No.

002

COPYRIGHT, 2022 GTM ARCHITECTS, INC.

5 4 3 2 1

DOOR SCHEDULE

DOOR				FRAME					HARDWARE	REMARKS
NO.	SIZE	MATERIAL	MANUF.	MAT:	FIN:	HEAD	JAMB	SILL		
BASEMENT										
1	3^{0} x 6^{8}	SOLID CORE MASONITE	T.B.D						H-4	
1A	1 PAIR 3^{0} x 6^{8}	SOLID CORE MASONITE	T.B.D						H-5	
2	2^{4} x 6^{8}	SOLID CORE MASONITE	T.B.D						H-3	
2A	1 PAIR 1^{6} x 6^{8}	SOLID CORE MASONITE	T.B.D						H-4	
3	2^{4} x 6^{8}	SOLID CORE MASONITE	T.B.D.						H-3	
4	2^{6} x 6^{8}	SOLID CORE MASONITE	T.B.D						H-3	
5	2^{4} x 6^{8}	SOLID CORE MASONITE	T.B.D.						H4	
6	2^{6} x 6^{8}	SOLID CORE MASONITE	T.B.D.						H-4	
7	2^{6} x 6^{8}	SOLID CORE MASONITE	T.B.D.						H-4	
7A	2^{6} x 6^{8}	SOLID CORE MASONITE	T.B.D.						H-4	
FIRST FLOOR										
7B	3^{2} x 8^{0}	WOOD & GLASS	T.B.D						H-2	PAINT GRADE W/ 15" TEMPERED SIDELIGHTS
8	2^{4} x 8^{0}	SOLID CORE MASONITE	T.B.D.						H-3	
9	2^{4} x 8^{0}	SOLID CORE MASONITE	T.B.D.						H-3	
10	1-PAIR 2^{3} x 8^{0}	SOLID CORE MASONITE	T.B.D.						H-4	
11	2^{6} x 8^{0}	SOLID CORE MASONITE	T.B.D						H-4	
12	2^{8} x 8^{0}	WOOD & GLASS	T.B.D						H-2	PAINT GRADE
13	4-PANEL 2^{10} x 8^{0}	SOLID CORE MASONITE	T.B.D.						H-2	2-PANEL SLIDING DOOR W/ MATCHING SIDELITES
SECOND FLOOR										
14	2^{6} x 7^{0}	SOLID CORE MASONITE	T.B.D.						H-3	
15	2^{6} x 7^{0}	SOLID CORE MASONITE	T.B.D.						H-3	
16	1-PAIR 2^{3} x 7^{0}	SOLID CORE MASONITE	T.B.D.						H-5	
17	2^{6} x 7^{0}	SOLID CORE MASONITE	T.B.D.						H-3	
18	2^{8} x 7^{0}	SOLID CORE MASONITE	T.B.D.						H-3	
19	2^{10} x 7^{0}	SOLID CORE MASONITE	T.B.D.						H-4	
20	2^{6} x 7^{0}	SOLID CORE MASONITE	T.B.D.						H-3	
21	2^{6} x 7^{0}	SOLID CORE MASONITE	T.B.D						H-3	
22	1 PAIR 2^{0} x 7^{0}	SOLID CORE MASONITE	T.B.D.						H-5	
23	2^{4} x 7^{0}	SOLID CORE MASONITE	T.B.D						H-3	
24	2^{4} x 7^{0}	SOLID CORE MASONITE	T.B.D.						H-4	
25	2^{4} x 7^{0}	SOLID CORE MASONITE	T.B.D.						H-4	
26	2^{4} x 7^{0}	SOLID CORE MASONITE	T.B.D.						H-4	
27	1 PAIR 1^{3} x 7^{0}	SOLID CORE MASONITE	T.B.D.						H-5	
28	2^{4} x 6^{8}	GLASS	T.B.D.						-	TEMPERED SHOWER DOOR
29	1 PAIR 2^{3} x 7^{0}	SOLID CORE MASONITE	T.B.D.						H-5	
30	2^{6} x 7^{0}	SOLID CORE MASONITE	T.B.D						H-4	
31	2^{6} x 7^{0}	SOLID CORE MASONITE	T.B.D						H-4	
DETACHED GARAGE										
31	8^{0} x 7^{6}	WOOD/GLASS	T.B.D						-	PAINT GRADE
31	8^{0} x 7^{6}	WOOD/GLASS	T.B.D						-	PAINT GRADE
32	3^{0} x 7^{0}	WOOD/GLASS	T.B.D						-	PAINT GRADE

HARDWARE SCHEDULE

NOTE: ALL HARDWARE TO BE BY SCHLAGE OR APPROVED EQUAL. (EXCEPT FRENCH DOORS, WHICH ARE TO HAVE STANDARD HARDWARE BY DOOR MANUF.)

H-1	DOUBLE CYLINDER ENTRANCE LOCK, DEADBOLT
H-2	MULTI-POINT LEVER SET BY WINDOW/DOOR MANUF.
H-3	BATH/BEDROOM PRIVACY LOCK
H-4	PASSAGE SET
H-5	BALL CATCHES $ DUMMY KNOBS
H-6	POCKET DOOR HARDWARE
H-7	FRENCH DOOR PRIVACY LOCK-FLUSH BOLT/DUMMY HANDSET COMBO

GENERAL DOOR NOTES:

1. CONFIRM HARDWARE SELECTION WITH OWNER PRIOR TO ORDERING.
2. INTERIOR DOORS TO BE SOLID CORE.
3. DOORS W/ SIDELITES SHALL HAVE 2-2x6 SPACERS BETWEEN UNLESS SHOWN OTHERWISE
4. PROVIDE SAFETY GLASS AT ALL EXTERIOR FRENCH DOORS, PER CODE
5. PROVIDE CHARCOAL SCREENING @ SCREEN DOORS
6. CONNECT GARAGE DOOR TO ALARM SYSTEM PER OWNER

GENERAL NOTES

1. ALL WINDOWS TO HAVE SCREENS (SCREEN FRAMES COLOR T.B.S.).
2. ALL WINDOWS TO BE ALUMINUM CLAD EXTERIOR, PRE-PRIMED INTERIOR.
3. CONFIRM HARDWARE FINISH W/ ARCHITECT & OWNER PRIOR TO ORDER.
4. ALL GLAZING TO BE DOUBLE PANED, LOW E, CLEAR INSULATED.
5. CONFIRM OVERALL WINDOW SCHEDULE W/ ARCHITECT PRIOR TO ORDER.
6. ALL WINDOWS & GLASS DOORS TO BE SIMULATED DIVIDED LITE, 7/8" MUNTIN.. SEE ELEVATIONS FOR MUNTIN CONFIGURATIONS
7. PROVIDE WHITE JAMB LINERS.
8. ALL EXTERIOR TRIM FOR FRAME WALL UNITS TO BE AZEK PROVIDED & INSTALLED BY G.C.
9. GANGED WINDOWS SHALL 3-2x4 SPACERS BETWEEN UNLESS SHOWN OTHERWISE
10. PROVIDE EGRESS HARDWARE IN EGRESS WINDOWS AS REQUIRED.
11. SEE ELEVATIONS FOR TYPICAL HEAD HEIGHTS ABOVE FINISHED SUBFLOOR
12. PROVIDE SAFETY GLASS AT ENTRIES, STAIRS, OVER BATHTUBS & ELSEWHERE AS REQUIRED BY CODE.

WINDOW SCHEDULE (DETACHED GARAGE)

400	DOUBLE HUNG	JELDWEN SITELINE	SCD3356	34 1/8"x 56 3/4"	INSULATED	SEE ELEVS. FOR GRILLE PATTERN	
401	DOUBLE HUNG	JELDWEN SITELINE	SCD3356	34 1/8"x 56 3/4"	INSULATED	SEE ELEVS. FOR GRILLE PATTERN	
402	DOUBLE HUNG	JELDWEN SITELINE	SCD3356	34 1/8"x 56 3/4"	INSULATED	SEE ELEVS. FOR GRILLE PATTERN	
403	DOUBLE HUNG	JELDWEN SITELINE	SCD3356	34 1/8"x 56 3/4"	INSULATED	SEE ELEVS. FOR GRILLE PATTERN	
404	DOUBLE HUNG	JELDWEN SITELINE	SCD3356	34 1/8"x 56 3/4"	INSULATED	SEE ELEVS. FOR GRILLE PATTERN	
405	FIXED CASEMENT	JELDWEN SITELINE	SCC2424	24 3/4"x 24 3/4"	INSULATED	SEE ELEVS. FOR GRILLE PATTERN	
406	FIXED CASEMENT	JELDWEN SITELINE	SCC2424	24 3/4"x 24 3/4"	INSULATED	SEE ELEVS. FOR GRILLE PATTERN	
407	FIXED CASEMENT	JELDWEN SITELINE	SCC2424	24 3/4"x 24 3/4"	INSULATED	SEE ELEVS. FOR GRILLE PATTERN	

WINDOW SCHEDULE (BASEMENT)

#	TYPE	MANUFACTURER	CAT. NO.	ROUGH OPNG.	GLASS	REMARKS	
001	DOUBLE HUNG	JELDWEN SITELINE	SCD3364	34 1/8" x 64 3/4"	INSULATED	SEE ELEVS. FOR GRILLE PATTERN	TEMPERED UNIT
002	CASEMENT	JELDWEN SITELINE	SCC3230	32 3/4"x 30 3/4"	INSULATED	SEE ELEVS. FOR GRILLE PATTERN	TEMPERED UNIT

WINDOW SCHEDULE (FIRST FLOOR)

100	DOUBLE HUNG	JELDWEN SITELINE	SCD3772	38 1/8" x 72 3/4"	INSULATED	SEE ELEVS. FOR GRILLE PATTERN	
101	DOUBLE HUNG	JELDWEN SITELINE	SCD3772	38 1/8" x 72 3/4"	INSULATED	SEE ELEVS. FOR GRILLE PATTERN	
102	DOUBLE HUNG	JELDWEN SITELINE	SCD3772	38 1/8" x 72 3/4"	INSULATED	SEE ELEVS. FOR GRILLE PATTERN	
103	DOUBLE HUNG	JELDWEN SITELINE	SCD3772	38 1/8" x 72 3/4"	INSULATED	SEE ELEVS. FOR GRILLE PATTERN	
104	DOUBLE HUNG	JELDWEN SITELINE	SCD3772	38 1/8" x 72 3/4"	INSULATED	SEE ELEVS. FOR GRILLE PATTERN	
105	DOUBLE HUNG	JELDWEN SITELINE	SCD3772	38 1/8" x 72 3/4"	INSULATED	SEE ELEVS. FOR GRILLE PATTERN	
106	DOUBLE HUNG	JELDWEN SITELINE	SCD3372	34 1/8" x 72 3/4"	INSULATED	SEE ELEVS. FOR GRILLE PATTERN	
107	DOUBLE HUNG	JELDWEN SITELINE	SCD3372	34 1/8" x 72 3/4"	INSULATED	SEE ELEVS. FOR GRILLE PATTERN	
108	DOUBLE HUNG	JELDWEN SITELINE	SCD3372	34 1/8" x 72 3/4"	INSULATED	SEE ELEVS. FOR GRILLE PATTERN	
109	DOUBLE HUNG	JELDWEN SITELINE	SCD3372	34 1/8" x 72 3/4"	INSULATED	SEE ELEVS. FOR GRILLE PATTERN	
110	DOUBLE HUNG	JELDWEN SITELINE	SCD3372	34 1/8" x 72 3/4"	INSULATED	SEE ELEVS. FOR GRILLE PATTERN	
111	DOUBLE HUNG	JELDWEN SITELINE	SCD3772	38 1/8" x 72 3/4"	INSULATED	SEE ELEVS. FOR GRILLE PATTERN	
112	DOUBLE HUNG	JELDWEN SITELINE	SCD3772	38 1/8" x 72 3/4"	INSULATED	SEE ELEVS. FOR GRILLE PATTERN	
113	DOUBLE HUNG	JELDWEN SITELINE	SCD3772	38 1/8" x 72 3/4"	INSULATED	SEE ELEVS. FOR GRILLE PATTERN	
114	DOUBLE HUNG	JELDWEN SITELINE	SCD3364	34 1/8" x 64 3/4"	INSULATED	SEE ELEVS. FOR GRILLE PATTERN	
115	DOUBLE HUNG	JELDWEN SITELINE	SCD3364	34 1/8" x 64 3/4"	INSULATED	SEE ELEVS. FOR GRILLE PATTERN	
116	CASEMENT	JELDWEN SITELINE	SCC2854-2	56 3/4"x 54 3/4"	INSULATED	SEE ELEVS. FOR GRILLE PATTERN	FRENCH CASEMENT
117	NOT USED	-	-	-	-	-	
118	DOUBLE HUNG	JELDWEN SITELINE	SCD3756	38 1/8" x 56 3/4"	INSULATED	SEE ELEVS. FOR GRILLE PATTERN	
119	DOUBLE HUNG	JELDWEN SITELINE	SCD2572	26 1/8" x 72 3/4"	INSULATED	SEE ELEVS. FOR GRILLE PATTERN	
120	DOUBLE HUNG	JELDWEN SITELINE	SCD3772	38 1/8" x 72 3/4"	INSULATED	SEE ELEVS. FOR GRILLE PATTERN	
121	DOUBLE HUNG	JELDWEN SITELINE	SCD2572	26 1/8" x 72 3/4"	INSULATED	SEE ELEVS. FOR GRILLE PATTERN	

WINDOW SCHEDULE (SECOND FLOOR)

200	DOUBLE HUNG	JELDWEN SITELINE	SCD3760	38 1/8" x 60 3/4"	INSULATED	SEE ELEVS. FOR GRILLE PATTERN	EGRESS UNIT
201	DOUBLE HUNG	JELDWEN SITELINE	SCD3760	38 1/8" x 60 3/4"	INSULATED	SEE ELEVS. FOR GRILLE PATTERN	EGRESS UNIT
202	DOUBLE HUNG	JELDWEN SITELINE	SCD3760	38 1/8" x 60 3/4"	INSULATED	SEE ELEVS. FOR GRILLE PATTERN	TEMPERED UNIT
203	DOUBLE HUNG	JELDWEN SITELINE	SCD3764	38 1/8" x 64 3/4"	INSULATED	SEE ELEVS. FOR GRILLE PATTERN	
204	CASEMENT	JELDWEN SITELINE	SCC3230	32 3/4"x 30 3/4"	INSULATED	SEE ELEVS. FOR GRILLE PATTERN	TEMPERED UNIT
205	DOUBLE HUNG	JELDWEN SITELINE	SCD3764	38 1/8" x 64 3/4"	INSULATED	SEE ELEVS. FOR GRILLE PATTERN	EGRESS UNIT
206	DOUBLE HUNG	JELDWEN SITELINE	SCD3760	38 1/8" x 60 3/4"	INSULATED	SEE ELEVS. FOR GRILLE PATTERN	
207	DOUBLE HUNG	JELDWEN SITELINE	SCD3760	38 1/8" x 60 3/4"	INSULATED	SEE ELEVS. FOR GRILLE PATTERN	
208	DOUBLE HUNG	JELDWEN SITELINE	SCD3760	38 1/8" x 60 3/4"	INSULATED	SEE ELEVS. FOR GRILLE PATTERN	EGRESS UNIT
209	DOUBLE HUNG	JELDWEN SITELINE	SCD3760	38 1/8" x 60 3/4"	INSULATED	SEE ELEVS. FOR GRILLE PATTERN	EGRESS UNIT
210	DOUBLE HUNG	JELDWEN SITELINE	SCD3160	32 1/8" x 60 3/4"	INSULATED	SEE ELEVS. FOR GRILLE PATTERN	EGRESS UNIT
211	DOUBLE HUNG	JELDWEN SITELINE	SCD3160	32 1/8" x 60 3/4"	INSULATED	SEE ELEVS. FOR GRILLE PATTERN	EGRESS UNIT
212	DOUBLE HUNG	JELDWEN SITELINE	SCD3760	38 1/8" x 60 3/4"	INSULATED	SEE ELEVS. FOR GRILLE PATTERN	EGRESS UNIT
213	DOUBLE HUNG	JELDWEN SITELINE	SCD3760	38 1/8" x 60 3/4"	INSULATED	SEE ELEVS. FOR GRILLE PATTERN	EGRESS UNIT
214	DOUBLE HUNG	JELDWEN SITELINE	SCD3760	38 1/8" x 60 3/4"	INSULATED	SEE ELEVS. FOR GRILLE PATTERN	EGRESS UNIT
215	DOUBLE HUNG	JELDWEN SITELINE	SCD3060	30 1/8" x 60 3/4"	INSULATED	SEE ELEVS. FOR GRILLE PATTERN	
216	DOUBLE HUNG	JELDWEN SITELINE	SCD3060	30 1/8" x 60 3/4"	INSULATED	SEE ELEVS. FOR GRILLE PATTERN	
217	CASEMENT	JELDWEN SITELINE	SCC2854-2	56 3/4"x 54 3/4"	INSULATED	SEE ELEVS. FOR GRILLE PATTERN	FRENCH CASEMENT
218	NOT USED	-	-	-	-	-	
219	DOUBLE HUNG	JELDWEN SITELINE	SCD3760	38 1/8" x 60 3/4"	INSULATED	SEE ELEVS. FOR GRILLE PATTERN	EGRESS UNIT
220	DOUBLE HUNG	JELDWEN SITELINE	SCD3760	38 1/8" x 60 3/4"	INSULATED	SEE ELEVS. FOR GRILLE PATTERN	EGRESS UNIT

GTM ARCHITECTS

7735 OLD GEORGETOWN ROAD
SUITE 700
BETHESDA, MD 20814
(240)333-2000
(240)333-2001 FAX
WWW.GTMARCHITECTS.COM

GTM

Seal

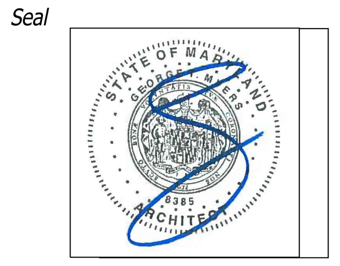

I certify that these documents were prepared or approved by me, and that I am a duly licensed architect under the laws of the State of Maryland, license number 8385, Expiration Date: 12-06-2022.

Consultant

Project

23 HIGH STREET LOT 2

23 HIGH STREET, BROOKEVILLE, MD 20833

Owner

Developer

Issue Description	*Date*
PERMIT SET	4-11-2022

GTM Project No.	18.0320
Checked By	GTM
Drawn By	LEO/NW
Scale	AS NOTED

Sheet Title

DOOR & WINDOW SCHEDULES

Sheet No. 003

COPYRIGHT, 2022 GTM ARCHITECTS, INC.

FILE NAME:

GENERAL NOTES

1. Boundary information and two-foot contour data within noted "Limits of Topographic Survey" are based upon surveys performed by CAS Engineering, dated July, 2018.
2. The location of offsite trees, improvements and other structures beyond noted "Limits of Topographic Survey" are approximate. Offsite features are shown per available MNCPPC topographic records and are provided for illustrative purposes only.
3. Total lot area: Lot 2 =15,000 sq. ft. (0.344 ac.)
4. Property is located on Tax Map HU562 and WSSC 200' Sheet 227NW03.
5. Property is located on Montgomery County soils survey map number 14. Soil type(s): 1B, 1C, 6A & 16D. [Gaila silt loam, Baile silt loam & Brinklow-Blocktown channery silt loams] Hydrologic Soil Group "B" "C" & "D".
6. Flood zone "X" per F.E.M.A. Firm Maps, Community Panel Number 24031C0216D.
7. Property is located in the Hawlings River - Reddy Branch Watershed.
8. Water Category - 3, Sewer Category - 3
9. Local utilities include:
   Water / Sewer - Washington Suburban Sanitary Commission
   Electric - PEPCO
   Telephone - Verizon
   Gas - Washington Gas
10. Parcel 770 is located in the Town of Brookeville and the Brookeville Historic District.
11. This plan was created without the benefit of a title report.

TOWN OF BROOKEVILLE ZONING DATA

1. Zoning: Historic Village Residential (HVR)

Minimum Lot Area = 10,000 sq. ft.	Front B.R.L. = 15 ft.
Minimum Lot Width at R/W = 25 ft.	Rear B.R.L. = 40 ft. / 2 ft. (Accessory Structures)
Minimum Lot Width at B.R.L. = N/A	Side B.R.L. = 8 ft. / 2 ft. (Accessory Structures)

2. Verify main building height in accordance with the Town of Brookeville Zoning Ordinance.

Height of building from FF to highest point:	28.75 ft (28'-9" Per Arch.)
First floor elevation	446.50 ft
Height of building to highest point	28.75 ft
Elevation @ highest point	475.25 ft
Average elevation along front of building	443.64 ft

Height of building at highest point = 475.25 - 443.64 = 31.61 feet
Allowable height of building = 35 feet

Proposed height of building to highest point = 31.61 feet

3. Verify accessory building height in accordance with the Town of Brookeville Zoning Ordinance.

Height of building from FF to highest point:	18.77 ft (18'-9 1/4" Per Arch.)
First floor elevation	444.00 ft
Height of accessory building to highest point	18.77 ft
Elevation @ highest point	462.77 ft
Average elevation along front of building	443.25 ft

Height of accessory building at highest point = 462.77 - 443.25 = 19.52 feet
Allowable height of accessory building = 35 feet

Proposed height of accessory building to highest point = 19.52 feet

LEGEND

EXISTING FEATURES

- Ex. Sewer Manhole and Invert
- Ex. Water Line with Valve
- Ex. Gas Line with Valve
- Ex. Overhead Utility with Pole
- Ex. Two- And Ten-foot Contours
- Ex. Spot Elevation
- Ex. Canopy Line
- Ex. Tree
- Ex. Specimen Tree (DBH ≥ 30")
- Ex. Significant Tree (DBH ≥ 24")
- Ex. Tree (To Be Removed)

PROPOSED FEATURES

- Prop. Water-House Connection
- Prop. Sewer-House Connection
- Prop. Gas-House Connection
- Prop. Electric-House Connection
- Prop. Contour with Elevation
- Prop. Spot Elevation
- Prop. Surface Flow Direction
- Prop. Tree
- Prop. Streetlight

AVERAGE GRADE (ACCESSORY BUILDING)

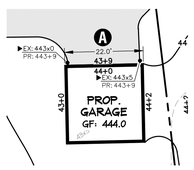

	ELEV @ POINT 1	ELEV @ POINT 2	AVERAGE GRADE	SECTION LENGTH	% LENGTH	AVERAGE GRADE x % LENGTH
Section A	443.00	443.50	443.25	22.0	100.00%	443.25

AVERAGE GRADE = 443.25

AVERAGE GRADE DETERMINATION

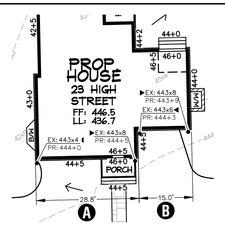

	ELEV @ POINT 1	ELEV @ POINT 2	AVERAGE GRADE	SECTION LENGTH	% LENGTH	AVERAGE GRADE x % LENGTH
Section A	443.40	443.80	443.60	28.8	65.75%	291.67
Section B	443.60	443.80	443.70	15.0	34.25%	151.97

AVERAGE GRADE = 443.64

UTILITY INFORMATION

EXISTING UNDERGROUND UTILITY LOCATIONS ARE APPROXIMATE AND MUST BE FIELD VERIFIED. UTILITY LOCATIONS ARE BASED UPON AVAILABLE RECORDS AND ARE SHOWN TO THE BEST OF OUR ABILITY.

FOR LOCATION OF UTILITIES, CALL "MISS UTILITY" AT 1-800-257-7777, OR LOG ON TO WWW.MISSUTILITY.NET/ITIC 48 HOURS IN ADVANCE OF ANY WORK IN THIS VICINITY. THE EXCAVATOR MUST NOTIFY ALL PUBLIC UTILITY COMPANIES WITH UNDER GROUND FACILITIES IN THE AREA OF PROPOSED EXCAVATION AND HAVE THOSE FACILITIES LOCATED BY THE UTILITY COMPANIES PRIOR TO COMMENCING EXCAVATION. THE EXCAVATOR IS RESPONSIBLE FOR COMPLIANCE WITH REQUIREMENTS OF CHAPTER 36A OF THE MONTGOMERY COUNTY CODE.

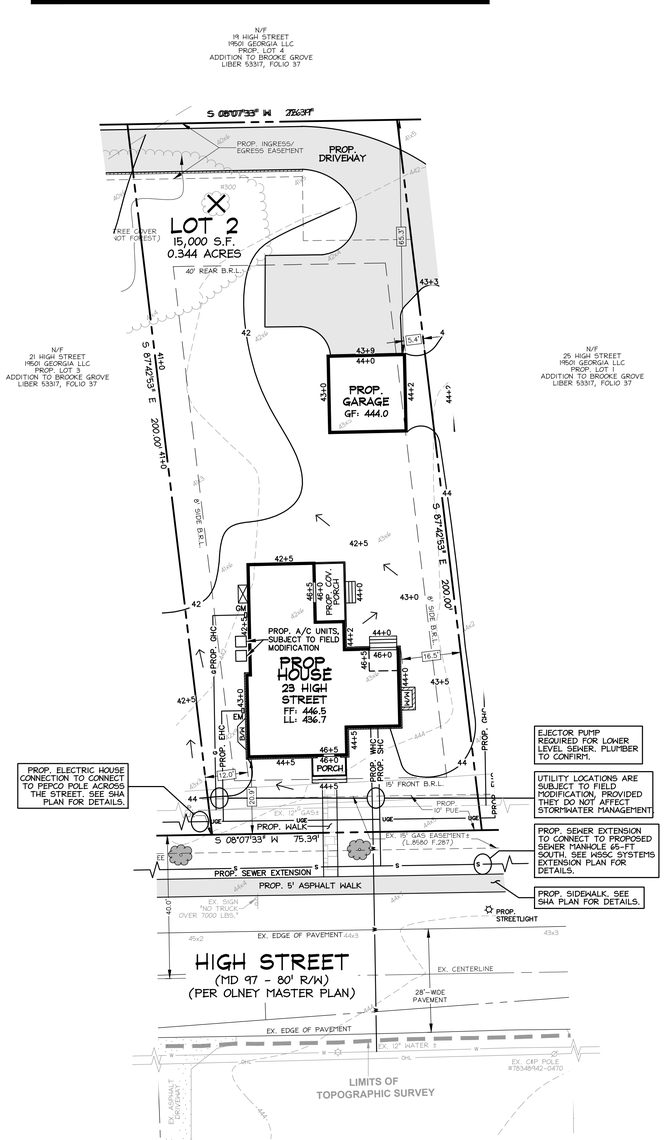

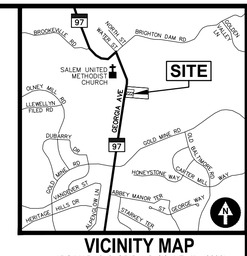

VICINITY MAP

ADC MAP 5050, GRID A-3, SCALE: 1" = 2000'

CAS JOB NO.: 16-579B
DATE: 04/2022

DATE	REVISION
04/01/22	SMF: Building Permit Site Plan to Arch for coordination.

Lot 2, Addition to Brooke Grove
Plat Pending
Olney (8th) Election District, Montgomery County, MD

23 High Street
Brookeville, Maryland 20833

CAS ENGINEERING-MD
10 South Bentz Street
Frederick, Maryland 21701
301-607-8031 Phone
info@casengineering.com
www.casengineering.com

CAS ENGINEERING-DC, LLC
4836 MacArthur Boulevard, NW, 2nd Floor
Washington, DC 20007
202-393-7200 Phone
info@cas-dc.com
www.cas-dc.com

0 10 20 30 40
SCALE: 1 INCH = 20 FEET

SHEET TITLE:

Building Permit Site Plan

THIS PLAN IS FOR BUILDING PERMIT APPROVAL ONLY.
SEE THE SHA DISTRICT OFFICE PERMIT PLAN FOR ADDITIONAL DETAILS.
SEE THE APPROVED SEDIMENT CONTROL PLAN FOR REQUIRED SEDIMENT CONTROL AND STORMWATER MANAGEMENT MEASURES.

CLIENT
Phillip E. Sardelis
10776 Ticker Street
Beltsville, MD 20705
philsardelis@gmail.com

ARCHITECT
GTM Architects
Attn: Luke Olson
7735 Old Georgetown Road, Suite 700
Bethesda, MD 20814
(240) 333-2021 Phone
lolson@gtmarchitects.com

23 High Street
Lot 2
Addition to Brooke Grove
Building Permit Site Plan

P:\2016\165798__23 High Street, Parcel 770\6 drawings\165579_BPSP_SCP_SWM.dwg, 4/1/2022 11:05:18 AM, smf, © 2022 CAS Engineering and CAS Engineering-DC, LLC

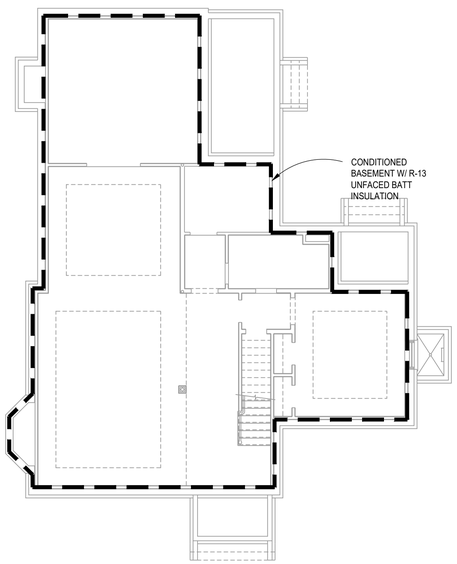

1 BASEMENT THERMAL ENVELOPE PLAN
SCALE: 1/8"=1'=0

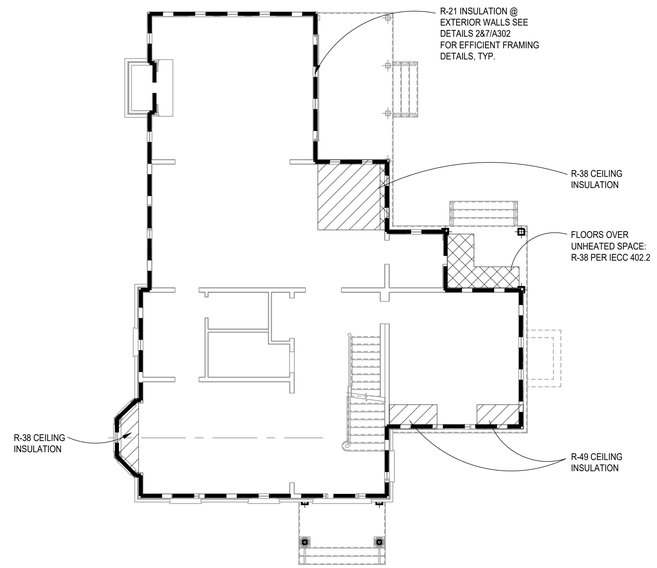

2 FIRST FLOOR THERMAL ENVELOPE PLAN
SCALE: 1/8"=1'=0

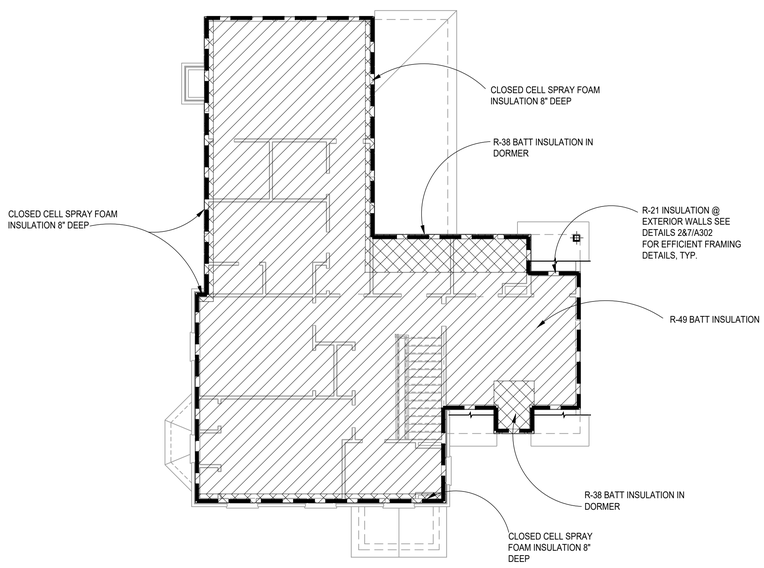

3 SECOND FLOOR THERMAL ENVELOPE PLAN
SCALE: 1/8"=1'=0

*137.9 TOTAL SQ. FT. OF PROPOSED
R-38 CEILING/ATTIC INSULATION

500 SQ. FT ALLOWED PER IECC 402.2

WINDOW/DOORS THERMAL DATA

THERMAL PERFORMACE DATA FOR DOORS & WINDOWS		
OPENING TYPE	U-VALUE	SHGC
CASEMENT WINDOWS	0.28	0.23
DOUBLE HUNG WINDOWS	0.30	0.24
FRENCH IN-SWING DOORS	0.29	0.19
CLAD SLIDING PATIO DOORS	0.30	0.25
EXTERIOR SWINGING DOORS	0.27	----

THE AREA-WEIGHTED AVERAGE MAXIMUM FENESTRATION U-FACTOR PERMITTED USING TRADE-OFFS FROM SECTION 402.1 IN ZONE 4 SHALL BE .35 FOR VERTICAL FENESTRATION AND .55 FOR SKYLITES

ENERGY CONSERVATION NOTES

1. The following provisions for thermal resistance meet or exceed the requirements stipulated by the International Energy Conservation Code.
2. INSULATION: IRC 2018

CEILING (OF UPPERMOST STORY)	R-49 W/ 500SF R-30 ALLOWANCE, OR R-38 CONTINUOUS
VAULTED CEILING	R-38
EXTERIOR FRAME WALLS	R-20 OR 13+5 (EXTERIOR)
RIM JOISTS	EQUAL TO WALL BELOW
FLOORS OVER UNHEATED SPACES (INCLUDING FLOOR OVERHANGS)	R-38
MASONRY WALLS (ENCLOSED HEATED LIVING AREAS)	R-13 OR R-10 CONTINUOUS
SLAB ON GRADE (HEATED SPACE)	
24" PERIMETER INSULATION	R-10
WINDOWS	0.32 U FACTOR, 0.40 SHGC
DOORS	SEE SECTION R402.3.4

*ALL VALUES ARE TYPICAL UNLESS NOTED OTHERWISE IN ARCHITECTURAL DRAWINGS

3. Air Infiltration:
A. Windows: not exceeding five tenths (0.5) CFM of sash crack.
B. Sliding Glass Doors: not exceeding five tenths (0.5) CFM per foot of door area.
C. Swinging Doors: not exceeding one and twenty-five hundredths (1.25) CFM per square foot of door area.
Provide 1" fiberglass sill sealer between foundation wall and all sill plates.
D. In order to seal between dissimilar materials to allow for differential expansion and contraction, the following shall be caulked, gasketed, weatherstripped or otherwise sealed with an air barrier material, suitable film or solid material:

1. All joints, seams, and penetrations
2. Site-built windows, doors, and skylites
3. Openings between window and door assemblies and their respective jambs & framing
4. Utility penetrations
5. Dropped ceilings or chases adjacent to the thermal envelope
6. Knee walls
7. Walls and ceilings separating a garage from conditioned spaces
8. Behind tubs and showers on exterior walls
9. Common walls between dwelling units
10. Attic access openings
11. Rim joist junction
12. Other sources of infiltration

HVAC SYSTEMS & WATER HEATING

1. HEATING & COOLING EQUIP. CONTROLS AT LEAST ONE PRE-PROGRAMMED THERMOSTAT IS REQUIRED WHEN USING A FORCED AIR SYSTEM. SEPARATE THERMOSTATS ARE REQUIRED FOR EACH HEATING/COOLING ZONE IN THE DWELLING.

2. DUCT INSULATION. SUPPLY DUCTS LOCATED OUTSIDE THE BUILDING THERMAL ENVELOPE SHALL BE INSULATED TO MINIMUM R-8, ALL OTHER DUCTS INSULATED TO A MINIMUM OF R-6

3. DUCT SEALING. ALL DUCTS, AIR HANDLERS, FILTER BOXES, & BUILDING CAVITIES MUST BE SEALED. JOINTS & SEAMS SHALL COMPLY W/ M1606.4.1 IRC

4. MECHANICAL SYSTEM PIPING INSULATION. R-3 FOR PIPING CARRYING FLUIDS AT >105°F OR <55°F IS REQUIRED

5. MECHANICAL VENTILATION. OUTDOOR AIR INTAKES OR EXHAUSTS SHALL HAVE DAMPERS

6. SERVICE WATER HEATING. PIPING IN THE CIRCULATING HOT WATER SYSTEM SHALL BE INSULATED TO AN R-3 AND SYSTEM TO INCLUDE MANUAL OR AUTOMATIC SWITCH THAT CAN TURN OFF THE SYSTEM WHEN IT IS NOT USED, WATER HEATERS WITH PIPE RISERS SHALL HAVE HEAT TRAPS ON BOTH INLET AND OUTLET OF WATER HEATER UNLESS THE WATER HEATER HAS INTEGRAL HEAT TRAPS OR IS PART OF A CIRCULATION SYSTEM. TYPICAL METHODS USED FOR CREATING HEAT TRAPS ARE "U" OR "RAMS HORN" BENDS IN THE FLEXIBLE PIPE CONNECTORS OR INSTALLING AFTERMARKET PIPE NIPPLES WITH INTEGRAL TRAPS.

7. EQUIPMENT SIZING. HEATING AND COOLING EQUIPMENT SHALL BE SIZED BASED ON BUILDING LOADS CALCULATED IN ACCORDANCE WITH ACCA (AIR CONDITIONING CONTRACTORS OF AMERICA) MANUAL-J, A SIMPLIFIED METHOD OF CALCULATING HEATING AND COOLING LOADS. THE MANUAL-J CALCULATIONS SHALL BE SUBMITTED UPON APPLICATION FOR THE MECHANICAL PERMIT.

SECTION 302.1 OF IECC SPECIFIES THE INTERIOR DESIGN TEMPERATURES USED FOR HEATING AND COOLING LOAD CALCULATIONS AS MAXIMUM OF 72°F FOR HEATINGAND MINIMUM 75°F FOR COOLING.

LEGEND

INSULATION PERIMETER

AREA OF INSULATION ABOVE OR BELOW AS INDICATED

GTM ARCHITECTS

7735 OLD GEORGETOWN ROAD
SUITE 700
BETHESDA, MD 20814
(240)333-2000
(240)333-2001 FAX
WWW.GTMARCHITECTS.COM

Seal

I certify that these documents were prepared or approved by me, and that I am a duly licensed architect under the laws of the State of Maryland License number 8,885, Expiration Date 12-31-2022.

Consultant

Project

23 HIGH STREET
LOT 2

23 HIGH STREET, BROOKEVILLE, MD 20833

Owner

Developer

PERMIT SET	4-11-2022
Issue Description	*Date*

GTM Project No.	18.0320
Checked By	GTM
Drawn By	LEO/NW
Scale	AS NOTED

Sheet Title

THERMAL ENVELOPE DIAGRAMS

Sheet No.

EC001

COPYRIGHT, 2022 GTM ARCHITECTS, INC.

FILE NAME:

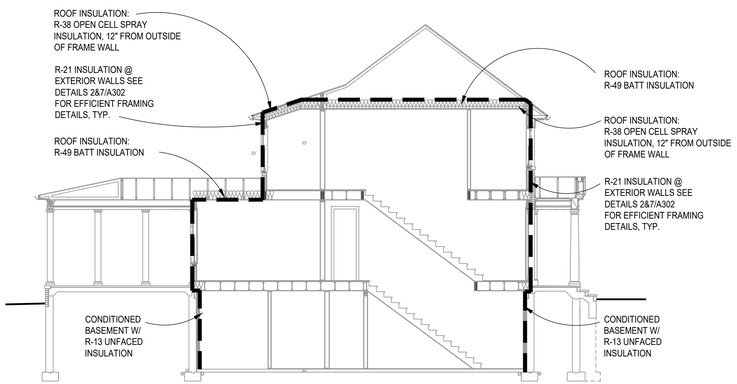

1 TYPICAL THERMAL ENVELOPE BUILDING SECTION

SCALE: 1/8"=1'=0

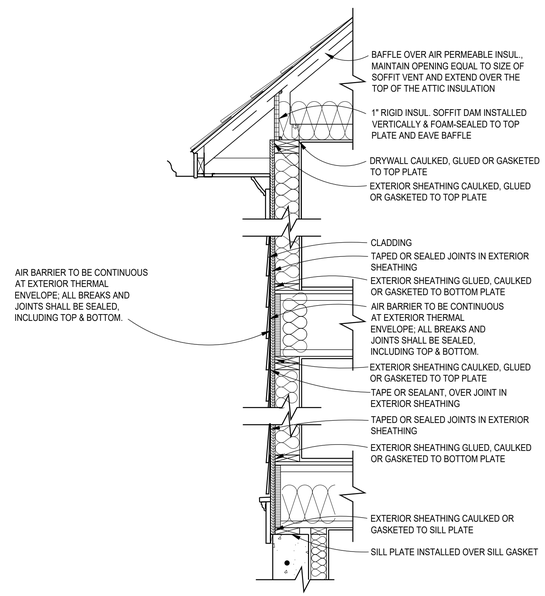

2 ENVELOPE AIR SEALING DETAIL

SCALE: 3/4"=1'-0"

WINDOW/DOORS THERMAL DATA

THERMAL PERFORMACE DATA FOR DOORS & WINDOWS		
OPENING TYPE	U-VALUE	SHGC
CASEMENT WINDOWS	0.28	0.23
DOUBLE HUNG WINDOWS	0.30	0.24
FRENCH IN-SWING DOORS	0.29	0.19
CLAD SLIDING PATIO DOORS	0.30	0.25
EXTERIOR SWINGING DOORS	0.27	----

THE AREA-WEIGHTED AVERAGE MAXIMUM FENESTRATION U-FACTOR PERMITTED USING TRADE-OFFS FROM SECTION 402.1 IN ZONE 4 SHALL BE .35 FOR VERTICAL FENESTRATION AND .55 FOR SKYLITES

ENERGY CONSERVATION NOTES

1. The following provisions for thermal resistance meet or exceed the requirements stipulated by the International Energy Conservation Code.
2. INSULATION: IRC 2018

CEILING (OF UPPERMOST STORY)	R-49 W/ 500SF R-30 ALLOWANCE, OR R-38 CONTINUOUS
VAULTED CEILING	R-38
EXTERIOR FRAME WALLS	R-20 OR 13+5 (EXTERIOR)
RIM JOISTS	EQUAL TO WALL BELOW
FLOORS OVER UNHEATED SPACES (INCLUDING FLOOR OVERHANGS)	R-38
MASONRY WALLS (ENCLOSED HEATED LIVING AREAS)	R-13 OR R-10 CONTINUOUS
SLAB ON GRADE (HEATED SPACE)	
24" PERIMETER INSULATION	R-10
WINDOWS	0.32 U FACTOR, 0.40 SHGC
DOORS	SEE SECTION R402.3.4

*ALL VALUES ARE TYPICAL UNLESS NOTED OTHERWISE IN ARCHITECTURAL DRAWINGS

3. Air Infiltration:
A. Windows: not exceeding five tenths (0.5) CFM of sash crack.
B. Sliding Glass Doors: not exceeding five tenths (0.5) CFM per foot of door area.
C. Swinging Doors: not exceeding one and twenty-five hundredths (1.25) CFM per square foot of door area.
Provide 1" fiberglass sill sealer between foundation wall and all sill plates.
D. In order to seal between dissimilar materials to allow for differential expansion and contraction, the following shall be caulked, gasketed, weatherstripped or otherwise sealed with an air barrier material, suitable film or solid material:

1. All joints, seams, and penetrations
2. Site-built windows, doors, and skylites
3. Openings between window and door assemblies and their respective jambs & framing
4. Utility penetrations
5. Dropped ceilings or chases adjacent to the thermal envelope
6. Knee walls
7. Walls and ceilings separating a garage from conditioned spaces
8. Behind tubs and showers on exterior walls
9. Common walls between dwelling units
10. Attic access openings
11. Rim joist junction
12. Other sources of infiltration

HVAC SYSTEMS & WATER HEATING

1. HEATING & COOLING EQUIP. CONTROLS AT LEAST ONE PRE-PROGRAMMED THERMOSTAT IS REQUIRED WHEN USING A FORCED AIR SYSTEM. SEPARATE THERMOSTATS ARE REQUIRED FOR EACH HEATING/COOLING ZONE IN THE DWELLING.

2. DUCT INSULATION. SUPPLY DUCTS LOCATED OUTSIDE THE BUILDING THERMAL ENVELOPE SHALL BE INSULATED TO MINIMUM R-8, ALL OTHER DUCTS INSULATED TO A MINIMUM OF R-6

3. DUCT SEALING. ALL DUCTS, AIR HANDLERS, FILTER BOXES, & BUILDING CAVITIES MUST BE SEALED. JOINTS & SEAMS SHALL COMPLY W/ M1606.4.1 IRC

4. MECHANICAL SYSTEM PIPING INSULATION. R-3 FOR PIPING CARRYING FLUIDS AT >105°F OR <55°F IS REQUIRED

5. MECHANICAL VENTILATION. OUTDOOR AIR INTAKES OR EXHAUSTS SHALL HAVE DAMPERS

6. SERVICE WATER HEATING. PIPING IN THE CIRCULATING HOT WATER SYSTEM SHALL BE INSULATED TO AN R-3 AND SYSTEM TO INCLUDE MANUAL OR AUTOMATIC SWITCH THAT CAN TURN OFF THE SYSTEM WHEN IT IS NOT USED, WATER HEATERS WITH PIPE RISERS SHALL HAVE HEAT TRAPS ON BOTH INLET AND OUTLET OF WATER HEATER UNLESS THE WATER HEATER HAS INTEGRAL HEAT TRAPS OR IS PART OF A CIRCULATION SYSTEM. TYPICAL METHODS USED FOR CREATING HEAT TRAPS ARE "U" OR "RAMS HORN" BENDS IN THE FLEXIBLE PIPE CONNECTORS OR INSTALLING AFTERMARKET PIPE NIPPLES WITH INTEGRAL TRAPS.

7. EQUIPMENT SIZING. HEATING AND COOLING EQUIPMENT SHALL BE SIZED BASED ON BUILDING LOADS CALCULATED IN ACCORDANCE WITH ACCA (AIR CONDITIONING CONTRACTORS OF AMERICA) MANUAL-J, A SIMPLIFIED METHOD OF CALCULATING HEATING AND COOLING LOADS. THE MANUAL-J CALCULATIONS SHALL BE SUBMITTED UPON APPLICATION FOR THE MECHANICAL PERMIT.

SECTION 302.1 OF IECC SPECIFIES THE INTERIOR DESIGN TEMPERATURES USED FOR HEATING AND COOLING LOAD CALCULATIONS AS MAXIMUM OF 72°F FOR HEATINGAND MINIMUM 75°F FOR COOLING.

LEGEND

INSULATION PERIMETER

AREA OF INSULATION ABOVE OR BELOW AS INDICATED

GTM ARCHITECTS

7735 OLD GEORGETOWN ROAD
SUITE 700
BETHESDA, MD 20814
(240)333-2000
(240)333-2001 FAX
WWW.GTMARCHITECTS.COM

Seal

I certify that these documents were prepared or approved by me, and that I am a duly licensed architect under the laws of the State of Maryland License Number 8085. Expiration Date: 06-06-2022

Consultant

Project

23 HIGH STREET
LOT 2

23 HIGH STREET, BROOKEVILLE, MD 20833

Owner

Developer

PERMIT SET	4-11-2022
Issue Description	*Date*

GTM Project No.	18.0320
Checked By	GTM
Drawn By	LEO/NW
Scale	AS NOTED

Sheet Title

THERMAL ENVELOPE DIAGRAMS

Sheet No.

EC002

COPYRIGHT, 2022 GTM ARCHITECTS, INC.

5 | 4 | 3 | 2 | 1

D

Generated by RES*check-Web* Software
Compliance Certificate

Project PARCEL 770 - LOT B

Energy Code:	**2018 IECC**
Location:	**Prince George's County, Maryland**
Construction Type:	**Single-family**
Project Type:	**New Construction**
Conditioned Floor Area:	**5,248 ft2**
Glazing Area	**27%**
Climate Zone:	**4 (4999 HDD)**
Permit Date:	
Permit Number:	

Construction Site:

Owner/Agent:
Maryland

Designer/Contractor:
Maryland

Compliance: Passes using UA trade-off

Compliance: **5.6% Better Than Code** Maximum UA: **552** Your UA: **521** Maximum SHGC: **0.40** Your SHGC: **0.24**

The % Better or Worse Than Code Index reflects how close to compliance the house is based on code trade-off rules.
It DOES NOT provide an estimate of energy use or cost relative to a minimum-code home.

Slab-on-grade tradeoffs are no longer considered in the UA or performance compliance path in REScheck. Each slab-on-grade assembly in the specified climate zone must meet the minimum energy code insulation R-value and depth requirements.

Envelope Assemblies

Assembly	Gross Area or Perimeter	Cavity R-Value	Cont. R-Value	Prop. U-Factor	Req. U-Factor	Prop. UA	Req. UA
Floor over unheated space: Flat Ceiling or Scissor Truss	30	38.0	0.0	0.030	0.026	1	1
Eaves: Flat Ceiling or Scissor Truss	138	38.0	0.0	0.030	0.026	4	4
Ceiling: Raised or Energy Truss	1,549	49.0	0.0	0.020	0.026	31	40
Wall: Wood Frame, 16" o.c.	2,936	21.0	0.0	0.057	0.060	120	126
Door Copy: Solid Door (under 50% glazing)	49			0.270	0.320	13	16
Door: Glass Door (over 50% glazing) SHGC: 0.25	96			0.300	0.320	29	31
Windows Dbl Hung: Wood Frame SHGC: 0.24	644			0.300	0.320	193	206
Windows Casement: Wood Frame SHGC: 0.23	48			0.280	0.320	13	15
Basement Wall: Solid Concrete or Masonry Wall height: 8.8' Depth below grade: 7.0' Insulation depth: 8.8'	1,860	13.0	0.0	0.061	0.059	113	109
Window: Wood Frame SHGC: 0.24	14			0.300	0.320	4	4

Compliance Statement: The proposed building design described here is consistent with the building plans, specifications, and other calculations submitted with the permit application. The proposed building has been designed to meet the 2018 IECC requirements in RES*check* Version : REScheck-Web and to comply with the mandatory requirements listed in the RES*check* Inspection Checklist.

Name - Title ____ Signature ____ Date ____

RES*check* Software Version : REScheck-Web
Inspection Checklist

Energy Code: 2018 IECC

Requirements: 0.0% were addressed directly in the RES*check* software

Text in the "Comments/Assumptions" column is provided by the user in the REScheck Requirements screen. For each requirement, the user certifies that a code requirement will be met and how that is documented, or that an exception is being claimed. Where compliance is itemized in a separate table, a reference to that table is provided.

Section # & Req.ID	Pre-Inspection/Plan Review	Plans Verified Value	Field Verified Value	Complies?	Comments/Assumptions
103.1, 103.2 [PR1][1]	Construction drawings and documentation demonstrate energy code compliance for the building envelope. Thermal envelope represented on construction documents.			☐Complies ☐Does Not ☐Not Observable ☐Not Applicable	
103.1, 103.2, 403.7 [PR3][1]	Construction drawings and documentation demonstrate energy code compliance for lighting and mechanical systems. Systems serving multiple dwelling units must demonstrate compliance with the IECC Commercial Provisions.			☐Complies ☐Does Not ☐Not Observable ☐Not Applicable	
302.1, 403.7 [PR2][2]	Heating and cooling equipment is sized per ACCA Manual S based on loads calculated per ACCA Manual J or other methods approved by the code official.	Heating: Btu/hr____ Cooling: Btu/hr____	Heating: Btu/hr____ Cooling: Btu/hr____	☐Complies ☐Does Not ☐Not Observable ☐Not Applicable	

Additional Comments/Assumptions:

1 High Impact (Tier 1) 2 Medium Impact (Tier 2) 3 Low Impact (Tier 3)

Section # & Req.ID	Foundation Inspection	Plans Verified Value	Field Verified Value	Complies?	Comments/Assumptions
402.1.1 [FO4][1]	Conditioned basement wall insulation R-value. Where interior insulation is used, verification may need to occur during Insulation Inspection. Not required in warm-humid locations in Climate Zone 3.	R-____ R-____	R-____ R-____	☐Complies ☐Does Not ☐Not Observable ☐Not Applicable	*See the Envelope Assemblies table for values.*
303.2 [FO5][1]	Conditioned basement wall insulation installed per manufacturer's instructions.			☐Complies ☐Does Not ☐Not Observable ☐Not Applicable	
402.2.9 [FO6][1]	Conditioned basement wall insulation depth of burial or distance from top of wall.	____ ft	____ ft	☐Complies ☐Does Not ☐Not Observable ☐Not Applicable	*See the Envelope Assemblies table for values.*
303.2.1 [FO11][2]	A protective covering is installed to protect exposed exterior insulation and extends a minimum of 6 in. below grade.			☐Complies ☐Does Not ☐Not Observable ☐Not Applicable	
403.9 [FO12][2]	Snow- and ice-melting system controls installed.			☐Complies ☐Does Not ☐Not Observable ☐Not Applicable	

Additional Comments/Assumptions:

1 High Impact (Tier 1) 2 Medium Impact (Tier 2) 3 Low Impact (Tier 3)

Section # & Req.ID	Framing / Rough-In Inspection	Plans Verified Value	Field Verified Value	Complies?	Comments/Assumptions
402.1.1, 402.3.4 [FR1][1]	Door U-factor.	U-____	U-____	☐Complies ☐Does Not ☐Not Observable ☐Not Applicable	*See the Envelope Assemblies table for values.*
402.1.1, 402.3.1, 402.3.3, 402.5 [FR2][1]	Glazing U-factor (area-weighted average).	U-____	U-____	☐Complies ☐Does Not ☐Not Observable ☐Not Applicable	*See the Envelope Assemblies table for values.*
303.1.3 [FR4][1]	U-factors of fenestration products are determined in accordance with the NFRC test procedure or taken from the default table.			☐Complies ☐Does Not ☐Not Observable ☐Not Applicable	
402.4.1.1 [FR23][1]	Air barrier and thermal barrier installed per manufacturer's instructions.			☐Complies ☐Does Not ☐Not Observable ☐Not Applicable	
402.4.3 [FR20][1]	Fenestration that is not site built is listed and labeled as meeting AAMA /WDMA/CSA 101/I.S.2/A440 or has infiltration rates per NFRC 400 that do not exceed code limits.			☐Complies ☐Does Not ☐Not Observable ☐Not Applicable	
402.4.5 [FR16][2]	IC-rated recessed lighting fixtures sealed at housing/interior finish and labeled to indicate ≤2.0 cfm leakage at 75 Pa.			☐Complies ☐Does Not ☐Not Observable ☐Not Applicable	
403.3.1 [FR12][1]	Supply and return ducts in attics insulated >= R-8 where duct is >= 3 inches in diameter and >= R-6 where < 3 inches. Supply and return ducts in other portions of the building insulated >= R-6 for diameter >= 3 inches and R-4.2 for < 3 inches in diameter.			☐Complies ☐Does Not ☐Not Observable ☐Not Applicable	
403.3.2 [FR13][1]	Ducts, air handlers and filter boxes are sealed with joints/seams compliant with International Mechanical Code or International Residential Code, as applicable.			☐Complies ☐Does Not ☐Not Observable ☐Not Applicable	
403.3.5 [FR15][3]	Building cavities are not used as ducts or plenums.			☐Complies ☐Does Not ☐Not Observable ☐Not Applicable	
403.4 [FR17][2]	HVAC piping conveying fluids above 105 ºF or chilled fluids below 55 ºF are insulated to ≥R-3.	R-____	R-____	☐Complies ☐Does Not ☐Not Observable ☐Not Applicable	
403.4.1 [FR24][1]	Protection of insulation on HVAC piping.			☐Complies ☐Does Not ☐Not Observable ☐Not Applicable	
403.5.3 [FR18][2]	Hot water pipes are insulated to ≥R-3.	R-____	R-____	☐Complies ☐Does Not ☐Not Observable ☐Not Applicable	

1 High Impact (Tier 1) 2 Medium Impact (Tier 2) 3 Low Impact (Tier 3)

C

Section # & Req.ID	Framing / Rough-In Inspection	Plans Verified Value	Field Verified Value	Complies?	Comments/Assumptions
403.6 [FR19][2]	Automatic or gravity dampers are installed on all outdoor air intakes and exhausts.			☐Complies ☐Does Not ☐Not Observable ☐Not Applicable	

Additional Comments/Assumptions:

1 High Impact (Tier 1) 2 Medium Impact (Tier 2) 3 Low Impact (Tier 3)

Section # & Req.ID	Final Inspection Provisions	Plans Verified Value	Field Verified Value	Complies?	Comments/Assumptions
402.1.1, 402.2.1, 402.2.2, 402.2.6 [FI1][1]	Ceiling insulation R-value.	R-____ ☐ Wood ☐ Steel	R-____ ☐ Wood ☐ Steel	☐Complies ☐Does Not ☐Not Observable ☐Not Applicable	*See the Envelope Assemblies table for values.*
303.1.1.1, 303.2 [FI2][1]	Ceiling insulation installed per manufacturer's instructions. Blown insulation marked every 300 ft².			☐Complies ☐Does Not ☐Not Observable ☐Not Applicable	
402.2.3 [FI22][2]	Vented attics with air permeable insulation include baffle adjacent to soffit and eave vents that extends over insulation.			☐Complies ☐Does Not ☐Not Observable ☐Not Applicable	
402.2.4 [FI3][1]	Attic access hatch and door insulation ≥R-value of the adjacent assembly.	R-____	R-____	☐Complies ☐Does Not ☐Not Observable ☐Not Applicable	
402.4.1.2 [FI17][1]	Blower door test @ 50 Pa. <=5 ach in Climate Zones 1-2, and <=3 ach in Climate Zones 3-8.	ACH 50 =____	ACH 50 =____	☐Complies ☐Does Not ☐Not Observable ☐Not Applicable	
403.3.3 [FI27][1]	Ducts are pressure tested to determine air leakage with either: Rough-in test: Total leakage measured with a pressure differential of 0.1 inch w.g. across the system including the manufacturer's air handler enclosure if installed at time of test. Postconstruction test: Total leakage measured with a pressure differential of 0.1 inch w.g. across the entire system including the manufacturer's air handler enclosure.	____ cfm/100 ft²	____ cfm/100 ft²	☐Complies ☐Does Not ☐Not Observable ☐Not Applicable	
403.3.4 [FI4][1]	Duct tightness test result of <=4 cfm/100 ft2 across the system or <=3 cfm/100 ft2 without air handler @ 25 Pa. For rough-in tests, verification may need to occur during Framing Inspection.	____ cfm/100 ft²	____ cfm/100 ft²	☐Complies ☐Does Not ☐Not Observable ☐Not Applicable	
403.3.2.1 [FI24][1]	Air handler leakage designated by manufacturer at <=2% of design air flow.			☐Complies ☐Does Not ☐Not Observable ☐Not Applicable	
403.1.1 [FI9][2]	Programmable thermostats installed for control of primary heating and cooling systems and initially set by manufacturer to code specifications.			☐Complies ☐Does Not ☐Not Observable ☐Not Applicable	
403.1.2 [FI10][2]	Heat pump thermostat installed on heat pumps.			☐Complies ☐Does Not ☐Not Observable ☐Not Applicable	
403.5.1 [FI11][2]	Circulating service hot water systems have automatic or accessible manual controls.			☐Complies ☐Does Not ☐Not Observable ☐Not Applicable	

1 High Impact (Tier 1) 2 Medium Impact (Tier 2) 3 Low Impact (Tier 3)

Section # & Req.ID	Final Inspection Provisions	Plans Verified Value	Field Verified Value	Complies?	Comments/Assumptions
403.6.1 [FI25][2]	All mechanical ventilation system fans not part of tested and listed HVAC equipment meet efficacy and air flow limits per Table R403.6.1.			☐Complies ☐Does Not ☐Not Observable ☐Not Applicable	
403.2 [FI26][2]	Hot water boilers supplying heat through one- or two-pipe heating systems have outdoor setback control to lower boiler water temperature based on outdoor temperature.			☐Complies ☐Does Not ☐Not Observable ☐Not Applicable	
403.5.1.1 [FI28][2]	Heated water circulation systems have a circulation pump. The system return pipe is a dedicated return pipe or a cold water supply pipe. Gravity and thermos-syphon circulation systems are not present. Controls for circulating hot water system pumps start the pump with signal for hot water demand within the occupancy. Controls automatically turn off the pump when water is in circulation loop is at set-point temperature and no demand for hot water exists.			☐Complies ☐Does Not ☐Not Observable ☐Not Applicable	
403.5.1.2 [FI29][2]	Electric heat trace systems comply with IEEE 515.1 or UL 515. Controls automatically adjust the energy input to the heat tracing to maintain the desired water temperature in the piping.			☐Complies ☐Does Not ☐Not Observable ☐Not Applicable	
403.5.2 [FI30][2]	Demand recirculation water systems have controls that manage operation of the pump and limit the temperature of the water entering the cold water piping to <= 104ºF.			☐Complies ☐Does Not ☐Not Observable ☐Not Applicable	
403.5.4 [FI31][2]	Drain water heat recovery units tested in accordance with CSA B55.1. Potable water-side pressure loss of drain water heat recovery units < 3 psi for individual units connected to one or two showers. Potable water-side pressure loss of drain water heat recovery units < 2 psi for individual units connected to three or more showers.			☐Complies ☐Does Not ☐Not Observable ☐Not Applicable	
404.1 [FI6][1]	90% or more of permanent fixtures have high efficacy lamps.			☐Complies ☐Does Not ☐Not Observable ☐Not Applicable	
404.1.1 [FI23][3]	Fuel gas lighting systems have no continuous pilot light.			☐Complies ☐Does Not ☐Not Observable ☐Not Applicable	
401.3 [FI7][2]	Compliance certificate posted.			☐Complies ☐Does Not ☐Not Observable ☐Not Applicable	

1 High Impact (Tier 1) 2 Medium Impact (Tier 2) 3 Low Impact (Tier 3)

Section # & Req.ID	Final Inspection Provisions	Plans Verified Value	Field Verified Value	Complies?	Comments/Assumptions
303.3 [FI18][3]	Manufacturer manuals for mechanical and water heating systems have been provided.			☐Complies ☐Does Not ☐Not Observable ☐Not Applicable	

Additional Comments/Assumptions:

1 High Impact (Tier 1) 2 Medium Impact (Tier 2) 3 Low Impact (Tier 3)

B

2018 IECC Energy Efficiency Certificate

Insulation Rating	R-Value	
Above-Grade Wall	21.00	
Below-Grade Wall	13.00	
Floor	0.00	
Ceiling / Roof	49.00	
Ductwork (unconditioned spaces):	____	
Glass & Door Rating	**U-Factor**	**SHGC**
Window	0.30	0.24
Door	0.30	0.25
Heating & Cooling Equipment	**Efficiency**	
Heating System:____	____	
Cooling System:____	____	
Water Heater:____	____	

Name: ____ **Date:**____

Comments

A

FILE NAME:

GTM ARCHITECTS

7735 OLD GEORGETOWN ROAD
SUITE 700
BETHESDA, MD 20814
(240)333-2000
(240)333-2001 FAX
WWW.GTMARCHITECTS.COM

GTM

Seal

STATE OF MARYLAND · GEORGE E. MYERS · 8385 · ARCHITECT

I certify that these documents were prepared or approved by me, and that I am a duly licensed architect under the laws of the State of Maryland, license number 8385, Expiration Date: 12-06-2022.

Consultant

Project

23 HIGH STREET LOT 2

23 HIGH STREET, BROOKEVILLE, MD 20833

Owner

Developer

Issue Description	*Date*
PERMIT SET	4-11-2022

GTM Project No.	18.0320
Checked By	GTM
Drawn By	LEO/NW
Scale	AS NOTED

Sheet Title

ENERGY CALCS

Sheet No.

EC003

COPYRIGHT, 2022 GTM ARCHITECTS, INC.

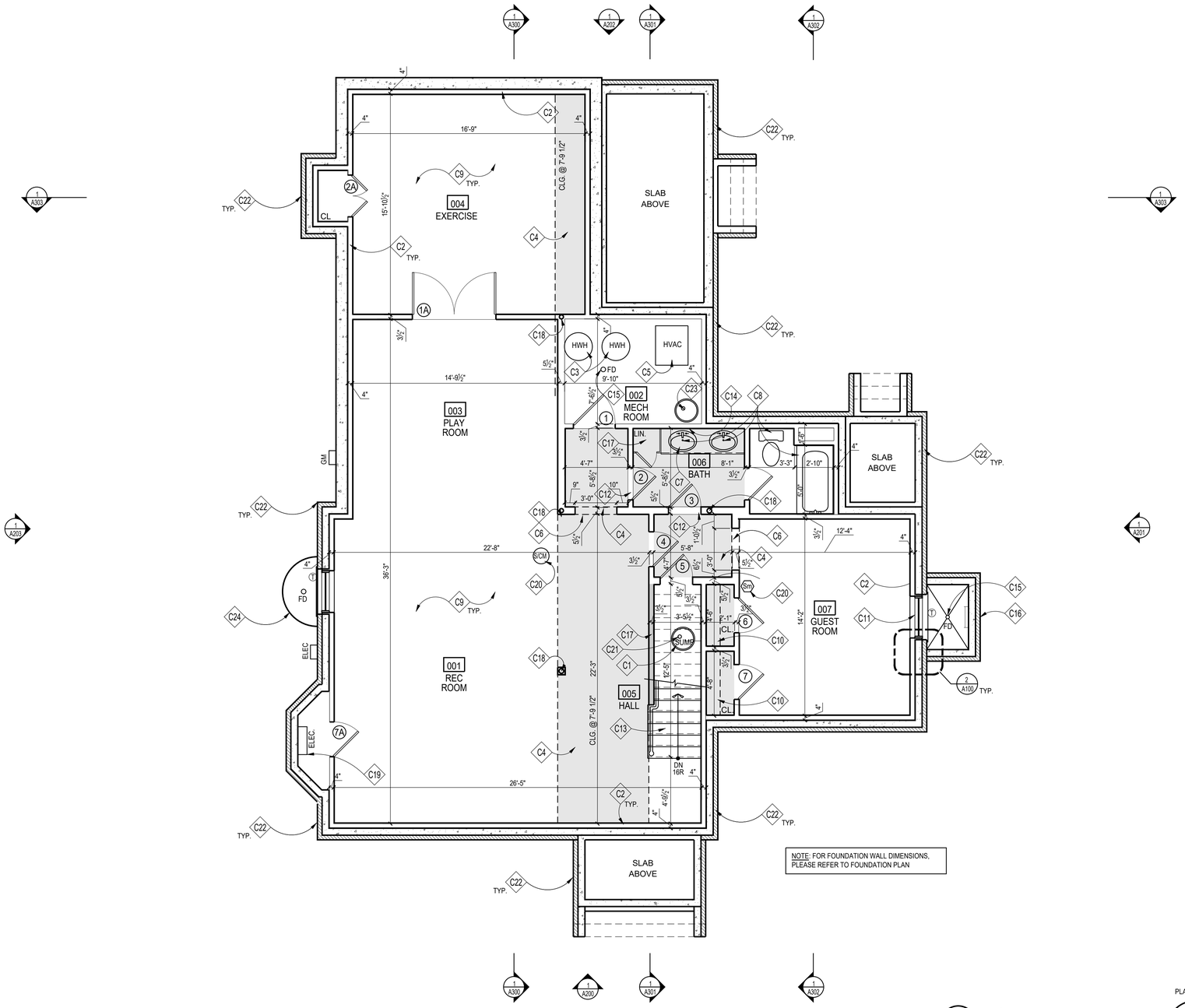

NOTE: FOR FOUNDATION WALL DIMENSIONS, PLEASE REFER TO FOUNDATION PLAN

1 BASEMENT PLAN
SCALE: 1/4"=1'=0

PLAN NORTH

CONSTRUCTION NOTES

- C1 SUMP PUMP WITH WATER POWERED SUMP BACKUP; LOCATION T.B.D.
- C2 FUR OUT WALLS W/ FULL 2x4's W/ R-13 BATT INSULATION, TYP.; PROVIDE P.T. SILL; HOLD 1/2" OFF FOUNDATION WALL
- C3 HOT WATER HEATER, LOCATION APPROXIMATE, SEE SPECIFICATIONS SHEET '002'
- C4 TONED AREA INDICATES LOWERED CEILING TO ALLOW FOR DUCTWORK, BEAMS AND/OR AESTHETIC APPEAL
- C5 HVAC, SEE SPECIFICATIONS SHEET '002'
- C6 CASED OPENING @ 6'-8" FINISHED
- C7 VANITY W/ SINK, FAUCET & COUNTERTOP; T.B.S.
- C8 PLUMBING FIXTURES & ACCESSORIES T.B.S.
- C9 REINF. CONC. SLAB ON GRADE; SEE FOUNDATION PLAN
- C10 PROVIDE CLOSET ROD & SHELF
- C11 EGRESS WINDOW; MAX. 44" SILL HEIGHT FROM A.F.F.
- C12 MARBLE THRESHOLD, T.B.S.; SEE DETAIL '5/A304'
- C13 WD. STEPS; 1x RISERS W/ TREADS TO MATCH H.W.F.; WOOD RAILING T.B.S, SEE DETAILS '1&6/A304', FOLLOW IRC 2018 FOR STAIR AND RAILING
- C14 1/4" POLISHED PLATE GLASS MIRROR, T.B.S.
- C15 FLOOR DRAIN. LOCATION T.B.D., RUN TO SUMP PUMP
- C16 WINDOW WELL; EGRESS LADDER & COVER AS REQ'D. BY 2018 IRC DRAIN TO SUMP PUMP OR DAYLIGHT
- C17 (5) EQUALLY SPACED SHELVES, FLOOR TO CEILING, PTD.
- C18 STEEL COLUMN, SEE FOUNDATION AND FRAMING PLANS
- C19 APPROXIMATE ELECTRICAL PANEL LOCATION; FIELD VERIFY FINAL LOCATION
- C20 INSTALL INTERCONNECTED & HARD-WIRED SMOKE DETECTORS/ SMOKE & CARBON MONOXIDE DETECTORS IN ACCORDANCE W/ IRC 2018
- C21 RADON MITIGATION PIPE, SEE SPECIFICATIONS SHEET FOR DETAILS
- C22 BRICK VENEER TBS, SEE ELEVATIONS
- C23 EJECTOR PUMP PER CIVIL
- C24 PREFABRICATED WINDOW WELL, PROVIDE GRAVEL BASE AND DRAIN TO SUMP OR DAYLIGHT

NOTE:

1. UNLESS INDICATED OTHERWISE, DIMENSIONS ARE TO FACE OF FRAMING
2. VERIFY ALL EXTERIOR RISER + TREAD DIMENSIONS IN THE FIELD
3. SEE DETAILS '2&7/A304' FOR ENERGY EFFICIENT FRAMING DETAILS
4. PROVIDE MINERAL WOOL SOUND INSULATION IN WALLS, CEILING, + FLOOR OF THE FOLLOWING ROOMS (U.N.O.):

102	STORAGE ROOM
106	BATH

5. (T) = TEMPERED GLASS

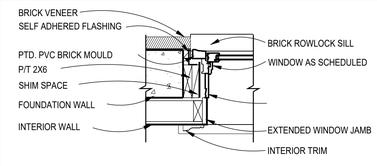

2 TYP. BASEMENT WINDOW/DOOR JAMB
Scale: 1"=1'-0"

WALL TYPES

TYPICAL NEW EXTERIOR WALL; 10" CONC. WALL; SEE FOUNDATION PLAN; FUR WHERE SHOWN WITH 2x4 STUDS @ 16" O.C.,
(SEE THERMAL ENVELOPE, SHEET "EC001" FOR INSULATION INFORMATION)

TYPICAL NON-BEARING INTERIOR PARTITION; 2"x4" STUDS 16" O.C. W/ ½" GYP. BD. EACH SIDE; INCREASE WALL THICKNESS AS SHOWN TO ALIGN FINISHES WHERE SHOWN

GTM ARCHITECTS

7735 OLD GEORGETOWN ROAD
SUITE 700
BETHESDA, MD 20814
(240)333-2000
(240)333-2001 FAX
WWW.GTMARCHITECTS.COM

Seal

I certify that these documents were prepared or approved by me, and that I am a duly licensed architect under the laws of the State of Maryland License number 8085, Expiration Date: 06-06-2024.

Consultant

Project

23 HIGH STREET
LOT 2

23 HIGH STREET, BROOKEVILLE, MD 20833

Owner

Developer

PERMIT SET	4-11-2022

Issue Description	*Date*

GTM Project No.	18.0320
Checked By	GTM
Drawn By	LEO/NW
Scale	AS NOTED

Sheet Title

BASEMENT PLAN

Sheet No.

A100

COPYRIGHT, 2022 GTM ARCHITECTS, INC.

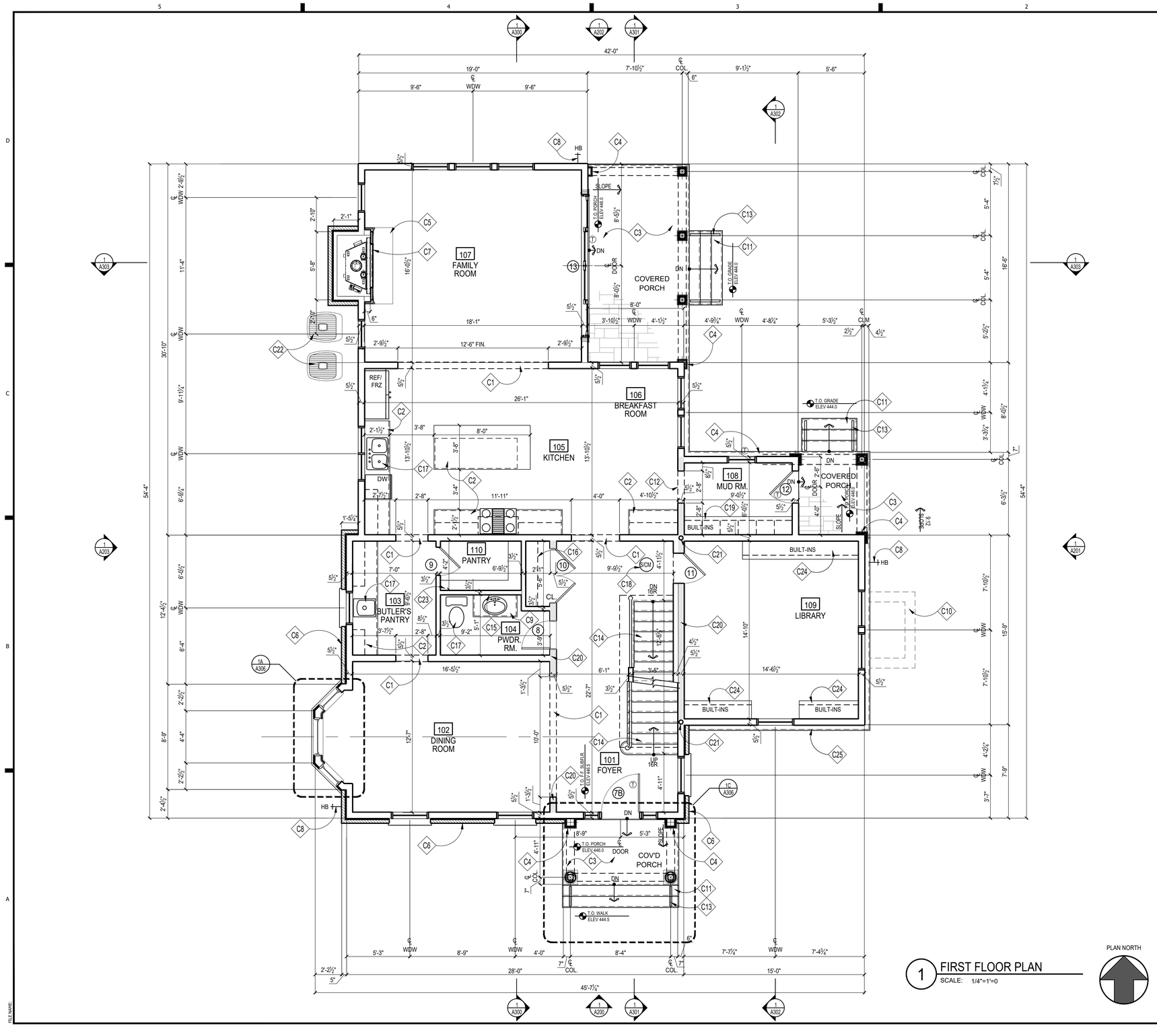

1 FIRST FLOOR PLAN
SCALE: 1/4"=1'=0

PLAN NORTH

CONSTRUCTION NOTES

- C1 CASED OPENING @ 8'-0" FINISHED
- C2 KITCHEN CABINETS, APPLIANCES + COUNTER TOPS, ETC. T.B.S.
- C3 FLAGSTONE @ PORCH, T.B.S
- C4 PTD. PILASTER TO MATCH COLUMNS; SEE ELEVATIONS
- C5 HEARTH, MATERIAL T.B.S.
- C6 BRICK VENEER TBS, SEE ELEVATIONS
- C7 B-VENT GAS FIREPLACE, T.B.S. INSTALL PER MANUFACTURER REQUIREMENTS
- C8 FROST PROOF HOSE BIB BELOW; CONFIRM LOCATION
- C9 VANITY W/ SINK, FAUCET & COUNTERTOP; T.B.S.
- C10 WINDOW WELL BELOW; SEE DETAIL '10/A304'
- C11 CONC. STAIRS TO GRADE W/ BRICK RISERS AND FLAGSTONE TREADS, T.B.S., F.V. RISE/RUN
- C12 MARBLE THRESHOLD, T.B.S.; SEE DETAIL '5/A304'
- C13 PROVIDE GUARDRAIL&HANDRAIL TO COMPLY W/ IRC 2018
- C14 WD. STEPS; 1x RISERS W/ TREADS TO MATCH H.W.F.; WOOD RAILING T.B.S, SEE DETAILS '1&6/A304', FOLLOW IRC 2018 FOR STAIR AND RAILING
- C15 1/4" POLISHED PLATE GLASS MIRROR, T.B.S.
- C16 PROVIDE CLOSET ROD & SHELF
- C17 PLUMBING FIXTURES & ACCESSORIES T.B.S.
- C18 HARD-WIRED SMOKE DETECTOR/CARBON MONOXIDE COMBO UNIT PER IRC 2018
- C19 BUILT-IN BENCH W/ LOCKERS & HOOKS, SEE DETAILS
- C20 DARKER TONED WALL INDICATES 2x6 LOAD BEARING WALL @ 16" O.C.
- C21 STEEL COLUMN, SEE FOUNDATION AND FRAMING PLANS
- C22 LOCATION OF CONDENSOR UNIT; T.B.D.
- C23 (5) EQUALLY SPACED SHELVES, FLOOR TO CEILING, PTD.
- C24 BUILT-INS; T.B.S.
- C25 NEW BRICK WATERTABLE WITH SLOPED BRICK CAP @ BASE AS SHOWN, SEE ELEVATIONS

NOTE:

1. UNLESS INDICATED OTHERWISE, DIMENSIONS ARE TO FACE OF FRAMING
2. VERIFY ALL EXTERIOR RISER + TREAD DIMENSIONS IN THE FIELD
3. SEE DETAILS '2&7/A304' FOR ENERGY EFFICIENT FRAMING DETAILS
4. PROVIDE MINERAL WOOL SOUND INSULATION IN WALLS, CEILING, + FLOOR OF THE FOLLOWING ROOMS (U.N.O.):
   104 POWDER ROOM
5. Ⓣ = TEMPERED GLASS

WALL TYPES

TYPICAL NEW EXTERIOR WALL; 2x6 WOOD STUDS 16" O.C., W/ INSULATION (SEE THERMAL ENVELOPE, SHEET "EC001" FOR INSULATION LOCATION & INFORMATION) W/ , ½" EXTERIOR SHEATHING, AIR & WATER RESISTIVE BUILDING WRAP, & SIDING; SEE ELEVATIONS. INTERIOR FINISH TO BE ½" GYP. BD.

TYPICAL NON-BEARING INTERIOR PARTITION; U.N.O. 2x4 WOOD STUDS 16" O.C. W/ ½" GYP. BD. EACH SIDE, INCREASE WALL THICKNESS AS SHOWN TO ALIGN FINISHES WHERE SHOWN

GTM ARCHITECTS

7735 OLD GEORGETOWN ROAD
SUITE 700
BETHESDA, MD 20814
(240)333-2000
(240)333-2001 FAX
WWW.GTMARCHITECTS.COM

Seal

I certify that these documents were prepared or approved by me, and that I am a duly licensed architect under the laws of the State of Maryland, license number 8885, Expiration Date: 12-06-2022.

Consultant

Project
23 HIGH STREET
LOT 2
23 HIGH STREET, BROOKEVILLE, MD 20833

Owner

Developer

Issue Description	Date
PERMIT SET	4-11-2022

GTM Project No.	18.0320
Checked By	GTM
Drawn By	LEO/NW
Scale	AS NOTED

Sheet Title
FIRST FLOOR PLAN

Sheet No.
A101

COPYRIGHT, 2022 GTM ARCHITECTS, INC.

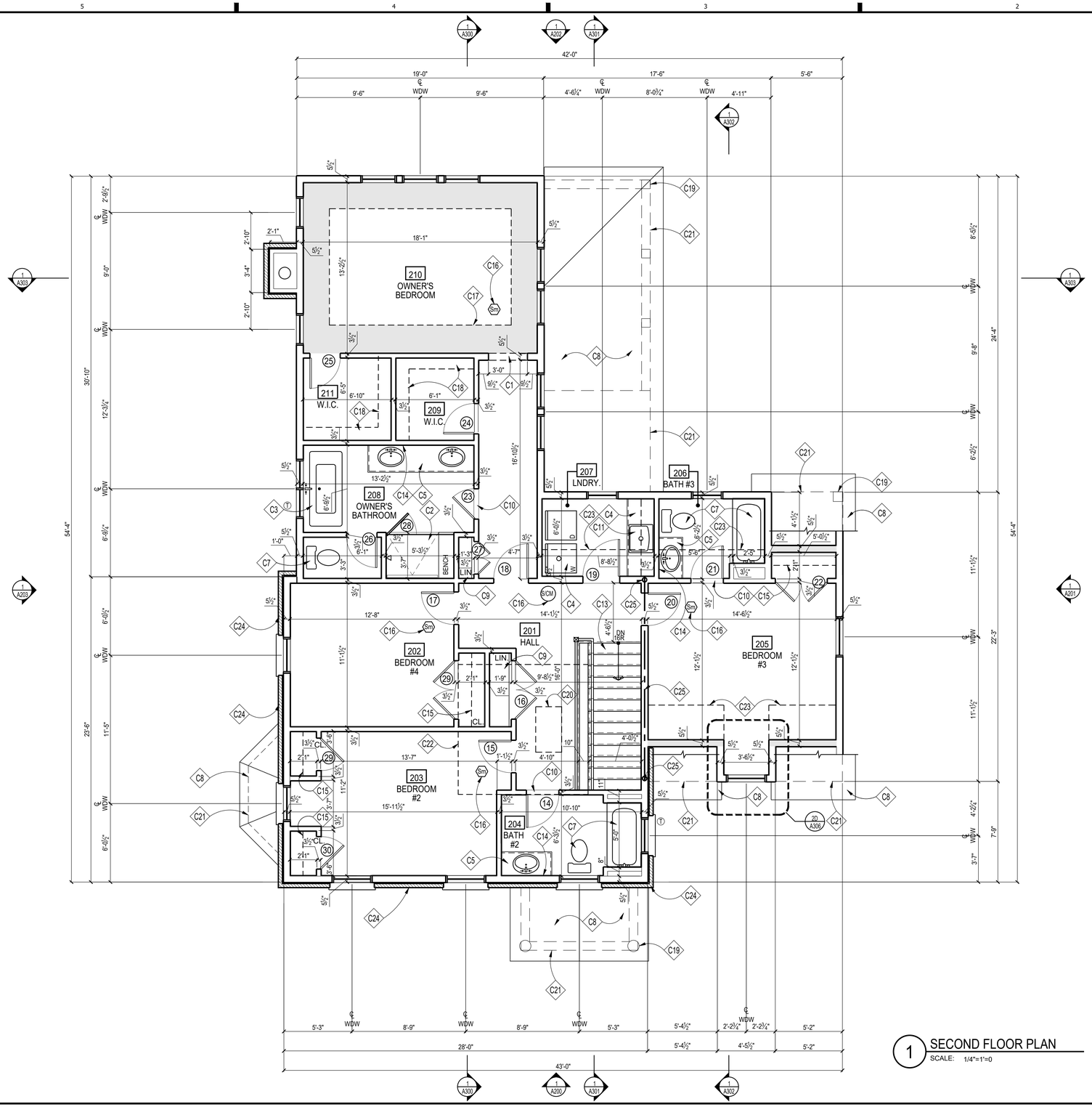

1 SECOND FLOOR PLAN
SCALE: 1/4"=1'=0

PLAN NORTH

CONSTRUCTION NOTES

- C1 CASED OPENING @ 7'-0" FINISHED
- C2 TILED SHOWER AND TILED BENCH; REFER TO DETAIL '14&15/A304', W/ TEMPERED GLASS ENCLOSURE & DOOR
- C3 FREE STANDING SOAKING TUB, T.B.S.
- C4 LAUNDRY ROOM CABINETS, APPLIANCES + COUNTER TOPS, ETC. T.B.S.; PROVIDE OVERFLOW PAN AND DRAIN UNDER WASHER
- C5 VANITY W/ SINK, FAUCET & COUNTERTOP; T.B.S.
- C6 NOT USED
- C7 PLUMBING FIXTURES & ACCESSORIES T.B.S.
- C8 ROOF BELOW; SEE ROOF PLAN
- C9 PROVIDE (5) EQUALLY SPACED SHELVES, PTD.
- C10 MARBLE THRESHOLD, T.B.S.; SEE DETAIL '5/A304'
- C11 OPTIONAL LAUNDRY SINK, T.B.S.
- C12 NOT USED
- C13 WD. STEPS; 1x RISERS W/ TREADS TO MATCH H.W.F.; WOOD RAILING T.B.S, SEE DETAILS '1&6/A304', FOLLOW IRC 2018 FOR STAIR AND RAILING
- C14 1/4" POLISHED PLATE GLASS MIRROR, T.B.S.
- C15 PROVIDE CLOSET ROD & SHELF
- C16 HARD-WIRED SMOKE DETECTOR/CARBON MONOXIDE COMBO UNIT PER IRC 2018
- C17 OPTIONAL TRAY CEILING ABOVE, COORD. W/ROOF TRUSSES
- C18 CUSTOM CLOSET SYSTEM, COORD. W/ OWNER
- C19 DASHED LINE OF COLUMN BELOW
- C20 PULL DOWN ATTIC ACCESS STAIR FRAME W/ BEAM ABOVE
- C21 DASHED LINE INDICATES OUTSIDE FACE OF BEAM
- C22 DASHED LINE INDICATES ATTIC PLATFORM ABOVE
- C23 DASHED LINE INDICATES SLOPED CEILING ABOVE
- C24 BRICK VENEER TBS, SEE ELEVATIONS
- C25 STEEL STRUCTURAL MEMBERS TO SUPPORT BRICK ABOVE

NOTE:

1. UNLESS INDICATED OTHERWISE, DIMENSIONS ARE TO FACE OF FRAMING
2. SEE DETAILS '2&7/A304' FOR ENERGY EFFICIENT FRAMING DETAILS
3. PROVIDE MINERAL WOOL SOUND INSULATION IN WALLS, CEILING, + FLOOR OF THE FOLLOWING ROOMS (U.N.O.):

207	LAUNDRY ROOM
208	OWNER'S BATH
204	BATH #2
206	BATH #3

4. Ⓣ = TEMPERED GLASS

WALL TYPES

TYPICAL NEW EXTERIOR WALL; 2x6 WOOD STUDS 16" O.C., W/ INSULATION (SEE THERMAL ENVELOPE, SHEET "EC001" FOR INSULATION LOCATION & INFORMATION) W/ , ½" EXTERIOR SHEATHING, AIR & WATER RESISTIVE BUILDING WRAP, & SIDING; SEE ELEVATIONS. INTERIOR FINISH TO BE ½" GYP. BD.

TYPICAL NON-BEARING INTERIOR PARTITION; U.N.O. 2x4 WOOD STUDS 16" O.C. W/ ½" GYP. BD. EACH SIDE, INCREASE WALL THICKNESS AS SHOWN TO ALIGN FINISHES WHERE SHOWN

GTM ARCHITECTS

7735 OLD GEORGETOWN ROAD
SUITE 700
BETHESDA, MD 20814
(240)333-2000
(240)333-2001 FAX
WWW.GTMARCHITECTS.COM

Seal

I certify that these documents were prepared or approved by me, and that I am a duly licensed architect under the laws of the State of Maryland, license number 8385, Expiration Date: 12-06-2022.

Consultant

Project

23 HIGH STREET LOT 2

23 HIGH STREET, BROOKEVILLE, MD 20833

Owner

Developer

Issue Description	Date
PERMIT SET	4-11-2022

GTM Project No.	18.0320
Checked By	GTM
Drawn By	LEO/NW
Scale	AS NOTED

Sheet Title

SECOND FLOOR PLAN

Sheet No.

A102

COPYRIGHT, 2022 GTM ARCHITECTS, INC.

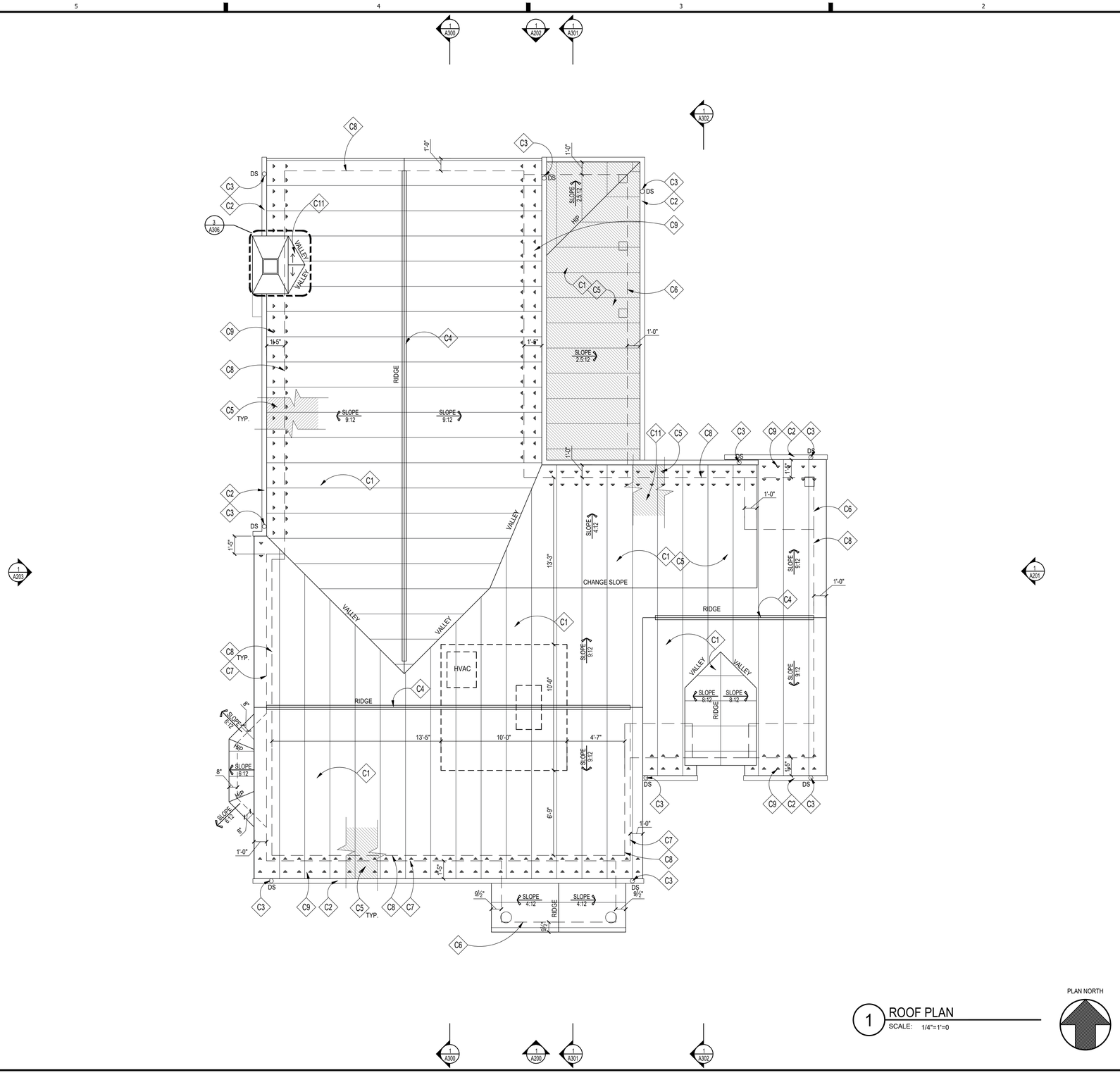

1 ROOF PLAN
SCALE: 1/4"=1'=0

PLAN NORTH

ROOFING NOTES

C1	PTD. STANDING SEAM METAL ROOFING,TBS
C2	OGEE GUTTER T.B.S., TYP.
C3	4" ROUND DOWNSPOUT T.B.S., TYP.
C4	STANDING SEAM METAL ROOF, T.B.S.
C5	SEE NOTE #1 UNDER GENERAL ROOFING NOTES, TYP.
C6	DASHED LINE INDICATES FACE OF BEAM BELOW
C7	DASHED LINE INDICATES FACE OF BRICK BELOW
C8	DASHED LINE INDICATES FACE OF FRAMING BELOW
C9	PAD-STYLE MTL. SNOW GUARDS SPACED IN TWO ROWS, 2 PER PANEL INSTALL PER MANUF. SPECS
C10	HALF ROUND METAL GUTTER
C11	RADON MITIGATION PIPE, SEE SPECIFICATIONS SHEET FOR DETAILS

GENERAL ROOFING NOTES

1. PROVIDE SELF-ADHERING, 40 MIL ICE AND WATER GUARD UNDERLAYMENT UNDER SHINGLES AT ALL VALLEYS AND FROM LOWEST EDGE OF ROOF SURFACES TO A POINT AT LEAST 24" INSIDE THE EXTERIOR WALL LINE, AND ON ALL AREAS WITH A SLOPE LESS THAN 4:12.
2. SEE FRAMING PLAN FOR OVERBUILD AREAS
3. DOTTED LINE INDICATES LINE OF BUILDING BELOW

GTM ARCHITECTS

7735 OLD GEORGETOWN ROAD
SUITE 700
BETHESDA, MD 20814
(240)333-2000
(240)333-2001 FAX
WWW.GTMARCHITECTS.COM

Seal

I certify that these documents were prepared or approved by me, and that I am a duly licensed architect under the laws of the State of Maryland, license number 8385, Expiration Date: 12-06-2022.

Consultant

Project
23 HIGH STREET LOT 2
23 HIGH STREET, BROOKEVILLE, MD 20833

Owner

Developer

Issue Description	Date
PERMIT SET	4-11-2022

GTM Project No.	18.0320
Checked By	GTM
Drawn By	LEO/NW
Scale	AS NOTED

Sheet Title
ROOF PLAN

Sheet No.
A103

COPYRIGHT, 2022 GTM ARCHITECTS, INC.

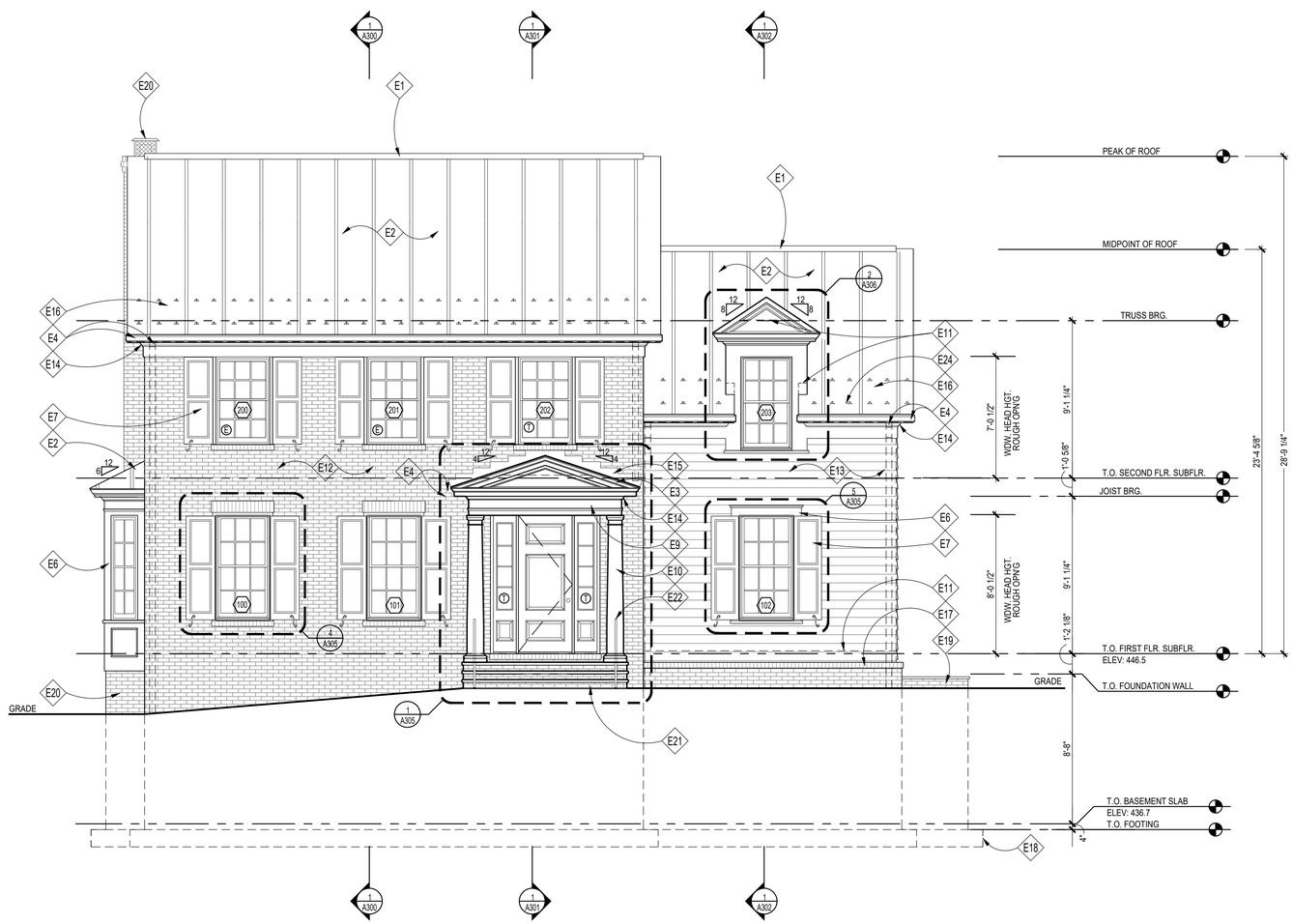

1 FRONT ELEVATION
SCALE: 1/4"=1'=0

ELEVATION NOTES

E1	RIDGE VENT W/ PTD. METAL CAP TO MATCH ROOFING, TYP.; REMOVE IF USING SPRAY FOAM INSULATION, SEE DETAIL '11/A304'
E2	PTD. STANDING SEAM METAL ROOF, T.B.S.
E3	PTD. 1X6 WOOD RAKE/FASCIA
E4	GUTTER (ON 1x6 PTD. WD FASCIA BD.) & 4" Ø DOWNSPOUT, T.B.S.
E5	NOT USED
E6	PTD. 1X6 WOOD WINDOW HEAD & JAMB TRIM W/ PAINTED HISTORIC TRIM
E7	PTD. OPERABLE WD. SHUTTERS W/ HISTORIC HARDWARE, T.B.S., SEE DETAILS '4&5/A305'
E8	PTD. 1X WD. TRIM; CUT TO FIT @ FRONT OF DORMERS
E9	PTD. 1X12 WOOD FRIEZE BD ALIGN W/ TOP OF WINDOWS/DOORS AND PORCH COLUMNS
E10	PTD 12" TAPERED ROUND WOOD COLUMN
E11	CONCEALED FLASHING & COUNTER FLASHING @ ALL VERTICAL TRANSITIONS, TYP. EXTEND MIN. 8" BEHIND SIDING. COLOR T.B.S.
E12	BRICK VENEER, TO BE SELECTED
E13	PTD. HARDIEPLANK LAP SIDING,W/ MITERED CORNERS 6" EXPOSURE
E14	PTD. WD. CROWN MLD. ON PTD. 1X BACKER
E15	PTD. ALUM BASE & COUNTER FLASHING @ VERTICAL TRANSITION; EXTEND MIN. 8" UP FACE OF CHIMNEY/WALL
E16	PAD-STYLE MTL. SNOW GUARDS SPACED IN TWO ROWS, 2 PER PANEL
E17	SLOPED BRICK ROWLOCK SILL
E18	DASHED LINE INDICATES FOOTING BELOW GRADE
E19	EGRESS WINDOW WELL W/ SLOPED FLAGSTONE CAP OVER CONC. FOUNDATION WALL
E20	BLACK GALVANIZED STEEL FLUE CHIMNEY CAP BY HOME SAVER (SINGLE FLUE) OR APPROVED EQUAL W/ FLAT SEAM METAL CAP, COLOR T.B.S.
E21	CONC. PORCH & STEPS TO GRADE W/ BRICK RISERS AND FLAGSTONE TREADS
E22	PTD. 34"H. MTL HANDRAIL PER IRC 2018

NOTE:

1. VERIFY ALL EXTERIOR RISER & TREAD DIMENSIONS IN FIELD
2. ALL EXTERIOR WOOD TRIM TO BE TREATED FOR PROTECTION AGAINST MOISTURE, ROT, FUNGAL ATTACK & INSECTS, WINDSOR-ONE+, LIFESPAN OR EQ.
3. Ⓣ = TEMPERED GLASS
   Ⓔ = EGRESS

GTM ARCHITECTS

7735 OLD GEORGETOWN ROAD
SUITE 700
BETHESDA, MD 20814
(240)333-2000
(240)333-2001 FAX
WWW.GTMARCHITECTS.COM

Seal

I certify that these documents were prepared or approved by me, and that I am a duly licensed architect under the laws of the State of Maryland, license number 8385, Expiration Date: 12-06-2022.

Consultant

Project

23 HIGH STREET LOT 2

23 HIGH STREET, BROOKEVILLE, MD 20833

Owner

Developer

PERMIT SET	4-11-2022
Issue Description	Date

GTM Project No.	18.0320
Checked By	GTM
Drawn By	LEO/NW
Scale	AS NOTED

Sheet Title

FRONT ELEVATION

Sheet No.

A200

COPYRIGHT, 2022 GTM ARCHITECTS, INC.

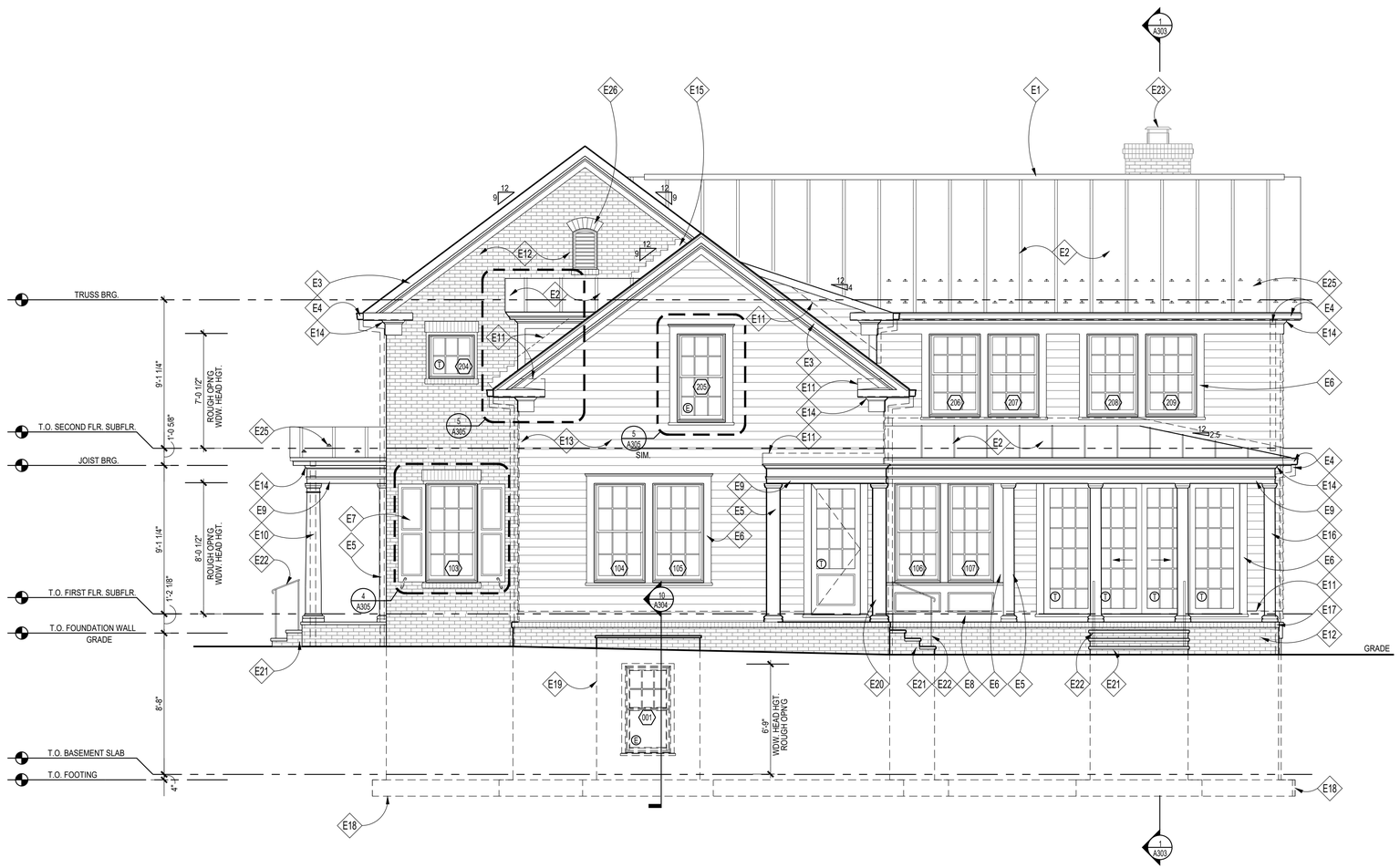

1 RIGHT SIDE ELEVATION
SCALE: 1/4"=1'=0

ELEVATION NOTES

E1	RIDGE VENT W/ PTD. METAL CAP TO MATCH ROOFING, TYP.; REMOVE IF USING SPRAY FOAM INSULATION, SEE DETAIL '11/A304'
E2	PTD. STANDING SEAM METAL ROOF, T.B.S.
E3	PTD. 1X6 WOOD RAKE/FASCIA
E4	GUTTER (ON 1x6 PTD. WD FASCIA BD.) & 4" Ø DOWNSPOUT, T.B.S.
E5	PTD. SQ. WD PILASTER TO MATCH ADJACENT COLUMN
E6	PTD. 1X6 WOOD WINDOW HEAD & JAMB TRIM W/ PAINTED HISTORIC TRIM
E7	PTD. OPERABLE WD. SHUTTERS W/ HISTORIC HARDWARE, T.B.S., SEE DETAILS '4&5/A305'
E8	PTD. 1X WD. TRIM; CUT TO FIT @ FRONT OF DORMERS
E9	PTD. 1X12 WOOD FRIEZE BD ALIGN W/ TOP OF WINDOWS/DOORS AND PORCH COLUMNS
E10	PTD 12" TAPERED ROUND WOOD COLUMN
E11	CONCEALED FLASHING & COUNTER FLASHING @ ALL VERTICAL TRANSITIONS, TYP. EXTEND MIN. 8" BEHIND SIDING. COLOR T.B.S.
E12	BRICK VENEER, TO BE SELECTED
E13	PTD. HARDIEPLANK LAP SIDING,W/ MITERED CORNERS 6" EXPOSURE
E14	PTD. WD. CROWN MLD. ON PTD. 1X BACKER
E15	PTD. ALUM BASE & COUNTER FLASHING @ VERTICAL TRANSITION; EXTEND MIN. 8" UP FACE OF CHIMNEY/WALL
E16	PTD. 8" SQ. WD COLUMN W/ NECK MOULD, TUSCAN CAP & BASE
E17	SLOPED BRICK ROWLOCK SILL
E18	DASHED LINE INDICATES FOOTING BELOW GRADE
E19	EGRESS WINDOW WELL W/ SLOPED FLAGSTONE CAP OVER CONC. FOUNDATION WALL
E20	PTD. 10" SQ. WD COLUMN W/ NECK MOULD, TUSCAN CAP & BASE
E21	CONC. PORCH & STEPS TO GRADE W/ BRICK RISERS AND FLAGSTONE TREADS
E22	PTD. 34"H. MTL HANDRAIL PER IRC 2018
E23	BLACK GALVANIZED STEEL FLUE CHIMNEY CAP BY HOME SAVER (SINGLE FLUE) OR APPROVED EQUAL W/ FLAT SEAM METAL CAP, COLOR T.B.S.
E24	FYPON EBLV 18X30 ATTIC VENT W/ INSECT SCREEN BEHIND
E25	PAD-STYLE MTL. SNOW GUARDS SPACED IN TWO ROWS, 2 PER PANEL

NOTE:

1. VERIFY ALL EXTERIOR RISER & TREAD DIMENSIONS IN FIELD
2. ALL EXTERIOR WOOD TRIM TO BE TREATED FOR PROTECTION AGAINST MOISTURE, ROT, FUNGAL ATTACK & INSECTS, WINDSOR-ONE+, LIFESPAN OR EQ.
3. Ⓣ = TEMPERED GLASS
   Ⓔ = EGRESS

GTM ARCHITECTS

7735 OLD GEORGETOWN ROAD
SUITE 700
BETHESDA, MD 20814
(240)333-2000
(240)333-2001 FAX
WWW.GTMARCHITECTS.COM

Seal

I certify that these documents were prepared or approved by me, and that I am a duly licensed architect under the laws of the State of Maryland License number 8085. Expiration Date: 12-31-2022.

Consultant

Project

23 HIGH STREET
LOT 2

23 HIGH STREET, BROOKEVILLE, MD 20833

Owner

Developer

PERMIT SET	4-11-2022

Issue Description	*Date*

GTM Project No.	18.0320
Checked By	GTM
Drawn By	LEO/NW
Scale	AS NOTED

Sheet Title

RIGHT SIDE ELEVATION

Sheet No.

A201

COPYRIGHT, 2022 GTM ARCHITECTS, INC.

FILE NAME:

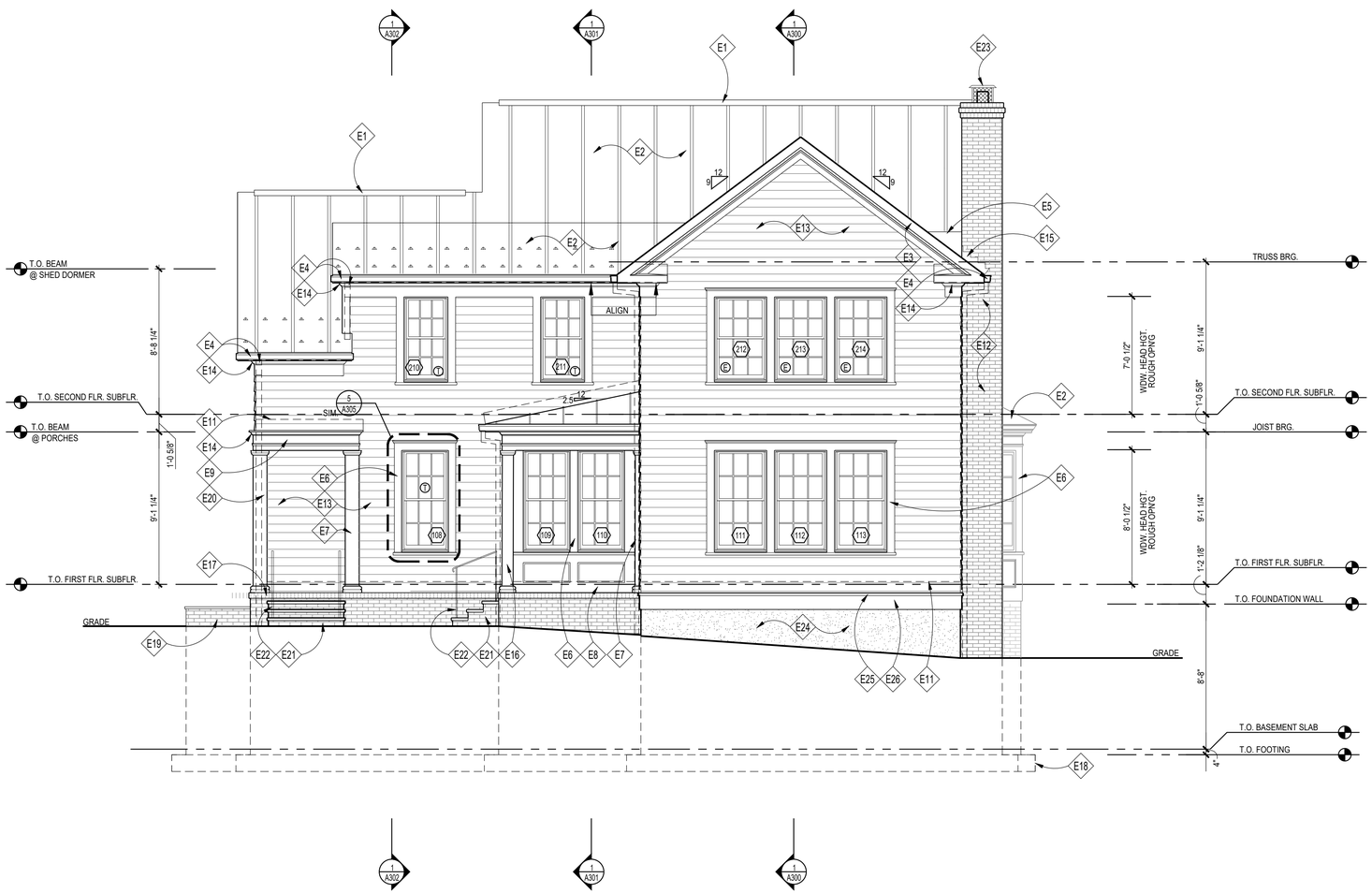

1 REAR ELEVATION

SCALE: 1/4"=1'=0

ELEVATION NOTES

E1	RIDGE VENT W/ PTD. METAL CAP TO MATCH ROOFING, TYP.; REMOVE IF USING SPRAY FOAM INSULATION, SEE DETAIL "11/A304"
E2	PTD. STANDING SEAM METAL ROOF, T.B.S.
E3	PTD. 1X6 WOOD RAKE/FASCIA
E4	GUTTER (ON 1x6 PTD. WD FASCIA BD.) & 4" Ø DOWNSPOUT, T.B.S.
E5	MTL CRICKET PER IRC, MIN 4:12 SLOPE
E6	PTD. 1X6 WOOD WINDOW HEAD & JAMB TRIM W/ PAINTED HISTORIC TRIM
E7	PTD. SQ. WD PILASTER TO MATCH ADJACENT COLUMN
E8	PTD. 1X WD. TRIM; CUT TO FIT
E9	PTD. 1X12 WOOD FRIEZE BD ALIGN W/ TOP OF WINDOWS/DOORS AND PORCH COLUMNS
E10	NOT USED
E11	CONCEALED FLASHING & COUNTER FLASHING @ ALL VERTICAL TRANSITIONS, TYP. EXTEND MIN. 8" BEHIND SIDING. COLOR T.B.S.
E12	BRICK VENEER, TO BE SELECTED
E13	PTD. HARDIEPLANK LAP SIDING,W/ MITERED CORNERS 6" EXPOSURE
E14	PTD. WD. CROWN MLD. ON PTD. 1X BACKER
E15	PTD. ALUM BASE & COUNTER FLASHING @ VERTICAL TRANSITION; EXTEND MIN. 8" UP FACE OF CHIMNEY/WALL
E16	PTD. 8" SQ. WD COLUMN W/ NECK MOULD, TUSCAN CAP & BASE
E17	SLOPED BRICK ROWLOCK SILL
E18	DASHED LINE INDICATES FOOTING BELOW GRADE
E19	EGRESS WINDOW WELL W/ SLOPED FLAGSTONE CAP OVER CONC. FOUNDATION WALL
E20	PTD. 10" SQ. WD COLUMN W/ NECK MOULD, TUSCAN CAP & BASE
E21	CONC. PORCH & STEPS TO GRADE W/ BRICK RISERS AND FLAGSTONE TREADS
E22	PTD. 34"H. MTL HANDRAIL PER IRC 2018
E23	BLACK GALVANIZED STEEL FLUE CHIMNEY CAP BY HOME SAVER (SINGLE FLUE) OR APPROVED EQUAL W/ FLAT SEAM METAL CAP, COLOR T.B.S.
E24	PARGED & PTD. CONC. FOUNDATION WALL WHERE EXPOSED
E25	PTD. SLOPED 1X WOOD DRIP CAP, SEE 13/A303 FOR DETAIL
E26	PTD. 5/4 x 10 WOOD TRIMBAND

NOTE:

1. VERIFY ALL EXTERIOR RISER & TREAD DIMENSIONS IN FIELD
2. ALL EXTERIOR WOOD TRIM TO BE TREATED FOR PROTECTION AGAINST MOISTURE, ROT, FUNGAL ATTACK & INSECTS, WINDSOR-ONE+, LIFESPAN OR EQ.
3. (T) = TEMPERED GLASS
   (E) = EGRESS

GTM ARCHITECTS

7735 OLD GEORGETOWN ROAD
SUITE 700
BETHESDA, MD 20814
(240)333-2000
(240)333-2001 FAX
WWW.GTMARCHITECTS.COM

Seal

I certify that these documents were prepared or approved by me, and that I am a duly licensed architect under the laws of the State of Maryland License number 8085. Expiration Date: 06-06-2022

Consultant

Project

23 HIGH STREET LOT 2

23 HIGH STREET, BROOKEVILLE, MD 20833

Owner

Developer

PERMIT SET	4-11-2022

Issue Description	*Date*

GTM Project No.	18.0320
Checked By	GTM
Drawn By	LEO/NW
Scale	AS NOTED

Sheet Title

REAR ELEVATION

Sheet No.

A202

COPYRIGHT, 2022 GTM ARCHITECTS, INC.

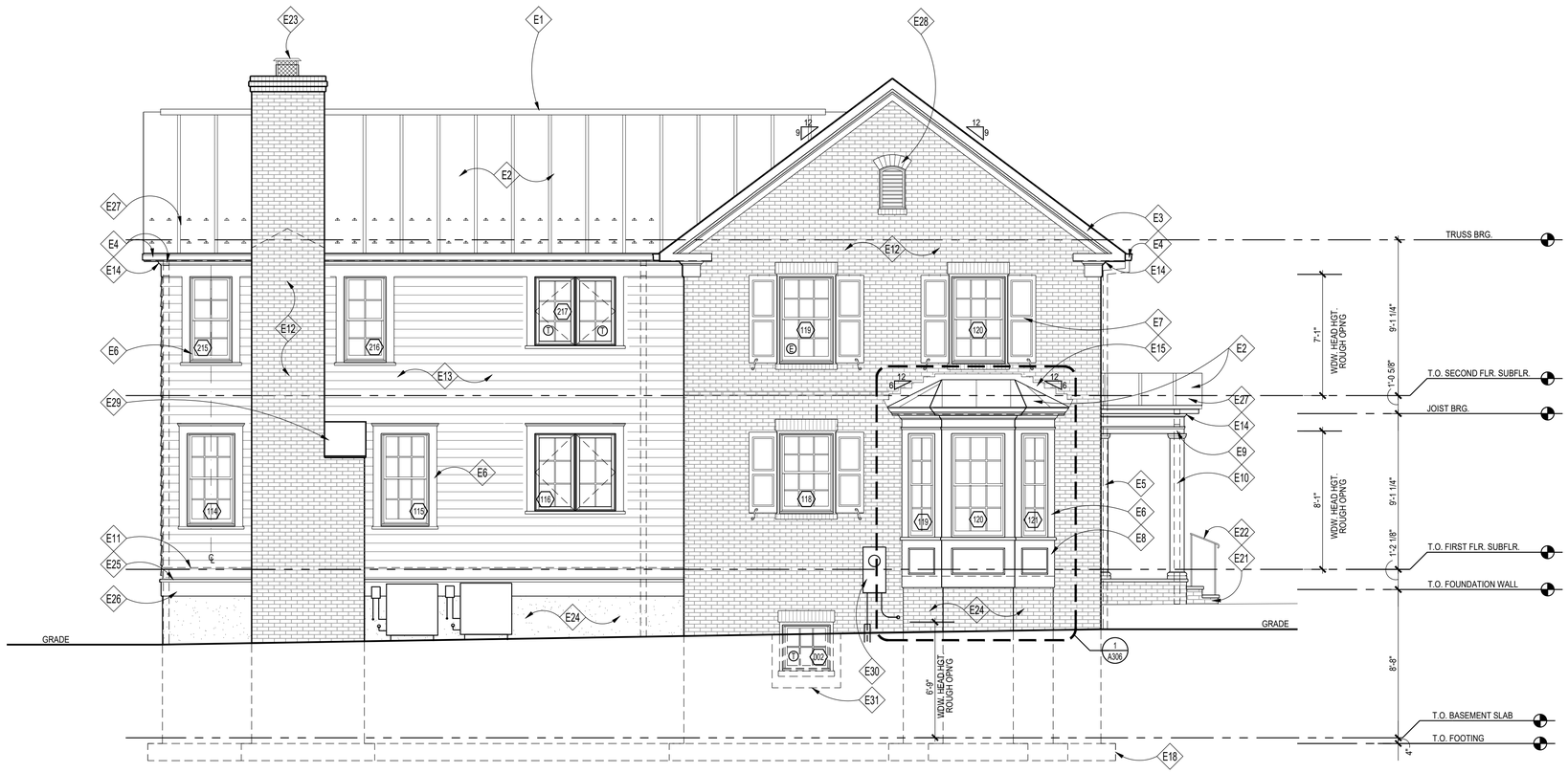

1 LEFT SIDE ELEVATION
SCALE: 1/4"=1'=0

ELEVATION NOTES

E1	RIDGE VENT W/ PTD. METAL CAP TO MATCH ROOFING, TYP.; REMOVE IF USING SPRAY FOAM INSULATION, SEE DETAIL '11/A304'
E2	PTD. STANDING SEAM METAL ROOF, T.B.S.
E3	PTD. 1X6 WOOD RAKE/FASCIA
E4	GUTTER (ON 1x6 PTD. WD FASCIA BD.) & 4" Ø DOWNSPOUT, T.B.S.
E5	PTD. SQ. WD PILASTER TO MATCH ADJACENT COLUMN
E6	PTD. 1X6 WOOD WINDOW HEAD & JAMB TRIM W/ PAINTED HISTORIC TRIM
E7	PTD. OPERABLE WD. SHUTTERS W/ HISTORIC HARDWARE, T.B.S., SEE DETAILS '4&5/A305'
E8	PTD. 1X WD. TRIM; CUT TO FIT
E9	PTD. 1X12 WOOD FRIEZE BD ALIGN W/ TOP OF WINDOWS/DOORS AND PORCH COLUMNS
E10	PTD 12" TAPERED ROUND WOOD COLUMN
E11	CONCEALED FLASHING & COUNTER FLASHING @ ALL VERTICAL TRANSITIONS, TYP. EXTEND MIN. 8" BEHIND SIDING. COLOR T.B.S.
E12	BRICK VENEER, TO BE SELECTED
E13	PTD. HARDIEPLANK LAP SIDING,W/ MITERED CORNERS 6" EXPOSURE
E14	PTD. WD. CROWN MLD. ON PTD. 1X BACKER
E15	PTD. ALUM BASE & COUNTER FLASHING @ VERTICAL TRANSITION; EXTEND MIN. 8" UP FACE OF CHIMNEY/WALL
E16	PTD. 8" SQ. WD COLUMN W/ NECK MOULD, TUSCAN CAP & BASE
E17	SLOPED BRICK ROWLOCK SILL
E18	DASHED LINE INDICATES FOOTING BELOW GRADE
E19	EGRESS WINDOW WELL W/ FLAGSTONE CAP OVER CONC. FOUNDATION WALL
E20	PTD. 10" SQ. WD COLUMN W/ NECK MOULD, TUSCAN CAP & BASE
E21	CONC. PORCH & STEPS TO GRADE W/ BRICK RISERS AND FLAGSTONE TREADS
E22	PTD. 34"H. MTL HANDRAIL PER IRC 2018
E23	BLACK GALVANIZED STEEL FLUE CHIMNEY CAP BY HOME SAVER (SINGLE FLUE) OR APPROVED EQUAL W/ FLAT SEAM METAL CAP, COLOR T.B.S.
E24	PARGED & PTD. CONC. FOUNDATION WALL WHERE EXPOSED
E25	PTD. SLOPED 1X WOOD DRIP CAP, SEE 13/A303 FOR DETAIL
E26	PTD. 5/4 x 10 WOOD TRIMBAND
E27	PAD-STYLE MTL. SNOW GUARDS SPACED IN TWO ROWS, 2 PER PANEL
E28	FYPON EBLV 18X30 ATTIC VENT W/ INSECT SCREEN BEHIND
E29	SLOPED STONE SHOULDER CAP
E30	ELEC METER, FIELD VERIFY FINAL LOCATION
E31	PREFABRICATED WINDOW WELL, PROVIDE GRAVEL BASE AND DRAIN TO SUMP OR DAYLIGHT

NOTE:

1. VERIFY ALL EXTERIOR RISER & TREAD DIMENSIONS IN FIELD
2. ALL EXTERIOR WOOD TRIM TO BE TREATED FOR PROTECTION AGAINST MOISTURE, ROT, FUNGAL ATTACK & INSECTS, WINDSOR-ONE+, LIFESPAN OR EQ.
3. Ⓣ = TEMPERED GLASS
   Ⓔ = EGRESS

GTM ARCHITECTS

7735 OLD GEORGETOWN ROAD
SUITE 700
BETHESDA, MD 20814
(240)333-2000
(240)333-2001 FAX
WWW.GTMARCHITECTS.COM

Seal

I certify that these documents were prepared or approved by me, and that I am a duly licensed architect under the laws of the State of Maryland, license number 8385, Expiration Date: 12-06-2022.

Consultant

Project

23 HIGH STREET LOT 2

23 HIGH STREET, BROOKEVILLE, MD 20833

Owner

Developer

PERMIT SET	4-11-2022
Issue Description	Date

GTM Project No.	18.0320
Checked By	GTM
Drawn By	LEO/NW
Scale	AS NOTED

Sheet Title

LEFT SIDE ELEVATION

Sheet No.

A203

COPYRIGHT, 2022 GTM ARCHITECTS, INC.

FILE NAME:

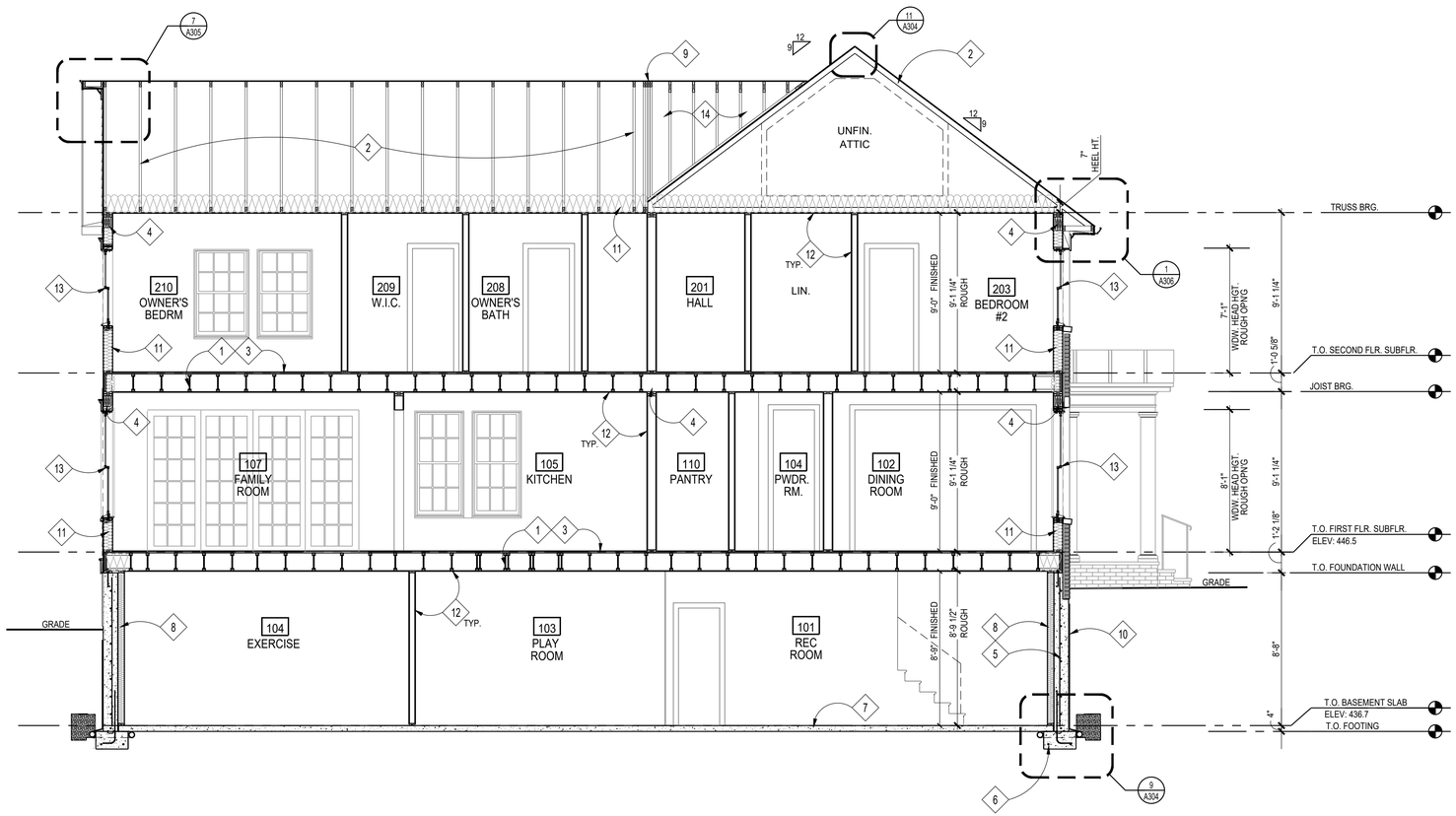

1 BUILDING SECTION @ STAIRS
SCALE: 1/4"=1'=0

CONSTRUCTION NOTES

1. FLOOR JOISTS; SEE FRAMING PLANS
2. ROOF TRUSSES BY TRUSS MANUFACTURER; SEE FRAMING PLANS
3. 3/4" T&G PLYWD. SUBFLOOR; GLUED & SCREWED
4. BEAM/ LINTEL/ HEADER; SEE FRAMING PLANS
5. CONCRETE FOUNDATION WALL; SEE FOUNDATION PLAN
6. FOOTING; SEE FOUNDATION PLAN
7. REINF. CONC. SLAB; SEE FOUNDATION PLAN
8. FUR OUT BASEMENT WALLS W/ 2x4's @ 16" O.C. & R-13 BATT INSULATION, TYP.
9. GIRDER TRUSS BY TRUSS MANUFACTURER; SEE FRAMING PLANS
10. WATERPROOFING AND DRAINAGE BD TO GRADE
11. INSULATION, SEE THERMAL ENVELOPE SHEET EC001
12. 1/2" GYP. BD
13. SCHEDULED WINDOW/DOOR
14. OVERBUILD, SEE FRAMING PLANS

GTM ARCHITECTS

7735 OLD GEORGETOWN ROAD
SUITE 700
BETHESDA, MD 20814
(240)333-2000
(240)333-2001 FAX
WWW.GTMARCHITECTS.COM

Seal

I certify that these documents were prepared or approved by me, and that I am a duly licensed architect under the laws of the State of Maryland, license number 8385, Expiration Date: 12-06-2022.

Consultant

Project

23 HIGH STREET LOT 2

23 HIGH STREET, BROOKEVILLE, MD 20833

Owner

Developer

PERMIT SET	4-11-2022
Issue Description	Date

GTM Project No.	18.0320
Checked By	GTM
Drawn By	LEO/NW
Scale	AS NOTED

Sheet Title

BUILDING SECTION

Sheet No.

A300

COPYRIGHT, 2022 GTM ARCHITECTS, INC.

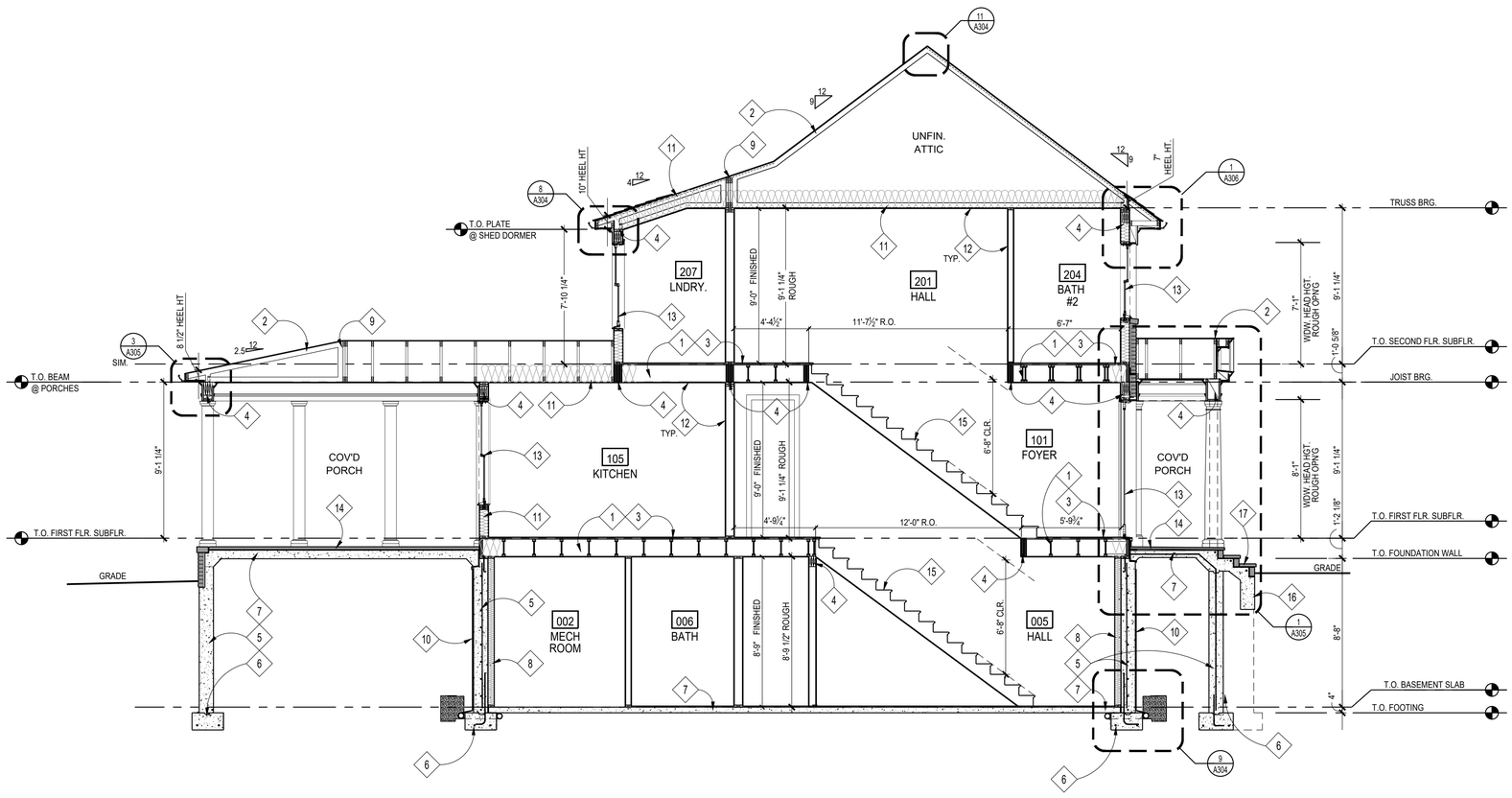

1 BUILDING SECTION
SCALE: 1/4"=1'=0

CONSTRUCTION NOTES

1. FLOOR JOISTS; SEE FRAMING PLANS
2. ROOF TRUSSES BY TRUSS MANUFACTURER; SEE FRAMING PLANS
3. 3/4" T&G PLYWD. SUBFLOOR; GLUED & SCREWED
4. BEAM/ LINTEL/ HEADER; SEE FRAMING PLANS
5. CONCRETE FOUNDATION WALL; SEE FOUNDATION PLAN
6. FOOTING; SEE FOUNDATION PLAN
7. REINF. CONC. SLAB; SEE FOUNDATION PLAN
8. FUR OUT BASEMENT WALLS W/ 2x4's @ 16" O.C. & R-13 BATT INSULATION, TYP.
9. GIRDER TRUSS BY TRUSS MANUFACTURER; SEE FRAMING PLANS
10. WATERPROOFING AND DRAINAGE BD TO GRADE
11. INSULATION, SEE THERMAL ENVELOPE SHEET EC001
12. 1/2" GYP. BD
13. SCHEDULED WINDOW/DOOR
14. FLAGSTONE; T.B.S, ON 1" SETTING BED ON STRUCTURAL CONC. SLAB, SEE STRUCTURAL DRAWINGS.
15. STAIRCASE & RAILING; TREADS & RISERS, MATCH H.W.F., T.B.S., SEE DETAILS 1, 6 & 18 /A304, FOLLOW IRC 2018, RAILING T.B.S.
16. GRADE BEAM SUPPORTED BY CONC. WING WALL, SEE FOUNDATION PLAN
17. STEPS W/ BRICK VENEER RISERS & FLAGSTONE TREADS TO GRADE, FIELD VERIFY RISE/RUN

GTM ARCHITECTS

7735 OLD GEORGETOWN ROAD
SUITE 700
BETHESDA, MD 20814
(240)333-2000
(240)333-2001 FAX
WWW.GTMARCHITECTS.COM

Seal

I certify that these documents were prepared or approved by me, and that I am a duly licensed architect under the laws of the State of Maryland, license number 8385, Expiration Date: 12-06-2022.

Consultant

Project
23 HIGH STREET LOT 2
23 HIGH STREET, BROOKEVILLE, MD 20833

Owner

Developer

Issue Description	Date
PERMIT SET	4-11-2022

GTM Project No.	18.0320
Checked By	GTM
Drawn By	LEO/NW
Scale	AS NOTED

Sheet Title
BUILDING SECTION

Sheet No.
A301

COPYRIGHT, 2022 GTM ARCHITECTS, INC.

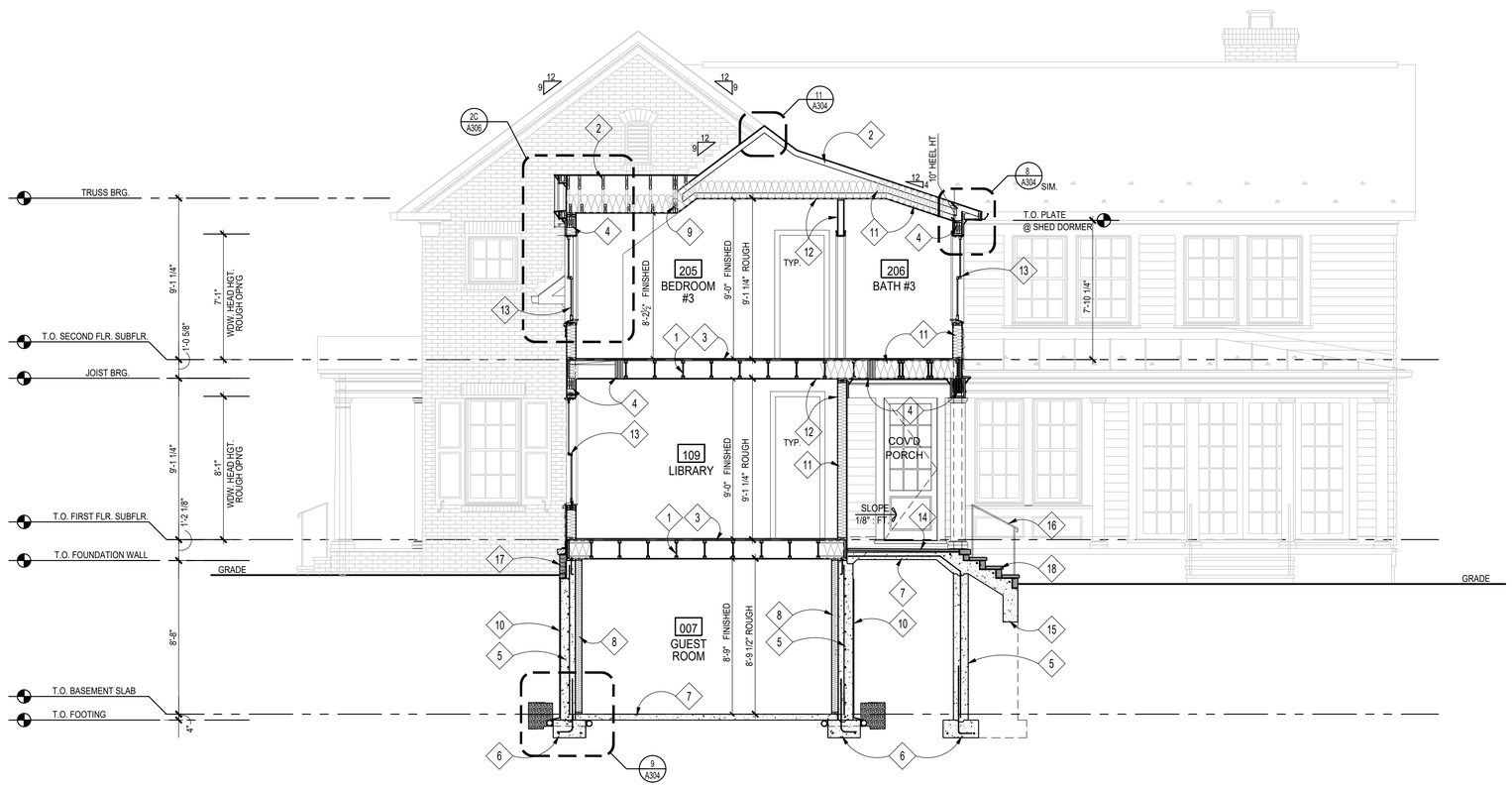

1 BUILDING SECTION
SCALE: 1/4"=1'=0

CONSTRUCTION NOTES

1. FLOOR JOISTS; SEE FRAMING PLANS
2. ROOF TRUSSES BY TRUSS MANUFACTURER; SEE FRAMING PLANS
3. 3/4" T&G PLYWD. SUBFLOOR; GLUED & SCREWED
4. BEAM/ LINTEL/ HEADER; SEE FRAMING PLANS
5. CONCRETE FOUNDATION WALL; SEE FOUNDATION PLAN
6. FOOTING; SEE FOUNDATION PLAN
7. REINF. CONC. SLAB; SEE FOUNDATION PLAN
8. FUR OUT BASEMENT WALLS W/ 2x4's @ 16" O.C. & R-13 BATT INSULATION, TYP.
9. GIRDER TRUSS BY TRUSS MANUFACTURER; SEE FRAMING PLANS
10. WATERPROOFING AND DRAINAGE BD TO GRADE
11. INSULATION, SEE THERMAL ENVELOPE SHEET EC001
12. 1/2" GYP. BD
13. SCHEDULED WINDOW/DOOR
14. FLAGSTONE; T.B.S, ON 1" SETTING BED ON STRUCTURAL CONC. SLAB, SEE STRUCTURAL DRAWINGS.
15. GRADE BEAM SUPPORTED BY CONC. WING WALL, SEE FOUNDATION PLAN
16. HANDRAIL @ 34" ABOVE NOSING, HANDRAIL HT & GRIPSIZE PER IRC 2018.
17. BRICK VENEER W/ SLOPED STONE WATERTABLE CAP, SEE ELEVATIONS
18. STEPS W/ BRICK VENEER RISERS & FLAGSTONE TREADS TO GRADE, FIELD VERIFY RISE/RUN

GTM ARCHITECTS

7735 OLD GEORGETOWN ROAD
SUITE 700
BETHESDA, MD 20814
(240)333-2000
(240)333-2001 FAX
WWW.GTMARCHITECTS.COM

Seal

I certify that these documents were prepared or approved by me, and that I am a duly licensed architect under the laws of the State of Maryland, license number 8385, Expiration Date: 12-06-2022.

Consultant

Project
23 HIGH STREET LOT 2
23 HIGH STREET, BROOKEVILLE, MD 20833

Owner

Developer

Issue Description	Date
PERMIT SET	4-11-2022

GTM Project No.	18.0320
Checked By	GTM
Drawn By	LEO/NW
Scale	AS NOTED

Sheet Title
BUILDING SECTION

Sheet No.
A302

COPYRIGHT, 2022 GTM ARCHITECTS, INC.

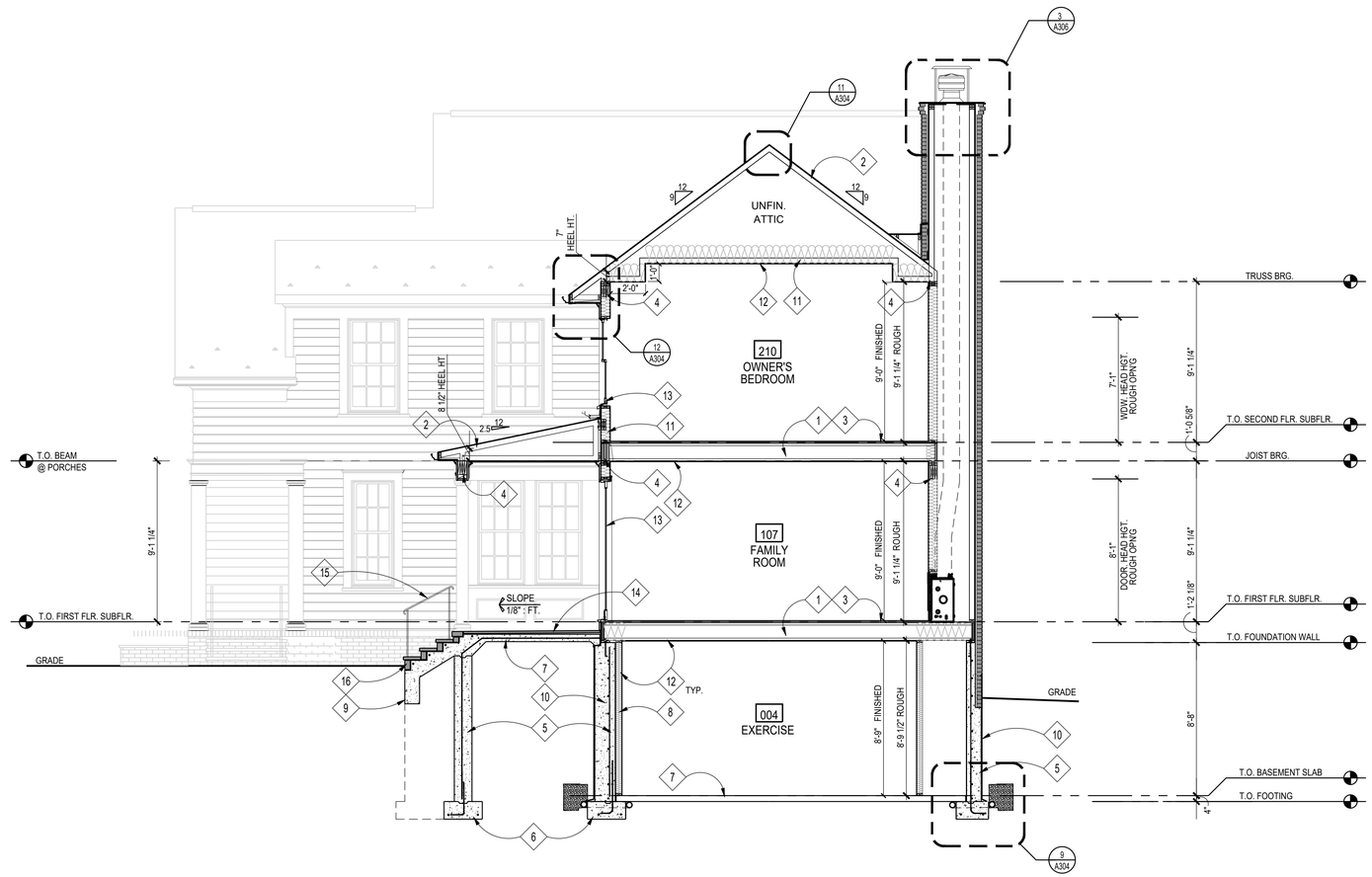

1 BUILDING SECTION
SCALE: 1/4"=1'=0

CONSTRUCTION NOTES

1. FLOOR JOISTS; SEE FRAMING PLANS
2. ROOF TRUSSES BY TRUSS MANUFACTURER; SEE FRAMING PLANS
3. 3/4" T&G PLYWD. SUBFLOOR; GLUED & SCREWED
4. BEAM/ LINTEL/ HEADER; SEE FRAMING PLANS
5. CONCRETE FOUNDATION WALL; SEE FOUNDATION PLAN
6. FOOTING; SEE FOUNDATION PLAN
7. REINF. CONC. SLAB; SEE FOUNDATION PLAN
8. FUR OUT BASEMENT WALLS W/ 2x4's @ 16" O.C. & R-13 BATT INSULATION, TYP.
9. GRADE BEAM SUPPORTED BY CONC. WING WALL, SEE FOUNDATION PLAN
10. WATERPROOFING AND DRAINAGE BD TO GRADE
11. INSULATION, SEE THERMAL ENVELOPE SHEET EC001
12. 1/2" GYP. BD
13. SCHEDULED WINDOW/DOOR
14. FLAGSTONE; T.B.S, ON 1" SETTING BED ON STRUCTURAL CONC. SLAB, SEE STRUCTURAL DRAWINGS.
15. HANDRAIL @ 34" ABOVE NOSING, HANDRAIL HT & GRIPSIZE PER IRC 2018.
16. STEPS W/ BRICK VENEER RISERS & FLAGSTONE TREADS TO GRADE, FIELD VERIFY RISE/RUN

GTM ARCHITECTS

7735 OLD GEORGETOWN ROAD
SUITE 700
BETHESDA, MD 20814
(240)333-2000
(240)333-2001 FAX
WWW.GTMARCHITECTS.COM

Seal

I certify that these documents were prepared or approved by me, and that I am a duly licensed architect under the laws of the State of Maryland, license number 8385, Expiration Date: 12-06-2022.

Consultant

Project

23 HIGH STREET LOT 2

23 HIGH STREET, BROOKEVILLE, MD 20833

Owner

Developer

PERMIT SET	4-11-2022
Issue Description	Date

GTM Project No.	18.0320
Checked By	GTM
Drawn By	LEO/NW
Scale	AS NOTED

Sheet Title

BUILDING SECTION

Sheet No.

A303

COPYRIGHT, 2022 GTM ARCHITECTS, INC.

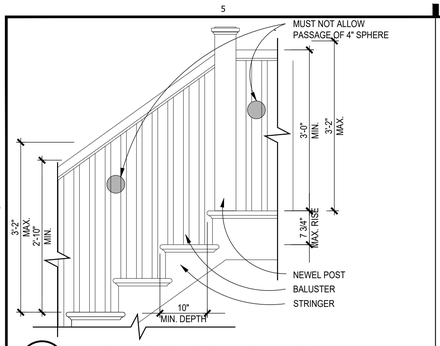

18 HANDRAIL STAIR CLEARANCES

SCALE: 3/4"=1'-0"

R08-045

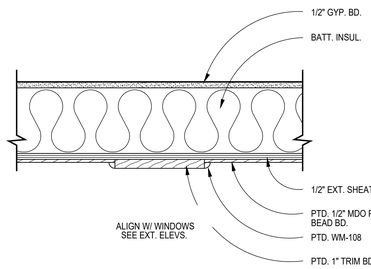

17 EXTERIOR PANEL DETAIL

SCALE: 1"=1'-0"

(1X1)

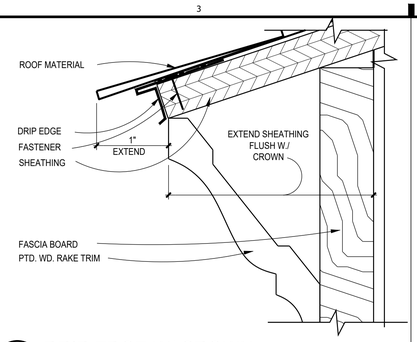

16 DRIP EDGE W/ CROWN

SCALE: 1" = 1"

(1X1)

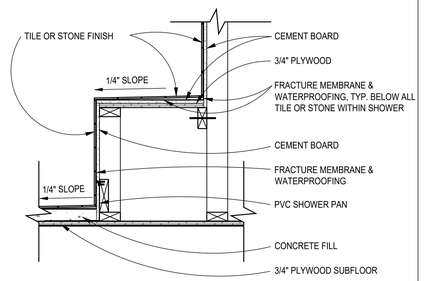

15 SECTION @ SHOWER BENCH

SCALE: 1"=1'-0"

R06-046

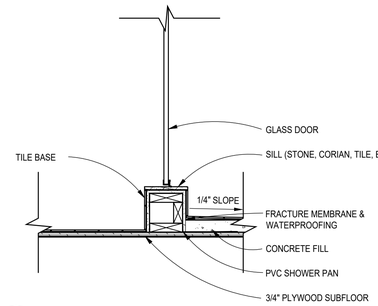

14 SECTION @ SHOWER CURB

SCALE: 1"=1'-0"

R06-047

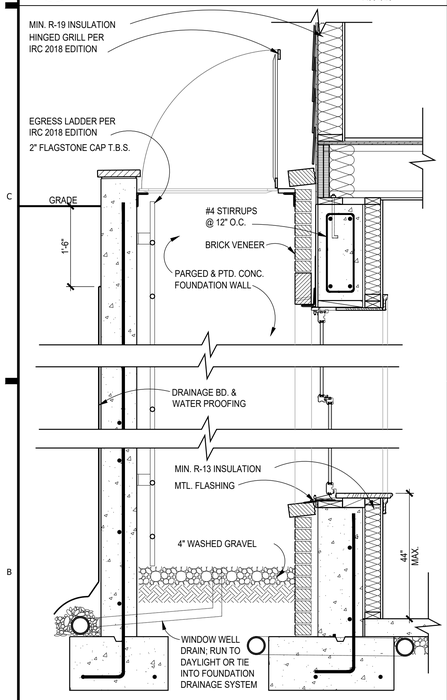

10 WINDOW WELL DETAIL, TYP.

SCALE: 3/4"=1'-0"

R03-021

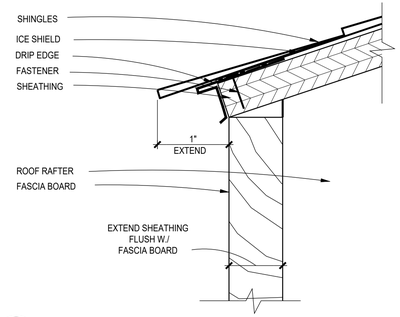

13 DRIP EDGE EAVE DETAIL

SCALE: 1"=1"

R04-051

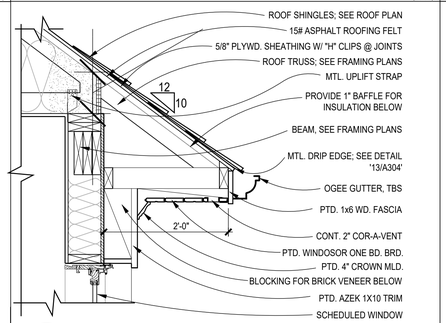

12 ROOF EAVE DETAIL

SCALE: 1 1/2" = 1'-0"

R08-016 (1X1)

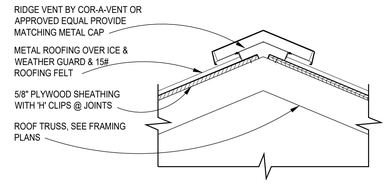

11 RIDGE DETAIL

SCALE: 1 1/2" = 1'-0"

??? (1X1)

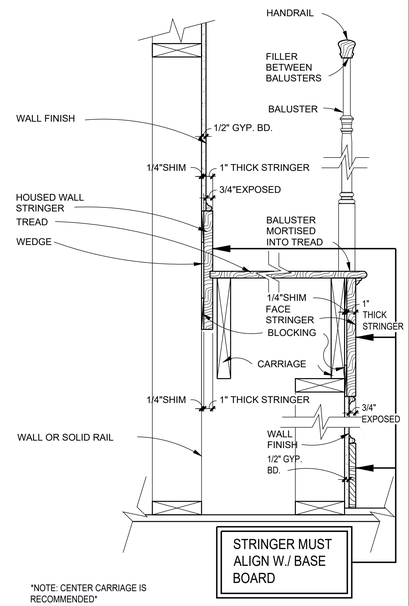

6 TYP. WOOD STAIR TRIM DETAIL

SCALE: 1 1/2"=1'-0"

R06-045

5 THRESHOLD DETAIL

SCALE: N.T.S.

R06-049 (1X1)

9 TYPICAL FOOTING DETAIL

SCALE: 1"=1'-0"

R01-035

8 REAR SHED DORMER EAVE DETAIL

SCALE: 1" = 1'-0"

R08-016 (1X1)

7 CORNER FRAMING DETAIL

SCALE: N.T.S.

R03-022 (1X1)

1 STAIR STRINGER

SCALE: 1"=1'-0"

R08-040

METAL PROTECTIVE EDGE TRIM BY SCHLUTER
CLEAR SILICONE SEALANT
ADHESIVE & TILE PREP @ 7/32" THICK
CARPET @ 5/16" THICK STANDARD
TACKLESS STRIPPING @ 1/4" THICK
40 OZ. UNDERLAYMENT PAD @ 3/8" THICK

NOTE: TILE CONTRACTOR RESPONSIBLE TO ENGINEER FLUSH CONDITIONS WITH ALL DOOR OPENINGS AND CARPET INSETS, AND TO SUBMIT ANY DETAIL OR RAMPED THRESHOLDS TO GTM FOR APPROVAL. TILE CONTRACTOR RESPONSIBLE TO PREP AND INSTALL ALL TILE MATERIALS, AND TO KEEP PREMISES CLEAN DURING AND AFTER INSTALLATION. TILE CONTRACTOR RESPONSIBLE TO GROUT AND SEAL FINISHED INSTALLATION, AND SUBMIT COLORS FOR GROUTING MATERIALS TO GTM FOR APPROVAL, AND PROVIDE SPEC SHEETS ON SEALANTS, ALONG WITH MAINTENANCE SPECIFICATIONS.

4 TILE-TO-CARPET TRANSITION

SCALE: 12"=1'-0"

S14-001 (1X1)

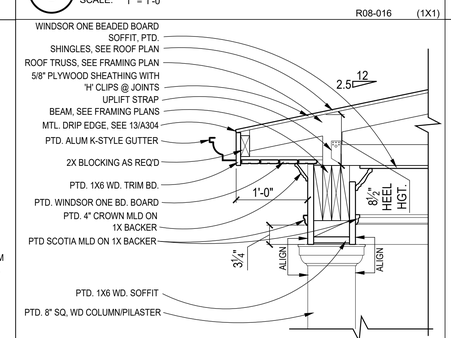

3 REAR PORCH EAVE DETAIL

SCALE: 1"=1'-0"

(1X1)

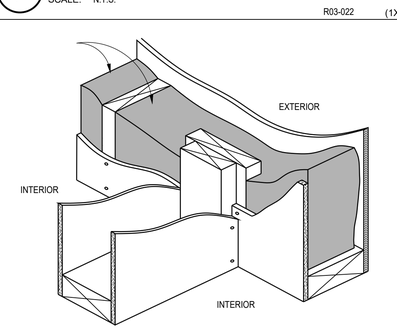

2 INTERSECTING WALL FRAMING

SCALE: N.T.S.

R03-023 (1X1)

GTM ARCHITECTS

7735 OLD GEORGETOWN ROAD
SUITE 700
BETHESDA, MD 20814
(240)333-2000
(240)333-2001 FAX
WWW.GTMARCHITECTS.COM

Seal

I certify that these documents were prepared or approved by me, and that I am a duly licensed architect under the laws of the State of Maryland License number 8085. Expiration Date: 01.06.2023

Consultant

Project

23 HIGH STREET LOT 2

23 HIGH STREET, BROOKEVILLE, MD 20833

Owner

Developer

PERMIT SET	4-11-2022

Issue Description	*Date*

GTM Project No.	18.0320
Checked By	GTM
Drawn By	LEO/NW
Scale	AS NOTED

Sheet Title

TYPICAL DETAILS

Sheet No.

A304

COPYRIGHT, 2022 GTM ARCHITECTS, INC.

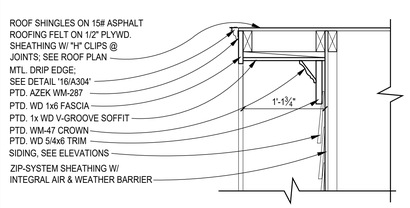

7 RAKE DETAIL
SCALE: 1" = 1'-0"
(1X1)

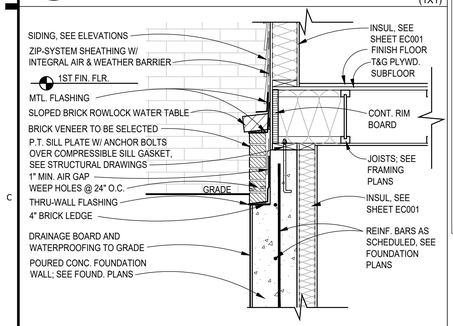

6 BRICK WATERTABLE DETAIL
SCALE: 1" = 1'-0"
(1X1)

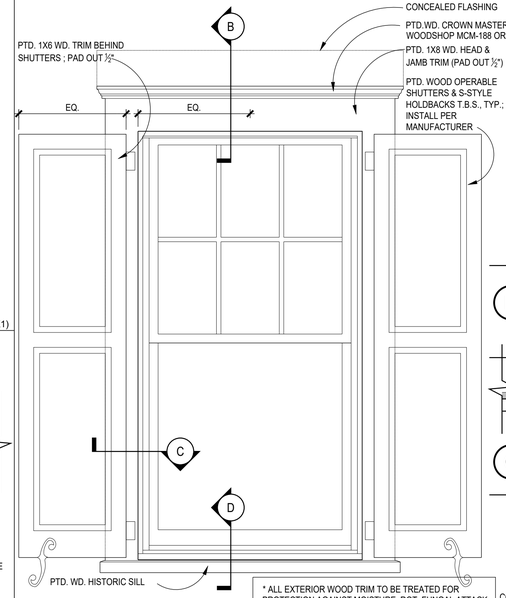

* ALL EXTERIOR WOOD TRIM TO BE TREATED FOR PROTECTION AGAINST MOISTURE, ROT, FUNGAL ATTACK & INSECTS. WINDSOR-ONE+, LIFESPAN OR EQ.

A ELEVATION
SCALE: 3/4"=1'-0"

5 TYP. EXT. WINDOW DETAILS @ SIDING
SCALE: AS NOTED

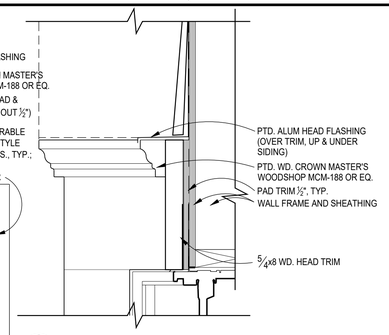

B HEAD DETAIL
SCALE: 3"=1'-0"

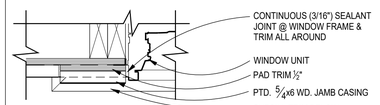

C JAMB DETAIL
SCALE: 3"=1'-0"

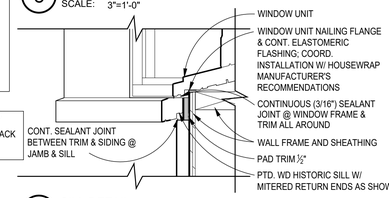

D SILL DETAIL
SCALE: 3"=1'-0"
(2X2)

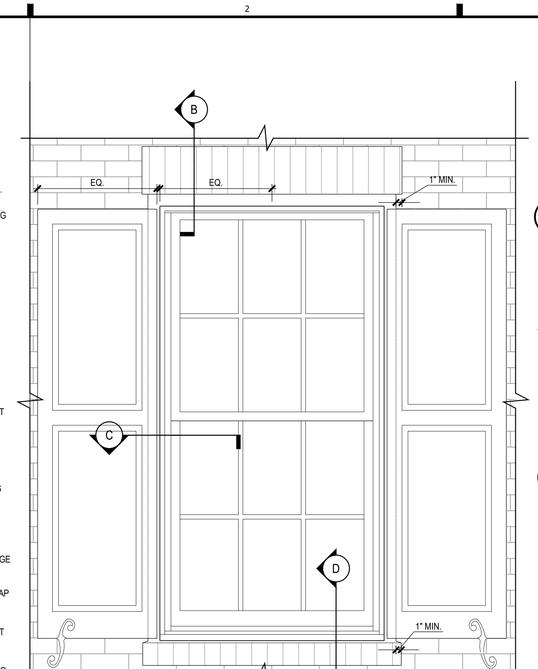

A ELEVATION
SCALE: 1"=1'-0"

4 TYP. EXT. WINDOW DETAILS @ BRICK
SCALE: AS NOTED
(2X2)

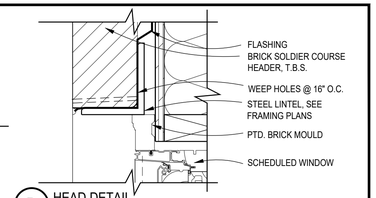

B HEAD DETAIL
SCALE: 3"=1'-0"

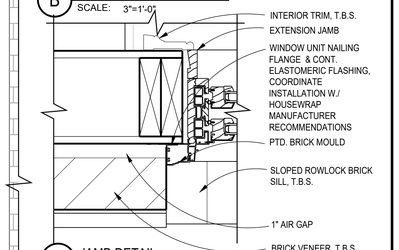

C JAMB DETAIL
SCALE: 3"=1'-0"

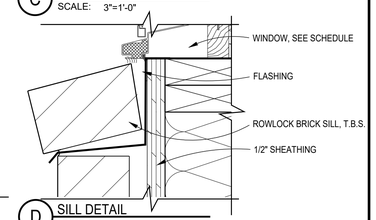

D SILL DETAIL
SCALE: 3"=1'-0"

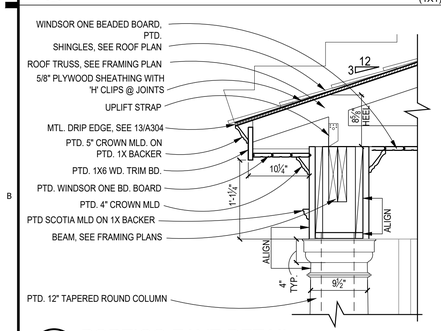

3 PORTICO EAVE DETAIL
SCALE: 1"=1'-0"
(1X1)

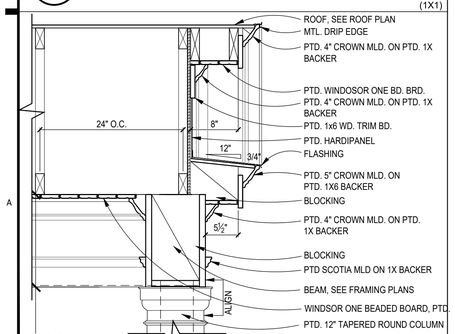

2 PORTICO RAKE DETAIL
SCALE: 1"=1'-0"
(1X1)

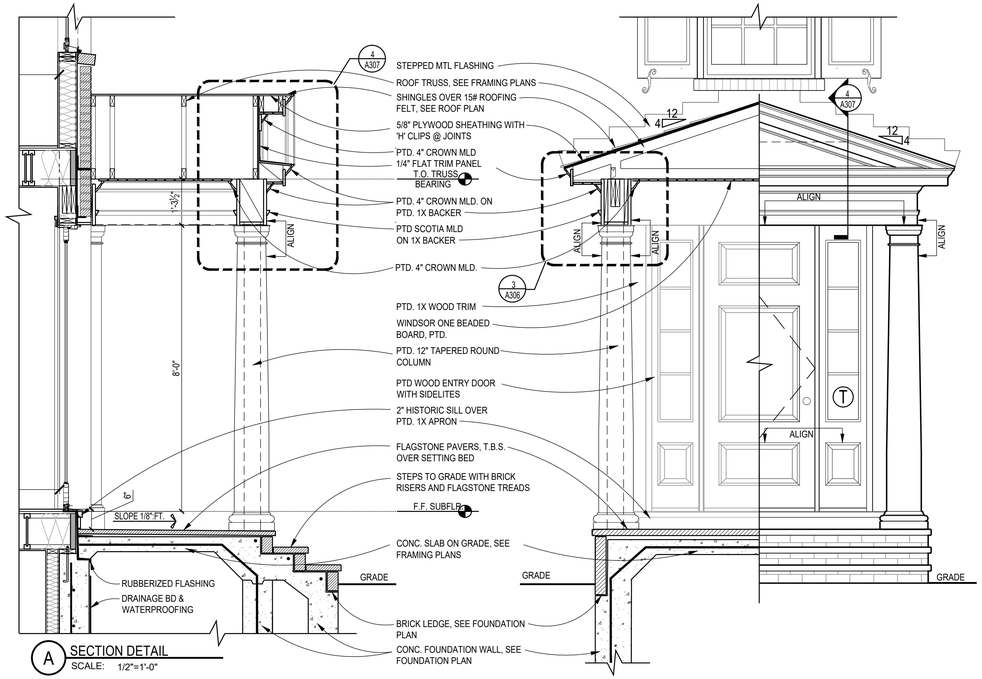

A SECTION DETAIL
SCALE: 1/2"=1'-0"

1 FRONT PORTICO DETAIL
SCALE: AS NOTED

B SECTION/ ELEVATION DETAIL
SCALE: 1/2"=1'-0"

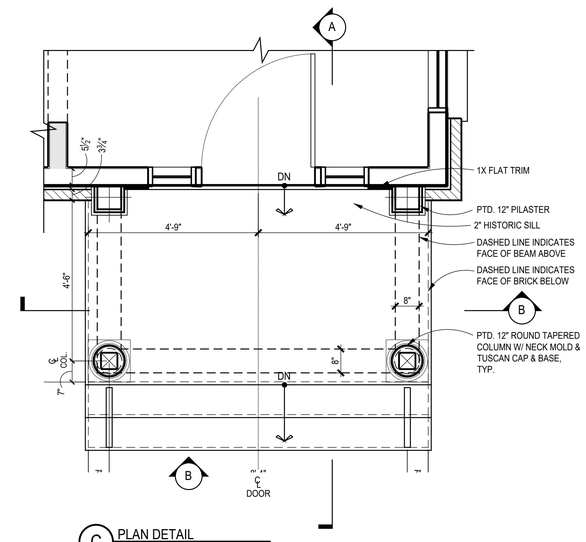

C PLAN DETAIL
SCALE: 1/2"=1'-0"

GTM ARCHITECTS

7735 OLD GEORGETOWN ROAD
SUITE 700
BETHESDA, MD 20814
(240)333-2000
(240)333-2001 FAX
WWW.GTMARCHITECTS.COM

Seal

Consultant

Project
23 HIGH STREET LOT 2
23 HIGH STREET, BROOKEVILLE, MD 20833

Owner

Developer

PERMIT SET	4-11-2022

Issue Description	Date

GTM Project No.	18.0320
Checked By	GTM
Drawn By	LEO/NW
Scale	AS NOTED

Sheet Title
DETAILS

Sheet No.
A305

COPYRIGHT, 2022 GTM ARCHITECTS, INC.

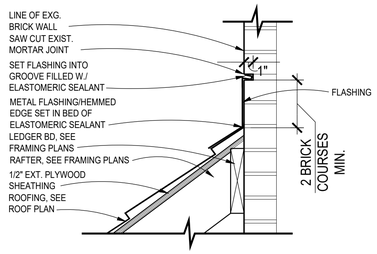

4 BASE & COUNTER-FLASHING DETAIL
SCALE: 1 1/2"=1'-0"

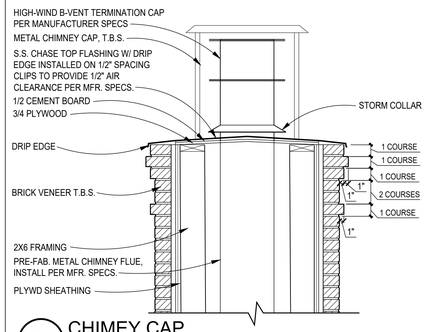

3 CHIMEY CAP
SCALE: 3/4"=1'-0"

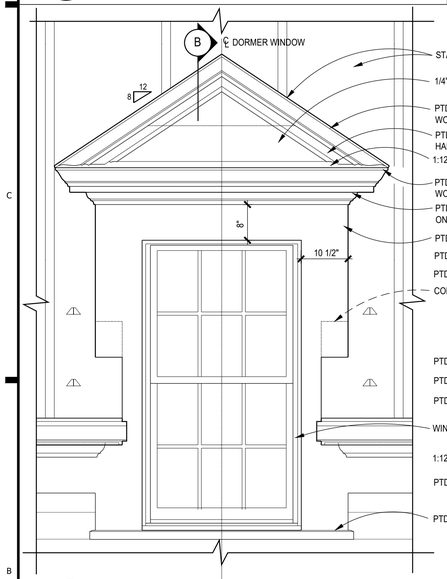

A FRONT ELEVATION
SCALE: 3/4"=1'-0"

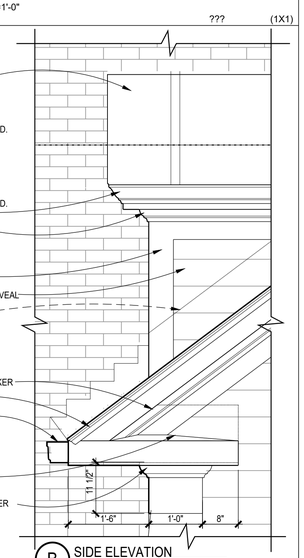

B SIDE ELEVATION
SCALE: 3/4"=1'-0"

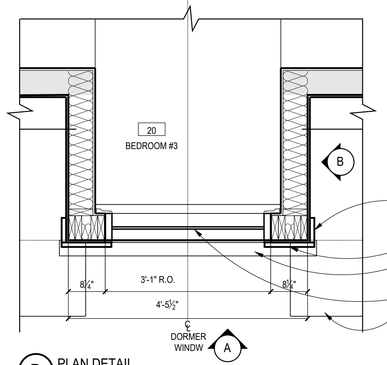

D PLAN DETAIL
SCALE: 3/4"=1'-0"

* ALL EXTERIOR WOOD TRIM TO BE TREATED FOR PROTECTION AGAINST MOISTURE, ROT, FUNGAL ATTACK & INSECTS, WINDSOR-ONE*, LIFESPAN OR EQ.

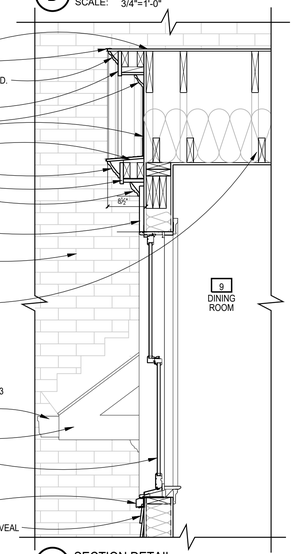

2 TYP. DORMER DETAILS
SCALE: AS NOTED

C SECTION DETAIL
SCALE: 3/4"=1'-0"

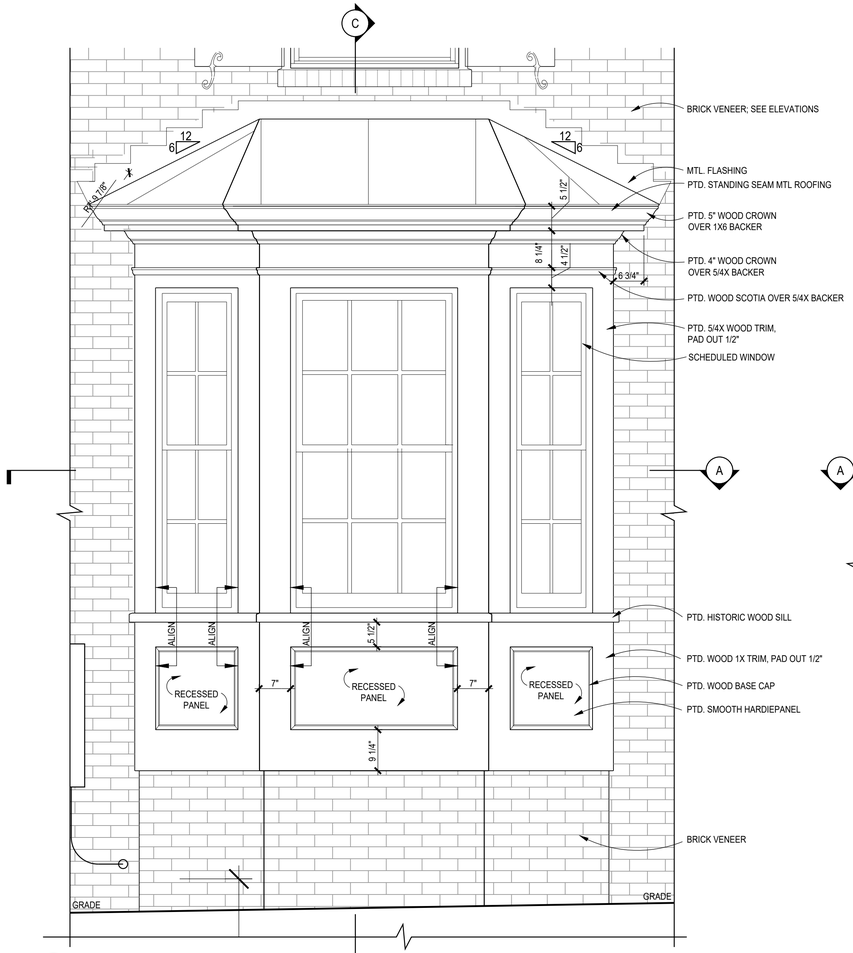

B FRONT ELEVATION
SCALE: 3/4"=1'-0"

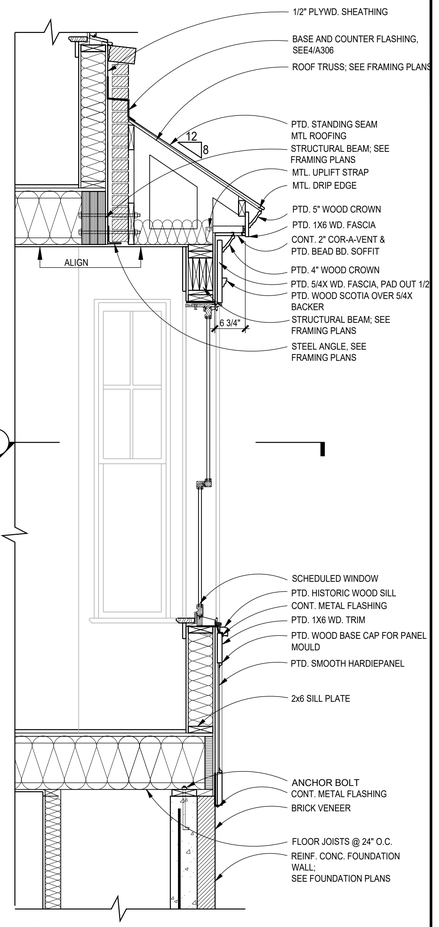

C BAY WINDOW SECTION
SCALE: 3/4"=1'-0"

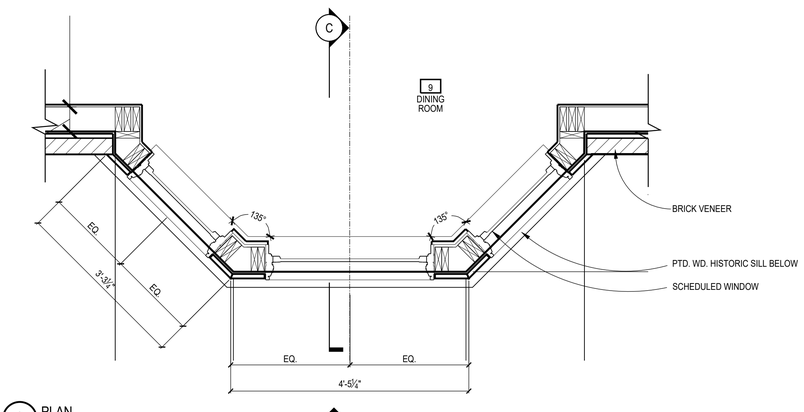

A PLAN
SCALE: 3/4"=1'-0"

1 BAY DETAILS
SCALE: AS NOTED

(3X4)

GTM ARCHITECTS

7735 OLD GEORGETOWN ROAD
SUITE 700
BETHESDA, MD 20814
(240)333-2000
(240)333-2001 FAX
WWW.GTMARCHITECTS.COM

Seal

I certify that these documents were prepared or approved by me, and that I am a duly licensed architect under the laws of the State of Maryland License number 8888, Expiration Date: 01.06.2023

Consultant

Project

23 HIGH STREET LOT 2

23 HIGH STREET, BROOKEVILLE, MD 20833

Owner

Developer

PERMIT SET	4-11-2022

Issue Description	*Date*

GTM Project No.	18.0320
Checked By	GTM
Drawn By	LEO/NW
Scale	AS NOTED

Sheet Title

DETAILS

Sheet No.

A306

COPYRIGHT, 2022 GTM ARCHITECTS, INC.

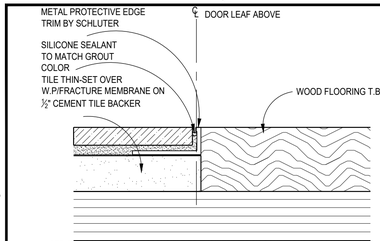

NOTE: TILE CONTRACTOR RESPONSIBLE TO ENGINEER FLUSH CONDITIONS WITH ALL DR. OPENINGS & WOOD/CARPET INSETS, & TO SUBMIT ANY DETAIL OR RAMPED THRESHOLDS TO GTM FOR APPROVAL. TILE CONTRACTOR RESPONSIBLE TO PREP & INSTALL ALL TILE MATERIALS, & TO KEEP PREMISES CLEAN DURING & AFTER INSTALLATION. TILE CONTRACTOR RESPONSIBLE TO GROUT & SEAL FINISHED INSTALLATION, & SUBMIT COLORS FOR GROUTING MATERIALS TO GTM FOR APPROVAL, & PROVIDE SPEC SHEETS ON SEALANTS, ALONG WITH MAINTENANCE SPECS. FOR FLOOR AREAS W/ RADIUS, USE EDGE TRIM W/ RADIUS PERFORATIONS, SCHLUTER "SCHIENE" OR SIM.

20 TILE-TO-WOOD TRANSITION

SCALE: 12"=1'-0"

R06-050 (1X1)

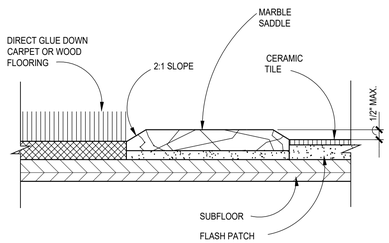

19 THRESHOLD DETAIL

SCALE: N.T.S.

S14-003 (1X1)

18 NOT USED

SCALE: 1 1/2"=1'-0"

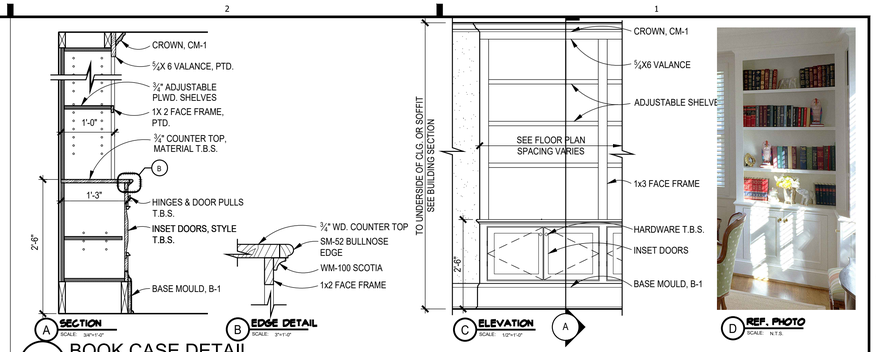

17 BOOK CASE DETAIL

SCALE: AS NOTED

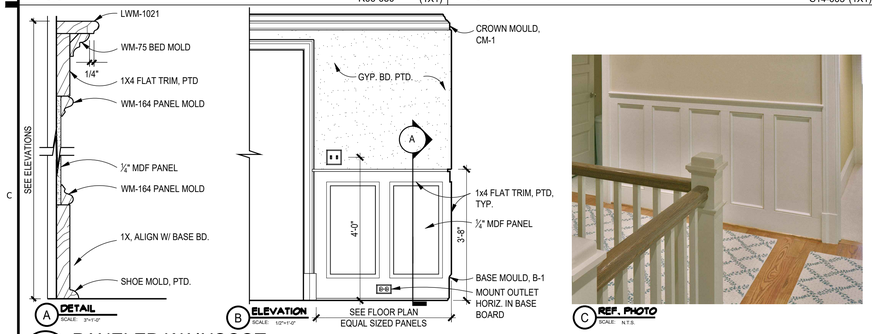

15 PANELED WAINSCOT

SCALE: AS NOTED

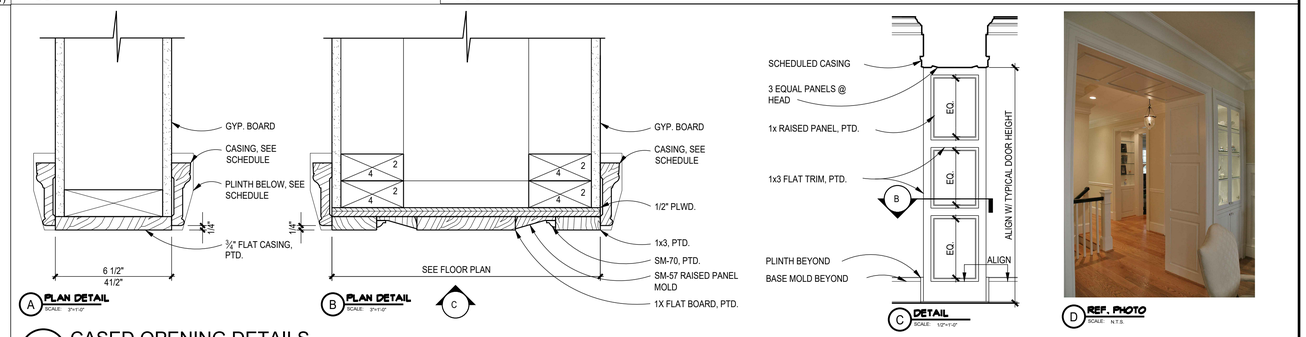

13 CASED OPENING DETAILS

SCALE: AS NOTED

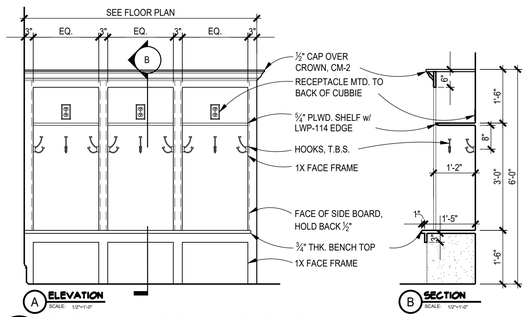

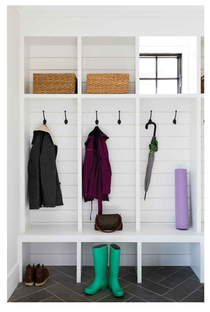

REF. PHOTO

10 TYPICAL MUDROOM CUBBIES

SCALE: 1/2"=1'-0"

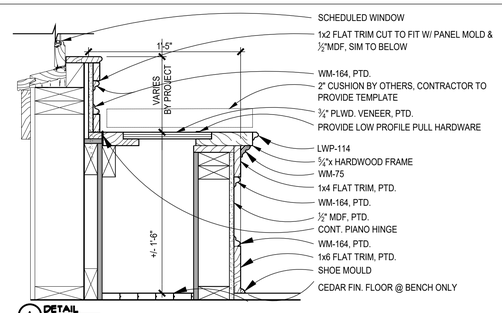

REF. PHOTO

8 BENCH SEAT DETAIL

SCALE: AS NOTED

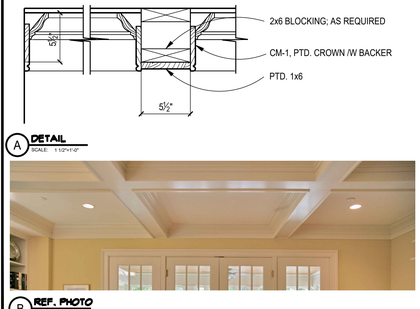

REF. PHOTO

5 COFFERED CEILING DETAIL

SCALE: 1 1/2"=1'-0"

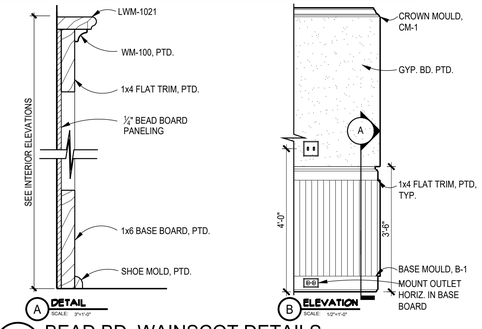

4 BEAD BD. WAINSCOT DETAILS

SCALE: AS NOTED

REF. PHOTO

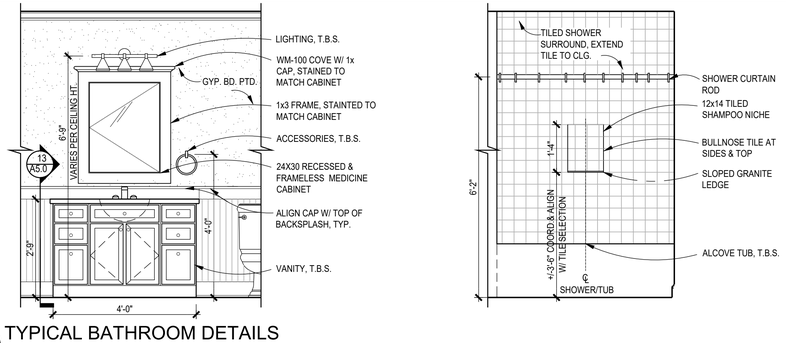

2 TYPICAL BATHROOM DETAILS

SCALE: 1/2"=1'-0"

FILE NAME:

GTM ARCHITECTS

7735 OLD GEORGETOWN ROAD
SUITE 700
BETHESDA, MD 20814
(240)333-2000
(240)333-2001 FAX
WWW.GTMARCHITECTS.COM

Seal

I certify that these documents were prepared or approved by me, and that I am a duly licensed architect under the laws of the State of Maryland License number 8085. Expiration Date: 06-06-2024

Consultant

Project

23 HIGH STREET LOT 2

23 HIGH STREET, BROOKEVILLE, MD 20833

Owner

Developer

Issue Description	Date
PERMIT SET	4-11-2022

GTM Project No.	18.0320
Checked By	GTM
Drawn By	LEO/NW
Scale	AS NOTED

Sheet Title

DETAILS

Sheet No.

A307

COPYRIGHT, 2022 GTM ARCHITECTS, INC.

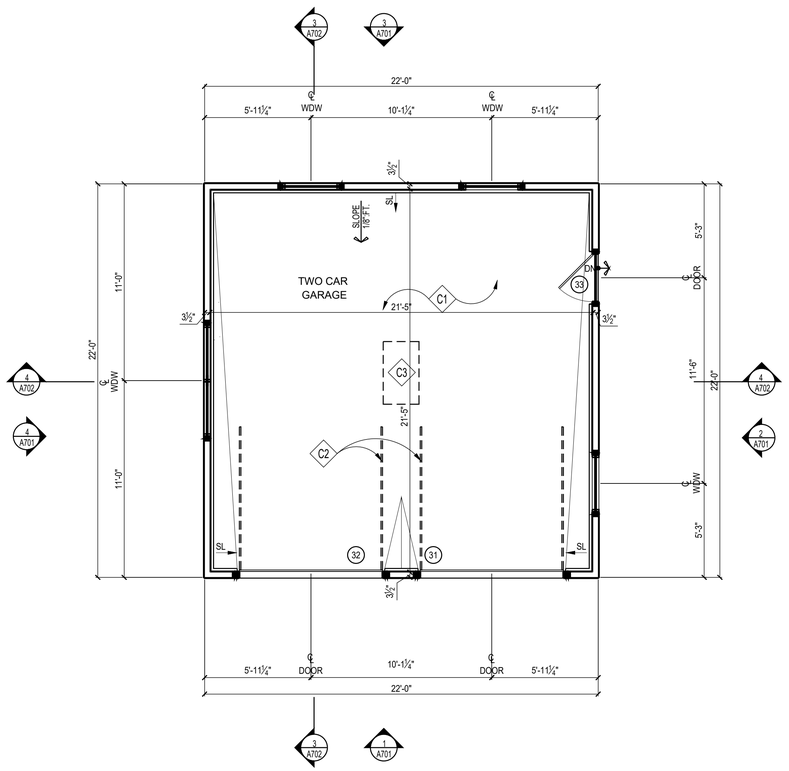

1 GARAGE PLAN
SCALE: 1/4"=1'-0"

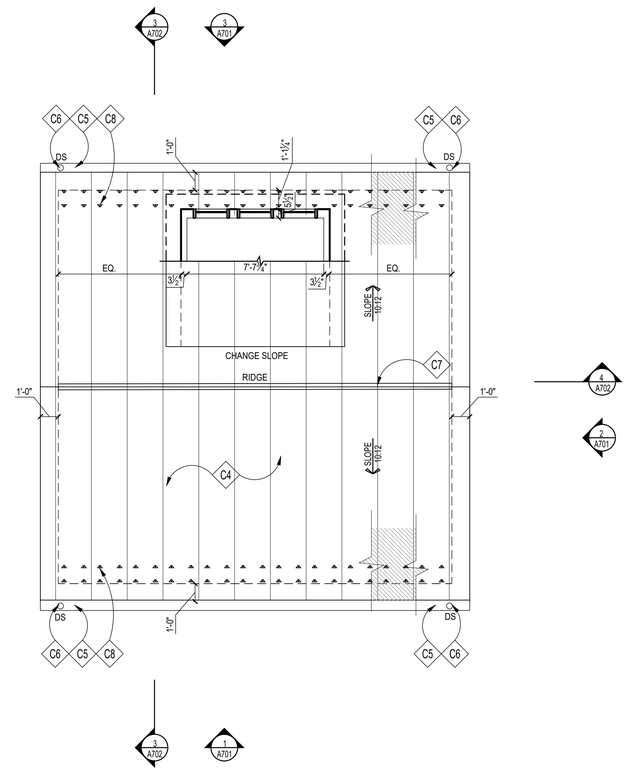

2 ROOF PLAN
SCALE: 1/4"=1'-0"

CONSTRUCTION NOTES

- C1 REINF. CONC. SLAB; SEE FOUNDATION PLAN
- C2 GARAGE DOOR TRACKS ABOVE
- C3 ATTIC ACCESS PANEL W/ PULL DOWN STAIR
- C4 STANDING SEAM METAL ROOF, T.B.S., MATCH MAIN HOUSE
- C5 GUTTER TO MATCH MAIN HOUSE
- C6 DOWNSPOUT TO MATCH MAIN HOUSE; SEE CIVIL DRAINAGE PLAN FOR ADDITIONAL INFO
- C7 RIDGE/HIP VENTS BY COR-A-VENT OR APPROVED EQUAL
- C8 PAD-STYLE MTL. SNOW GUARDS SPACED IN TWO ROWS, 2 PER PANEL INSTALL PER MANUF. SPECS

ROOFING NOTES

1. MEMBRANE ROOF SHALL BE 60 MIL, WHITE PVC, ASTM D 4434, TYPE III, FABRIC REINFORCED. THE MEMBRANE SHALL BE ADHERED TO MECHANICALLY FASTENED, POLYISOCYANURATE BOARD INSULATION ASTM C 1289, FELT OR GLASS-FIBER MAT FACER ON BOTH MAJOR SURFACES. TAPERED INSULATION SHALL BE FACTORY-MADE TO A MINIMUM SLOPE OF 1/4" PER FOOT. INSULATION SHALL BE INSTALLED IN TWO LAYERS WITH JOINTS STAGGERED.
2. PROVIDE FLASHING FOR MIN. 8" EACH SIDE OF ALL VALLEYS & PITCH CHANGES

WALL TYPES

TYPICAL EXTERIOR WALL: 2x4 WOOD STUDS 16" O.C. W/ VAPOR BARRIER, 1/2" OSB SHEATHING, TYVEK STUCCO WRAP, & PTD. SIDING TO MATCH MAIN HOUSE; SEE ELEVATIONS.

GTM ARCHITECTS

7735 OLD GEORGETOWN ROAD
SUITE 700
BETHESDA, MD 20814
(240)333-2000
(240)333-2001 FAX
WWW.GTMARCHITECTS.COM

Seal

I certify that these documents were prepared or approved by me, and that I am a duly licensed architect under the laws of the State of Maryland. License number 8385, Expiration Date: 12-06-2022.

Consultant

Project
23 HIGH STREET LOT 2
23 HIGH STREET, BROOKEVILLE, MD 20833

Owner

Developer

Issue Description	Date
PERMIT SET	4-11-2022

GTM Project No.	18.0320
Checked By	GTM
Drawn By	LEO/NW
Scale	AS NOTED

Sheet Title
GARAGE FLOOR PLANS

Sheet No.
A700

COPYRIGHT, 2022 GTM ARCHITECTS, INC.

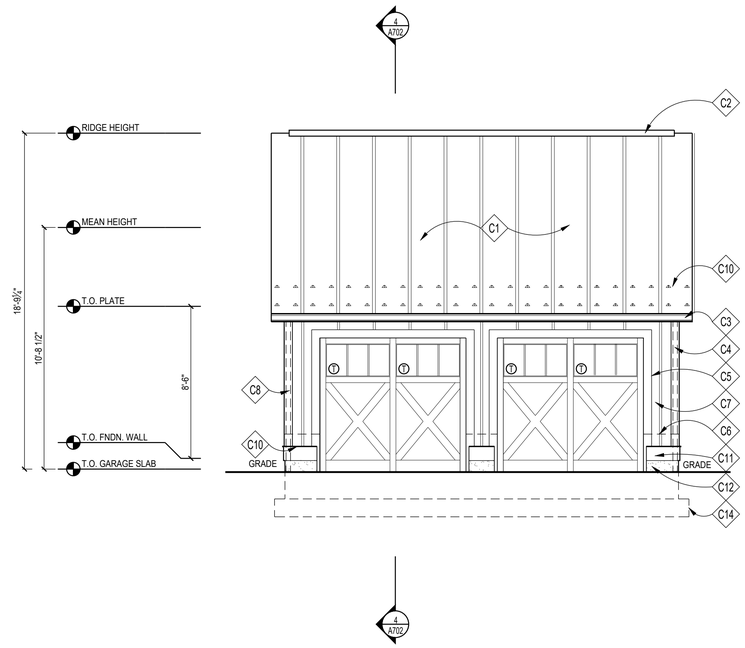

1 FRONT ELEVATION
SCALE: 1/4"=1'-0"

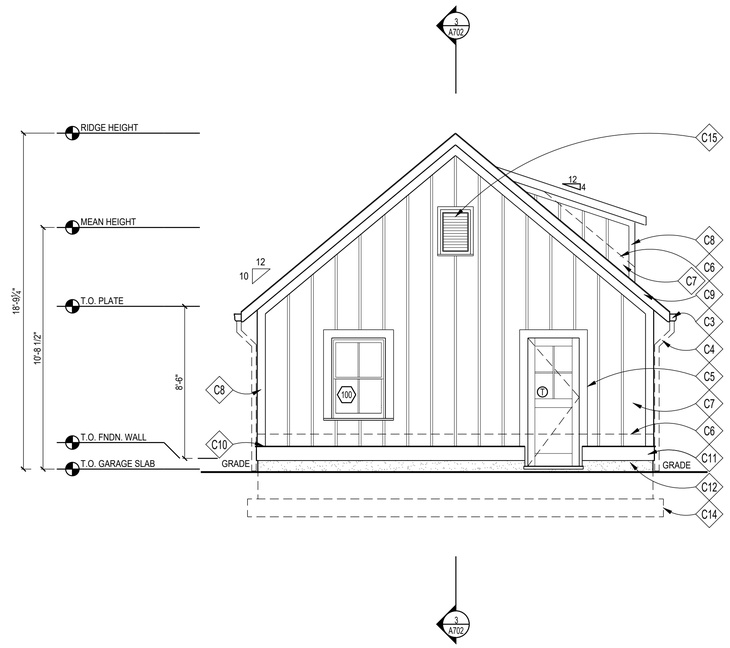

2 RIGHT SIDE ELEVATION
SCALE: 1/4"=1'-0"

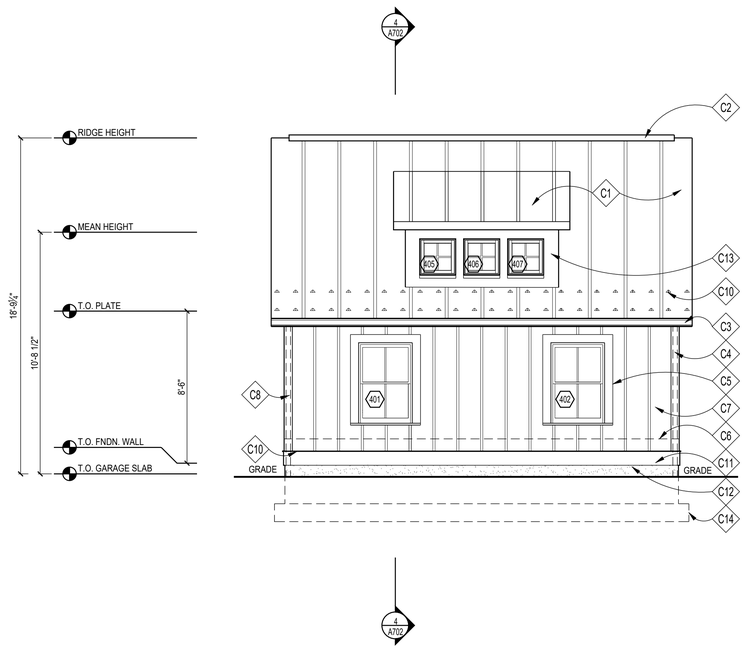

3 REAR ELEVATION
SCALE: 1/4"=1'-0"

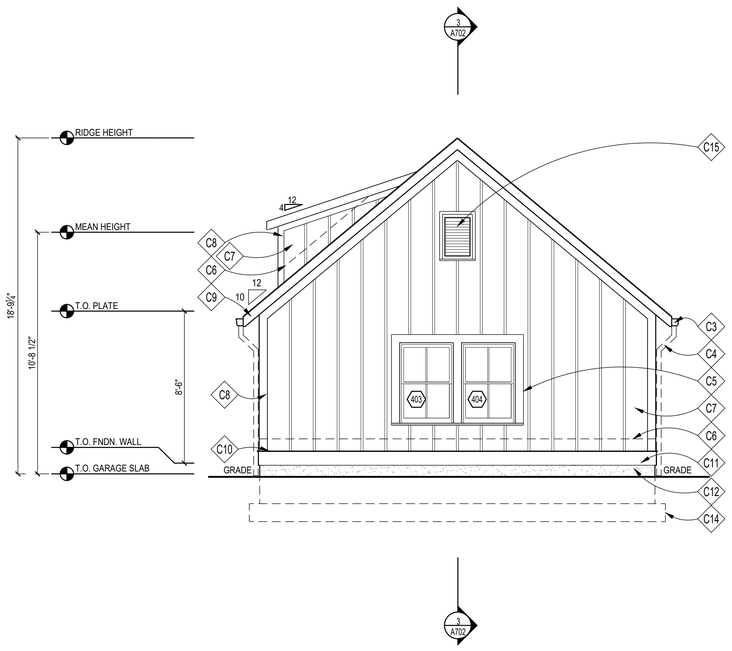

4 LEFT SIDE ELEVATION
SCALE: 1/4"=1'-0"

CONSTRUCTION NOTES

C1	STANDING SEAM METAL ROOF, T.B.S.
C2	RIDGE/HIP VENTS BY COR-A-VENT OR APPROVED EQUAL
C3	OGEE GUTTER (ON 1x6 PTD. FASCIA BD.)
C4	DOWNSPOUT TO MATCH MAIN HOUSE; SEE CIVIL DRAINAGE PLAN FOR ADDITIONAL INFO
C5	PTD. 1X6 WOOD HEAD & JAMB TRIM W/ HISTORIC SILL, TYP.
C6	CONCEALED FLASHING & COUNTER FLASHING @ ALL VERTICAL TRANSITIONS, TYP. EXTEND MIN. 8" BEHIND SIDING. COLOR T.B.S.
C7	PTD. WD. BOARD & BATTEN SIDING
C8	PTD. 1x6 WD. CORNERBOARD
C9	PTD. 1X6 WOOD RAKE/FASCIA
C10	POD-STYLE MTL. SNOW GUARDS SPACE @ 24" O.C., STAGGERED W/ ROW BELOW
C11	PTD. 1x 10 WOOD TRIMBAND W/ SLOPED 1X WOOD DRIP CAP
C12	PARGED & PTD. CONC. FOUNDATION WALL WHERE EXPOSED
C13	PTD. 1X WD. TRIM; CUT TO FIT @ FRONT OF DORMERS
C14	LINE OF FOOTING BELOW
C15	FYPON EBLV 18X30 ATTIC VENT W/ INSECT SCREEN BEHIND

GTM ARCHITECTS

7735 OLD GEORGETOWN ROAD
SUITE 700
BETHESDA, MD 20814
(240)333-2000
(240)333-2001 FAX
WWW.GTMARCHITECTS.COM

Seal

I certify that these documents were prepared or approved by me, and that I am a duly licensed architect under the laws of the State of Maryland. License Number: 33505, Expiration Date: 12-06-2022

Consultant

Project

23 HIGH STREET LOT 2

23 HIGH STREET, BROOKEVILLE, MD 20833

Owner

Developer

PERMIT SET	4-11-2022

Issue Description	*Date*

GTM Project No.	18.0320
Checked By	GTM
Drawn By	LEO/NW
Scale	AS NOTED

Sheet Title

GARAGE ELEVATIONS

Sheet No.

A701

COPYRIGHT, 2022 GTM ARCHITECTS, INC.

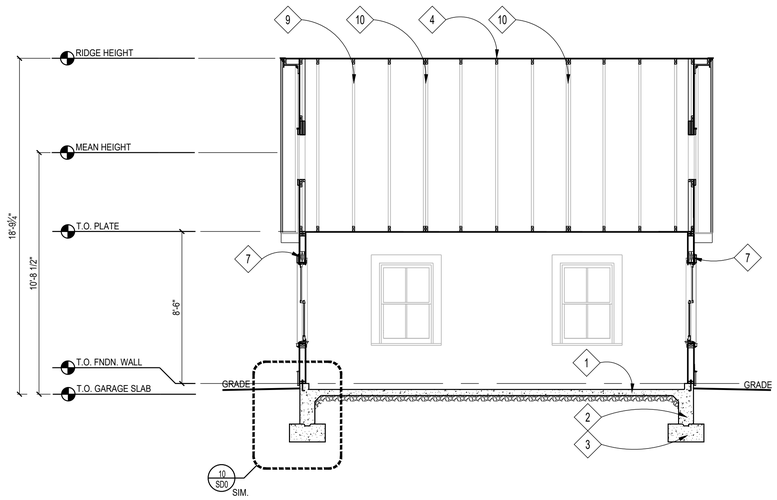

3 BUILDING SECTION
SCALE: 1/4"=1'-0"

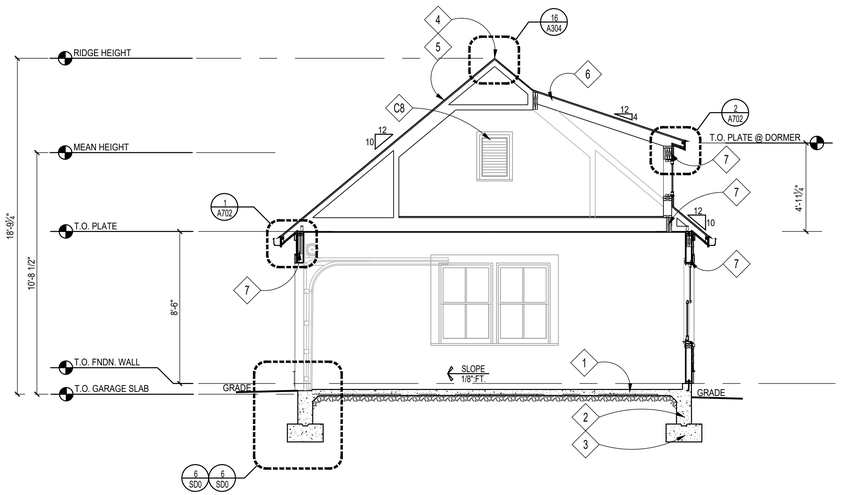

4 BUILDING SECTION
SCALE: 1/4"=1'-0"

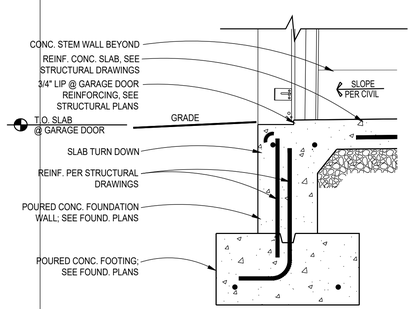

7 TYP. GARAGE DOOR DETAIL
SCALE: 1"=1'-0"
(1X2)

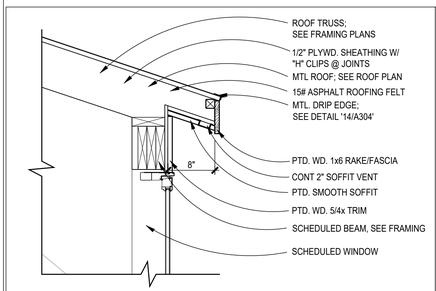

2 DORMER SOFFIT DETAIL
SCALE: 1" = 1'-0"
(1X1)

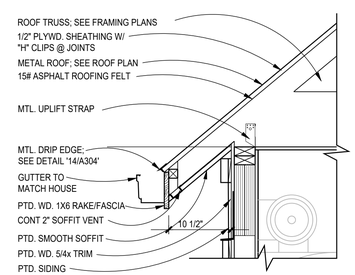

1 GARAGE SOFFIT DETAIL
SCALE: 1" = 1'-0"
(1X1)

CONSTRUCTION NOTES

1. REINF. CONC. SLAB; SEE FOUNDATION PLAN
2. CONCRETE FOUNDATION WALL; SEE FOUNDATION PLAN
3. FOOTING; SEE FOUNDATION PLAN
4. RIDGE/HIP VENTS BY COR-A-VENT OR APPROVED EQUAL
5. SEE NOTE #1 UNDER GENERAL ROOFING NOTES, TYP.
6. 2x RAFTERS/CEILING JOISTS, SEE FRAMING PLAN
7. BEAM, SEE FRAMING PLAN
8. FYPON EBLV 18X30 ATTIC VENT W/ INSECT SCREEN BEHIND
C9. ROOF TRUSSES BY TRUSS MANUFACTURER; SEE FRAMING PLANS
C10. GIRDER TRUSS BY TRUSS MANUFACTURER; SEE FRAMING PLANS

GTM ARCHITECTS

7735 OLD GEORGETOWN ROAD
SUITE 700
BETHESDA, MD 20814
(240)333-2000
(240)333-2001 FAX
WWW.GTMARCHITECTS.COM

Seal

I certify that these documents were prepared or approved by me, and that I am a duly licensed architect under the laws of the State of Maryland, License number 8385, Expiration Date: 12-06-2022.

Consultant

Project
23 HIGH STREET LOT 2
23 HIGH STREET, BROOKEVILLE, MD 20833

Owner

Developer

Issue Description	Date
PERMIT SET	4-11-2022

GTM Project No.	18.0320
Checked By	GTM
Drawn By	LEO/NW
Scale	AS NOTED

Sheet Title
GARAGE SECTIONS & DETAILS

Sheet No.
A702

COPYRIGHT, 2022 GTM ARCHITECTS, INC.

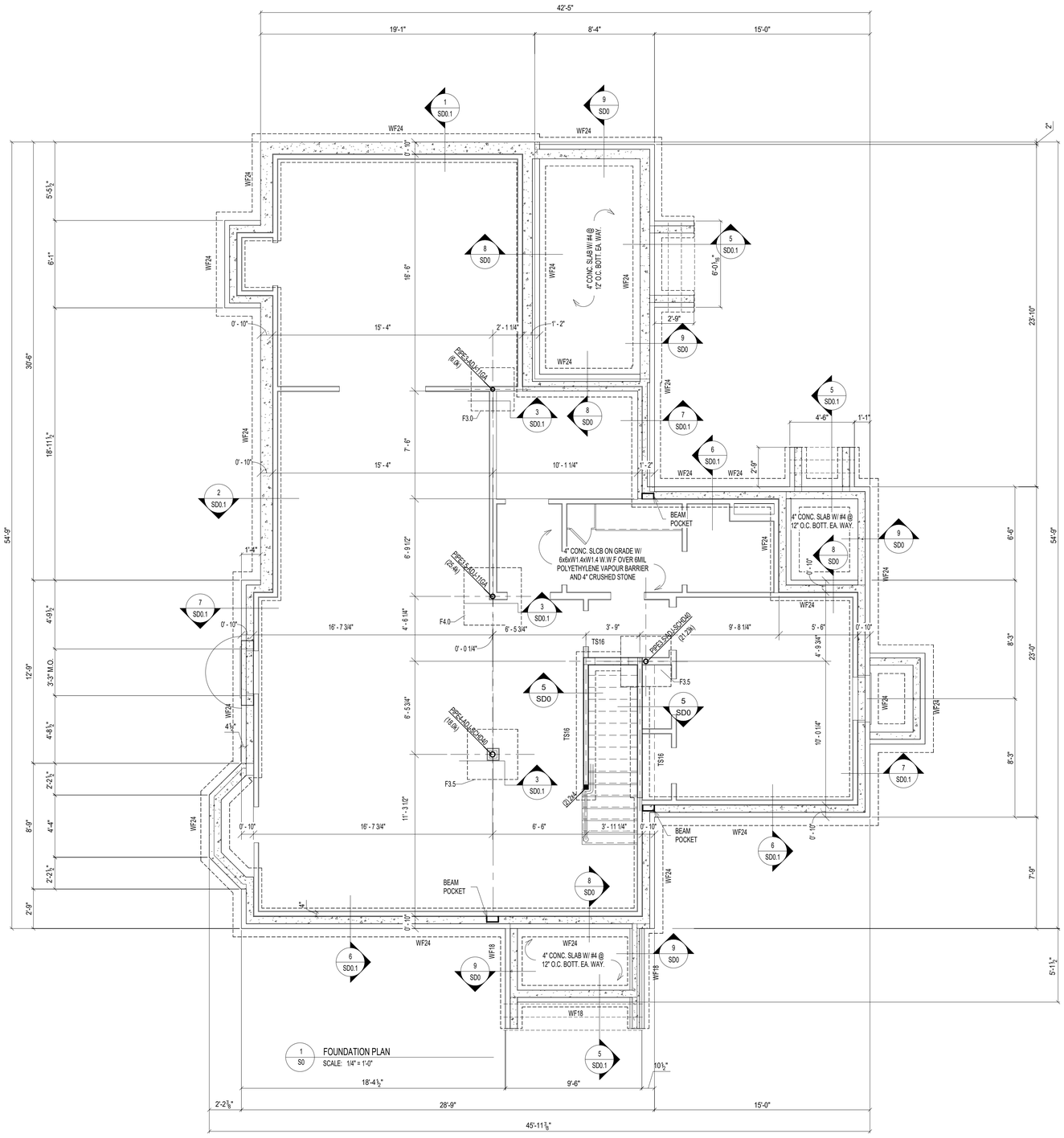

LEGENDS:

TS = THICKENED SLAB
WF = WALL FOOTING
F = FOOTING

FOUNDATION NOTES:

1. FOUNDATION DESIGN IS BASED ON ASSUMED DESIGN CRITERIA AS SPECIFIED ON GENERAL NOTES SHEET. AND SHALL BE FIELD VERIFIED BY GEOTECHNICAL ENGINEER. NOTIFY ENGINEER IF ANY DESCRIPANCIES ARE FOUND OR CRITERIA DIFFERS FROM ASSUMED CRITERIA.
2. VERIFY AND COORDINATE ALL DIMENSIONS WITH ARCHITECTURAL AND CIVIL DRAWINGS. NOTIFY ENGINEER IF ANY COORINDATION IS REQUIRED.
3. BASEMENT SLAB SHALL BE 4" CONC. SLAB ON GRADE WITH 6x6xW1.4xW1.4 W.W.F U.N.O.
4. ALL EXTERIOR FOOTINGS SHALL BE LOWERED TO MINIMUM FROST DEPTH AS REQUIRED BY LOCAL JURISDICTIONS.
5. PROVIDE MIN. 3'-0"x3'-0"x12" CONC. FOOTING W/ #5 @ 12" O.C. BOTT. EA. WAY. UNDER EACH POST UNLESS NOTED OTHERWISE ON FOUDATION PLAN.
6. PROVIDE MIN. 16"x12" CONC. THICKENED SLAB UNDER BEARING WALLS UNLESS NOTED OTHERWISE.
7. PROVIDE MIN. 24"x8" CONC. WALL FOOTING W/ MIN. (2) #4 CONT. AT BOTT. UNDER ALL FOUNDATION WALLS UNLESS NOTED OTHERWISE.
8. PROVIDE WATERPROOFING, DAMP PROOFING PER APPLICABLE CODES AT FOUNDATION WALL, FOOTINGS AND SLABS.
9. INSTALL CONTINUOUS 4"Ø PERFORATED DRAIN PIPES ON EACH SIDE OF FOOTING. CONNECTED WITH 1 1/2"Ø WEEP HOLES @ 8'-0" O.C. AND DRAIN TO SUMP PUMP OR DAY LIGHT.

PLAN LEGENDS & SYMBOLS:

- INDICATES BEARING WALL
- INDICATES DRAIN HOLE FROM ABOVE
- INDICATES JOIST/TRUSS HANEGR (REFER TO SHOP DWGS)
- INDICATES FRAMING DIRECTION
- INDICATES REBAR DIRECTION
- (_J+_S) — INDICATES NO. OF KING STUDS AT EACH END; INDICATES NO. OF JACK STUDS AT EACH END
- WF?? — INDICATES WALL FOOTING; WIDTH OF WALL FOOTING IN INCHES
- TS?? — INDICATES THICKENED SLAB; WIDTH OF THICKENED SLAB IN INCHES
- Fx.x — INDICATES ISOLATED COLUMN FOOTING; INDICATES SIZE OF FOOTING IN DECIMAL FEET
- ML?? — MICROLAM LVL 2.0E; DEPTH OF MICROLAM LVL IN INCHES
- LSL?? — LAMINATED STRAND LUMBER 1.7E; DEPTH OF TIMBERSTAND LSL BEAM IN INCHES
- PSL?? — PARALLAM STRAND LUMBER 2.0E; WIDTHxDEPTH OF MEMBER
- CC — COLUMN CAP
- CB — COLUMN BASE
- HD — HOLD DOWN ANCHOR
- MS — METAL STRAP
- H — JOIST/TRUSS/BEAM HANGER
- HC — HURRICANE CLIPS

BASEMENT FOUNDATION WALL SCHEDULE (MAX. UNSPPORTED HEIGHT = 9'-0")

THICKNESS	UNBALANCED BACK FILL HEIGHT	VERTICAL REBARS (E.F.P. = 30 PSF/FT)	VERTICAL REBARS (E.F.P. = 45 PSF/FT)	VERTICAL REBARS (E.F.P. = 60 PSF/FT)	HORIZONTAL REBARS
8"	UP TO 5'-0"	NOT REQD.	NOT REQD.	NOT REQUIRED	#4 @ 24" O.C.
	5'-0" < HT < 6'-0"	NOT REQD.	NOT REQD.	#5 @ 36" O.C.	
	6'-0" < HT < 7'-0"	NOT REQD.	#5 @ 36" O.C.	#5 @ 24" O.C.	
	7'-0" < HT < 8'-0"	#4 @ 24" O.C.	#5 @ 24" O.C.	#5 @ 20" O.C.	
	8'-0" < HT < 9'-0"	#4 @ 18" O.C.	#5 @ 20" O.C.	#5 @ 16" O.C.	

NOTE:
1. BASED ON TABLE 3.12 OF PCA-100 "PRESCRIPTIVE DESIGN OF EXTERIOR CONCRETE WALLS" WITH FOLLOWING CRITERIA
2. f'C' = 3000 psi & Fy = 60000 ksi
3. E.F.P. = EQUIVALENT EARTH PRESSURE
4. MAXIMUM WALL HEIGHT = 9'-0"
5. MIN. COVER TO REINFORCEMENT AT INSIDE FACE = 3/4" & MIN. COVER TO REINFORCEMENT AT OUTSIDE FACE = 1 1/2"
6. PROVIDE MINIMUM ONE #4 REBAR 12" FROM TOP & BOTTOM.
7. PROVIDE PROPER DRAINAGE TO THE BACKFILL REFER TO ARCHITECTURAL DRAWINGS FOR DRAINAGE AND WATEPROOFING
8. REFER TO GEOTECHNICAL REPORT FOR ALL FURTHER RECOMMENDATIONS. GEOTECHNICAL ENGINEER TO VERIFY FOUNDATION DESIGN CRITERIA FOR SOIL BEARING CAPACTY AND EARTH PRESSURE.
9. REBARS CAN BE SUBSTITUTED WITH #4 REBARS TO MATCH SPECIFIED AREA OF REINFORCEMENT IN ABOVE TABLE

BASEMENT FOUNDATION WALL SCHEDULE (MAX. UNSPPORTED HEIGHT = 9'-0")

THICKNESS	UNBALANCED BACK FILL HEIGHT	VERTICAL REBARS (E.F.P. = 30 PSF/FT)	VERTICAL REBARS (E.F.P. = 45 PSF/FT)	VERTICAL REBARS (E.F.P. = 60 PSF/FT)	HORIZONTAL REBARS
10"	UP TO 6'-0"	NOT REQD.	NOT REQD.	NOT REQD.	#4 @ 24" O.C.
	6'-0" < HT < 7'-0"	NOT REQD.	NOT REQD.	#4 @ 24" O.C.	
	7'-0" < HT < 8'-0"	NOT REQD.	#4 @ 18" O.C.	#4 @ 16" O.C.	
	8'-0" < HT < 9'-0"	NOT REQD.	#4 @ 16" O.C.	#4 @ 12" O.C.	

NOTE:
1. BASED ON TABLE A.4 OF ACI 332-10 WITH FOLLOWING CRITERIA
2. f'C' = 3000 psi & Fy = 60000 ksi
3. E.F.P. = EQUIVALENT EARTH PRESSURE
4. MAXIMUM WALL HEIGHT = 9'-0"
5. MIN. COVER TO REINFORCEMENT AT INSIDE FACE = 3/4" & MIN. COVER TO REINFORCEMENT AT OUTSIDE FACE = 1 1/2"
6. PROVIDE MINIMUM ONE #4 REBAR 12" FROM TOP & BOTTOM.
7. PROVIDE PROPER DRAINAGE TO THE BACKFILL REFER TO ARCHITECTURAL DRAWINGS FOR DRAINAGE AND WATEPROOFING
8. REFER TO GEOTECHNICAL REPORT FOR ALL FURTHER RECOMMENDATIONS. GEOTECHNICAL ENGINEER TO VERIFY FOUNDATION DESIGN CRITERIA FOR SOIL BEARING CAPACTY AND EARTH PRESSURE.

COLUMN FOOTING SCHEDULE

MARK	DESCRIPTION
F3.0	3'-0" x 3'-0" x 12" CONC. FTG W/ #4 @ 12" O.C. BOTT. EA. WAY
F3.5	3'-6" x 3'-6" x 12" CONC. FTG W/ #4 @ 12" O.C. BOTT. EA. WAY
F4.0	4'-0" x 4'-0" x 12" CONC. FTG W/ #5 @ 12" O.C. BOTT. EA. WAY

CONCRETE LINTEL SCHEDULE

MARK	DESCRIPTION
CB812	8" x 12" CONC. LINTEL W/ (2) #5 CONT. @ BOTT.
CB1012	10" x 12" CONC. LINTEL W/ (2) #5 CONT. @ BOTT.

WALL FOOTING SCHEDULE

MARK	DESCRIPTION
TS16	16" x 8" CONC. THICKENED SLAB W/ (2) #4 CONT. @ BOTT.
WF18	18" x 8" CONC. FTG. W/ (2) #4 CONT. @ BOTT.
WF24	24" x 8" CONC. FTG. W/ (2) #4 CONT. @ BOTT.

© COPYRIGHT 2016
Structural Engineering content of this drawings are property of structBIM LLC and are issued for this project only. Any re-use or re-production of these drawings shall not be done without written consent of structBIM LLC. These drawings are to be read in conjuction with project specifications and drawings from other consultants. These drawings shall not be used as shop drawings. Do not scale drawings, use dimensions as specified.

GTM ARCHITECTS

7735 OLD GEORGETOWN ROAD
SUITE 700
BETHESDA, MD 20814
(240)333-2000
(240)333-2001 FAX
WWW.GTMARCHITECTS.COM

GTM

Seal

STATE OF MARYLAND — KESHAL KANDEL — 40082 — PROFESSIONAL ENGINEER

Consultant

structBIM ENGINEERS
WE DESIGN....WE BIM
46400 BENEDICT DR, SUITE #211
PHONE: 703-657-4481
E-MAIL: info@structBIM.com

Project

23 HIGH STREET, LOT 2,
BROOKVILLE, MD

I certify that these documents were prepared or approved by me, and that I am a duly licensed Professional Engineer under the laws of the State of Maryland, license number 40082, Expiration Date: 02-13-2023.

Issue Description	*Date*

structBIM Project No.	21-0244
Checked By	KK
Drawn By	KK
Scale	1/4" = 1'-0"

Sheet Title

FOUNDATION PLAN

Sheet No.

S0

COPYRIGHT, 2016 structBIMEngineers, LLC.

PLOTTED ON: 4/15/2022 3:01:40 PM

FILE NAME:

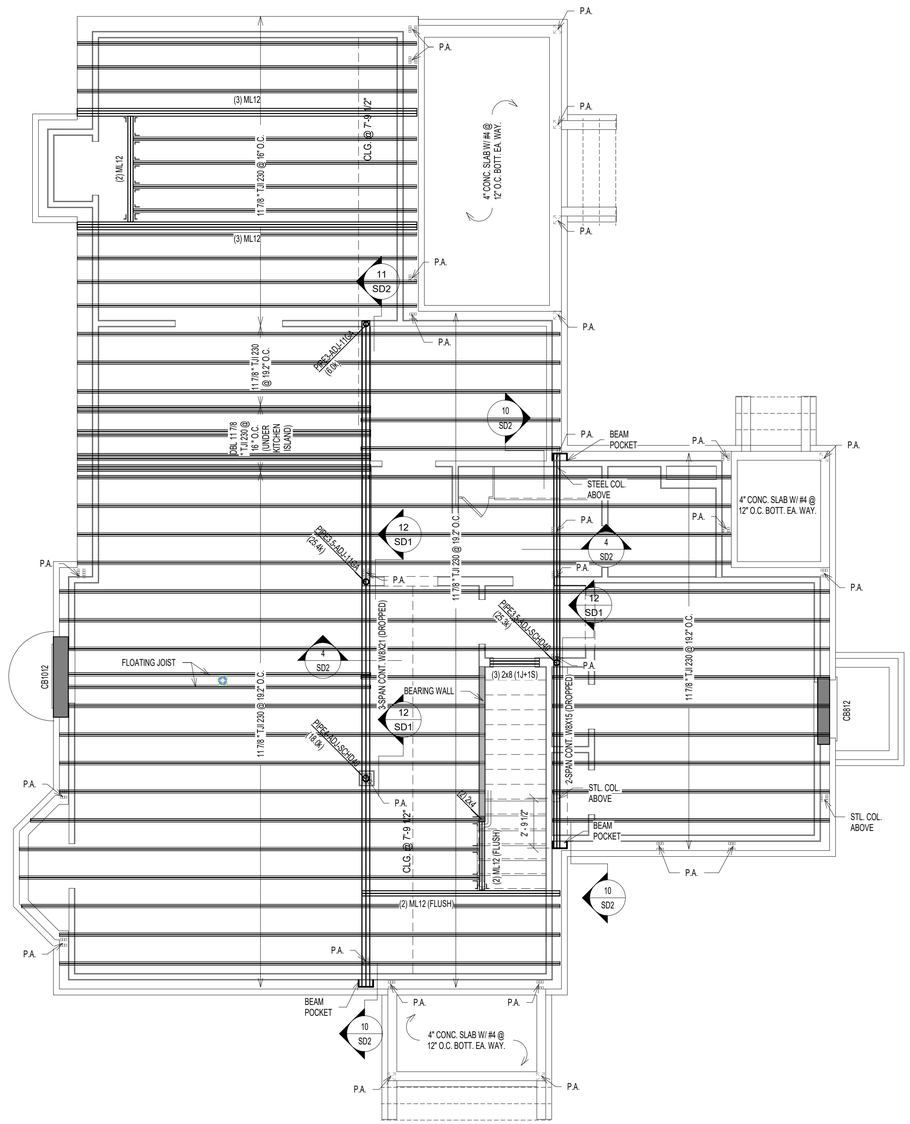

1 / S1 FIRST FLOOR FRAMING PLAN
SCALE: 1/4" = 1'-0"

NOTES:

1. FLOOR JOISTS SHALL BE SPACED @ 16" O.C. UNLESS NOTED OTHERWISE.
2. (J) INDICATED JACK STUDS & (S) INDICATES KING STUDS. EXAMPLE: 1J+1S = ONE JACK STUD & ONE KING STUD AT EACH END OF SPECIFIED HEADER.
3. FLOOR SHEATHING SHALL BE 3/4" APA RATED 3/4" T&G PLYWOOD WITH SPAN RATING OF 48/24 OR STURD-I-FLOOR WITH 24" O.C. GRADE.
4. WALL SHEATHING SHALL BE 7/16" APA RATED OSB/PLYWOOD CONTINUOUS SHEATHING W/ 8d NAILS @ 6" O.C.ON EDGES AND 12" O.C. IN-FIELD.
5. INSTALL BRIDGING BETWEEN JOISTS AT MID-SPAN OR AS REQUIRED PER MANUFACTURER BRIDGING BETWEEN JOISTS UNDER KITCHEN PLATFORMS AND CERAMIC TILE AREAS FOR MIN.THREE JOIST BAYS @ 8'-0" O.C. MAX.
6. FLOOR JOISTS SHALL HAVE 1/2" GYPSUM BOARD CEILING ATTACHED DIRECTLY TO UNDERSIDE OF BOTTOM FLANGE OF JOIST. NOTIFY ENGINEER OF ANY UNFINISHED AREAS.
7. ALL JOISTS ARE DESIGNED PER MIN. PRO RATING (BASED ON iLEVEL WEYERHAEUSER PRO RATING CRITERIA) CRITERIA OF 38. NOTIFY ENGINEER, IF HIGHER PRO RATING IS REQUIRED.
8. INSTALL SQUASH BLOCKS AT EVERY BEARING LOCATION AND PROVIDE SOLID BLOCKING UNDER EVERY BEARING WALL FROM ABOVE AT ALL I JOISTS.
9. PROVIDE JOISTS AT MAX. 16" O.C. SPACING UNDER CERAMIC TILE AREAS. JOIST MANUFACTURER TO DESIGN JOISTS FOR DEFLECTION LIMIT OF L/720 OR 0.3" MAX. COORDINATE LOCATION OF CERAMIC TILE AREAS WITH ARCHITECTURAL DRAWINGS.
10. PROVIDE DOUBLE JOISTS UNDER KITCHEN ISLANDS, OVERSIZED BATH TUBS.
11. WEB STIFFENERS ARE REQUIRED WHEN INTERMEDIATE BEARING LENGTH IS LESS THAN 5 1/4" AND SPAN ON EITHER SIDE OF BEARING IS LARGER THAN REQUIRED PER JOIST MANUFACTURER.
12. PROTECT ALL UNTREATED WOOD FROM DIRECT CONTACT WITH CONCRETE OR MASONRY.
13. PROVIDE SQUASH BLOCKS ON BOTH SIDES AT BEARING WALL LOCATIONS WITH ONE 10d NAILS AT EACH FLANGE.
14. PROVIDE BLOCKING PANELS PER MANUFACTURER'S SPECIFICATIONS, IF JOISTS ARE SUPPORTING SHEAR WALL FROM ABOVE.
15. PROVIDE SOLID BLOCKING BETWEEN JOISTS WHEN SUPPORTING BEARING WALL FROM ABOVE.
16. PROVIDE BACKER/FILLER BLOCKS AS RECOMMENDED BY JOIST MANUFACTURER AT CONNECTION LOCATIONS OR MULTIPLE JOISTS SUPPORTING POSTS FROM ABOVE.
17. DO NOT CUT HOLES OR NOTCHES WITHOUT PRIOR APPROVAL FROM ENGINEER OR JOIST MANUFACTURER.
18. PROVIDE SOLID BLOCKING OF SAME SIZE WITHIN FLOOR SYSTEM UNDER ALL JACK STUDS, KING STUDS & POSTS FROM ABOVE.
19. PROVIDE MIN. (2) 2x12 UP TO 4'-0" SPAN, (2) ML10 FOR 4'-0" TO 6'-0" SPAN, (2) ML12 6'-0" TO 9'-0" SPAN WHERE BEAM SIZES ARE NOT SPECIFIED ON PLANS. ANY SPANS LARGER THAN 9'-0" SUPPORITNG FRAMING AND NOT SPECIFIED ON PLANS SHALL BE NOTIFIED TO ENGINEER IMMEDIATELY.
20. PROVIDE MIN. DOUBLE JOISTS OR SPECIAL FLOOR TRUSS UNDER (2) 2x POSTS AND (2) PLY MICROLAM LVL OR SPECIAL FLOOR TRUSS TO MATCH FLOOR THICKNESS UNDER (3) 2x POSTS UNLESS NOTED OTHERWISE ON THE PLAN. CONTRACTOR SHALL NOTIFY ENGINEER FOR SUPPORTING STRUCTURAL MEMBER FOR ALL OTHER POST SIZES COMING FROM ABOVE.
21. PROVIDE MIN. (3) 2x POST UNDER BEAMS UNLESS NOTED OTHERWISE.
22. ALL POSTS SHALL CONTINUE DOWN TO FOUNDATION OR STRUCTURAL MEMBER SUCH AS BEAM/GIRDER TRUSS BELOW.
23. PROVIDE MIN. 3 JACK STUDS + 2 KING STUDS AT ALL HEADERS UNLESS NOTED OTHERWISE.
24. ALL WALL STUDS SHALL SPF#2 AND SHALL BE SPACED AT MAX. 16" O.C. UNLESS NOTED OTHERWISE.
25. ALL TWO STORY HIGH WALLS SHALL BE (2) 2x6 SPF#2 BALLOON FRAMED UNLESS NOTED OTHERWISE.
26. PROVIDE FULL HEIGHT BLOCKING BETWEEN JOISTS UP TO THREE JOIST BAYS WHERE JOISTS ARE PARALLEL TO FOUNDATION WALL.

PLAN LEGENDS & SYMBOLS:

- INDICATES BEARING WALL
- INDICATES DRAIN HOLE FROM ABOVE
- INDICATES JOIST/TRUSS HANEGR (REFER TO SHOP DWGS)
- INDICATES FRAMING DIRECTION
- INDICATES REBAR DIRECTION
- (_J+_S) — INDICATES NO. OF KING STUDS AT EACH END; INDICATES NO. OF JACK STUDS AT EACH END
- WF?? — INDICATES WALL FOOTING; WIDTH OF WALL FOOTING IN INCHES
- TS?? — INDICATES THICKENED SLAB; WIDTH OF THICKENED SLAB IN INCHES
- Fx.x — INDICATES ISOLATED COLUMN FOOTING; INDICATES SIZE OF FOOTING IN DECIMAL FEET
- ML?? — MICROLAM LVL 2.0E; DEPTH OF MICROLAM LVL IN INCHES
- LSL?? — LAMINATED STRAND LUMBER 1.7E; DEPTH OF TIMBERSTAND LSL BEAM IN INCHES
- PSL?? — PARALLAM STRAND LUMBER 2.0E; WIDTHxDEPTH OF MEMBER
- CC — COLUMN CAP
- CB — COLUMN BASE
- HD — HOLD DOWN ANCHOR
- MS — METAL STRAP
- H — JOIST/TRUSS/BEAM HANGER
- HC — HURRICANE CLIPS

MICROLAM LVL BEAM SCHEDULE

MARK	DESCRIPTION
(2) ML12	(2) 1 3/4" x 11 7/8" LVL - 1.9E
(3) ML10	(3) 1 3/4" x 9 1/2" LVL - 1.9E
(3) ML12	(3) 1 3/4" x 11 7/8" LVL - 1.9E
(4) ML12	(4) 1 3/4" x 11 7/8" LVL - 1.9E

STEEL COLUMN SCHEDULE

MARK	DESCRIPTION
PIPE3-ADJ-11GA	3"Ø x 11 GA. ADJUSTABLE STEEL PIPE COLUMN
PIPE3.5-ADJ-11GA	3.5Ø x 11GA. ADJUSTABLE STEEL PIPE COLUMN
PIPE3.5-ADJ-SCHD40	3 1/2"Ø (O.D.) SCHEDULE 40 ADJUSTABLE STEEL PIPE COLUMN
PIPE4-ADJ-SCHD40	4"Ø (O.D.) SCHEDULE 40 ADJUSTABLE STEEL PIPE COLUMN

© COPYRIGHT 2016
Structural Engineering content of this drawings are property of structBIM LLC and are issued for this project only. Any re-use or re-production of these drawings shall not be done without written consent of structBIM LLC. These drawings are to be read in conjuction with project specifications and drawings from other consultants. These drawings shall not be used as shop drawings. Do not scale drawings, use dimensions as specified.

GTM ARCHITECTS

7735 OLD GEORGETOWN ROAD
SUITE 700
BETHESDA, MD 20814
(240)333-2000
(240)333-2001 FAX
WWW.GTMARCHITECTS.COM

GTM

Seal

STATE OF MARYLAND — KAMAL KHALIL — 40082 — PROFESSIONAL ENGINEER

Consultant

structBIM ENGINEERS
WE DESIGN....WE BIM
46400 BENEDICT DR, SUITE #211
PHONE: 703-657-4481
E-MAIL: info@structBIM.com

Project

23 HIGH STREET, LOT 2,
BROOKVILLE, MD

I certify that these documents were prepared or approved by me, and that I am a duly licensed Professional Engineer under the laws of the State of Maryland, license number 40082, Expiration Date: 02-13-2023.

Issue Description	*Date*

structBIM Project No.	21-0244
Checked By	KK
Drawn By	KK
Scale	1/4" = 1'-0"

Sheet Title
FIRST FLOOR FRAMING PLAN

Sheet No.

S1

COPYRIGHT, 2016 structBIMEngineers, LLC.
PLOTTED ON: 4/15/2022 3:01:43 PM

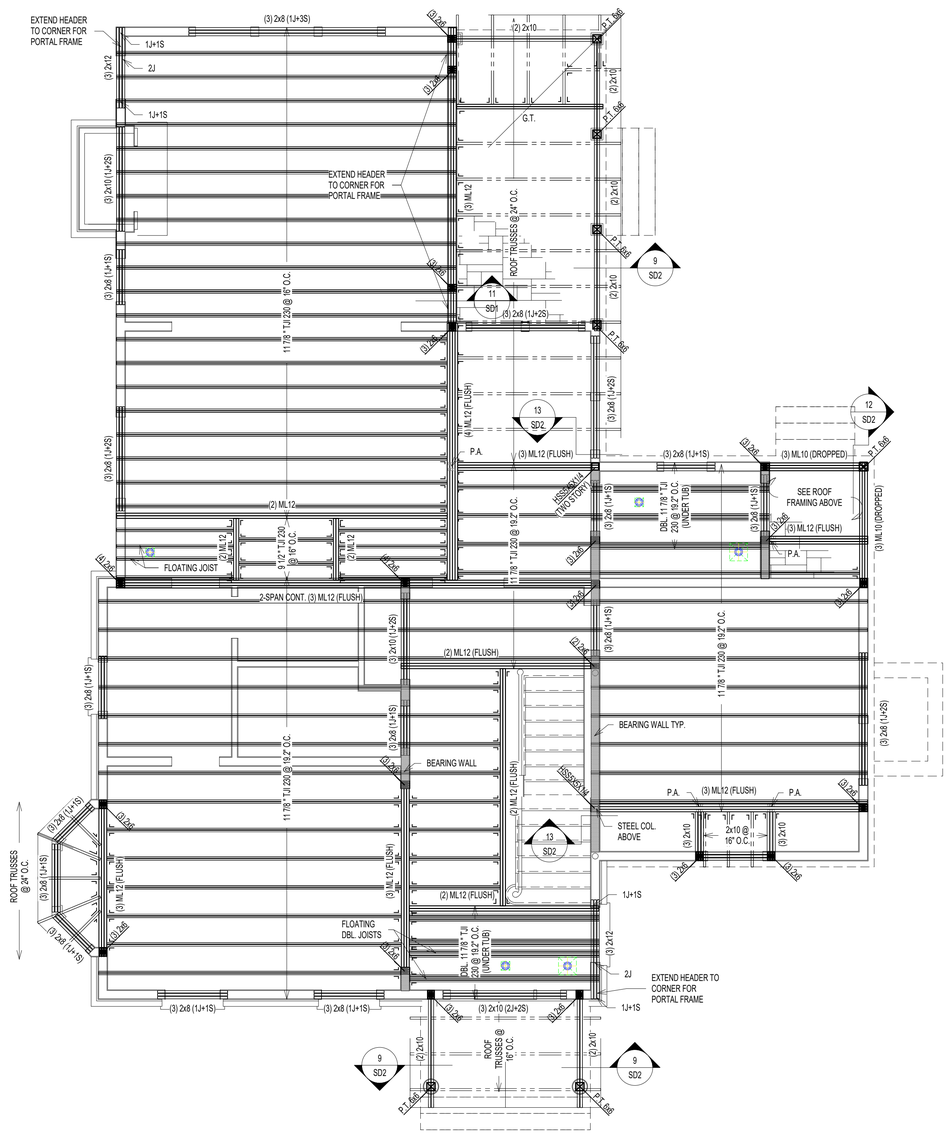

1 / S2 SECOND FLOOR FRAMING PLAN
SCALE: 1/4" = 1'-0"

NOTES:

1. FLOOR JOISTS SHALL BE SPACED @ 16" O.C. UNLESS NOTED OTHERWISE.
2. (J) INDICATED JACK STUDS & (S) INDICATES KING STUDS. EXAMPLE: 1J+1S = ONE JACK STUD & ONE KING STUD AT EACH END OF SPECIFIED HEADER.
3. FLOOR SHEATHING SHALL BE 3/4" APA RATED 3/4" T&G PLYWOOD WITH SPAN RATING OF 48/24 OR STURD-I-FLOOR WITH 24" O.C. GRADE.
4. WALL SHEATHING SHALL BE 7/16" APA RATED OSB/PLYWOOD CONTINUOUS SHEATHING W/ 8d NAILS @ 6" O.C.ON EDGES AND 12" O.C. IN-FIELD.
5. INSTALL BRIDGING BETWEEN JOISTS AT MID-SPAN OR AS REQUIRED PER MANUFACTURER BRIDGING BETWEEN JOISTS UNDER KITCHEN PLATFORMS AND CERAMIC TILE AREAS FOR MIN.THREE JOIST BAYS @ 8'-0" O.C. MAX.
6. FLOOR JOISTS SHALL HAVE 1/2" GYPSUM BOARD CEILING ATTACHED DIRECTLY TO UNDERSIDE OF BOTTOM FLANGE OF JOIST. NOTIFY ENGINEER OF ANY UNFINISHED AREAS.
7. ALL JOISTS ARE DESIGNED PER MIN. PRO RATING (BASED ON iLEVEL WEYERHAEUSER PRO RATING CRITERIA) CRITERIA OF 38. NOTIFY ENGINEER, IF HIGHER PRO RATING IS REQUIRED.
8. INSTALL SQUASH BLOCKS AT EVERY BEARING LOCATION AND PROVIDE SOLID BLOCKING UNDER EVERY BEARING WALL FROM ABOVE AT ALL I JOISTS.
9. PROVIDE JOISTS AT MAX. 16" O.C. SPACING UNDER CERAMIC TILE AREAS. JOIST MANUFACTURER TO DESIGN JOISTS FOR DEFLECTION LIMIT OF L/720 OR 0.3" MAX. COORDINATE LOCATION OF CERAMIC TILE AREAS WITH ARCHITECTURAL DRAWINGS.
10. PROVIDE DOUBLE JOISTS UNDER KITCHEN ISLANDS, OVERSIZED BATH TUBS.
11. WEB STIFFENERS ARE REQUIRED WHEN INTERMEDIATE BEARING LENGTH IS LESS THAN 5 1/4" AND SPAN ON EITHER SIDE OF BEARING IS LARGER THAN REQUIRED PER JOIST MANUFACTURER.
12. PROTECT ALL UNTREATED WOOD FROM DIRECT CONTACT WITH CONCRETE OR MASONRY.
13. PROVIDE SQUASH BLOCKS ON BOTH SIDES AT BEARING WALL LOCATIONS WITH ONE 10d NAILS AT EACH FLANGE.
14. PROVIDE BLOCKING PANELS PER MANUFACTURER'S SPECIFICATIONS, IF JOISTS ARE SUPPORTING SHEAR WALL FROM ABOVE.
15. PROVIDE SOLID BLOCKING BETWEEN JOISTS WHEN SUPPORTING BEARING WALL FROM ABOVE.
16. PROVIDE BACKER/FILLER BLOCKS AS RECOMMENDED BY JOIST MANUFACTURER AT CONNECTION LOCATIONS OR MULTIPLE JOISTS SUPPORTING POSTS FROM ABOVE.
17. DO NOT CUT HOLES OR NOTCHES WITHOUT PRIOR APPROVAL FROM ENGINEER OR JOIST MANUFACTURER.
18. PROVIDE SOLID BLOCKING OF SAME SIZE WITHIN FLOOR SYSTEM UNDER ALL JACK STUDS, KING STUDS & POSTS FROM ABOVE.
19. PROVIDE MIN. (2) 2x12 UP TO 4'-0" SPAN, (2) ML10 FOR 4'-0" TO 6'-0" SPAN, (2) ML12 6'-0" TO 9'-0" SPAN WHERE BEAM SIZES ARE NOT SPECIFIED ON PLANS. ANY SPANS LARGER THAN 9'-0" SUPPORTING FRAMING AND NOT SPECIFIED ON PLANS SHALL BE NOTIFIED TO ENGINEER IMMEDIATELY.
20. PROVIDE MIN. DOUBLE JOISTS OR SPECIAL FLOOR TRUSS UNDER (2) 2x POSTS AND (2) PLY MICROLAM LVL OR SPECIAL FLOOR TRUSS TO MATCH FLOOR THICKNESS UNDER (3) 2x POSTS UNLESS NOTED OTHERWISE ON THE PLAN. CONTRACTOR SHALL NOTIFY ENGINEER FOR SUPPORTING STRUCTURAL MEMBER FOR ALL OTHER POST SIZES COMING FROM ABOVE.
21. PROVIDE MIN. (3) 2x POST UNDER BEAMS UNLESS NOTED OTHERWISE.
22. ALL POSTS SHALL CONTINUE DOWN TO FOUNDATION OR STRUCTURAL MEMBER SUCH AS BEAM/GIRDER TRUSS BELOW.
23. PROVIDE MIN. 3 JACK STUDS + 2 KING STUDS AT ALL HEADERS UNLESS NOTED OTHERWISE.
24. ALL WALL STUDS SHALL SPF#2 AND SHALL BE SPACED AT MAX. 16" O.C. UNLESS NOTED OTHERWISE.
25. ALL TWO STORY HIGH WALLS SHALL BE (2) 2x6 SPF#2 BALLOON FRAMED UNLESS NOTED OTHERWISE.
26. PROVIDE FULL HEIGHT BLOCKING BETWEEN JOISTS UP TO THREE JOIST BAYS WHERE JOISTS ARE PARALLEL TO FOUNDATION WALL.

PLAN LEGENDS & SYMBOLS:

- INDICATES BEARING WALL
- INDICATES DRAIN HOLE FROM ABOVE
- INDICATES JOIST/TRUSS HANEGR (REFER TO SHOP DWGS)
- INDICATES FRAMING DIRECTION
- INDICATES REBAR DIRECTION
- (_J+_S) — INDICATES NO. OF KING STUDS AT EACH END; INDICATES NO. OF JACK STUDS AT EACH END
- WF?? — INDICATES WALL FOOTING; WIDTH OF WALL FOOTING IN INCHES
- TS?? — INDICATES THICKENED SLAB; WIDTH OF THICKENED SLAB IN INCHES
- Fx.x — INDICATES ISOLATED COLUMN FOOTING; INDICATES SIZE OF FOOTING IN DECIMAL FEET
- ML?? — MICROLAM LVL 2.0E; DEPTH OF MICROLAM LVL IN INCHES
- LSL?? — LAMINATED STRAND LUMBER 1.7E; DEPTH OF TIMBERSTAND LSL BEAM IN INCHES
- PSL?? — PARALLAM STRAND LUMBER 2.0E; WIDTHxDEPTH OF MEMBER
- CC — COLUMN CAP
- CB — COLUMN BASE
- HD — HOLD DOWN ANCHOR
- MS — METAL STRAP
- H — JOIST/TRUSS/BEAM HANGER
- HC — HURRICANE CLIPS

MICROLAM LVL BEAM SCHEDULE

MARK	DESCRIPTION
(2) ML12	(2) 1 3/4" x 11 7/8" LVL - 1.9E
(3) ML10	(3) 1 3/4" x 9 1/2" LVL - 1.9E
(3) ML12	(3) 1 3/4" x 11 7/8" LVL - 1.9E
(4) ML12	(4) 1 3/4" x 11 7/8" LVL - 1.9E

STEEL COLUMN SCHEDULE

MARK	DESCRIPTION
PIPE3-ADJ-11GA	3"Ø x 11 GA. ADJUSTABLE STEEL PIPE COLUMN
PIPE3.5-ADJ-11GA	3.50 x 11GA. ADJUSTABLE STEEL PIPE COLUMN
PIPE3.5-ADJ-SCHD40	3 1/2"Ø (O.D.) SCHEDULE 40 ADJUSTABLE STEEL PIPE COLUMN
PIPE4-ADJ-SCHD40	4"Ø (O.D.) SCHEDULE 40 ADJUSTABLE STEEL PIPE COLUMN

© COPYRIGHT 2016
Structural Engineering content of this drawings are property of structBIM LLC and are issued for this project only. Any re-use or re-production of these drawings shall not be done without written consent of structBIM LLC. These drawings are to be read in conjuction with project specifications and drawings from other consultants. These drawings shall not be used as shop drawings. Do not scale drawings, use dimensions as specified.

GTM ARCHITECTS
7735 OLD GEORGETOWN ROAD
SUITE 700
BETHESDA, MD 20814
(240)333-2000
(240)333-2001 FAX
WWW.GTMARCHITECTS.COM
GTM

Seal

STATE OF MARYLAND — KAMAL KHALIL — 40082 — PROFESSIONAL ENGINEER

Consultant

structBIM ENGINEERS
WE DESIGN....WE BIM
46400 BENEDICT DR, SUITE #211
PHONE: 703-657-4481
E-MAIL: info@structBIM.com

Project

23 HIGH STREET, LOT 2,
BROOKVILLE, MD

I certify that these documents were prepared or approved by me, and that I am a duly licensed Professional Engineer under the laws of the State of Maryland, license number 40082, Expiration Date: 02-13-2023.

Issue Description	*Date*

structBIM Project No.	21-0244
Checked By	KK
Drawn By	KK
Scale	1/4" = 1'-0"

Sheet Title
SECOND FLOOR
FRAMING PLAN

Sheet No.

S2

COPYRIGHT, 2016 structBIMEngineers, LLC.
PLOTTED ON: 4/15/2022 3:01:46 PM

FILE NAME:

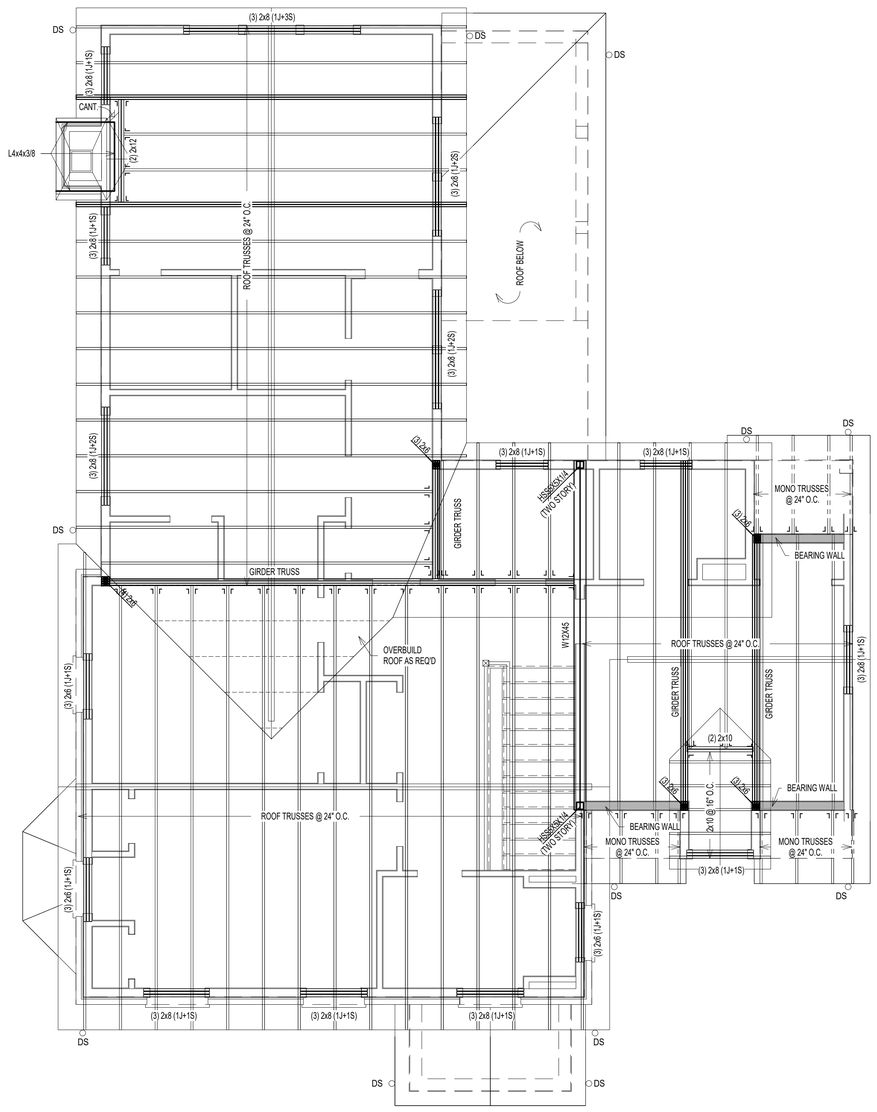

1 / S3 ROOF FRAMING PLAN
SCALE: 1/4" = 1'-0"

NOTES:

1. ALL TRUSSES SHALL BE PRE-FABRICATED ENGINEERED ROOF TRUSSES AND SHALL BE INSTALLED PER TRUSS MANUFACTURER'S LAYOUT AND DESIGN. SUBMIT SIGNED AND SEALED SHOP DRAWINGS FOR REVIEW.
2. ALL ROOF SHEATHING SHALL BE APA RATED 7/16" C-C, C-D OR STRUCTURAL II WITH SPAN RATING OF 48/24 PER "AMERICAN PLYWOOD ASSOCIATION". PROVIDE MIN. NAILING PATTERN W/ 8d COMMON NAILS @ 6" O.C. ON EDGES AND 12" O.C. IN FIELD. PROVIDE PLYWOOD CLIPS AT PLYWOOD EDGES BETWEEN EACH FRAMING MEMBER.
3. TRUSS LAYOUT SHOWN ON THESE DRAWINGS ARE FOR SCHEMATIC PURPOSES ONLY AND TO REFLECT DESIGN INTENT FOR OTHER FRAMING MEMBERS. THESE DRAWINGS SHALL NOT BE CONSIDERED AS SHOP DRAWINGS. TRUSS DESIGN DRAWINGS PREPARED BY TRUSS MANUFACTURER SHALL BE USED FOR TRUSS LAYOUT AND COORDINATION. NOTIFY ENGINEER IF VARIATION IS MADE IN TRUSS DESIGN DRAWINGS THAT AFFECTS ORIGINAL DESIGN INTENT.
4. COORDINATE ROOF SLOPES, VALLEYS, HEEL HEIGHTS WITH ARCHITECTURAL DRAWINGS.
5. INSTALL MINIMUM H2.5A HURRICANE CLIPS AT EACH TRUSS BEARING UNLESS SPECIFIED ON SHOP DRAWINGS.
6. AT ALL NON LOAD BEARING WALLS MAINTAIN 1/4" GAP BETWEEN BOTTOM OF TRUSS BOTTOM CHORD AND TOP OF TOP PLATE. INSTALL SIMPSON "STC" TRUSS CLIPS TO MAINTAIN GAP TO ALLOW TRUSS MOVEMENT.
7. ALL SECTIONS/DETAIL CUTS MARKED AS TYP. SHALL BE APPLIED AT ALL SIMILAR CONDITIONS ON ENTIRE PLAN.
8. TRUSS MANUFACTURER TO DESIGN NECESSARY TEMPORARY/PERMENANT BRACING AND SHALL SPECIFY ON SHOP DRAWINGS.
9. TRUSS MANUFACTURER TO SPECIFY NECESSARY CONNECTORS AND FASTENERS FOR ALL CONNECTIONS INCLUDING BUT NOT LIMITED TO UPLIFT CONNECTORS, HANGERS.
10. PROVIDE SOLID BLOCKING OF SAME SIZE WITHIN FLOOR SYSTEM UNDER ALL JACK STUDS, KING STUDS & POSTS FROM ABOVE.
11. PROVIDE MIN. (3) 2x POST UNDER ALL GIRDER TRUSSES UNLESS NOTED OTHERWISE.
12. PROVIDE MIN. TWO JACK STUDS + TWO KING STUDS AT ALL HEADERS UNLESS NOTED OTHERWISE.
13. ALL WALL STUDS SHALL BE SPF#2 OR EQ. APPROVED AND SPACED AT MAX. 16" O.C. UNLESS NOTED OTHERWISE.

PLAN LEGENDS & SYMBOLS:

- INDICATES BEARING WALL
- INDICATES DRAIN HOLE FROM ABOVE
- INDICATES JOIST/TRUSS HANEGR (REFER TO SHOP DWGS)
- INDICATES FRAMING DIRECTION
- INDICATES REBAR DIRECTION
- (_J+_S) — INDICATES NO. OF KING STUDS AT EACH END; INDICATES NO. OF JACK STUDS AT EACH END
- WF?? — INDICATES WALL FOOTING; WIDTH OF WALL FOOTING IN INCHES
- TS?? — INDICATES THICKENED SLAB; WIDTH OF THICKENED SLAB IN INCHES
- F.x.x — INDICATES ISOLATED COLUMN FOOTING; INDICATES SIZE OF FOOTING IN DECIMAL FEET
- ML?? — MICROLAM LVL 2.0E; DEPTH OF MICROLAM LVL IN INCHES
- LSL?? — LAMINATED STRAND LUMBER 1.7E; DEPTH OF TIMBERSTAND LSL BEAM IN INCHES
- PSL?? — PARALLAM STRAND LUMBER 2.0E; WIDTHxDEPTH OF MEMBER
- CC — COLUMN CAP
- CB — COLUMN BASE
- HD — HOLD DOWN ANCHOR
- MS — METAL STRAP
- H — JOIST/TRUSS/BEAM HANGER
- HC — HURRICANE CLIPS

MICROLAM LVL BEAM SCHEDULE

MARK	DESCRIPTION
(2) ML12	(2) 1 3/4" x 11 7/8" LVL - 1.9E
(3) ML10	(3) 1 3/4" x 9 1/2" LVL - 1.9E
(3) ML12	(3) 1 3/4" x 11 7/8" LVL - 1.9E
(4) ML12	(4) 1 3/4" x 11 7/8" LVL - 1.9E

STEEL COLUMN SCHEDULE

MARK	DESCRIPTION
PIPE3-ADJ-11GA	3"Ø x 11 GA. ADJUSTABLE STEEL PIPE COLUMN
PIPE3.5-ADJ-11GA	3.5Ø x 11GA. ADJUSTABLE STEEL PIPE COLUMN
PIPE3.5-ADJ-SCHD40	3 1/2"Ø (O.D.) SCHEDULE 40 ADJUSTABLE STEEL PIPE COLUMN
PIPE4-ADJ-SCHD40	4"Ø (O.D.) SCHEDULE 40 ADJUSTABLE STEEL PIPE COLUMN

© COPYRIGHT 2016
Structural Engineering content of this drawings are property of structBIM LLC and are issued for this project only. Any re-use or re-production of these drawings shall not be done without written consent of structBIM LLC. These drawings are to be read in conjuction with project specifications and drawings from other consultants. These drawings shall not be used as shop drawings. Do not scale drawings, use dimensions as specified.

GTM ARCHITECTS

7735 OLD GEORGETOWN ROAD
SUITE 700
BETHESDA, MD 20814
(240)333-2000
(240)333-2001 FAX
WWW.GTMARCHITECTS.COM

Seal

Consultant

structBIM ENGINEERS
WE DESIGN....WE BIM
46400 BENEDICT DR, SUITE #211
PHONE: 703-657-4481
E-MAIL: info@structBIM.com

Project

23 HIGH STREET, LOT 2,
BROOKVILLE, MD

I certify that these documents were prepared or approved by me, and that I am a duly licensed Professional Engineer under the laws of the State of Maryland, license number 40082, Expiration Date: 02-13-2023.

Issue Description	*Date*

structBIM Project No.	21-0244
Checked By	KK
Drawn By	KK
Scale	1/4" = 1'-0"

Sheet Title

ROOF FRAMING PLAN

Sheet No.

S3

COPYRIGHT, 2016 structBIMEngineers, LLC.
PLOTTED ON: 4/15/2022 3:01:49 PM

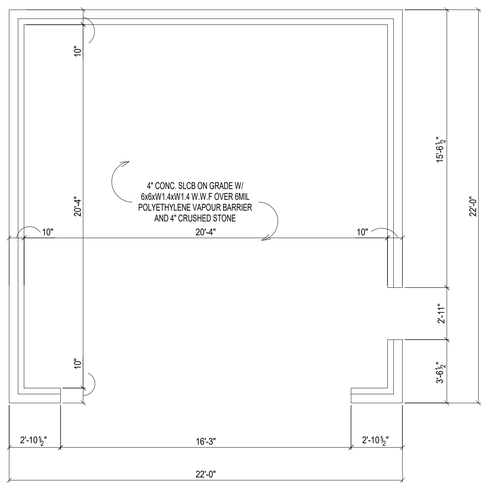

3 / S4 FIRST FLOOR GARAGE FRAMING PLAN
SCALE: 1/4" = 1'-0"

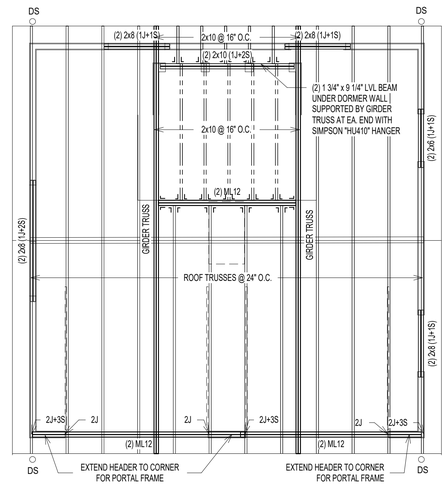

1 / S4 ROOF GARAGE FRANING PLAN
SCALE: 1/4" = 1'-0"

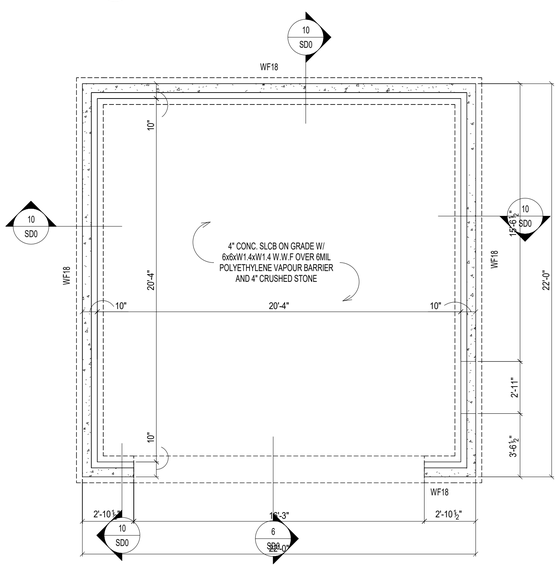

4 / S4 FOUNDATION PLAN
SCALE: 1/4" = 1'-0"

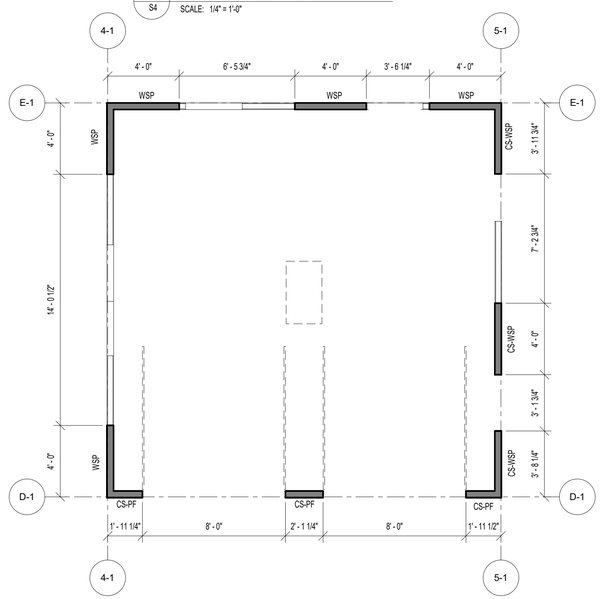

2 / S4 FIRST FLOOR GARAG WALL BRACING PLAN
SCALE: 1/4" = 1'-0"

NOTES:

1. ALL TRUSSES SHALL BE PRE-FABRICATED ENGINEERED ROOF TRUSSES AND SHALL BE INSTALLED PER TRUSS MANUFACTURERS LAYOUT AND DESIGN. SUBMIT SIGNED AND SEALED SHOP DRAWINGS FOR REVIEW.
2. ALL ROOF SHEATHING SHALL BE APA RATED 7/16" C-C, C-D OR STRUCTURAL II WITH SPAN RATING OF 48/24 PER "AMERICAN PLYWOOD ASSOCIATION". PROVIDE MIN. NAILING PATTERN W/ 8d COMMON NAILS @ 6" O.C. ON EDGES AND 12" O.C. IN FIELD. PROVIDE PLYWOOD CLIPS AT PLYWOOD EDGES BETWEEN EACH FRAMING MEMBER.
3. TRUSS LAYOUT SHOWN ON THESE DRAWINGS ARE FOR SCHEMATIC PURPOSES ONLY AND TO REFLECT DESIGN INTENT FOR OTHER FRAMING MEMBERS. THESE DRAWINGS SHALL NOT BE CONSIDERED AS SHOP DRAWINGS. TRUSS DESIGN DRAWINGS PREPARED BY TRUSS MANUFACTURER SHALL BE USED FOR TRUSS LAYOUT AND COORDINATION. NOTIFY ENGINEER IF VARIATION IS MADE IN TRUSS DESIGN DRAWINGS THAT AFFECTS ORIGINAL DESIGN INTENT.
4. COORDINATE ROOF SLOPES, VALLEYS, HEEL HEIGHTS WITH ARCHITECTURAL DRAWINGS.
5. INSTALL MINIMUM H2.5A HURRICANE CLIPS AT EACH TRUSS BEARING UNLESS SPECIFIED ON SHOP DRAWINGS.
6. AT ALL NON LOAD BEARING WALLS MAINTAIN 1/4" GAP BETWEEN BOTTOM OF TRUSS BOTTOM CHORD AND TOP OF TOP PLATE. INSTALL SIMPSON "STC" TRUSS CLIPS TO MAINTAIN GAP TO ALLOW TRUSS MOVEMENT.
7. ALL SECTIONS/DETAIL CUTS MARKED AS TYP. SHALL BE APPLIED AT ALL SIMILAR CONDITIONS ON ENTIRE PLAN.
8. TRUSS MANUFACTURER TO DESIGN NECESSARY TEMPORARY/PERMENANT BRACING AND SHALL SPECIFY ON SHOP DRAWINGS.
9. TRUSS MANUFACTURER TO SPECIFY NECESSARY CONNECTORS AND FASTENERS FOR ALL CONNECTIONS INCLUDING BUT NOT LIMITED TO UPLIFT CONNECTORS, HANGERS.
10. PROVIDE SOLID BLOCKING OF SAME SIZE WITHIN FLOOR SYSTEM UNDER ALL JACK STUDS, KING STUDS & POSTS FROM ABOVE.
11. PROVIDE MIN. (3) 2x POST UNDER ALL GIRDER TRUSSES UNLESS NOTED OTHERWISE.
12. PROVIDE MIN. TWO JACK STUDS + TWO KING STUDS AT ALL HEADERS UNLESS NOTED OTHERWISE.
13. ALL WALL STUDS SHALL BE SPF#2 OR EQ. APPROVED AND SPACED AT MAX. 16" O.C. UNLESS NOTED OTHERWISE.

PLAN LEGENDS & SYMBOLS:

- INDICATES BEARING WALL
- INDICATES DRAIN HOLE FROM ABOVE
- INDICATES JOIST/TRUSS HANEGR (REFER TO SHOP DWGS)
- INDICATES FRAMING DIRECTION
- INDICATES REBAR DIRECTION
- (_J+_S) — INDICATES NO. OF KING STUDS AT EACH END; INDICATES NO. OF JACK STUDS AT EACH END
- WF?? — INDICATES WALL FOOTING; WIDTH OF WALL FOOTING IN INCHES
- TS?? — INDICATES THICKENED SLAB; WIDTH OF THICKENED SLAB IN INCHES
- F.x.x — INDICATES ISOLATED COLUMN FOOTING; INDICATES SIZE OF FOOTING IN DECIMAL FEET
- ML?? — MICROLAM LVL 2.0E; DEPTH OF MICROLAM LVL IN INCHES
- LSL?? — LAMINATED STRAND LUMBER 1.7E; DEPTH OF TIMBERSTAND LSL BEAM IN INCHES
- PSL?? — PARALLAM STRAND LUMBER 2.0E; WIDTHxDEPTH OF MEMBER
- CC — COLUMN CAP
- CB — COLUMN BASE
- HD — HOLD DOWN ANCHOR
- MS — METAL STRAP
- H — JOIST/TRUSS/BEAM HANGER
- HC — HURRICANE CLIPS

Ultimate Wind Speed (mph)		115								
BWL Designation		D-1		E-1		4-1		5-1		
No. of Floors above BWL		0		0		0		0		
BWP Method		CS-PF		WSP		WSP		CS-WSP		
Average BWL Spacing (ft)		22		22		22		22		
Tabular Requirement (ft)		3.70		3.90		3.90		3.70		
Adjustments	Exposure	B	1.00	B	1.00	B	1.00	B	1.00	
	Eave-to-Ridge Ht. (ft)	11.00	1.06	11.00	1.06	11.00	1.06	11.00	1.06	
	Max. Wall Ht. (ft)	9.00	0.95	9.00	0.95	9.00	0.95	9.00	0.95	
	No. of BWLs	2	1.00	2	1.00	2	1.00	2	1.00	
	Omit Interior Finish?	No	1.00	No	1.00	No	1.00	No	1.00	
	Added Hold-downs?	No	1.00	No	1.00	No	1.00	No	1.00	
	Joints Blocked?	Yes	1.00	Yes	1.00	Yes	1.00	Yes	1.00	
	Fasteners @ 4" o.c.?	No	1.00	No	1.00	No	1.00	No	1.00	
Required BWP Length (ft)		3.73		3.93		3.93		3.73		
Actual BWPs	BWP	Method	Length	Method	Length	Method	Length	Method	Length	
	Contributing Length (ft)	CS-PF	2.00	WSP	4.00	WSP	4.00	CS-WSP	3.75	
	WSP:Practical	CS-PF	2.16	WSP	4.00	WSP	4.00	CS-WSP	4.00	
	DFB:Practical	CS-PF	2.00	WSP	4.00			CS-WSP	4.00	
	OB(3):HD:Practical									
	OB(6):Practical									
	CS-PF#1:Practical									
	PF#2#1:Practical									
	PF#2#2									
	ABW#4									
	4									
	5									
	6									
	7									
Actual BWP Length (ft)		6.16		12.00		8.00		11.75		
Actual ≥ Required?		PASS		PASS		PASS		PASS		
BWPs ≤ 20' Apart?		Yes		Yes		Yes		Yes		
≥ 2 Panels in BWL?		Yes		Yes		Yes		Yes		
BWP 10' from Ends?		Yes		Yes		Yes		Yes		
Continuous Sheathing		End 1	End 2	End 1	End 2	End 1	End 2	End 1	End 2	
End Conditions		1	1	1	1	1	1	1	1	
BWL Compliance		PASS		PASS		PASS		PASS		

© COPYRIGHT 2016
Structural Engineering content of this drawings are property of structBIM LLC and are issued for this project only. Any re-use or re-production of these drawings shall not be done without written consent of structBIM LLC. These drawings are to be read in conjuction with project specifications and drawings from other consultants. These drawings shall not be used as shop drawings. Do not scale drawings, use dimensions as specified.

GTM ARCHITECTS

7735 OLD GEORGETOWN ROAD
SUITE 700
BETHESDA, MD 20814
(240)333-2000
(240)333-2001 FAX
WWW.GTMARCHITECTS.COM

GTM

Seal

STATE OF MARYLAND — KAMAL KHANNA — 40082 — PROFESSIONAL ENGINEER

Consultant

structBIM ENGINEERS
WE DESIGN....WE BIM
46400 BENEDICT DR, SUITE #211
PHONE: 703-657-4481
E-MAIL: info@structBIM.com

Project

23 HIGH STREET, LOT 2,
BROOKVILLE, MD

I certify that these documents were prepared or approved by me, and that I am a duly licensed Professional Engineer under the laws of the State of Maryland, license number 40082, Expiration Date: 02-13-2023.

Issue Description	*Date*

structBIM Project No.	21-0244
Checked By	KK
Drawn By	KK
Scale	1/4" = 1'-0"

Sheet Title

GARAGE FRAMING PLAN

Sheet No.

S4

COPYRIGHT, 2016 structBIMEngineers, LLC.
PLOTTED ON: 4/15/2022 3:01:51 PM

FILE NAME:

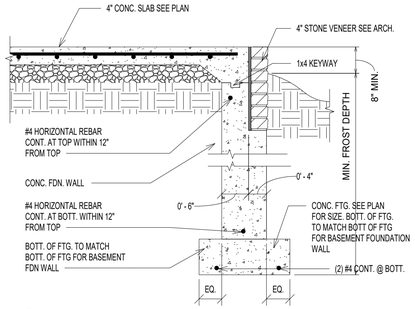

9 SD0 — SD0_12_FNDN_CONC_PORCH1
SCALE: 3/4" = 1'-0"

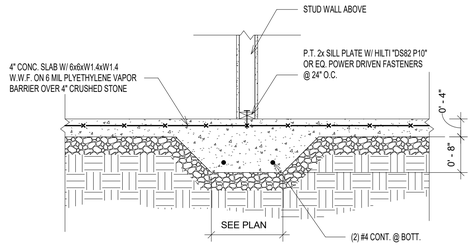

5 SD0 — INT. WALL THICKENED SLAB
SCALE: 3/4" = 1'-0"

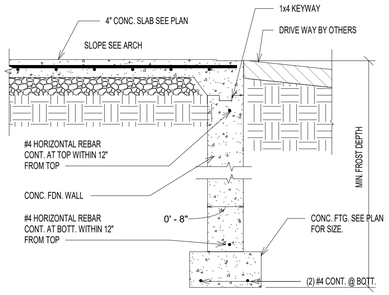

6 SD0 — FOUNDATION WALL @ GARAGE ENTRY
SCALE: 3/4" = 1'-0"

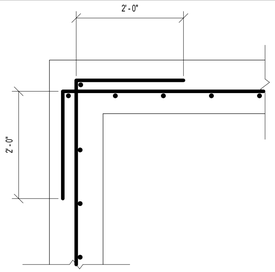

TYP. CORNER REINFORCEMENT DETAIL (PLAN VIEW)

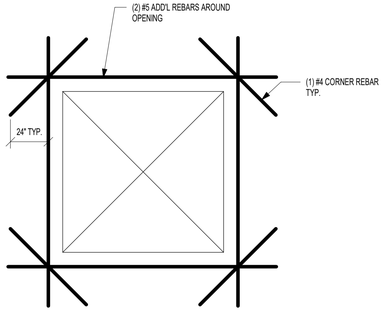

TYP. REINFORCEMENT AROUND OEPNING(ELEVATION VIEW)

1 SD0 — TYP. REINFORCEMENT AT WALL CORNER & OPENING
SCALE: 3/4" = 1'-0"

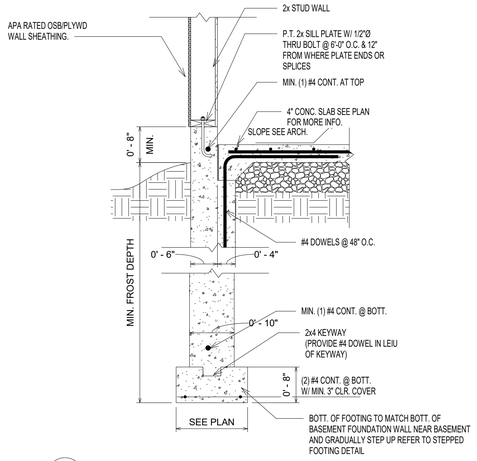

10 SD0 — TYP. FOUNDATION WALL @ GARAGE W/ SIDING
SCALE: 3/4" = 1'-0"

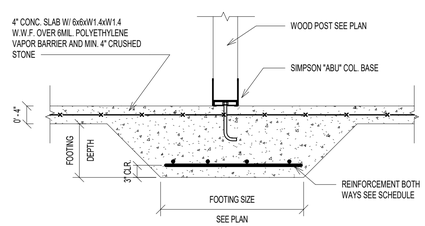

7 SD0 — TYPICAL WOOD COLUMN FOOTING
SCALE: 3/4" = 1'-0"

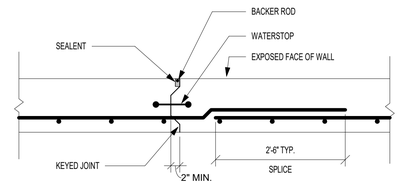

NOTE: PROVIDE CONSTRUCTION OR CONTROL JOINTS IN FOUNDATION WALLS AT EVERY 40'-0" TYPICAL.

2 SD0 — TYP CONTROL JOINT @ FOUNDATION WALL
SCALE: 3/4" = 1'-0"

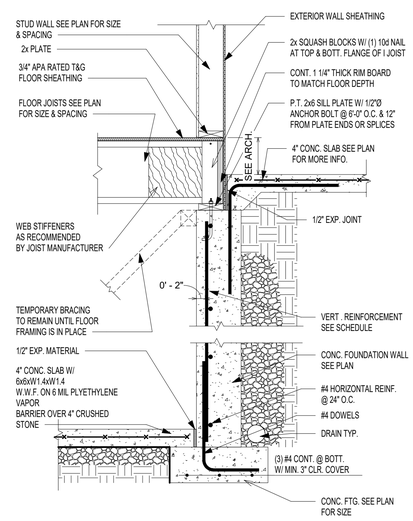

8 SD0 — TYP. FOUNDATION WALL SECTION @ PORCH
SCALE: 3/4" = 1'-0"

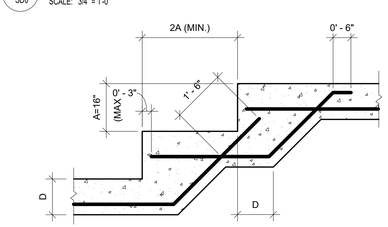

NOTE: SEE PLAN FOR REINFORCING AND OTHER INFO.

3 SD0 — TYP. STEPPED FOOTING DETAIL
SCALE: 1/2" = 1'-0"

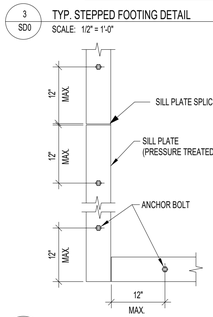

NOTES:

1. MINIMUM SILL BOLTING TO CONCRETE SHALL BE 1/2"Ø ANCHOR BOLTS, OR EQUAL, AT 6'-0" O.C. WITH 7" MINIMUM EMBEDMENT.

2. ALL ANCHORS FOR SILL PLATES SUPPORTING SHEAR WALLS (SW) SHALL HAVE MIN. 3"x3" STEEL WASHERS AND SHALL EXTEND A MINIMUM OF 2" ABOVE TOP OF SILL.

3. PROVIDE MINIMUM (2) BOLTS PER PIECE.

4. SEE OTHER DETAILS FOR USE OF MUDSILL ANCHORS IN LIEU OF ANCHOR BOLTS.

4 SD0 — TYP. SILL PLATE ANCHORAGE
SCALE: 3/4" = 1'-0"

© COPYRIGHT 2016
Structural Engineering content of this drawings are property of structBIM LLC and are issued for this project only. Any re-use or re-production of these drawings shall not be done without written consent of structBIM LLC. These drawings are to be read in conjuction with project specifications and drawings from other consultants. These drawings shall not be used as shop drawings. Do not scale drawings, use dimensions as specified.

GTM ARCHITECTS

7735 OLD GEORGETOWN ROAD
SUITE 700
BETHESDA, MD 20814
(240)333-2000
(240)333-2001 FAX
WWW.GTMARCHITECTS.COM

GTM

Seal

Consultant

structBIM ENGINEERS
WE DESIGN....WE BIM
46400 BENEDICT DR, SUITE #211
PHONE: 703-657-4481
E-MAIL: info@structBIM.com

Project

23 HIGH STREET, LOT 2,
BROOKVILLE, MD

I certify that these documents were prepared or approved by me, and that I am a duly licensed Professional Engineer under the laws of the State of Maryland, license number 40082, Expiration Date: 02-13-2023.

Issue Description	*Date*

structBIM Project No.	21-0244
Checked By	KK
Drawn By	KK
Scale	As indicated

Sheet Title

FOUNDATION DETAILS

Sheet No.

SD0

COPYRIGHT, 2016 structBIMEngineers, LLC.
PLOTTED ON: 4/15/2022 3:01:56 PM

FILE NAME:

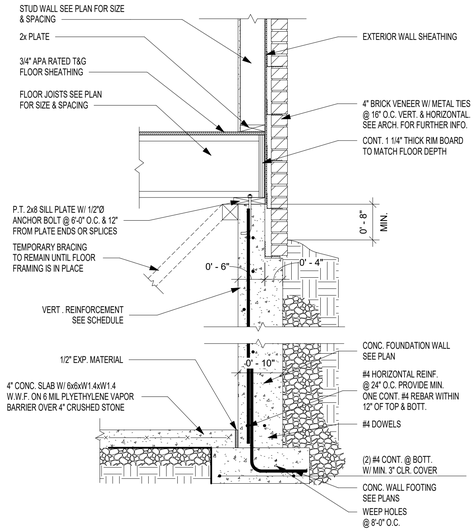

7 SD0.1 FNDN_BSMT_CONC_12_02_I-JOISTS-PARALLEL
SCALE: 3/4" = 1'-0"

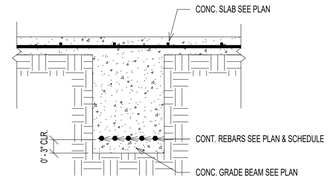

4 SD0.1 TYP. GRADE BEAM DETAIL
SCALE: 3/4" = 1'-0"

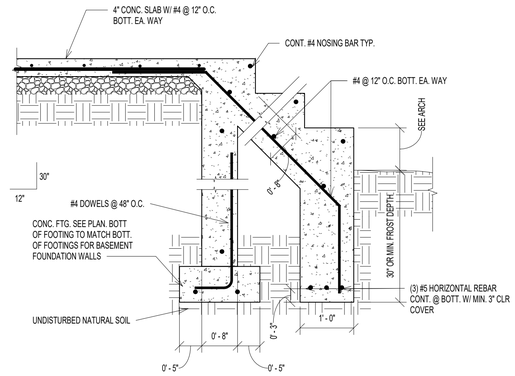

NOTE: VERIFY STEPS AND GRADE WITH ARCHITECTURAL DRAWINGS.

5 SD0.1 STEPS @ PORCH
SCALE: 3/4" = 1'-0"

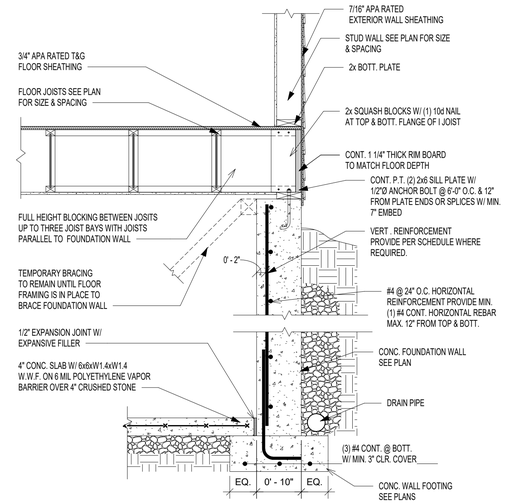

1 SD0.1 TYP. FOUNDATION WALL SECTION
SCALE: 3/4" = 1'-0"

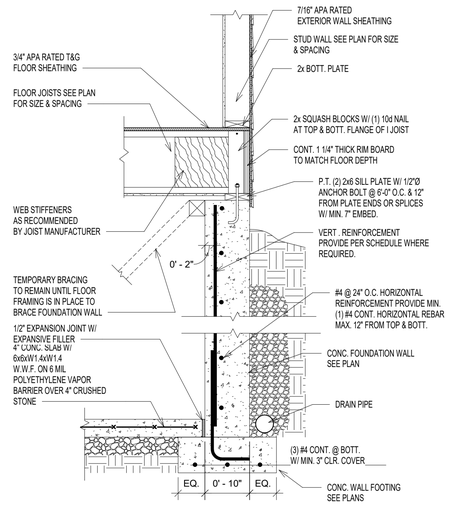

2 SD0.1 TYP. FOUNDATION WALL SECTION
SCALE: 3/4" = 1'-0"

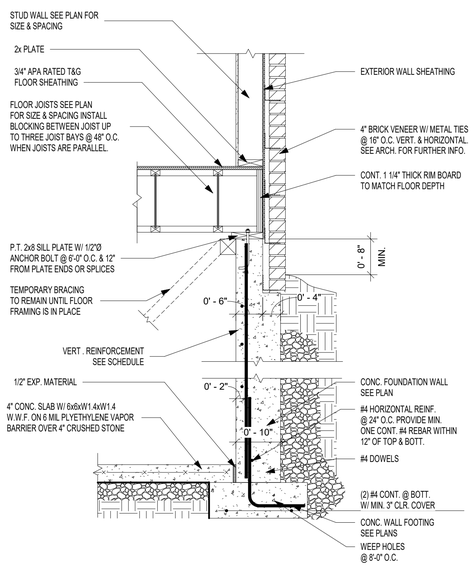

6 SD0.1 FNDN_BSMT_CONC_12_02_I-JOISTS-PERPENDICULAR
SCALE: 3/4" = 1'-0"

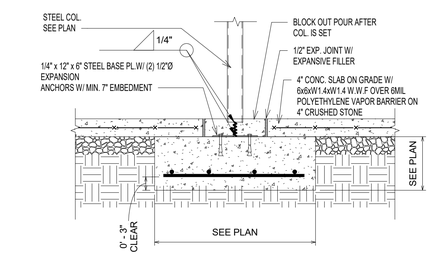

3 SD0.1 ISOLATED COLUMN FOOTING
SCALE: 3/4" = 1'-0"

© COPYRIGHT 2016
Structural Engineering content of this drawings are property of structBIM LLC and are issued for this project only. Any re-use or re-production of these drawings shall not be done without written consent of structBIM LLC. These drawings are to be read in conjuction with project specifications and drawings from other consultants. These drawings shall not be used as shop drawings. Do not scale drawings, use dimensions as specified.

GTM ARCHITECTS

7735 OLD GEORGETOWN ROAD
SUITE 700
BETHESDA, MD 20814
(240)333-2000
(240)333-2001 FAX
WWW.GTMARCHITECTS.COM

GTM

Seal

STATE OF MARYLAND · KEVIN CHARLES KANE · 40082 · PROFESSIONAL ENGINEER

Consultant

structBIM ENGINEERS
WE DESIGN....WE BIM
46400 BENEDICT DR, SUITE #211
PHONE: 703-657-4481
E-MAIL: info@structBIM.com

Project

23 HIGH STREET, LOT 2,
BROOKVILLE, MD

I certify that these documents were prepared or approved by me, and that I am a duly licensed Professional Engineer under the laws of the State of Maryland, license number 40082, Expiration Date: 02-13-2023.

Issue Description	*Date*

structBIM Project No.	21-0244
Checked By	KK
Drawn By	KK
Scale	3/4" = 1'-0"

Sheet Title

FOUNDATION DETAILS

Sheet No.

SD0.1

COPYRIGHT, 2016 structBIMEngineers, LLC.

PLOTTED ON: 4/15/2022 3:02:01 PM

FILE NAME:

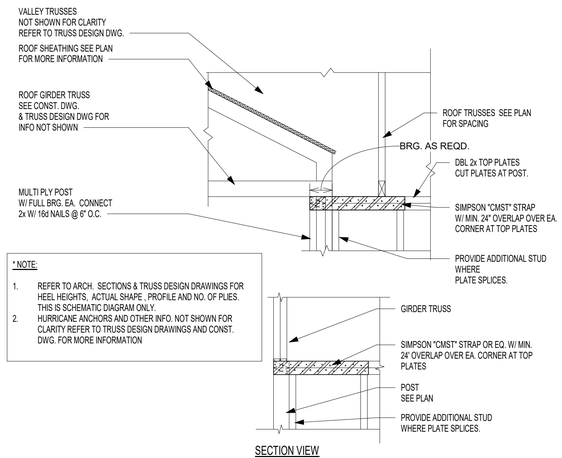

* NOTE:

1. REFER TO ARCH. SECTIONS & TRUSS DESIGN DRAWINGS FOR HEEL HEIGHTS, ACTUAL SHAPE , PROFILE AND NO. OF PLIES. THIS IS SCHEMATIC DIAGRAM ONLY.
2. HURRICANE ANCHORS AND OTHER INFO. NOT SHOWN FOR CLARITY REFER TO TRUSS DESIGN DRAWINGS AND CONST. DWG. FOR MORE INFORMATION

SECTION VIEW

10 / SD1 G.T. W/ FULL BRG ON POST @ CORNER
SCALE: 3/4" = 1'-0"

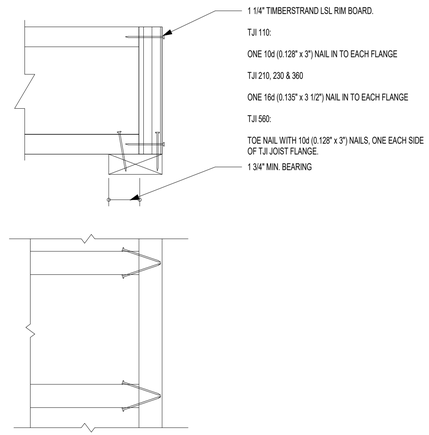

TOP VIEW

7 / SD1 RIM TO TJI JOIST CONNECTION
SCALE: 3/4" = 1'-0"

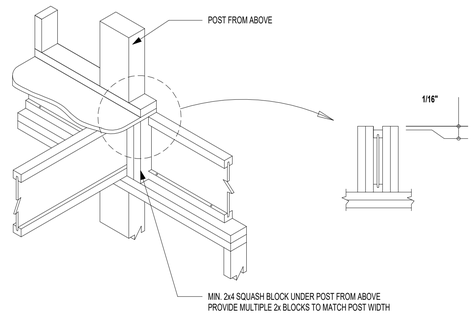

4 / SD1 JOISTS BRG @ EXT. WALL W/ POST ABOVE
SCALE: 3/4" = 1'-0"

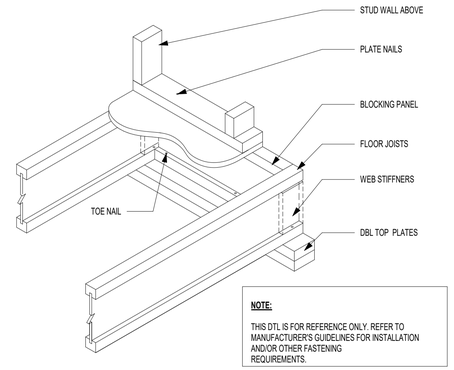

NOTE:

THIS DTL IS FOR REFERENCE ONLY. REFER TO MANUFACTURER'S GUIDELINES FOR INSTALLATION AND/OR OTHER FASTENING REQUIREMENTS.

1 / SD1 I JOIST WITH BRG WALL ABOVE
SCALE: 3/4" = 1'-0"

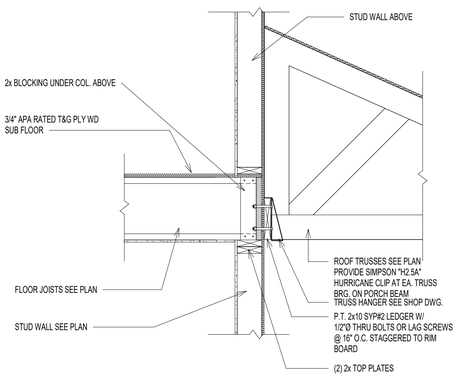

11 / SD1 SECTION @ PORCH
SCALE: 3/4" = 1'-0"

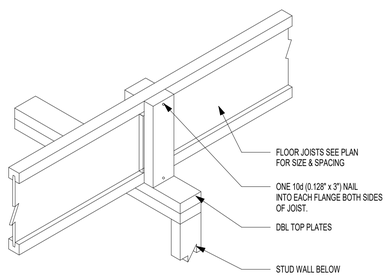

8 / SD1 TYP. SQUASH BLOCKS DETAIL
SCALE: 3/4" = 1'-0"

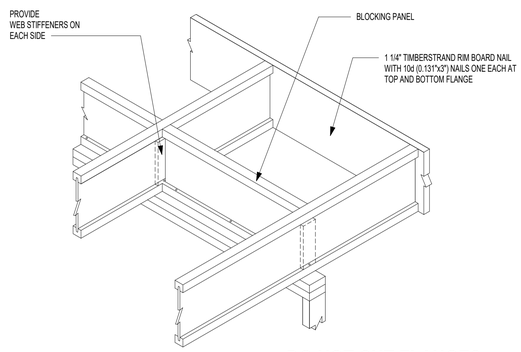

DO NOT CUT FLANGES OR WEB

5 / SD1 CANTILEVER JOIST DETAIL
SCALE: 3/4" = 1'-0"

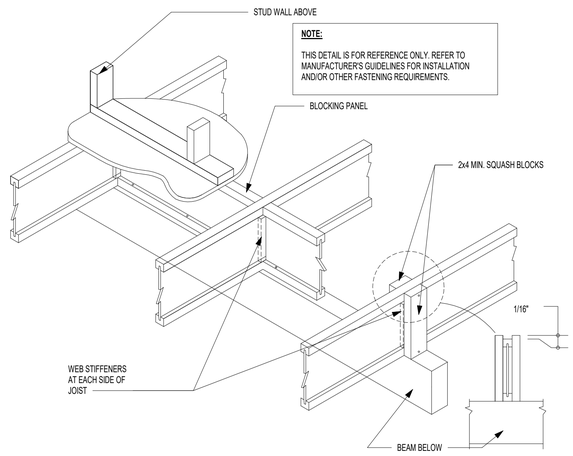

NOTE:

THIS DETAIL IS FOR REFERENCE ONLY. REFER TO MANUFACTURER'S GUIDELINES FOR INSTALLATION AND/OR OTHER FASTENING REQUIREMENTS.

2 / SD1 JOIST W/ INT. BRG. ON BEAM & BRG. WALL FROM ABOVE
SCALE: 3/4" = 1'-0"

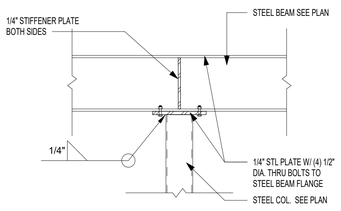

12 / SD1 STEEL BEAM TO STEEL COLUMN - INT. SUPPORT
SCALE: 3/4" = 1'-0"

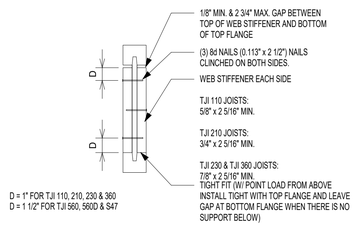

TJI JOIST SERIES	DEPTH	MINIMUM WEB STIFFENER SIZE	NAILING		
			TYPE	END	INTERMEDIATE
110	ALL	5/8" x 2 5/16"	8d (0.113" x 2 1/2")	3	3
210	ALL	3/4" x 2 5/16"			
230 & 360	ALL	7/8" x 2 5/16"			

9 / SD1 TYP. I JOIST WEB STIFFENER SCHEDULE
SCALE: 3/4" = 1'-0"

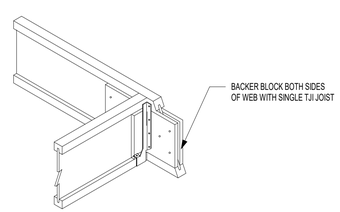

TJI	110		210		230 OR 360		560	
DEPTH	9 1/2" OR 11 7/8"	14"	9 1/2" OR 11 7/8"	14" OR 16"	9 1/2" OR 11 7/8"	14" OR 16"	11 7/8"	14" OR 16"
FILLER BLOCK (1)	2x6	2x8	2x6 + 3/8" SHEATHING	2x8 + 3/8" SHEATHING	2x6 + 1/2" SHEATHING	2x8 + 1/2" SHEATHING	(2) 2x6	(2) 2x8
BACKER BLOCK (1)	5/8" OR 3/4"		3/4" OR 7/8"		7/8" OR 1" NET		2x6	2x8

6 / SD1 SINGLE JOIST TO SINGLE JOIST CONNECTION
SCALE: 3/4" = 1'-0"

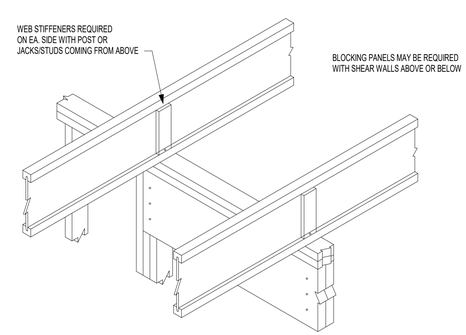

3 / SD1 INTERMEDIATE BEARING
SCALE: 3/4" = 1'-0"

© COPYRIGHT 2016
Structural Engineering content of this drawings are property of structBIM LLC and are issued for this project only. Any re-use or re-production of these drawings shall not be done without written consent of structBIM LLC. These drawings are to be read in conjuction with project specifications and drawings from other consultants. These drawings shall not be used as shop drawings. Do not scale drawings, use dimensions as specified.

GTM ARCHITECTS

7735 OLD GEORGETOWN ROAD
SUITE 700
BETHESDA, MD 20814
(240)333-2000
(240)333-2001 FAX
WWW.GTMARCHITECTS.COM

GTM

Seal

STATE OF MARYLAND
KAMAL KANDIL
40082
PROFESSIONAL ENGINEER

Consultant

structBIM ENGINEERS
WE DESIGN....WE BIM
46400 BENEDICT DR, SUITE #211
PHONE: 703-657-4481
E-MAIL: info@structBIM.com

Project

23 HIGH STREET, LOT 2,
BROOKVILLE, MD

I certify that these documents were prepared or approved by me, and that I am a duly licensed Professional Engineer under the laws of the State of Maryland, license number 40082, Expiration Date: 02-13-2023.

Issue Description	Date

structBIM Project No.	21-0244
Checked By	KK
Drawn By	KK
Scale	3/4" = 1'-0"

Sheet Title

FRAMING DETAILS

Sheet No.

SD1

COPYRIGHT, 2016 structBIMEngineers, LLC.

PLOTTED ON: 4/19/2022 3:02:03 PM

FILE NAME:

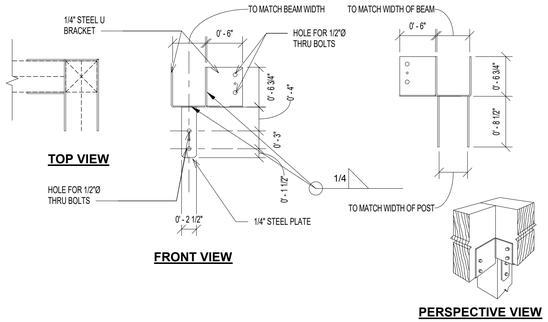

12 SD2 TYPICAL COLUMN CAP DETAIL AT CORNER
SCALE: 1" = 1'-0"

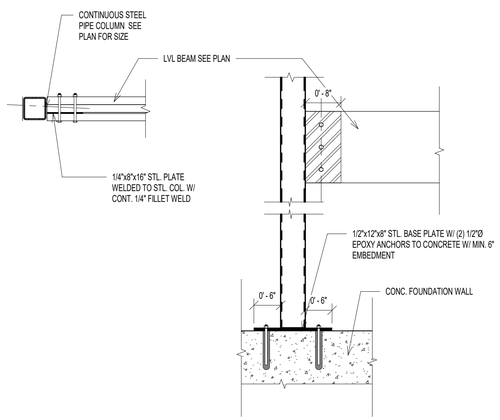

13 SD2 SECTION
SCALE: 3/4" = 1'-0"

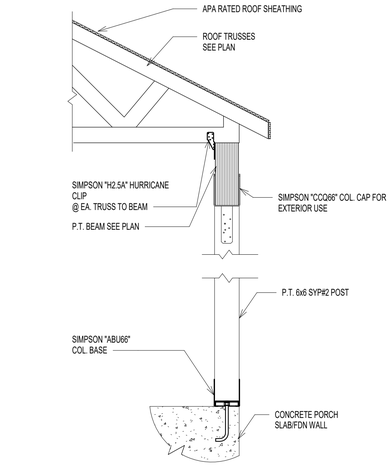

9 SD2 SECTION AT PORCH ROOF
SCALE: 3/4" = 1'-0"

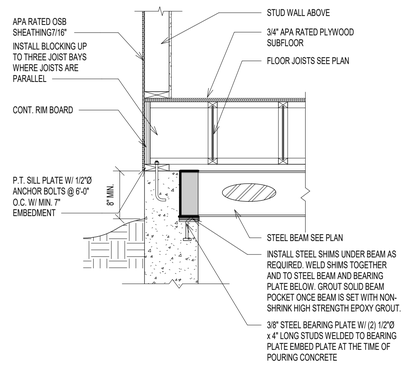

10 SD2 TYP. STEEL BEAM POCKET DETAIL
SCALE: 3/4" = 1'-0"

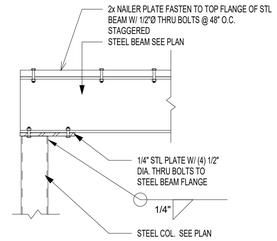

5 SD2 STEEL BEAM TO STEEL COLUMN - END SUPPORT
SCALE: 3/4" = 1'-0"

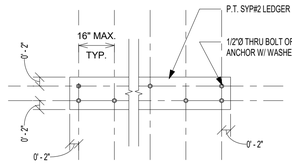

6 SD2 TYP. DECK CONNECTION DETAIL
SCALE: 3/4" = 1'-0"

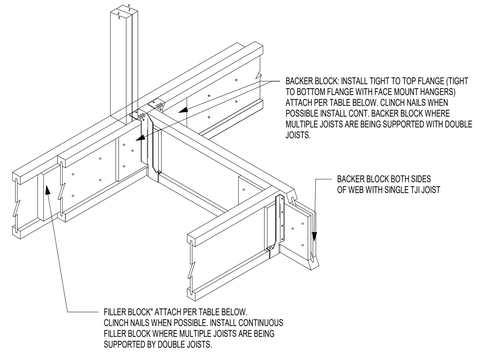

TJI	110		210		230 OR 360		560	
DEPTH	9 1/2" OR 11 7/8"	14"	9 1/2" OR 11 7/8"	14" OR 16"	9 1/2" OR 11 7/8"	14" OR 16"	11 7/8"	14" OR 16"
FILLER BLOCK (1)	2x6	2x8	2x6 + 3/8" SHEATHING	2x8 + 3/8" SHEATHING	2x6 + 1/2" SHEATHING	2x8 + 1/2" SHEATHING	(2) 2x6	(2) 2x8
BACKER BLOCK (1)	5/8" OR 3/4"		3/4" OR 7/8"		7/8" OR 1" NET		2x6	2x8

7 SD2 TYPICAL DBL JOISTS CONNECTION W/ JOIST SUPPORTED
SCALE: 3/4" = 1'-0"

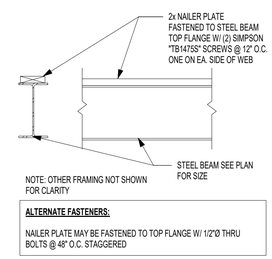

1 SD2 TYP. STEEL BEAM NAILER PLATE CONNECTION
SCALE: 3/4" = 1'-0"

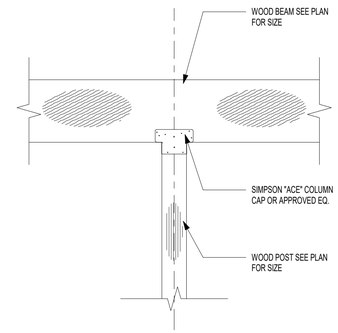

2 SD2 INTERIOR POST W/ COL. CAP CONN.
SCALE: 3/4" = 1'-0"

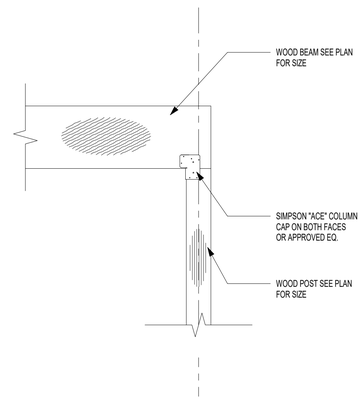

3 SD2 END COL. TO BEAM BEARING CONNECTION
SCALE: 3/4" = 1'-0"

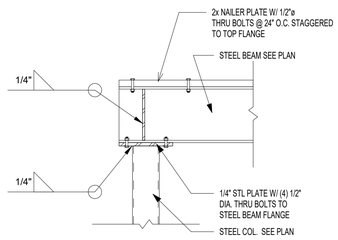

11 SD2 SECTION
SCALE: 3/4" = 1'-0"

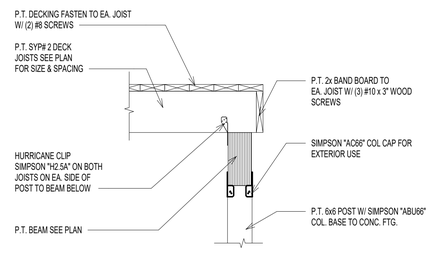

8 SD2 TYP. DECK POST CONNECTION W/ POST FROM ABOVE
SCALE: 3/4" = 1'-0"

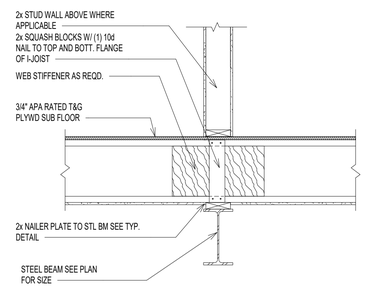

4 SD2 TYP. JOIST BEARING ON STEEL BEAM
SCALE: 3/4" = 1'-0"

© COPYRIGHT 2016
Structural Engineering content of this drawings are property of structBIM LLC and are issued for this project only. Any re-use or re-production of these drawings shall not be done without written consent of structBIM LLC. These drawings are to be read in conjuction with project specifications and drawings from other consultants. These drawings shall not be used as shop drawings. Do not scale drawings, use dimensions as specified.

GTM ARCHITECTS
7735 OLD GEORGETOWN ROAD
SUITE 700
BETHESDA, MD 20814
(240)333-2000
(240)333-2001 FAX
WWW.GTMARCHITECTS.COM
GTM

Seal

Consultant

structBIM ENGINEERS
WE DESIGN....WE BIM
46400 BENEDICT DR, SUITE #211
PHONE: 703-657-4481
E-MAIL: info@structBIM.com

Project

23 HIGH STREET, LOT 2,
BROOKVILLE, MD

I certify that these documents were prepared or approved by me, and that I am a duly licensed Professional Engineer under the laws of the State of Maryland, license number 40082, Expiration Date: 02-13-2023.

Issue Description	Date

structBIM Project No.	21-0244
Checked By	KK
Drawn By	KK
Scale	As indicated

Sheet Title
FRAMING DETAILS

Sheet No.
SD2

COPYRIGHT, 2016 structBIMEngineers, LLC.
PLOTTED ON: 4/15/2022 3:02:56 PM

FILE NAME:

Point Load Connector Spacing
8- Screw Connection

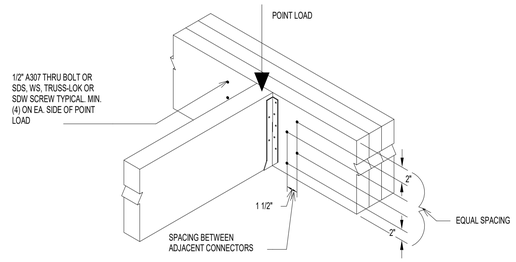

2 / SD3 LVL BEAM CONNECTION AT POINT LOAD
SCALE: 3/4" = 1'-0"

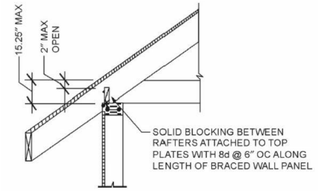

3 / SD3 TYPICAL ROOF BEARING @ BRACED WALL PANEL
SCALE: 3/4" = 1'-0"

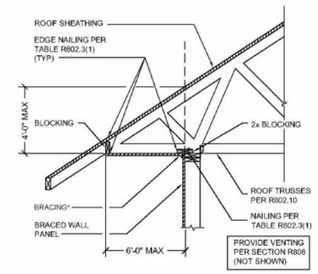

4 / SD3 TYPICAL ROOF BEARING @ BRACED WALL PANEL
SCALE: 3/4" = 1'-0"

ALLOWABLE HOLES

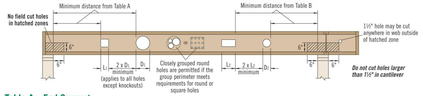

Table A—End Support

Minimum distance from edge of hole to inside face of nearest end support

Depth	TJI®	Round Hole Size 2"	3"	4"	5"	6½"	7"	8½"	11"	13"	Square or Rectangular Hole Size 2"	3"	4"	5"	6½"	7"	8½"	11"	13"
9½"	110	1'-0"	1'-0"	1'-0"	2'-0"	3'-0"					1'-0"	1'-0"	2'-0"	3'-0"	4'-0"				
	210	1'-0"	1'-0"	1'-0"	3'-0"	5'-0"					1'-0"	1'-0"	2'-0"	4'-0"	5'-0"				
	230	1'-0"	1'-0"	1'-0"	3'-0"	5'-0"					1'-0"	1'-0"	2'-0"	4'-0"	5'-0"				
11⅞"	110	1'-0"	1'-0"	1'-0"	1'-0"	2'-0"	2'-0"	5'-0"			1'-0"	1'-0"	1'-0"	2'-0"	4'-0"	4'-0"	6'-0"		
	210	1'-0"	1'-0"	1'-0"	1'-0"	2'-0"	3'-0"	5'-0"			1'-0"	1'-0"	2'-0"	3'-0"	5'-0"	5'-0"	6'-0"		
	230	1'-0"	1'-0"	1'-0"	2'-0"	3'-0"	5'-0"	6'-0"			1'-0"	1'-0"	2'-0"	3'-0"	5'-0"	5'-0"	7'-0"		
	360	1'-0"	1'-0"	1'-0"	2'-0"	4'-0"	5'-0"	7'-0"			1'-0"	1'-0"	2'-0"	4'-0"	6'-0"	6'-0"	7'-0"		
	560	1'-0"	1'-0"	1'-0"	3'-0"	5'-0"	6'-0"	8'-0"			1'-0"	1'-0"	2'-0"	4'-0"	6'-0"	7'-0"	8'-0"		
14"	110	1'-0"	1'-0"	1'-0"	1'-0"	1'-0"	1'-0"	2'-0"	5'-0"		1'-0"	1'-0"	1'-0"	1'-0"	2'-0"	3'-0"	4'-0"	6'-0"	8'-0"
	210	1'-0"	1'-0"	1'-0"	1'-0"	1'-0"	1'-0"	2'-0"	6'-0"		1'-0"	1'-0"	1'-0"	2'-0"	4'-0"	4'-0"	6'-0"	8'-0"	
	230	1'-0"	1'-0"	1'-0"	1'-0"	1'-0"	1'-0"	2'-0"	6'-0"		1'-0"	1'-0"	1'-0"	2'-0"	4'-0"	5'-0"	7'-0"	9'-0"	
	360	1'-0"	1'-0"	1'-0"	1'-0"	2'-0"	3'-0"	5'-0"	8'-0"		1'-0"	1'-0"	1'-0"	2'-0"	5'-0"	6'-0"	8'-0"	9'-0"	
	560	1'-0"	1'-0"	1'-0"	1'-0"	2'-0"	3'-0"	6'-0"	9'-0"		1'-0"	1'-0"	1'-0"	3'-0"	6'-0"	7'-0"	9'-0"	10'-0"	
16"	210	1'-0"	1'-0"	1'-0"	1'-0"	1'-0"	1'-0"	2'-0"	3'-0"	6'-0"	1'-0"	1'-0"	1'-0"	1'-0"	2'-0"	2'-0"	3'-0"	6'-0"	8'-0"
	230	1'-0"	1'-0"	1'-0"	1'-0"	1'-0"	1'-0"	2'-0"	4'-0"	6'-0"	1'-0"	1'-0"	1'-0"	1'-0"	2'-0"	3'-0"	4'-0"	7'-0"	9'-0"
	360	1'-0"	1'-0"	1'-0"	1'-0"	1'-0"	2'-0"	3'-0"	6'-0"	9'-0"	1'-0"	1'-0"	1'-0"	1'-0"	3'-0"	3'-0"	5'-0"	9'-0"	11'-0"
	560	1'-0"	1'-0"	1'-0"	1'-0"	1'-0"	2'-0"	4'-0"	6'-0"	10'-0"	1'-0"	1'-0"	1'-0"	1'-0"	3'-0"	4'-0"	5'-0"	10'-0"	11'-0"
	560	1'-0"	1'-0"	1'-0"	1'-0"	1'-0"	2'-0"	4'-0"	7'-0"	10'-0"	1'-0"	1'-0"	1'-0"	1'-0"	3'-0"	4'-0"	5'-0"	10'-0"	12'-0"

Table B—Intermediate or Cantilever Support

Minimum distance from edge of hole to inside face of nearest intermediate or cantilever support

Depth	TJI®	Round Hole Size 2"	3"	4"	5"	6½"	7"	8½"	11"	13"	Square or Rectangular Hole Size 2"	3"	4"	5"	6½"	7"	8½"	11"	13"
9½"	110	1'-0"	2'-0"	3'-0"	4'-0"	7'-0"					1'-0"	2'-0"	3'-0"	5'-0"	6'-0"				
	210	2'-0"	2'-0"	3'-0"	6'-0"	7'-0"					2'-0"	3'-0"	6'-0"	6'-0"	7'-0"				
	230	2'-0"	3'-0"	4'-0"	5'-0"	8'-0"					2'-0"	3'-0"	4'-0"	6'-0"	7'-0"				
11⅞"	110	1'-0"	1'-0"	1'-0"	2'-0"	4'-0"	4'-0"	8'-0"			1'-0"	1'-0"	2'-0"	4'-0"	6'-0"	7'-0"	9'-0"		
	210	1'-0"	1'-0"	2'-0"	3'-0"	4'-0"	5'-0"	9'-0"			1'-0"	2'-0"	3'-0"	4'-0"	7'-0"	8'-0"	10'-0"		
	230	1'-0"	2'-0"	2'-0"	3'-0"	5'-0"	5'-0"	9'-0"			1'-0"	2'-0"	3'-0"	5'-0"	8'-0"	8'-0"	10'-0"		
	360	2'-0"	3'-0"	4'-0"	5'-0"	7'-0"	7'-0"	11'-0"			2'-0"	3'-0"	5'-0"	7'-0"	9'-0"	9'-0"	11'-0"		
	560	1'-0"	3'-0"	4'-0"	5'-0"	8'-0"	8'-0"	12'-0"			3'-0"	4'-0"	6'-0"	8'-0"	10'-0"	11'-0"	12'-0"		
14"	110	1'-0"	1'-0"	1'-0"	1'-0"	2'-0"	2'-0"	4'-0"	8'-0"		1'-0"	1'-0"	1'-0"	2'-0"	5'-0"	5'-0"	9'-0"	12'-0"	
	210	1'-0"	1'-0"	1'-0"	1'-0"	2'-0"	3'-0"	5'-0"	9'-0"		1'-0"	1'-0"	2'-0"	3'-0"	6'-0"	7'-0"	10'-0"	12'-0"	
	230	1'-0"	1'-0"	1'-0"	1'-0"	2'-0"	3'-0"	5'-0"	10'-0"		1'-0"	1'-0"	2'-0"	4'-0"	6'-0"	7'-0"	10'-0"	13'-0"	
	360	1'-0"	1'-0"	1'-0"	2'-0"	3'-0"	4'-0"	6'-0"	12'-0"		1'-0"	2'-0"	4'-0"	5'-0"	7'-0"	10'-0"	12'-0"	14'-0"	
	560	1'-0"	1'-0"	1'-0"	3'-0"	5'-0"	6'-0"	9'-0"	13'-0"		1'-0"	1'-0"	5'-0"	7'-0"	10'-0"	11'-0"	13'-0"	15'-0"	
16"	210	1'-0"	1'-0"	1'-0"	1'-0"	1'-0"	2'-0"	3'-0"	6'-0"		1'-0"	1'-0"	1'-0"	2'-0"	4'-0"	5'-0"	6'-0"	13'-0"	15'-0"
	230	1'-0"	1'-0"	1'-0"	1'-0"	1'-0"	2'-0"	4'-0"	6'-0"	10'-0"	1'-0"	1'-0"	1'-0"	2'-0"	4'-0"	5'-0"	6'-0"	10'-0"	13'-0"
	360	1'-0"	1'-0"	1'-0"	1'-0"	2'-0"	4'-0"	6'-0"	10'-0"	13'-0"	1'-0"	1'-0"	2'-0"	4'-0"	7'-0"	8'-0"	13'-0"	14'-0"	17'-0"
	560	1'-0"	1'-0"	1'-0"	1'-0"	2'-0"	3'-0"	7'-0"	11'-0"	15'-0"	1'-0"	1'-0"	3'-0"	5'-0"	9'-0"	10'-0"	14'-0"	16'-0"	18'-0"

• Rectangular holes based on measurement of longest side.

How to Use These Tables

1. Using **Table A**, **Table B**, or both if required, determine the hole shape/size and select the TJI® joist and depth.
2. Scan horizontally until you intersect the correct hole size column.
3. Measurement shown is minimum distance from edge of hole to support.
4. Maintain the required minimum distance from the end **and** the intermediate or cantilever support.

General Notes

- Holes may be located vertically anywhere within the web. Leave ¼" of web (minimum) at top and bottom of hole.
- Knockouts are located in web at approximately 12" on-center; they do not affect hole placement.
- For simple span (5' minimum) uniformly loaded joists meeting the requirements of this guide, one maximum size round hole may be located at the center of the joist span **provided that no other holes occur in the joist.**
- Distances are based on the maximum uniform loads shown in this guide. For other load conditions or hole configurations, use Forte™ software or contact your iLevel representative.

1 / SD3 TYPICAL ALLOWABLE HOLE SIZES FOR I JOISTS
SCALE: 3/4" = 1'-0"

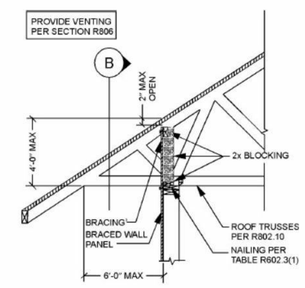

A SECTION

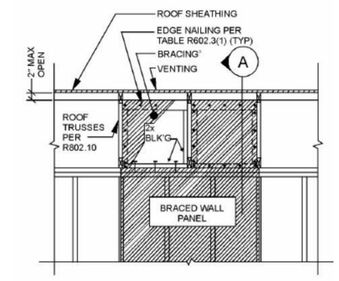

B ELEVATION

5 / SD3 TYPICAL ROOF BEARING @ BRACED WALL PANEL
SCALE: 3/4" = 1'-0"

ASSEMBLY	A	B	C	D	E	F
SKETCH	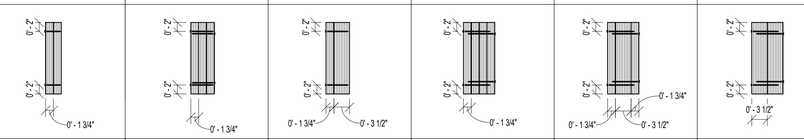					
FASTNER	SIMPSON - SDW22 x 3 5/8"	SIMPSON - SDW22 x 5"	SIMPSON - SDW22 x 5"	SIMPSON - SDW22 x 6 3/4"	SIMPSON - SDW22 x 6 3/4"	SIMPSON - SDW22 x 6 3/4"
SPACING	12" O.C.	12" O.C.	12" O.C.	12" O.C.	12" O.C.	12" O.C.
NOTE		INSTALL FASTNERS FROM BOTH SIDES STAGGER BY 3" FASTENERS FROM OPPOSITE SIDES		INSTALL FASTNERS FROM BOTH SIDES STAGGER BY 3" FASTENERS FROM OPPOSITE SIDES	INSTALL FASTNERS FROM BOTH SIDES STAGGER BY 3" FASTENERS FROM OPPOSITE SIDES	INSTALL FASTNERS FROM BOTH SIDES STAGGER BY 3" FASTENERS FROM OPPOSITE SIDES

NOTES:

1. CONTACT ENGINEER FOR ALTERNATE FASTENERS IF NEEDED.
2. NOTIFY ENGINEER IF POINT LOAD IS APPLIED ON LVL BEAMS. INSTALL MIN. 8 FASTENERS ON EITHER SIDE OF POINT LOAD WITH 2" SPACING.
3. MAINTAIN MINIMUM EDGE DISTANCE OF 6" FROM ENDS.

2A / SD3 TYP. LVL PLY CONNECTION DETAIL
SCALE: 3/4" = 1'-0"

© COPYRIGHT 2016
Structural Engineering content of this drawings are property of structBIM LLC and are issued for this project only. Any re-use or re-production of these drawings shall not be done without written consent of structBIM LLC. These drawings are to be read in conjuction with project specifications and drawings from other consultants. These drawings shall not be used as shop drawings. Do not scale drawings, use dimensions as specified.

GTM ARCHITECTS

7735 OLD GEORGETOWN ROAD
SUITE 700
BETHESDA, MD 20814
(240)333-2000
(240)333-2001 FAX
WWW.GTMARCHITECTS.COM

Seal

Consultant

structBIM ENGINEERS
WE DESIGN....WE BIM
46400 BENEDICT DR, SUITE #211
PHONE: 703-657-4481
E-MAIL: info@structBIM.com

Project

23 HIGH STREET, LOT 2,
BROOKVILLE, MD

I certify that these documents were prepared or approved by me, and that I am a duly licensed Professional Engineer under the laws of the State of Maryland, license number 40082, Expiration Date: 02-13-2023.

Issue Description	*Date*

structBIM Project No.	21-0244
Checked By	KK
Drawn By	KK
Scale	3/4" = 1'-0"

Sheet Title

FRAMING DETAILS

Sheet No.

SD3

COPYRIGHT, 2016 structBIMEngineers, LLC.

PLOTTED ON: 4/15/2022 3:02:09 PM

FILE NAME:

STANDARDS AND CODES:

- DESIGN BUILDING CODE: INTERNATIONAL RESIDENTIAL CODE 2015 EDITION, STATE OR LOCAL JURISDICTION AMENDMENTS AND/OR ORDINANCES.
- IN ADDITION TO THE REQUIREMENTS INCLUDED IN THESE PROJECT, ALL CONSTRUCTION AND MATERIAL SHALL FURTHER CONFORM TO THE APPLICABLE PROVISIONS FROM LATEST EDITION OF FOLLOWING STANDARDS/CODES AS REQUIRED BY GOVERNING CODE OR LOCAL JURISDICTION.
- ACI (AMERICAN CONCRETE INSTITUTE)-318: BUILDING CODE REQUIREMENTS FOR STRUCTURAL CONCRETE..
- ACI-332: CODE REQUIREMENTS FOR RESIDENTIAL CONCRETE CONSTRUCTION
- ACI-530: BUILDING CODE REQUIREMENTS FOR MASONRY STRUCTURES
- AISC (AMERICAN INSTITUTE OF STEEL CONSTRUCTION): STEEL CONSTRUCTION MANUAL.
- NDS: NATIONAL DESIGN SPECIFICATIONS (NOS) FOR WOOD CONSTRUCTOIN WITH SUPPLEMENT.
- WFCM: WOOD FRAME CONSTRUCTION MANUAL FOR ONE- AND TWO- FAMILY DWELLINGS.
- AFPA: AMERICAN FOREST AND PAPER ASSOCIATOIN - SPAN TABLE FOR JOISTS AND RAFTERS.
- AISI S100: NORTH AMERICAN SPECIFICATION FOR THE DESIGN OF COLD FORMED STEEL STRUCTURAL MEMBERS.
- AISI S230: STANDARD FOR COLD-FORMED STEEL FRAMING-PRESCRIPTIVE METHOD FOR ONE- AND TWO-FAMILY DWELLINGS.
- AMERICAN INSTITUTE OF TIMBER CONSTRUCTION (AITC).
- AMERICAN NATIONAL STANDARDS INSTITUTE (ANSI).
- APA (AMERICAN PLYWOOD ASSOCIATION) E30: ENGINEERED WOOD CONSTRUCTION GUIDE
- ASCE - 5 (AMERICAN SOCIETY OF CIVIL ENGINEERS): BUILDING CODE REQUIREMENTS FOR MASONRY STRUCTURES.
- ASCE-6: SPECIFICATIONS FOR MASONRY STRUCTURES.
- ASCE-7: MINIMUM DESIGN LOADS FOR BUILDING AND OTHER STRUCTURES.
- AMERICAN WOOD COUNCIL (AWC).
- AMERICAN SOCIETY FOR TESTING AND MATERIALS (ASTM).
- AMERICAN WOOD PROTECTION ASSOCIATION (AWPA).
- AMERICAN WELDING SOCIETY (AWS).
- FEDERAL EMERGENCY MANAGEMENT AGENCY (FEMA).
- GYPSUM ASSOCIATION (GA).
- NATIONAL CONCRETE MASONRY ASSOCIATION (NCMA).
- SSPC: STEEL STRUCTURES PAINTING COUNCIL.
- TPI-I: NATOINAL DESIGN STANDARDS FOR METAL-PLATE-CONNECTED WOOD TRUSS CONSTRUCTION.

DESIGN LOADS:

DESCRIPTION	DEAD LOAD	LIVE LOAD	SNOW LOAD (b)
ROOF	17 PSF	-	30 PSF
FLOOR	15 PSF	40 PSF	-
ATTIC W/OUT STORAGE	10 PSF	10 PSF	-
ATTIC W/ LIMITED STORAGE	10 PSF	20 PSF	-
HABITABLE ATTICS & ATTICS W/ FIXED STAIR	10 PSF	30 PSF	-
SLEEPING ROOMS	10 PSF	30 PSF	-
BALCONIES & DECKS	10 PSF	40 PSF	-
STAIRS	10 PSF	40 PSF	-
GUARD RAILS & HAND RAILS	-	200 LBS (c)	-

WIND LOAD:

- WIND SPEED (ULTIMATE): 115 MPH
- WIND PRESSURE: 18 PSF (f)
- WIND EXPOSURE CATEGORY: B

FOUNDATION DESIGN LOADS:

- SOIL BEARING CAPACITY (g): 2000 PSF
- LATERAL EARTH PRESSURE: 60 PSF/FT

EARTHQUAKE LOADS:

- SEISMIC DESIGN CATEGORY: B
- SITE CLASS: B

NOTES:

a. REFER TO IRC TABLE R301.5 FOR MORE INFORMATION.
b. SNOW LOAD SPECIFIED IS GROUND SNOW LOAD ONLY.
c. A SINGLE CONCENTRATED LOAD APPLIED IN ANY DIRECTION AT ANY POINT ALONG THE TOP.
d. MECHANICAL EQUIPMENT LOADS IN EXCESS OF 200 LBS SHALL BE NOTIFIED TO STRUCTURAL ENGINEER.
e. PRE-FABRICATED STRUCTURAL COMPONENT SHALL COMPLY WITH DESIGN LOADS FROM APPLICABLE CODES/STANDARDS IN ADDITION TO LOADS SPECIFIED IN THESE NOTES.
f. WIND PRESSURE SPECIFIED IS FOR MAIN WIND FORCE RESISTING SYSTEM ONLY. WIND PRESSURE & LOADS FOR STRUCTURAL COMPONENTS AND CLADDING SHALL BE DETERMINED BY RESPECTIVE REGISTERED DESIGN PROFESSIONAL PER APPLICABLE STANDARDS/CODES.
g. SOIL BEARING CAPACITY IS ASSUMED UNLESS GEOTECHNICAL REPORT IS PROVIDED PER SITE WORK SECTION.

DEFLECTION CRITERIA:

DESCRIPTION	TOTAL LOAD	LIVE LOAD
ROOF TRUSSES/RAFTERS/CEILING JOISTS	L/240	L/360 OR 1/2" MAX.
FLOOR JOISTS/FLOOR TRUSSES	L/240	L/480 OR 1/2" MAX.
MEMBERS SUPPORTING BRICK/ HORIZONTAL MASONRY MEMBERS	L/600 OR 0.3" MAX.	
JOISTS/TRUSSES SUPPORTING CERAMIC TILE	L/720	

SITE WORK:

- GEOTECHNICAL REPORT WAS NOT PROVIDED AND FOUNDATION DESIGN IS BASED ON ASSUMED SOIL DESIGN CRITERIA AND SHALL BE FIELD VERIFIED.
- BOTTOM OF ALL EXTERIOR FOOTING SHALL BE MINIMUM FROST DEPTH OF 30 INCHES BELOW GRADE OR AS REQUIRED BY GOVERNING AUTHORITY OR CODE, AND SHALL PROJECT 12" IN TO UNDISTURBED VIRGIN SOIL OR ENGINEERED FILL.
- SOIL BEARING CAPACITY SHALL BE VERIFIED ON-SITE BY GEOTECHNICAL ENGINEER.
- ALL BEARING STRATA SHALL BE ADEQUATELY DRAINED PRIOR TO PLACING FOUNDATION CONCRETE.
- THE SIDES OF FOOTINGS MAY BE EARTH-FORMED IF THE EXCAVATION CAN BE KEPT VERTICAL CLEAN AND STABLE. OTHERWISE FORMS MUST BE USED.
- UNBRACED EXCAVATIONS SHALL BE SLOPED NO GRATER THAN 2:1.
- NO EXCAVATION SHALL BE CLOSER THAN ATLEAST A SLOPE OF 2:1 TO THE UNDERSIDE OF ANY EXISTING OR NEW FOOTING WITHOUT THE WRITTEN AND CERTIFIED PERMISSION FROM GEOTECHNICAL ENGINEER.
- STEP FOOTINGS SHALL BE PROVIDED WITH A RATIO OF 2:1.
- FOUNDATION ELEMENTS THAT ARE TO SUPPORT FILL ON BOTH SIDES SHALL BE BACKFILLED SIMULTANEOUSLY AND UNIFORMLY ON BOTH SIDES.
- FOUNDATION ELEMENTS THAT ARE TO SUPPORT FILL ON ONE SIDE ONLY SHALL BE PROPERLY BRACED BY PERMANENT STRUCTURAL ELEMENTS PRIOR TO BACKFILLING. PROVIDE TEMPORARY BRACING AS REQUIRED UNTIL PERMANENT BRACING IN PLACE AND FOUNDATION WALL ACHIEVES DESIRED STRENGTH.
- ENGINEERED FILLS HALL BE PLACED IN 8" MAXIMUM HEIGHT LOOSE LIFTS AND COMPACTED TO 95% OF MAXIMUM DRY DENSITY AT OPTIMUM MOISTURE CONTENT AS ESTABLISHED BY ASTM D-698.
- NO PORTION OF THE STRUCTURAL DRAWINGS SHALL BE USED AS SHOP DRAWINGS. CONTRACTOR IS RESPONSIBLE FOR FURNISHING SHOP DRAWINGS AND SHALL SUBMIT TO ENGINEER OF RECORD FOR REVIEW.
- PROVIDE SHORING AND PROTECTION FOR EXCAVATION BANKS AS NECESSARY TO AVOID CAVING
- PROVIDE 6 MIL POLYETHYLENE VAPOR VARIOUS UNDER SLAB ON GRADE OR AS RECOMMENDED BY GEOTECHNICAL ENGINEER.
- ALL RECOMMENDATIONS SPECIFIED IN GEOTECHNICAL REPORT SHALL BE FOLLOWED ALL THE TIME AND SHALL GOVERN.

FILE NAME:

GENERAL

- STRUCTURAL ENGINEERING DRAWINGS PREPARED IN THIS SET ARE BASED ON ARCHITECTURAL DRAWINGS AND PROVIDED INFORMATION AND SHALL BE READ IN CONJUNCTION WITH ARCHITECTURAL DRAWINGS.
- DETAILS, SECTIONS AND NOTES SHOWN ON THESE DRAWINGS ARE INTENDED TO BE TYPICAL AND SHALL BE APPLY TO SIMILAR CONDITIONS ELSEWHERE OTHERWISE SHOWN OR NOTED.
- THE STRUCTURAL INTEGRITY OF THE BUILDING IS DEPENDENT UPON COMPLETION OF WORK ACCORDING TO CONTRACT DRAWINGS AND SPECIFICATIONS. THE STRUCTURAL ENGINEER ASSUMES NO LIABILITY FOR THE STRUCTURE DURING CONSTRUCTION. THE METHODS OF CONSTRUCTION AND SEQUENCE OF OPERATIONS IS THE SOLE RESPONSIBILITY OF OWNER/CONTRACTOR.
- TEMPORARY BRACING AND SHORING SHALL BE RESPONSIBILITY OF CONTRACTOR AND SHALL BE DESIGNED BY SPECIALITY ENGINEER PER APPLICABLE CODES/STANDARDS TO ENSURE VERTICAL AND LATERAL STABILITY OF THE STRUCTURE OR PORTION THEREOF DURING THE CONSTRUCTION.
- THE CONTRACTOR SHALL BE RESPONSIBLE FOR PROVIDING NECESSARY UNDERPINNING OR BRACING FOR EXISTING STRUCTURE OR PORTION THEREOF. STRUCTURAL ENGINEER IS NOT RESPONSIBLE FOR ANY DESIGN OR PROVISIONS OF ANY TEMPORARY STRUCTURES.
- DO NOT CHANGE SIZE OR DIMENSIONS OF STRUCTURAL ELEMENTS WITHOUT WRITTEN PERMISSION FROM STRUCTURAL ENGINEER.
- DO NOT SCALE THE DRAWINGS, USE DIMENSIONS SHOWN. COORDINATE AND VERIFY ALL DIMENSIONS WITH ARCHITECTURAL DRAWINGS. ARCHITECTURAL DRAWINGS SUPERCEDES ALL DIMENSIONS SHOWN IN THESE DRAWINGS.
- GENERAL CONTRACTOR IS RESPONSIBLE TO PERFORM ALL NECESSARY TESTINGS PER GOVERNING ASTM STANDARDS FOR SOIL, CONCRETE OR ANY OTHER MATERIALS INVOLVED IN THE PROJECT AND SHOP DRAWINGS OF SUCH DESIGN OR REPORTS OF TESTING SHALL BE SUBMITTED TO ARCHITECT/ENGINEER FOR RECORD AND APPROVAL. ALL SUCH DESIGN OR TEST RESULTS SHALL BE SIGNED AND SEALED BY LICENSED PROFESSIONAL IN STATE OR JURISDICTION WHERE THE PROJECT IS LOCATED.

CAST-IN-PLACE CONCRETE:

- CONCRETE DESIGN AND DETAILING SHALL CONFORM TO THE REQUIREMENTS OF ACI 318 AND ACI 301, LATEST EDITIONS. CONTRACTOR SHALL SUBMIT MIX DESIGNS ACCOMPANIED BY APPROPRIATE GRAPHS AND BACKGROUND DATA FOR APPROVAL. MIX DESIGN SHALL INDICATE 7 AND 28 DAYS STRENGTHS, CEMENT CONTENT, AIR CONTENT, WATER-CEMENT RATIO, AMOUNT OF FINE AND COARSE AGGREGATES, AND ADMIXTURES.
- ALL REINFORCING STEEL SHALL BE DEFORMED BILLET STEEL CONFORMING TO ASTM A615 GRADE 60 AND DETAILED, FABRICATED AND PLACED CONFORMING TO MANUAL OF STANDARD PRACTICE FOR DETAILING CONCRETE STRUCTURES (ACI 315)
- ALL WELDED WIRE FABRIC SHALL CONFORM TO ASTM A185. ALL MESH EDGES SHALL LAP A MIN. OF 2 SQUARES.
- CONCRETE COMPRESSIVE STRENGTHS AT 28 DAYS SHALL BE 3000 psi FOR FOOTINGS, FOUNDATION WALLS AND SLAB ON GRADE IN ENCLOSED SPACES & 3500 psi FOR HORIZONTAL SURFACES EXPOSED TO WEATHER.
- SLUMP AT THE POINT OF DISCHARGE IN TO THE FORMS SHALL BE 4" +/- 1" FOR VERTICAL ELEMENTS AND 6" +/- 1" FOR HORIZONTAL ELEMENTS.
- CAST-IN-PLACE CONCRETE SHALL BE READY-MIX PER ASTM C94.
- ALL CONCRETE EXPOSED TO WEATHER SHALL HAVE A MIN. AIR ENTRAINMENT OF 6% +/- 1% PER ACI 318-08; SECTION: 4.4.1.
- PROVIDE CORNER BARS AT ALL WALL AND FOOTING INTERSECTIONS AND MATCH CONTINUING REINFORCEMENT.
- SEE ARCHITECTURAL DRAWINGS FOR NECESSARY CONCRETE FINISHES.
- RESTRICT ADDITION OF MIX WATER AT THE JOB SITE. DO NOT ADD WATER WITHOUT APPROVAL OF THE INSPECTIONS ENGINEER AND DO NOT EXCEED SLUMP LIMITATIONS.
- ALL GROUTS SHALL BE PRE-MIXED NON-SHRINKABLE, NON-METALLIC FORMULA PRO CONFORMING TO ASTMC827, AND SHALL HAVE A SPECIFIED COMPRESSIVE STRENGTH OF 3000 psi WITHIN 24 HOURS AND 6000 psi AT 28 DAYS. PRE-GROUTING OF BASE PLATES WILL NOT BE PERMITTED.
- PROVIDE KEYED JOINTS BETWEEN ALL NON-MONOLITHIC INTERSECTING CONCRETE ELEMENTS AND JOINTS.
- CONTRACTOR SHALL VERIFY EMBEDDED ITEMS, INCLUDING BUT NOT LIMITED TO ANCHOR BOLTS, BOLT CLUSTERS, WELD PLATES etc. BEFORE PLACING CONCRETE. NOTIFY ENGINEER OF ANY CONFLICTS WITH REBAR.
- CONCRETE EXPOSED TO WEATHER SHALL BE AIR ENTRAINED. TOTAL AIR CONTENT (BY PERCENT OF CONCRETE VOLUME) SHALL BE NOT LESS THAN 5% OR MORE THAN 7%.
- GENERAL CONTRACTOR IS RESPONSIBLE FOR SUBMITTING SHOP DRAWINGS SIGNED AND SEALED BY REGISTERED DESIGN PROFESSIONAL THAT INCLUDES: 1. CONCRETE MIX DESIGN 2. DETAILED REINFORCEMENT SHOP DRAWINGS PER ACI 318 AND ACI DETAILING MANUAL. 3. FORM WORK, SHORING, RE-SHORING OR UNDERPINNING SHOP DRAWINGS AS REQUIRED FOR PROJECT.

REINFORCING STEEL:

- REINFORCING BARS SHALL BE DEFORMED BILLET STEEL CONFORMING TO ASTM A615. REINFORCING BARS SHALL BE GRADE 60, UNLESS NOTED OTHERWISE.
- PLAIN BARS FOR SPIRAL REINFORCEMENT SHALL CONFORM TO ASTM A 615, GRADE 60.
- PLAIN STEEL WELDED WIRE REINFORCEMENT SHALL CONFORM TO ASTM A185.
- WELDED DEFORMED STEEL BAR MATS FOR CONCRETE REINFORCEMENT SHALL CONFORM TO ASTM A184.
- BARS SHALL BE BRANDED BY THE MANUFACTURER WITH BAR SIZE AND GRADE OF STEEL AND CERTIFIED MILL REPORTS SHALL BE SUBMITTED FOR RECORD.
- REINFORCING STEEL SHALL BE DETAILED IN ACCORDANCE WITH THE ACI "MANUAL OF STANDARD PRACTICE FOR DETAILING REINFORCED CONCRETE STRUCTURES", LATEST EDITION.
- PROVIDE MINIMUM CLEAR CONCRETE COVER (a) FOR REINFORCEMENT AS SPECIFIED BELOW UNLESS SPECIFICALLY NOTED OTHERWISE ON THE PLANS:

DESCRIPTION			MIN. COVER (IN.)
CONCRETE CAST AGAINST AND PERMENANTLY EXPOSED TO EARTH			3"
CONCRETE EXPOSED TO EARTH OR WEATHER	#6 THROUGH #18 BARS		2"
	#5 BAR, W31 OR D31 WIRE AND SMALLER		1 1/2"
CONCRETE NOT EXPOSED TO EARTH OR WEATHER	SLAB, WALLS, JOISTS		3/4"
	BEAMS, COLUMNS (PRIMARY REINF., TIES, STIRRUPS, SPIRALS.		1 1/2"
	SHELLS, FOLDED PLATES	#6 BARS AND LARGER	3/4"
		#5 BAR, W31 OR D31 WIRE, AND SMALLER	1/2"

MASONRY:

- CONCRETE BLOCKS USED IN WALLS SHALL CONFORM TO ASTM C90. BRICK SHALL CONFORM TO ASTM C62 AND ASTM C216, AS APPLICABLE. MORTAR FOR BRICK VENEER AND OTHER MASONRY SHALL CONFORM TO ASTM C270, TYPE N. TYPE S MORTAR SHALL BE USED TYPICALL FOR ALL MASONRY, AND TYPE M MORTAR SHALL BE USED FOR BELOW GRADE MASONRY AND/OR MASONRY IN CONTACT WITH SOIL, U.N.O.
- HOLLOW LOAD BEARING UNITS SHALL CONFORM TO ASTM C90, NORMAL WEIGHT TYPE II WITH A MIN. NET COMPRESSIVE UNIT STRENGTH OF 1900 psi. (NET AREA COMPRESSIVE MASONRY STRENGTH fm' = 1500 psi)
- REINFORCED MASONRY WALLS SHALL BE BUILT SUCH THAT CELLS LINE UP VERTICALLY.
- FILLED CELLS SHALL BE FILLED WITH COARSE GROUT. COARSE GROUT SHALL CONFORM TO ASTM C476. PROPERTIES SHALL INCLUDE: 2500 psi AT 28 DAYS, 3/8" MAXIMUM AGGREGATE AND 8"-11" SLUMP. FILLED CELLS MAY ALTERNATIVELY BE FILLED WITH A 3000 psi PEA GRAVEL MIX CONCRETE. TEH PEA GRAVEL MIX SHALL BE PROPORTIONED WITH A MAXIMUM AGGREGATE SIZE OF 3/8" DIAMETER TO PROVIDE A MIN. OF 1/2" CLEARANCE, ADDITIONALLY, THE PEA GRAVEL MIX SHALL PROVIDE AN 8" TO 11" SLUMP.
- A CONTINUOUS REINFORCED CMU/CONCRETE BOND BEAM SHALL BE PROVIDED ON TOP OF EACH WALL. BOND BEAMS SHALL BE MIN. 8"x8" WITH CONTINUOUS (2) #4 REBARS.
- WHERE EXPANSION OR ANY OTHER ANCHORS ARE SHOWN, MASONRY CELLS SHALL BE FULLY GROUTED AT MINIMUM OF 8" ABOVE AND BELOW EACH EXPANSION ANCHOR OR ANY OTHER ANCHORS UNLESS NOTED OTHERWISE.
- UNLESS NOTED OTHERWISE ON PLANS, PROVIDE A MIN. OF (2) FULLY GROUTED COURSES BY 32" LENGTH AT ALL STRUCTURAL STEEL BEARING.
- VERTICAL REINFORCING BARS SHALL BE HELD IN POSITION WITH BAR POSITIONERS @ 8'-0" O.C., AT TOP AND BOTTOM OF BAR WITH MIN. CLEARANCE OF 1/2" FROM MASONRY. THE CLEAR DISTANCE BETWEEN BARS SHALL NOT BE LESS THAN ONE BAR DIAMETER NOR LESS THAN 1". CENTER BARS IN WALLS UNLESS NOTED OTHERWISE.
- REINFORCING BARS SHALL BE STRAIGHT EXCEPT FOR BENDS AROUND CORNERS.
- MIN. LAP SPLICE SHALL BE 36 BAR DIAMETERS. WIRE TIE LAP SPLICES.
- WHEN A FOUNDATION DOWEL DOESN'T LINE UP WITH A VERTICAL CORE. IT SHALL NOT BE SLOPED MORE THAN 1:6. DOWELS SHALL BE GROUTED IN TO A CORE IN VERTICAL ALIGNMENT, EVEN IF IT IS IN A CELL ADJACENT TO VERTICAL WALL REINFORCEMENT.
- HORIZONTAL WALL REINFORCING SHALL BE ZINC COATED COLD DRAWN TRUSS TYPE DUR-O-WALL (OR EQUIVALENT) CONFORMING TO ASTM A82 SPACED AT 16' O.C. MAX. HORIZONTAL JOINT REINFORCING SHALL CONSIST OF (2) 9 GA OR LARGER HORIZONTAL BARS WELD CONNECTED WITH 12 GA OR LARGER CROSS-WIRES. ZINC COATING CONFORM TO ASTM A116-73. LAP SPLICE JOINT REINFORCEMENT 12-INCHES MIN.
- PROVIDE HORIZONTAL JOINT REINFORCEMENT AT MASONRY OPENINGS SUCH AS DOORS AND WINDOWS. CONTINUE JOINT REINFORCING FOR THE FIRST AND SECOND BLOCK COURSE ABOVE AND BELOW MASONRY OPENING. EXTEND JOINT REINFORCING A MIN. OF TWO FEET BEYOND OPENINGS.
- CLEANOUTS SHALL BE PROVIDED IN THE BOTTOM COURSE OF MASNORY IN EACH GROUT POUR WHEN THE POUR HEIGHT EXCEEDS 5'. CLEANOUTS SHALL BE SAW-CUT 4" x 4".
- GROUT POUR HEIGHT SHALL NOT EXCEED 24'. PLACE GROUT IN 5' MAX. LIFTS HEIGHTS.
- CONSOLIDATE GROUT POURS AT THE TIME OF PLACEMENT BY MECHANICAL MEANS AND RECONSOLIDATE AFTER INITIAL WATER LOSS AND SETTLEMENT.
- STORE BLOCKS ON PALLETS AND COVER WITH VISQUEEN.
- PLACE ALL MASONRY IN RUNNING BOND WITH 3/8" MORTAR JOINTS. PROVIDE COMPLETE COVERAGE FACE SHELL MORTAR BEDDING HORIZONTAL AND VERTICALL FULLY MORTAR WEBS IN ALL COURSES OF PIERS, COLUMNS, AND PILASTERS AND ADJACENT TO GROUT CELLS.
- MASONRY CONTROL JOINTS SHALL BE INSTALLED AT LOCATIONS INDICATED ON DRAWINGS. ADDITIONALLY INSTALL MASONRY CONTROL JOINTS SPACE AT 26'-0" O.C.

STRUCTURAL STEEL:

- STRUCTURAL STEEL SHALL CONFORM TO THE LATEST EDITION OF THE AISC "SPECIFICATION FOR THE DESIGN, FABRICATION AND ERECTION OF STRUCTURAL STEEL FOR BUILDINGS".
- ALL W SHAPE STEEL SHALL CONFORM TO ASTM 992 (Fy = 50 KSI).
- ALL HOLLOW STRUCTURAL SECTIONS (HSS) SHALL CONFORM TO ASTM A500, GRADE B.
- ALL OTHER STRUCTURAL STEEL SHALL CONFORM TO ASTM A36 (Fy = 36 KSI).
- ALL ANCHOR BOLTS SHALL CONFORM TO ASTM A307 U.N.O.
- ALL HIGH STRENGTH BOLTS SHALL CONFORM TO ASTM A325 U.N.O.
- BOLTED CONNECTIONS SHALL USE HIGH STRENGTH BOLTS.
- BOLTS IN MOMENT FRAMES SHALL USE HIGH STRENGTH SLIP CRITICAL BOLTS. SLIP CRITICAL CONNECTIONS SHALL HAVE CONTACT SURFACES MEETING CLASS A SURFACE CONDITIONS.
- WELDED CONNECTIONS SHALL CONFORM TO THE LATEST EDITION OF AMERICAN WELDING SOCIETY CODE, AWS D11.
- ALL WELDED CONNECTIONS SHALL USE E70XX, LOW HIDROGEN ELECTRODES U.N.O. ELECTRODES SHALL BE PROTECTED FROM MOISTURE.
- BOLTED CONNECTIONS SHALL CONFORM TO THE REQUIREMENTS OF "SPECIFICATIONS FOR STRUCTURAL JOINTS USING ASTM A325 OR A490 BOLTS" AS APPROVED BY RESEARCH COUNCIL ON STRUCTURAL CONNECTIONS (RCSC). USE BEARING TYPE BOLTS WITH THREAD ALLOWED ACROSS THE SHEAR PLANE.
- ALL STEEL CONNECTIONS SHALL BE WELDED AROUND WITH 1/4" FILLET WELD UNLESS OTHERWISE NOTED, EXCEPT FOR SLOTTED CONNECTIONS.
- EXPANSION BOLTS SHALL BE GALVANIZED CARBON STEEL COMPONENTS, ZINC-PLATED TO COMPLY WITH ASTM B 633 AND FF-S 325, GROUP II, TYPE 4, CLASS I.
- FULL PENETRATION WELDS SHALL BE MADE AGAINST A 1/8" x 1" BACKER PLATE TACK WELDED IN PLACE BELOW THE WELD. PENETRATION WELDS SHALL BE EQUIVALENT IN DEPTH AND LENGTH TO THE PARTS JOINED.
- SUBMIT ALL STRUCTURAL STEEL/LIGHT GAGE SHOP DRAWINGS SIGNED AND SEALED BY A REGISTERED PROFESSIONAL ENGINEER. SHOP DRAWINGS SHALL INCLUDE MEMBER SIZES, MATERIAL SPECIFICATION, CONNECTIONS AND/OR ANY OTHER ITEMS REQUIRED BY GOVERNING BUILDING CODE OR JURISDICTION.
- NO FABRICATION SHALL BE STARTED PRIOR TO SHOP DRAWINGS APPROVAL.

STRUCTURAL LUMBER:

- WOOD CONSTRUCTION, INCLUDING LUMBER, CONNECTIONS, AND DETAILS SHALL COMPLY WITH THE REQUIREMENTS OF AMERICAN INSTITUTE OF TIMBER CONSTRUCTION AND THE NATIONAL FOREST AND PAPER ASSOCIATION'S CURRENT "NATIONAL DESIGN SPECIFICATION FOR WOOD CONSTRUCTION".
- ALL STRUCTURAL WOOD MEMBERS SHALL COMPLY WITH FOLLOWING MINIMUM DESIGN VALUES:

SPECIES		Fb	Ft (a)	Fv (a)	Fc ⊥ (a)	Fc II (b)	E	Emin
HEMFIR #2		850 psi	525 psi	150 psi	405 psi	1300 psi	1300000 psi	470000 psi
SPF #2		875 psi	450 psi	135 psi	425 psi	1150 psi	1400000 psi	510000 psi
THICKNESS	WIDTH	SOUTHERN PINE #2						
2" TO 4"	2" TO 4"	1100 psi	675 psi	175 psi	565 psi	1450 psi	1400000 psi	510000 psi
	5" TO 6"	1000 psi	600 psi	175 psi	565 psi	1400 psi	1400000 psi	510000 psi
	8"	925 psi	550 psi	175 psi	565 psi	1350 psi	1400000 psi	510000 psi
	10"	800 psi	475 psi	175 psi	565 psi	1300 psi	1400000 psi	510000 psi
	12"	750 psi	450 psi	175 psi	565 psi	1250 psi	1400000 psi	510000 psi
MICROLAM LVL (ML)		2600 psi	1555 psi	285 psi	750 psi	2510 psi	1900000 psi	965710 psi
PARALLAM PSL 1.8E		2400 psi	1755 psi	190 psi	425 psi	2500 psi	1800000 psi	914880 psi
PARALLAM PSL 2.0E		2900 psi	2025 psi	290 psi	750 psi	2900 psi	2000000psi	1016535 psi
TIMBERSTRAND LSL1.3E		1900 psi	1075 psi	400 psi	680 psi	1400 psi	1300000psi	660750 psi
TIMBERSTRAND LSL1.55E		2325 psi	1070 psi	310 psi	800 psi	2050 psi	1550000psi	787815 psi

- ALL EXTERIOR WOOD MEMBERS EXPOSED TO WEATHER SHALL BE PRESSURE TREATED PER APPLICABLE CODES/STANDARDS.
- ALL FASTENERS/HARDWARE EXPOSED TO WEATHER OR IN CONTACT WITH TREATED WOOD SHALL BE HOT DIP GALVANIZED OR STAINLESS STEEL OR Z-MAX COATED OR APPROVED FOR SUCH USE BY MANUFACTURER.
- PREVENT DIRECT CONTACT OF INTERIOR WOOD WITH CONCRETE OR MASONRY. PROTECT ALL WOOD FROM MOISTURE BY APPLYING APPROVED WRAP AND AVOID DIRECT CONTACT WITH MASONRY OR CONCRETE.
- CONTRACTOR SHALL SUBMIT SHOP DRAWINGS FOR ENGINEER'S REVIEW AND APPROVAL PRIOR TO ORDERING JOISTS FOR CONSTRUCTION.
- FLOOR & ROOF FRAMING/DIRECTION SHOWN ON THE DRAWINGS ARE SCHEMATIC AND FOR REFERENCE ONLY AND SHALL NOT BE CONSIDERED AS SHOP DRAWINGS. SHOP DRAWINGS FROM MANUFACTRER SHALL BE FOLLOWED FOR JOIST/TRUSS PLACEMENTS.
- ALL MECHANICAL, PLUMBING ELECTRICAL OR ANY OTHER COMPONENTS FROM OTHER DISCIPLINES SHALL BE COORDINATED BY MANUFACTURER IN SHOP DRAWINGS AS WELL AS ON THE FIELD. NOTIFY ARCHITECT/STRUCTURAL ENGINEER IF ANY DESCRIPANCY OR CONFLICT FOUND.
- ALL STRUCTURAL FRAMING MEMBERS SUPPORTING FLOOR JOISTS/TRUSSES ARE DESIGNED BASED ON LAYOUT REPRESENTED ON DRAWINGS. ANY MODIFICATION, CHANGE OR ADDITION SHALL NOT BE DONE WITHOUT PRIOR APPROVAL BY ARCHITECT/ENGINEER. SHOP DRAWINGS SHALL BE SUBMITTED FOR REVIEW FOR ANY SUCH CHANGE.
- ROOF/FLOOR TRUSS MANUFACTURER SHALL PROVIDE NECESSARY BRACING TO WEB MEMBERS AS REQUIRED BY GOVERNING CODE/STANDARD.
- ALL ROOF SHEATHING SHALL BE APA RATED 7/16" C-C, C-D OR STRUCTURAL II WITH SPAN RATING OF 48/24 PER "AMERICAN PLYWOOD ASSOCIATION". PROVIDE MIN. NAILING PATTERN W/ 8d COMMON NAILS @ 6" O.C. ON EDGES AND 12" O.C. IN FIELD. PROVIDE PLYWOOD CLIPS AT PLYWOOD EDGES BETWEEN EACH FRAMING MEMBER.
- ALL FLOOR SHEATHING SHALL BE 3/4" THICK T&G APA RATED AND WITH SPAN RATING OF 48/24 OR STURD-I-FLOOR 24" O.C. RATED PLYWOOD SHALL BE GLUED AND NAILED. INSTALL 100% GLUE LINE AND MIN. NAILING PATTERN OF 10d COMMON NAILS @ 6" O.C. ON EDGE SUPPORTS AND 12" O.C. INTERMEDIATE SUPPORTS.
- ALL EXTERIR STUD WALL SHEATHING SHALL BE MIN. 7/16" APA RATED NAILED WITH 8d NAILS @ 6" O.C. ON EDGES AND 12" O.C. IN FIELD U.N.O. REFER TO SHEAR WALL SCHEDULE FOR MORE INFORMATION.
- ALL WOOD PLATE SPLICES SHALL BE STAGGERED AT 4'-0" MIN.
- PROVIDE MIN. (2) 2x12 UP TO 4'-0" SPAN, (2) ML10 FOR 4'-0" TO 6'-0" SPAN, (2) ML12 FOR 6'-0" TO 9'-0" SPAN WHERE HEADER/LINTEL/BEAM SIZES ARE NOT SPECIFIED ON PLANS. ANY SPANS LARGER THAN 9'-0" SUPPORITNG FRAMING MEMBERS (POSTS/BEAMS/BEARING WALLS) AND NOT SPECIFIED ON PLANS SHALL BE NOTIFIED TO ENGINEER IMMEDIATELY.
- PROVIDE MIN. DOUBLE JOISTS OR SPECIAL FLOOR TRUSS UNDER (2) 2x POSTS AND (2) PLY MICROLAM LVL OR SPECIAL FLOOR TRUSS TO MATCH FLOOR THICKNESS UNDER (3) 2x POSTS UNLESS NOTED OTHERWISE ON THE PLAN. CONTRACTOR SHALL NOTIFY ENGINEER FOR SUPPORTING STRUCTURAL MEMBER FOR ALL OTHER POST SIZES COMING FROM ABOVE.
- PROVIDE MIN. (3) 2x POSTS UNDER ALL BEAMS/GIRDER TRUSSES/HEADERS U.N.O. ON PLANS.
- PROVIDE SOLID BLOCKING WITHIN FLOOR SYSTEM FOR POSTS/JACKSTUDS COMING FROM ABOVE.
- ALL POSTS/JACKS SHALL CONTINUE DOWN TO FOUNDATION/STRUCTURAL MEMBERS SUCH AS BEAMS/GIRDERS/GIRDER TRUSSES. NOTIFY ENGINEER IF ANY DESCRIPANCY FOUND DURING CONSTRUCTION.
- PROVIDE DOUBLE JOISTS OR SPECIAL TRUSS UNDER ALL WALLS/PARTITIONS EXTEND 1/2 OR MORE OF FRAMING SPAN.
- PROVIDE BLOCKING BETWEEN TOP FLANGE/CHORD OF JOISTS/FLOOR TRUSS SUPPORTING PARTITION WALL FROM ABOVE.
- PROVIDE FULL HEIGHT BLOCKING BETWEEN FLOOR JOISTS/TRUSSES SUPPORTING BEARING WALL FROM ABOVE.
- ALL DIMENSION LUMBER SHALL BE DRESSED S4S AND SHALL BEAR GRADE STAMP OF THE MANUFACTURER'S ASSOCIATION.
- ALL LUMBER SHALL BE SEASONED AND FREE FROM WRAP.
- PROVIDE SOLID BLOCKING BETWEEN JOISTS AND RAFTERS AT ALL BEARING POINTS AND AT MIN. OF 8'-0" O.C.
- PROVIDE STRONG BACKS AT MIN. OF 10'-0" O.C. AT ALL FLOOR TRUSSES.
- PROVIDE CONTINUOUS RIM BOARD AT PERIMETER AND AT END BEARING WALLS WHEN I-JOISTS ARE USED FOR FLOOR FRAMING.
- PROVIDE MIN. 1 3/4" BEARING AT END AND 3 1/2" MIN. BEARING AT INTERMEDIATE SUPPORT WHEN I-JOISTS ARE USED FOR FLOOR FRAMING.
- PROVIDE WEB-STIFFENERS, SQUASH BLOCKS, BEARING BLOCKS, BLOCKING PANELS, FILLER BLOCKS, BACKER BLOCKS AS RECOMMENDED BY MANUFACTURER. REFER TO MANUFACTURER'S GUIDELINES FOR INSTALLATION AND FASTENING.
- PRE-ENGINEERED/PRE-FABRICATED WOOD ROOF/FLOOR TRUSSES SHALL BE IN ACCORDANCE WITH "DESIGN SPECIFICATIONS FOR METAL PLATE CONNECTED WOOD TRUSSES " BY "TRUSS PLATE INSTUTE (TPI - I)"
- PROVIDE HURRICANE CLIPS TO RESIST UPLIFT AS SHOWN ON SHOP DRAWINGS. PROVIDE SIMPSON "H2.5" HURRICANE CLIP MIN.
- REFER & FOLLOW "BCSI" GUIDES B1 THRU B11 FOR HANDLING, INSTALLING, RESTRAINING AND BRACING OF METAL PLATE CONNECTED WOOD TRUSSES.
- INSTALLATION OF PRE-ENGINEERED/PRE-FABRICATED ROOF AND/OR FLOOR TRUSSES SHALL BE DONE PER TRUSS DESIGN DRAWINGS AND TRUSS ENGINEER SHALL BE RESPONSIBLE FOR PROVIDING ANY REPAIRS OR ALTERATIONS IN TRUSS CONFIGURATIONS.

EXISTING CONDITIONS:

- ALL EXISTING STRUCTURAL MEMBERS TO REMAIN INTACT UNLESS SPECIFICALLY NOTED TO BE REMOVED BY MOST RECENT DEMOLITION DOCUMENTS BY ARCHITECT OR OTHERWISE NOTED ON THESE DRAWINGS.
- ALL INFORMATION ON THESE DRAWINGS RELATED TO EXISTING CONDITIONS ARE PROVIDED BASED ON AVAILABLE CONTRACT DRAWINGS OR INFORMATION PER ARCHITECTURAL DRAWINGS. CONTRACTOR IS RESPONSIBLE FOR FIELD VERIFYING ALL EXISTING CONDITIONS AND NOTIFY STRUCTURAL ENGINEER IF ANY DISCREPANCY IS FOUND BETWEEN CONTRACT DRAWINGS AND EXISTING CONDITIONS.
- THE PORTION OF THE STRUCTURE THAT IS SHOWN TO BE STRUCTURALLY MODIFIED HAVE BEEN DESIGNED ACCORDING TO BEST ENGINEERING PRACTICE. HOWEVER WE DO NOT ASSUME RESPONSIBILITY FOR ANY DAMAGE THAT MAY ARISE FOR ANY PORTION OF THE BUILDING NOT REDESIGNED, ALTERED OR CONSTRUCTED UNDER THIS SET OF DESIGN DRAWINGS. WE DO NOT ASSUME ANY RESPONSIBILITY OR LIABILITY TOWARDS DEFICIENCIES IN THE CONDITION OF THE BUILDING PRIOR TO RENOVATION PER NEW CONTRACT DRAWINGS.
- CONTRACTOR SHALL FIELD VERIFY ALL DIMENSIONS PRIOR TO COMMENCEMENT OF ANY WORK.

WOOD FASTENERS/CONNECTORS:

- FASTENERS USED BELOW GRADE TO ATTACH PLYWOOD TO EXTERIOR WALLS OR CRAWL SPACE STUD WALLS OR KNEE WALL CONSTRUCTION OVER FOUNDATION SHALL BE TYPE 304 OR 316 STAINLESS STEEL.
- ALL MECHANICAL WOOD CONNECTORS SHALL BE CLEARLY SPECIFIED ON SHOP DRAWINGS SUPPLIED BY MANUFACTURER AND SHALL BE DESIGNED FOR APPROPRIATE LOAD AS REQUIRED BY GOVERNING CODE/JURISDICTION.
- ALL MECHANICAL CONNECTORS AND/OR FASTENERS INCLUDING NAILS/BOLTS/SCREWS EXPOSED TO CONCRETE/MASONRY/WEATHER SHALL BE HOT DIP GALVANIZED OR STAINLESS STEEL OR APPROVED BY MANUFACTURER FOR SUCH USE.
- BOLT HOLES SHALL BE A MIN. OF 1/32" TO A MAX. OF 1/16" LARGER THAN THE BOLT DIAMETER.
- A METAL PLATE OR WASHER NOT LESS THAN A STANDARD OVERSIZED CUT WASHER SHALL BE BETWEEN THE WOOD AND THE BOLT HEAD AND BETWEEN THE WOOD AND THE NUT.
- SNUG TIGHT ALL BOLTS. TIGHTEN CONNECTIONS WHICH HAVE LOOSENED DUE TO WOOD SHRINKAGE.
- INSTALL BOLTS TO EXCLUDE THREADED PORTIONS OF BOLTS FROM SHEAR PLANES.
- LAG SCREWS SHALL BE INSTALLED IN PRE-DILLED HOLES.
- THE CLEARANCE HOLE FOR THE SHANK SHALL HAVE THE SAME DIAMETER AS THE SHANK AND THE SAME DEPTH OF PENETRATION AS THE LENGTH OF THE SHANK.
- THE LEAD HOLE FOR THE THREADED PORTION SHALL HAVE A DIAMETER EQUAL TO 75% FOR SOUTHERN PINE, 70% FOR OTHER SPECIES OF THE SHANK DIAMETER AND A MIN. LENGTH EQUAL TO LENGTH OF THREADED PORTION.
- WOOD SILL PLATE SHALL BE ANCHORED TO CONCRETE/MASONRY W/ 1/2" DIA. ANCHOR BOLTS WITH MIN. 7" EMBEDMENT AND 6'-0" O.C. AND 12" MAX. FROM PLATE ENDS OR SPLICES. REFER TO MANUFACTURER'S RECOMMENDATIONS FOR ALTERNATE ANCHORS. REFER TO SHEAR WALL SCHEDULE FOR ADDITIONAL ANCHORAGE REQUIREMENTS. PROVIDE MIN. 3"x3" WASHERS TO ANCHOR BOLTS WITH ENGINEERED SHEAR WALLS (SW) ARE SPECIFIED ON DRAWINGS.
- REFER TO FASTENING SCHEDULE FOR MORE INFORMATION.

NOTES ON FASTENER SCHEDULE (IRC 2015 - TABLE R602.3(1)):

a. ALL NAILS ARE SMOOTH-COMMON, BOX OR DEFORMED SHANKS EXCEPT WHERE OTHERWISE STATED. NAILS USED FOR FRAMING AND SHEATHING CONNECTIONS SHALL HAVE MIN. AVERAGE BENDING YIELD STRENGTHS AS SHOWN 80 ksi FOR SHANK DIAMETER OF 0.192 INCHES, 90 ksi FOR SHANK DIAMETERS LARGER THAN 0.142 INCHES BUT NOT LARGER THAN 0.177 INCHES AND 100 ksi FOR SHANK DIAMETERS OF 0.142 INCHES OR LESS
b. STAPLES ARE 16 GAGE WIRE AND HAVE A MINIMUM 7/16 INCH ON DIAMETER CROWN WIDTH
c. NAILS SHALL BE SPACED AT NOT MORE THAN 6" O.C. AT ALL SUPPORTS WHERE SPANS ARE 48" OR GREATER
d. 4'-0" x 8'-0" OR 4'-0" x 9'-0" PANELS SHALL BE APPLIED VERTICALLY.
e. SPACING OF FASTENERS NOT INCLUDED IN THIS TABLE SHALL BE BASED ON TABLE R602.3(2) OF IRC 2015.
f. FOR REGIONS HAVING BASIC WIND SPEED OF 110 MPH OR GREATER 8d DEFORMED (2 1/2" x 0.120) NAILS SHALL BE USED FOR ATTACHING PLYWOOD AND WOOD STRUCTURAL PANEL ROOF SHEATHING TO FRAMING WITHIN MIN. 48" DISTANCE FROM GABLE END WALLS, IF MEAN ROOF HEIGHT IS MORE THAN 25'-0" UP TO 35'-0" MAXIMUM.
g. FOR REGIONS HAVING BASIC WIND SPEED OF 100 MPH OR LESS, NAILS FOR ATTACHING WOOD STRUCTURAL PANEL ROOF SHEATHING TO GABLE END WALL FRAMING SHALL BE SPACED 6" O.C. WHEN BASIC WIND SPEED IS GREATER THAN 100 MPH, NAILS FOR ATTACHING PANEL ROOF SHEATHING TO INTERMEDIATE SUPPORTS SHALL BE SPACED 6" O.C. FOR MIN. 48" DISTANCE FROM RIDGES, EAVES AND GABLE END WALLS; AND 4" O.C. TO GABLE END WALL FRAMING.
h. GYPSUM SHEATHING SHALL CONFORM TO ASTM C 1396 AND SHALL BE INSTALLED IN ACCORDANCE WITH GA 253. FIBERBOARD SHEATHING SHALL CONFORM TO ASTM C 208.
i. SPACING OF FASTENERS ON FLOOR SHEATHING PANEL EDGES APPLIES TO PANEL EDGES SUPPORTED BY FRAMING MEMBERS AND REQUIRED BLOCKING AND AT ALL FLOOR PERIMETERS ONLY. SPACING OF FASTENERS ON ROOF SHEATHING PANEL EDGES APPLIES TO PANEL EDGES SUPPORTED BY FRAMING MEMBERS AND REQUIRED BLOCKING. BLOCKING OF ROOF OR FLOOR SHEATHING PANEL EDGES PERPENDICULAR TO THE FRAMING MEMBERS NEED NOT BE PROVIDED EXCEPT AS REQUIRED BY OTHER PROVISIONS OF THE CODE. FLOOR PERIMETER SHALL BE SUPPORTED BY FRAMING MEMBERS OR SOLID BLOCKING.

ABBREVIATIONS:

ARCH= ARCHITECTURAL
B.E.W= BOTTOM EACH WAY
BM= BEAM
BRG= BEARING
COL= COLUMN
CONC.= CONCRETE
CONT= CONTINUOUS
DBL= DOUBLE
EA= EACH
E.E.= EACH END
EXP= EXPANSION
EXT.= EXTERIOR
FDN= FOUNDATION
FTG= FOOTING
G.T.= GIRDER TRUSS
HDR= HEADER
INT.= INTERIOR
INFO INFORMATION
J= JACK STUD
MANUF= MANUFACTURER
MIN= MINIMUM
MAX= MAXIMUM
ML= MICROLAM
N.T.S= NOT TO SCALE
O.C.= ON CENTER
PLYWD= PLYWOOD
P.T.= PRESSURE TREATED
P.A. = POST FROM ABOVE
REQD= REQUIRED
S= KING STUD
SPF= SPRUCE PINE FIR
SP= SOUTHERN PINE
STL= STEEL
TYP= TYPICAL
W/= WITH
WD= WOOD
WWF= WELDED WIRE FABRIC
U.N.O.= UNLESS NOTED OTHERWISE

NO.	DESCRIPTION OF BUILDING ELEMENT	FASTNERS
1	BLOCKING BETWEEN JOISTS OR RAFTERS TO TOP PLATE (TOE NAIL)	(3) 8d (2 1/2" x 0.113")
2	CEILING JOISTS TO PLATE (TOE NAIL)	(3) 8d (2 1/2" x 0.113")
3	CEILING JOISTS NOT ATTACHED TO PARALLEL RAFTER, LAPS OVER PARTIAIONS (FACE NAIL)	(3) 10d
4	COLLAR TIE RAFTER (FACE NAIL) OR 1 1/4" x 20 GAGE RIDGE STRAP	(3) 10d (3" x 0.128")
5	RAFTER TO PLATE (TOE NAIL)	(2) 16d (3 1/2" x 0.135")
6	ROOF RAFTERS TO RIDGE, VALLEY OR HIP RAFTERS TOE NAILS FACE NAILS	 (4) 16d (3 1/2" x 0.135") (3) 16d (3 1/2" x 0.135")
7	BUILT-UP CORNER STUDS	10d (3" x 0.128") @ 24" O.C.
8	BUILT-UP HEADER, TWO PIECES W/ 1/2" SPACER	16d (3 1/2" x 0.135") @ 16" O.C. ALONG EACH EDGE
9	CONTINUED HEADER, TWO PIECES	16d (3 1/2" x 0.135") @ 16" O.C. ALONG EACH EDGE
10	CONTINUOUS HEADER TO STUD (TOE NAIL)	(4) 8d (2 1/2" x 0.113")
11	DOUBLE STUDS (FACE NAILS)	10d (3" x 0.128") @ 24" O.C.
12	DOUBLE TOP PLATES (FACE NAILS)	10d (3" x 0.128") @ 24" O.C.
13	DOUBLE TOP PLATES, MIN. 48" OFFSET OF END JOINSTS (FACE NAILS IN LAPPED AREA)	(8) 16d (3 1/2" x 0.135")
14	SOLE PLATE TO JOIST OR BLOCKING (FACE NAIL)	16d (3 1/2" x 0.135") @ 16" O.C.
15	SOLE PLATE TO JOIST OR BLOCKING (FACE NAIL) AT BRACED WALL PANELS	(3) 16d (3 1/2" x 0.135") @ 16" O.C.

NO.	DESCRIPTION OF BUILDING ELEMENT	FASTNERS
16	STUD TO SOLE PLATE (TOE NAIL)	(3) 8d (2 1/2" x 0.113") OR (2) 16d (3 1/2" x 0.135")
17	TOP OR SOLE PLATE TO STUD (END NAIL)	(2) 16d (3 1/2" x 0.135")
18	TOP PLATES, LAPS AT CORNERS AND INTERSECTIONS (FACE NAIL)	(2) 10d (3" x 0.128")
19	1" BRACE TO EACH STUD AND PLATE (FACE NAIL)	(2) 8d (2 1/2" x 0.113") OR (2) STAPLES 1 3/4"
20	1" x 6" SHEATHING TO EACH BEARING (FACE NAIL)	(2) 8d (2 1/2" x 0.113") OR (2) STAPLES 1 3/4"
21	1" x 8" SHEATHING TO EACH BEARING (FACE NAIL)	(2) 8d (2 1/2" x 0.113") OR (3) STAPLES 1 3/4"
22	WIDER THAN 1" x 8" SHEATHING TO EACH BEARING (FACE NAIL)	(3) 8d (2 1/2" x 0.113") OR (4) STAPLES 1 3/4"
23	JOIST TO SILL OR GIRDER (TOE NAIL)	(3) 8d (2 1/2" x 0.113")
24	1" x 6" SUBFLOOR OR LESS TO EACH JOIST (FACE NAIL)	(2) 8d (2 1/2" x 0.113") OR (2) STAPLES 1 3/4"
25	2" SUBFLOOR TO JOIST OR GIRDER (BLIND AND FACE NAIL)	(2) 16d (3 1/2" x 0.135")
26	RIM JOIST TO TOP PLATE (TOE NAIL) ROOF APPLICATOIN ALSO	8d (2 1/2" x 0.113") @ 6" O.C.
27	2" PLANKS (PLANK & BEAM - FLOOR & ROOF)	(2) 16d (3 1/2" x 0.135") @ E.E.
28	BUILT-UP GIRDERS & BEAMS, 2" LUMBER LAYERS	10d (3" x 0.128") NAIL EA. LAYER 32" O.C. AT TOP AND BOTT. STAGGERED. TWO NAILS AT ENDS AND AT EA. SPLICE.
29	LEDGER STRIP SUPPORTING JOISTS OR RAFTERS	(3) 16d (3 1/2" x 0.135") AT EACH JOIST OR RAFTER

NO.	BUILDING MATERIALS	DESCRIPTION OF FASTENERS	NAILING PATTERN	
			EDGES	INTERMEDIATE SUPPORTS
WOOD STRUCTURAL PANELS, SUBFLOOR, ROOF AND INTERIOR WALL SHEATHING TO FRAMING & PARTICLE BOARD WALL SHEATHING TO FRAMING				
30	3/8" - 1/2"	6d (2" x 0.113") COMMON NAIL (SUBFLOOR, WALL) (j) 8d (2 1/2" x 0.131") COMMON NAIL (ROOF)	6"	12" (g)
31	5/16" - 1/2"	6d (2" x 0.113") COMMON NAIL (SUBFLOOR, WALL) 8d (2 1/2" x 0.131") COMMON NAIL (ROOF) (f)	6"	12" (g)
32	19/32" - 1"	8d (2 1/2" x 0.131") COMMON NAIL	6"	12" (g)
33	1 1/8" - 1 1/4"	10d (3" x 0.148") COMMON NAIL OR 8d (2 1/2" x 0.131") DEFORMED NAIL	6"	12"
OTHER WALL SHEATHING (h)				
34	1/2" STRUCTURAL CELLULOSIC FIBERBOARD SHEATHING	1/2" GALVANIZED ROOFING NAIL, 7/16' CROWN OR 16 GA. STAPLE, 1" CROWN & 1 1/4" LONG	3"	6"
35	25/32" STRUCTURAL CELLULOSIC FIBERBOARD SHEATHING	1 3/4" GALVANIZED ROOFING NAIL, 7/16' CROWN OR 16 GA. STAPLE, 1" CROWN & 1 1/2" LONG	3"	6"
36	1/2" GYPSUM SHEATHING (d)	1 1/2" GALVANIZED ROOFING NAIL OR 1 1/2" LONG GALVANIZED STAPLES, OR 1 1/4" SCREWS TYPE W OR S.	7"	7"
37	1/2" GYPSUM SHEATHING (d)	1 3/4" GALVANIZED ROOFING NAIL OR 1 5/8" LONG GALVANIZED STAPLES, OR 1 5/8" SCREWS TYPE W OR S.	7"	7"
WOOD STRUCTURAL PANELS, COMBINATION OF SUBFLOOR UNDERLAYMENT TO FRAMING				
38	3/4" AND LESS	6d (2" x 0.120") DEFORMED NAIL OR 8d (2 1/2" x 0.131") COMMON NAIL	6"	12"
39	7/8" - 1"	8d (2 1/2" x 0.131") COMMON NAIL OR 8d (2 1/2" x 0.120") DEFORMED NAIL	6"	12"
40	1 1/8" - 1 1/4"	10d (3" x 0.148") COMMON NAIL OR 8d (2 1/2" x 0.120") DEFORMED NAIL	6"	12"

© COPYRIGHT 2016
Structural Engineering content of this drawings are property of structBIM LLC and are issued for this project only. Any re-use or re-production of these drawings shall not be done without written consent of structBIM LLC. These drawings are to be read in conjuction with project specifications and drawings from other consultants. These drawings shall not be used as shop drawings. Do not scale drawings, use dimensions as specified.

G T M A R C H I T E C T S

7735 OLD GEORGETOWN ROAD
SUITE 700
BETHESDA, MD 20814
(240)333-2000
(240)333-2001 FAX
WWW.GTMARCHITECTS.COM

GTM

Seal

Consultant

structBIM ENGINEERS
WE DESIGN....WE BIM
46400 BENEDICT DR, SUITE #211
PHONE: 703-657-4481
E-MAIL: info@structBIM.com

Project

23 HIGH STREET, LOT 2,
BROOKVILLE, MD

I certify that these documents were prepared or approved by me, and that I am a duly licensed Professional Engineer under the laws of the State of Maryland, license number 40082, Expiration Date: 02-13-2023.

N

Issue Description	*Date*

structBIM Project No.	21-0244
Checked By	KK
Drawn By	KK
Scale	1/4" = 1'-0"

Sheet Title

GENERAL NOTES

Sheet No.

SG

COPYRIGHT, 2016 structBIMEngineers, LLC.
PLOTTED ON: 4/15/2022 3:02:12 PM

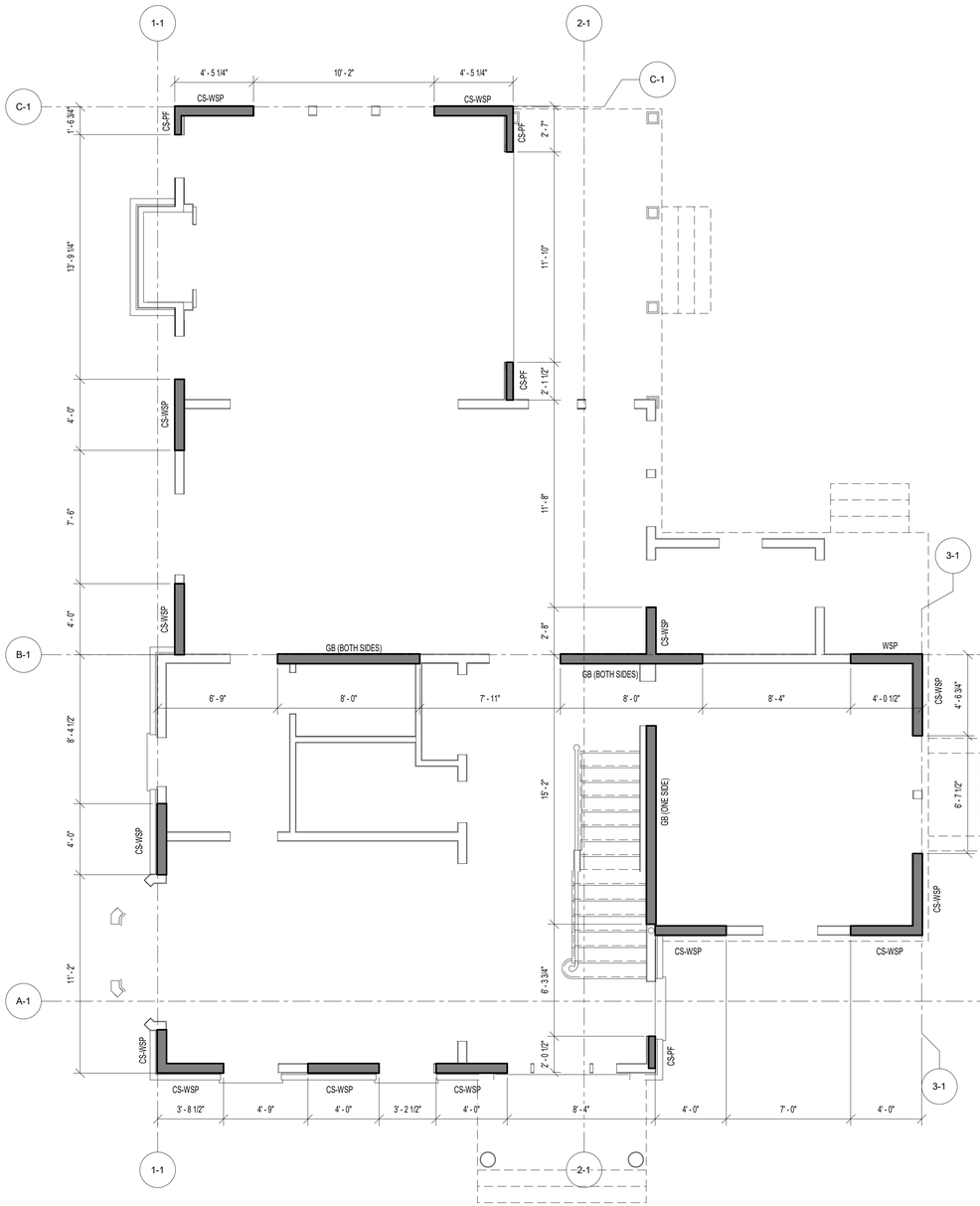

1 SWB1 FIRST FLOOR WALL BRACING PLAN
SCALE: 1/4" = 1'-0"

PLAN LEGENDS & SYMBOLS:

- INDICATES BEARING WALL
- INDICATES DRAIN HOLE FROM ABOVE
- INDICATES JOIST/TRUSS HANEGR (REFER TO SHOP DWGS)
- INDICATES FRAMING DIRECTION
- INDICATES REBAR DIRECTION
- (J+_S) — INDICATES NO. OF KING STUDS AT EACH END; INDICATES NO. OF JACK STUDS AT EACH END
- WF?? — INDICATES WALL FOOTING; WIDTH OF WALL FOOTING IN INCHES
- TS?? — INDICATES THICKENED SLAB; WIDTH OF THICKENED SLAB IN INCHES
- F.x.x — INDICATES ISOLATED COLUMN FOOTING; INDICATES SIZE OF FOOTING IN DECIMAL FEET
- ML?? — MICROLAM LVL 2.0E; DEPTH OF MICROLAM LVL IN INCHES
- LSL?? — LAMINATED STRAND LUMBER 1.7E; DEPTH OF TIMBERSTAND LSL BEAM IN INCHES
- PSL?? — PARALLAM STRAND LUMBER 2.0E; WIDTHxDEPTH OF MEMBER
- CC — COLUMN CAP
- CB — COLUMN BASE
- HD — HOLD DOWN ANCHOR
- MS — METAL STRAP
- H — JOIST/TRUSS/BEAM HANGER
- HC — HURRICANE CLIPS

Ultimate Wind Speed (mph)	115											
BWL Designation	A-1		B-1		C-1		1-1		2-1		3-1	
No. of Floors above BWL	1		1		1		1		1		1	
BWP Method	CS-WSP		GB		CS-WSP		CS-WSP		GB		CS-WSP	
Average BWL Spacing (ft)	19		23.27		25		24		21		19.33	
Tabular Requirement (ft)	6.20		14.30		7.75		7.50		13.05		6.30	
Adjustments: Exposure	B	1.00	B	1.00	B	1.00	B	1.00	B	1.00	B	1.00
Eave-to-Ridge Ht. (ft)	12.00	1.06	12.00	1.06	12.00	1.06	12.00	1.06	12.00	1.06	12.00	1.06
Max. Wall Ht. (ft)	10.00	1.00	10.00	1.00	10.00	1.00	10.00	1.00	10.00	1.00	10.00	1.00
No. of BWLs	3	1.30	3	1.30	3	1.30	3	1.30	3	1.30	3	1.30
Omit Interior Finish?	No	1.00	No	1.00	No	1.00	No	1.00	No	1.00	No	1.00
Added Hold-downs?	No	1.00	No	1.00	No	1.00	No	1.00	No	1.00	No	1.00
Joints Blocked?	Yes	1.00	Yes	1.00	Yes	1.00	Yes	1.00	Yes	1.00	Yes	1.00
Fasteners @ 4" o.c.?	No	1.00	No	1.00	Yes	0.83	No	1.00	Yes	0.70	No	1.00
Required BWP Length (ft)	8.54		19.70		8.86		10.34		12.59		8.68	
Actual BWPs: BWP	Method	Length	Method	Length	Method	Length	Method	Length	Method	Length	Method	Length
1	CS-WSP	3.75	GB (ds)	8.00	CS-WSP	4.50	CS-WSP	2.33	CS-PF	2.00	CS-WSP	4.58
2	CS-WSP	4.00	GB (ds)	8.00	CS-WSP	4.50	CS-WSP	4.00	GB (ss)	5.50	CS-WSP	4.58
3	CS-WSP	4.00	WSP	4.00			CS-WSP	4.00	CS-PF	2.16		
4	CS-WSP	4.00					CS-WSP	4.00	CS-PF	2.58		
5	CS-WSP	4.00					CS-PF	1.75	CS-WSP	2.66		
6												
7												
Contributing Length (ft)	WSP:Pract.wsl SFB:Pract.wsl GB(ss):WL.Sract.wsl GB(ds):Pract.wsl CS-PF:#1.Sract.wsl PFG#1.Sract.wsl PF#.nsl ABW#4'											
Actual BWP Length (ft)	19.75		20.00		9.00		16.08		14.90		9.16	
Actual ≥ Required?	PASS		PASS		PASS		PASS		PASS		PASS	
BWPs ≤ 20' Apart?	Yes		Yes		Yes		Yes		Yes		Yes	
≥ 2 Panels in BWL?	Yes		Yes		Yes		Yes		Yes		Yes	
BWP 10' from Ends?	Yes		Yes		Yes		Yes		Yes		Yes	
Continuous Sheathing	End 1	End 2	End 1	End 2	End 1	End 2	End 1	End 2	End 1	End 2	End 1	End 2
End Conditions	1	1	1	1	1	1	1	1	1	1	1	1
BWL Compliance	PASS		PASS		PASS		PASS		PASS		PASS	

WALL BRACING/SHEAR WALL SCHEDULE

MARK	DESCRIPTION	FASTENING PATTERN
CS-PF	7/16" APA RATED OSB SHEATHING	8d COMMON NAILS (2 1/2" x 0.131") @ 6" O.C. ON EDGES & 12" O.C. IN-FIELD
CS-WSP	7/16" APA RATED OSB SHEATHING	8d COMMON NAILS (2 1/2" x 0.131") @ 6" O.C. ON EDGES & 12" O.C. IN-FIELD
GB (BOTH SIDES)	1/2" GYPSUM WALL BOARD SHEATHING	1 1/2 " GALVANIZED ROOFING NAILS OR 1 1/2" GALVANIZED STAPLES OR 1 1/4" SCREWS TYPE W OR S @ 7" O.C. ON EDGES & IN-FIELD
GB (ONE SIDE)	1/2" GYPSUM WALL BOARD SHEATHING	1 1/2 " GALVANIZED ROOFING NAILS OR 1 1/2" GALVANIZED STAPLES OR 1 1/4" SCREWS TYPE W OR S @ 7" O.C. ON EDGES & IN-FIELD
WSP	7/16" APA RATED OSB SHEATHING	8d COMMON NAILS (2 1/2" x 0.131") @ 6" O.C. ON EDGES & 12" O.C. IN-FIELD

© COPYRIGHT 2016
Structural Engineering content of this drawings are property of structBIM LLC and are issued for this project only. Any re-use or re-production of these drawings shall not be done without written consent of structBIM LLC. These drawings are to be read in conjuction with project specifications and drawings from other consultants. These drawings shall not be used as shop drawings. Do not scale drawings, use dimensions as specified.

GTM ARCHITECTS

7735 OLD GEORGETOWN ROAD
SUITE 700
BETHESDA, MD 20814
(240)333-2000
(240)333-2001 FAX
WWW.GTMARCHITECTS.COM

GTM

Seal

STATE OF MARYLAND — KAMAL KANDASAMY — 40082 — PROFESSIONAL ENGINEER

Consultant

structBIM ENGINEERS
WE DESIGN....WE BIM
46400 BENEDICT DR, SUITE #211
PHONE: 703-657-4481
E-MAIL: info@structBIM.com

Project

23 HIGH STREET, LOT 2,
BROOKVILLE, MD

I certify that these documents were prepared or approved by me, and that I am a duly licensed Professional Engineer under the laws of the State of Maryland, license number 40082, Expiration Date: 02-13-2023.

Issue Description	*Date*

structBIM Project No.	21-0244
Checked By	KK
Drawn By	KK
Scale	1/4" = 1'-0"

Sheet Title
FIRST FLOOR WALL BRACING PLAN

Sheet No.

SWB1

COPYRIGHT, 2016 structBIMEngineers, LLC.
PLOTTED ON: 4/15/2022 3:02:14 PM

FILE NAME:

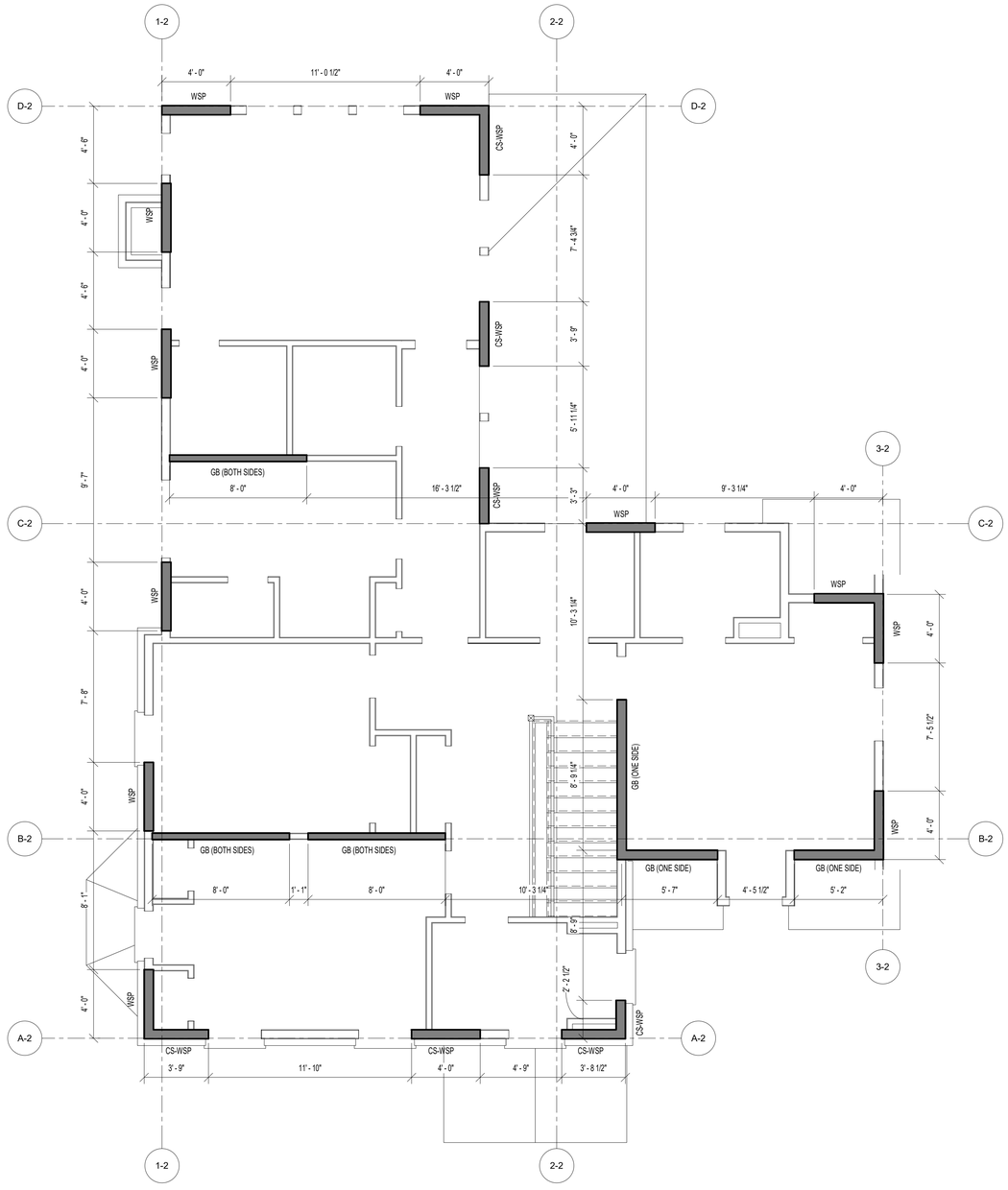

1 SWB2 SECOND FLOOR WALL BRACING PLAN
SCALE: 1/4" = 1'-0"

PLAN LEGENDS & SYMBOLS:

- INDICATES BEARING WALL
- INDICATES DRAIN HOLE FROM ABOVE
- INDICATES JOIST/TRUSS HANEGR (REFER TO SHOP DWGS)
- INDICATES FRAMING DIRECTION
- INDICATES REBAR DIRECTION
- (_J+_S) — INDICATES NO. OF KING STUDS AT EACH END; INDICATES NO. OF JACK STUDS AT EACH END
- WF?? — INDICATES WALL FOOTING; WIDTH OF WALL FOOTING IN INCHES
- TS?? — INDICATES THICKENED SLAB; WIDTH OF THICKENED SLAB IN INCHES
- F.x.x — INDICATES ISOLATED COLUMN FOOTING; INDICATES SIZE OF FOOTING IN DECIMAL FEET
- ML?? — MICROLAM LVL 2.0E; DEPTH OF MICROLAM LVL IN INCHES
- LSL?? — LAMINATED STRAND LUMBER 1.7E; DEPTH OF TIMBERSTAND LSL BEAM IN INCHES
- PSL?? — PARALLAM STRAND LUMBER 2.0E; WIDTHxDEPTH OF MEMBER
- CC — COLUMN CAP
- CB — COLUMN BASE
- HD — HOLD DOWN ANCHOR
- MS — METAL STRAP
- H — JOIST/TRUSS/BEAM HANGER
- HC — HURRICANE CLIPS

Ultimate Wind Speed (mph)	115															
BWL Designation	A-2		B-2		C-2		D-2		1-2		2-2		3-2			
No. of Floors above BWL	0		0		0		0		0		0		0			
BWP Method	CS-WSP		GB		GB		WSP		WSP		GB		WSP			
Average BWL Spacing (ft)	11.58		16.5		22.25		24.33		23		23		19			
Tabular Requirement (ft)	2.24		5.45		7.18		4.37		4.10		7.40		3.35			
Adjustments: Exposure	B	1.00	B	1.00	B	1.00	B	1.00	B	1.00	B	1.00	B	1.00		
Adjustments: Eave-to-Ridge Ht. (ft)	12.00	1.12	12.00	1.12	12.00	1.12	12.00	1.12	12.00	1.12	12.00	1.12	12.00	1.12		
Adjustments: Max. Wall Ht. (ft)	9.00	0.95	9.00	0.95	9.00	0.95	9.00	0.95	9.00	0.95	9.00	0.95	9.00	0.95		
Adjustments: No. of BWLs	4	1.45	4	1.45	4	1.45	4	1.45	3	1.30	3	1.30	3	1.30		
Adjustments: Omit Interior Finish?	No	1.00	No	1.00	No	1.00	No	1.00	No	1.00	No	1.00	No	1.00		
Adjustments: Added Hold-downs?	No	1.00	No	1.00	No	1.00	No	1.00	No	1.00	No	1.00	No	1.00		
Adjustments: Joints Blocked?	Yes	1.00	Yes	1.00	Yes	1.00	Yes	1.00	Yes	1.00	Yes	1.00	Yes	1.00		
Adjustments: Fasteners @ 4" o.c.?	No	1.00	No	1.00	No	1.00	No	1.00	No	1.00	No	1.00	No	1.00		
Required BWP Length (ft)	3.45		8.41		11.07		6.74		5.67		10.24		4.63			
Actual BWPs: BWP	Method	Length	Method	Length	Method	Length	Method	Length	Method	Length	Method	Length	Method	Length		
Contributing Length (ft) 1	CS-WSP	3.75	GB (ds)	8.00	GB (ds)	8.00	WSP	4.00	WSP	4.00	CS-WSP	2.25	WSP	4.00		
2	CS-WSP	4.00	GB (ds)	8.00	WSP	4.00	WSP	4.00	WSP	4.00	GB (ss)	4.25	WSP	4.00		
3	CS-WSP	3.75	GB (ss)	2.50	WSP	4.00			WSP	4.00	CS-WSP	3.25				
4			GB (ss)	2.75					WSP	4.00	CS-WSP	3.25				
5									WSP	4.00	CS-WSP	4.00				
6																
7																
Actual BWP Length (ft)	11.50		21.25		16.00		8.00		20.00		17.00		8.00			
Actual ≥ Required?	PASS		PASS		PASS		PASS		PASS		PASS		PASS			
BWPs ≤ 20' Apart?	Yes		Yes		Yes		Yes		Yes		Yes		Yes			
≥ 2 Panels in BWL?	Yes		Yes		Yes		Yes		Yes		Yes		Yes			
BWP 10' from Ends?	Yes		Yes		Yes		Yes		Yes		Yes		Yes			
Continuous Sheathing End Conditions	End 1	End 2	End 1	End 2	End 1	End 2	End 1	End 2	End 1	End 2	End 1	End 2	End 1	End 2		
	1	1	1	1	1	1	1	1	1	1	1	1	1	1		
BWL Compliance	PASS		PASS		PASS		PASS		PASS		PASS		PASS			

WALL BRACING/SHEAR WALL SCHEDULE

MARK	DESCRIPTION	FASTENING PATTERN
CS-PF	7/16" APA RATED OSB SHEATHING	8d COMMON NAILS (2 1/2" x 0.131") @ 6" O.C. ON EDGES & 12" O.C. IN-FIELD
CS-WSP	7/16" APA RATED OSB SHEATHING	8d COMMON NAILS (2 1/2" x 0.131") @ 6" O.C. ON EDGES & 12" O.C. IN-FIELD
GB (BOTH SIDES)	1/2" GYPSUM WALL BOARD SHEATHING	1 1/2 " GALVANIZED ROOFING NAILS OR 1 1/2" GALVANIZED STAPLES OR 1 1/4" SCREWS TYPE W OR S @ 7" O.C. ON EDGES & IN-FIELD
GB (ONE SIDE)	1/2" GYPSUM WALL BOARD SHEATHING	1 1/2 " GALVANIZED ROOFING NAILS OR 1 1/2" GALVANIZED STAPLES OR 1 1/4" SCREWS TYPE W OR S @ 7" O.C. ON EDGES & IN-FIELD
WSP	7/16" APA RATED OSB SHEATHING	8d COMMON NAILS (2 1/2" x 0.131") @ 6" O.C. ON EDGES & 12" O.C. IN-FIELD

© COPYRIGHT 2016
Structural Engineering content of this drawings are property of structBIM LLC and are issued for this project only. Any re-use or re-production of these drawings shall not be done without written consent of structBIM LLC. These drawings are to be read in conjuction with project specifications and drawings from other consultants. These drawings shall not be used as shop drawings. Do not scale drawings, use dimensions as specified.

GTM ARCHITECTS

7735 OLD GEORGETOWN ROAD
SUITE 700
BETHESDA, MD 20814
(240)333-2000
(240)333-2001 FAX
WWW.GTMARCHITECTS.COM

GTM

Seal

STATE OF MARYLAND — KRISHNA KANDEL — 40082 — PROFESSIONAL ENGINEER

Consultant

structBIM ENGINEERS
WE DESIGN....WE BIM
46400 BENEDICT DR, SUITE #211
PHONE: 703-657-4481
E-MAIL: info@structBIM.com

Project

23 HIGH STREET, LOT 2,
BROOKVILLE, MD

I certify that these documents were prepared or approved by me, and that I am a duly licensed Professional Engineer under the laws of the State of Maryland, license number 40082, Expiration Date: 02-13-2023.

Issue Description	*Date*

structBIM Project No.	21-0244
Checked By	KK
Drawn By	KK
Scale	1/4" = 1'-0"

Sheet Title
SECOND FLOOR WALL BRACING PLAN

Sheet No.

SWB2

COPYRIGHT, 2016 structBIMEngineers, LLC.
PLOTTED ON: 4/18/2022 3:02:10 PM

FILE NAME:

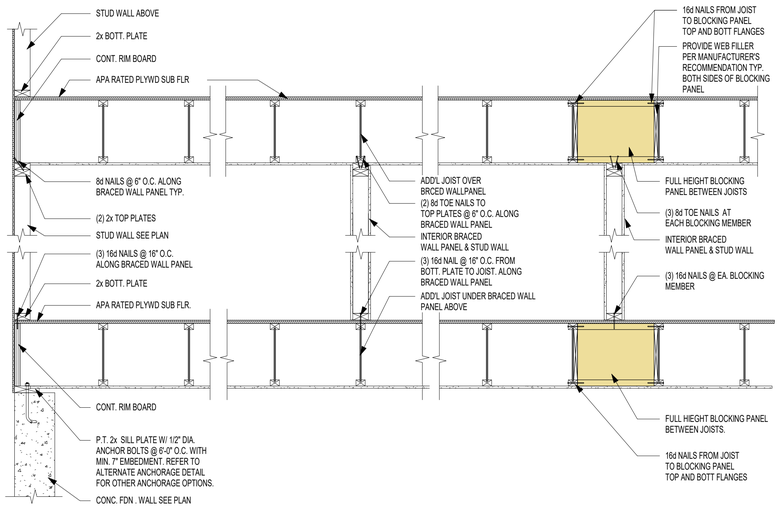

3 / SWB3 BRACED WALL PANEL PARALLEL TO I-JOISTS
SCALE: 3/4" = 1'-0"

WALL BRACING/SHEAR WALL SCHEDULE

MARK	DESCRIPTION	FASTENING PATTERN
CS-PF	7/16" APA RATED OSB SHEATHING	8d COMMON NAILS (2 1/2" x 0.131") @ 6" O.C. ON EDGES & 12" O.C. IN-FIELD
CS-WSP	7/16" APA RATED OSB SHEATHING	8d COMMON NAILS (2 1/2" x 0.131") @ 6" O.C. ON EDGES & 12" O.C. IN-FIELD
GB (BOTH SIDES)	1/2" GYPSUM WALL BOARD SHEATHING	1 1/2 " GALVANIZED ROOFING NAILS OR 1 1/2" GALVANIZED STAPLES OR 1 1/4" SCREWS TYPE W OR S @ 7" O.C. ON EDGES & IN-FIELD
GB (ONE SIDE)	1/2" GYPSUM WALL BOARD SHEATHING	1 1/2 " GALVANIZED ROOFING NAILS OR 1 1/2" GALVANIZED STAPLES OR 1 1/4" SCREWS TYPE W OR S @ 7" O.C. ON EDGES & IN-FIELD
WSP	7/16" APA RATED OSB SHEATHING	8d COMMON NAILS (2 1/2" x 0.131") @ 6" O.C. ON EDGES & 12" O.C. IN-FIELD

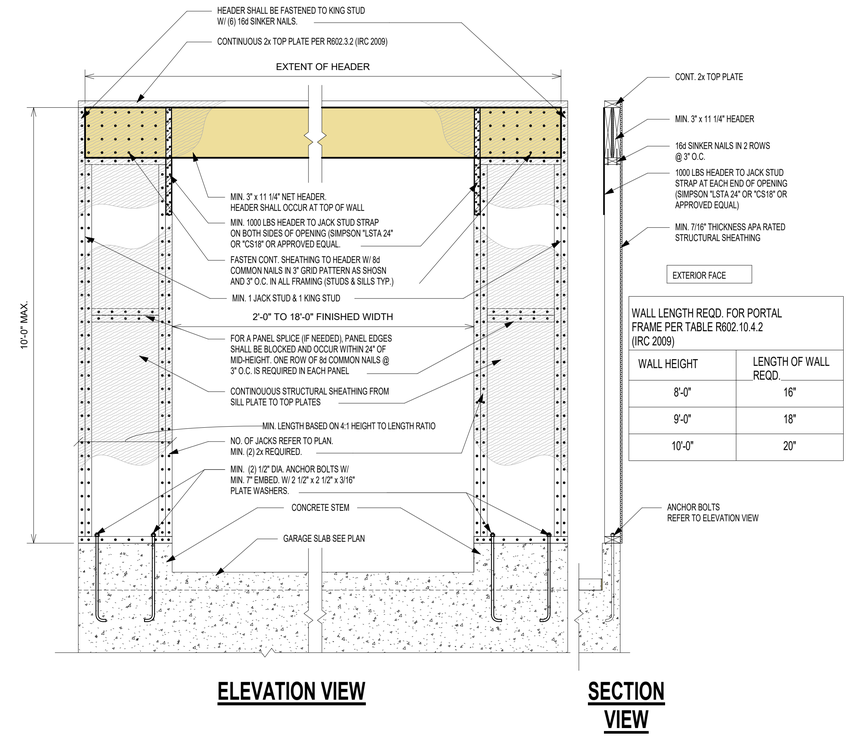

WALL LENGTH REQD. FOR PORTAL FRAME PER TABLE R602.10.4.2 (IRC 2009)

WALL HEIGHT	LENGTH OF WALL REQD.
8'-0"	16"
9'-0"	18"
10'-0"	20"

ELEVATION VIEW **SECTION VIEW**

1 / SWB3 PORTAL FRAME @ GARAGE (PFG) LEFT SIDE ONLY
SCALE: 3/4" = 1'-0"

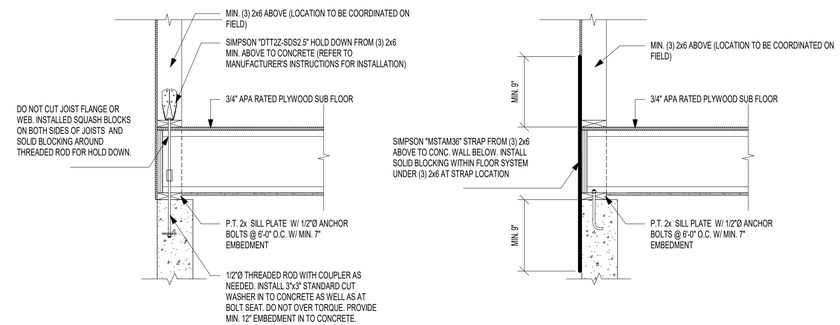

HOLD DOWN OPTION WITH SIMPSON "DTT2Z" **HOLD DOWN OPTION WITH SIMPSON "MSTAM36"**

2 / SWB3 TYP. HOLD DOWN DETAILS (APPLY AT CORNERS < 24")
SCALE: 3/4" = 1'-0"

© COPYRIGHT 2016
Structural Engineering content of this drawings are property of structBIM LLC and are issued for this project only. Any re-use or re-production of these drawings shall not be done without written consent of structBIM LLC. These drawings are to be read in conjuction with project specifications and drawings from other consultants. These drawings shall not be used as shop drawings. Do not scale drawings, use dimensions as specified.

GTM ARCHITECTS
7735 OLD GEORGETOWN ROAD
SUITE 700
BETHESDA, MD 20814
(240)333-2000
(240)333-2001 FAX
WWW.GTMARCHITECTS.COM
GTM

Seal

STATE OF MARYLAND · KEVIN CHRISTOPHER KANE · 40082 · PROFESSIONAL ENGINEER

Consultant

structBIM ENGINEERS
WE DESIGN....WE BIM
46400 BENEDICT DR, SUITE #211
PHONE: 703-657-4481
E-MAIL: info@structBIM.com

Project

23 HIGH STREET, LOT 2,
BROOKVILLE, MD

I certify that these documents were prepared or approved by me, and that I am a duly licensed Professional Engineer under the laws of the State of Maryland, license number 40082, Expiration Date: 02-13-2023.

Issue Description	*Date*

structBIM Project No.	21-0244
Checked By	KK
Drawn By	KK
Scale	3/4" = 1'-0"

Sheet Title
WALL BRACING DETAILS & SCHEDULE

Sheet No.
SWB3

COPYRIGHT, 2016 structBIMEngineers, LLC.
PLOTTED ON: 4/15/2022 3:02:31 PM

23 HIGH STREET, LOT 2
BROOKVILLE, MD 20833

PLAT DATA

ADDITION TO BROOKE GROVE
LOT 2
PARCEL 770
OLNEY 8TH ELECTION DISTRICT
MONTGOMERY COUNTY, MD

TOWN OF BROOKEVILLE:
ZONED: HISTORIC VILLAGE RESIDENTIAL

FRONT SETBACK= 15'
SIDE SETBACKS= 8'
REAR SETBACK= 40'

15,000 SF (0.344 ACRES)

BUILDING TO BE FULLY SPRINKLERED IN ACCORDANCE WITH 2018 IRC & NFPA13D

GRAPHIC SYMBOLS

- A / A-5 — SECTION SHEET NO.
- A / A-5 — SECTIONAL DETAIL SHEET NO.
- A / A-5 — DETAIL TARGET, ENLARGEMENT SHEET NO.
- N / A-12 — EXTERIOR ELEVATION SHEET NO.
- N / W / 2 / A-12 / E / S — INTERIOR ELEVATION SYMBOL DRAWING NO. SHEET NO.
- ELEV. 42.00 — DATUM ELEVATION
- 106 — ROOM NUMBER
- 4 — DOOR NUMBER
- W1 — WINDOW TYPE
- SF1 / A-6 — STOREFRONT ELEVATION
- 1 — REVISION NUMBER
- P1 — PARTITION TYPES SEE SCHEDULE
- T — TEMPERED GLASS

LIST OF DRAWINGS

001	COVER SHEET
002	SPECIFICATIONS
003	DOOR & WINDOW SCHEDULES
EC001	THERMAL ENVELOPE DIAGRAMS
EC002	THERMAL ENVELOPE DIAGRAMS
EC003	ENERGY CALCULATIONS
SITE	SITE-ZONING COMPLIANCE PLAN
A100	BASEMENT PLAN
A101	FIRST FLOOR PLAN
A102	SECOND FLOOR PLAN
A103	ROOF PLAN
A200	FRONT ELEVATION
A201	RIGHT SIDE ELEVATION
A202	REAR ELEVATION
A203	LEFT SIDE ELEVATION
A300	BUILDING SECTION
A301	BUILDING SECTION
A302	BUILDING SECTION
A303	BUILDING SECTION
A304	TYPICAL DETAILS
A305	DETAILS
A306	DETAILS
A307	DETAILS
A700	GARAGE FLOOR PLANS
A701	GARAGE ELEVATIONS
A702	GARAGE SECTIONS & DETAILS
S0	FOUNDATION PLAN
S1	FIRST FLOOR FRAMING PLAN
S2	SECOND FLOOR FRAMING PLAN
S3	ROOF FRAMING PLAN
S4	GARAGE FRAMING PLAN
SD0	FOUNDATION DETAILS
SD0.1	FOUNDATION DETAILS
SD0.1	FOUNDATION DETAILS
SD1	FRAMING DETAILS
SD2	FRAMING DETAILS
SD3	FRAMING DETAILS
SG	GENERAL NOTES
SWB1	FIRST FLOOR WALL BRACING PLAN
SWB2	SECOND FLOOR WALL BRACING PLAN
SWB3	WALL BRACING DETAILS & SCHEDULE

CALCULATIONS

BASEMENT:	
FINISHED:	1,478.9 SF
UNFINISHED:	101.8 SF
TOTAL:	1,580.7 SF
FIRST FLOOR:	1,674.5 SF
COVERED PORCHES:	229.8 SF
SECOND FLOOR:	1,578.7 SF
DETACHED GARAGE:	484 SF
TOTAL GFA:	5,547.7 SF
HOUSE FOOTPRINT:	1,925.7 SF

LOT COVERAGE:

MONTGOMERY COUNTY
LOT= 15,000 SF
15,000 SF- 6,000 SF= 9,000 SF
9,000 SF x .001= 9.0%
30%- 9%= 21% MAX COVERAGE (3,150 SF)
2,158.5 SF/ 15,000 SF= 14.4%

MATERIAL SYMBOLS

- EARTH
- CONCRETE
- STEEL
- BRICK
- FINISH WOOD
- CONCRETE MASONRY UNIT
- ROUGH LUMBER BLOCKING
- GYPSUM SHEATHING
- SLAT BOARD
- ACOUSTICAL TILE

ABBREVIATIONS

ABOVE FINISH FLOOR	AFF	EACH	EA	INTERIOR	INT	PLATE	PL	VERTICAL	VERT
ACOUSTIC	ACST	EAST	E			PLUMBING	PLMB	VESTIBULE	VEST
ADJUSTABLE	ADJ	ELECTRIC, ELECTRICAL	ELEC	JANITOR'S CLOSET	JC	PLYWOOD	PLYWD	VINYL COMPOSITE TILE	VCT
AIR CONDITIONING	A/C	ELEVATION	EL	JOINT	JT	POLYVINYL CHLORIDE	PVC	VOLTS	V
AIR HANDLING	AH	ELEVATOR	ELEV	JOIST	JST	POUND	LB		
AIR HANDLING UNIT	AHU	EMERGENCY POWER	EM	JUNCTION BOX	JB	POUNDS PER SQUARE INCH	PSI	WALLBOARD	WB
ALTERNATE	ALT	EMPTY CONDUIT	EC			PREFABRICATED	PREFAB	WELDED WIRE FABRIC	WWF
ALTERNATE CURRENT	AC	ENGINEER	ENGR	LAMINATED	LAM	PREFINISHED	PREFIN	WIDTH	W
ALUMINUM	AL	ELECTRIC WATER COOLER	EWC	LAVATORY	LAV	PRELIMINARY	PRELIM	WINDOW	WDW
AMPERES	AMP	EXHAUST	EXH	LEFT HAND	LH			WITH	W/
ANCHOR BOLT	AB	EXISTING	EX	LENGTH	L	QUARRY TILE	QT	WITHOUT	W/O
ARCHITECT	ARCH	EXPANSION	EXP	LIBRARY	LIB			WOOD	WD
AT	@	EXPANSION JOINT	EXP JT	LINEAR FEET	LF	RADIUS	RAD, R		
AVERAGE	AVG	EXTERIOR	EXT	LONG LEG HORIZONTAL	LLH	REFRIGERATOR	REF	YARD	YD
				LONG LEG VERTICAL	LLV	REINFORCING	REINF		
BEAM	BM	FAHRENHEIT	F			REQUIRED	REQD		
BOARD	BD	FEET PER MINUTE	FPM	MAINTENANCE	MAINT	RESILIENT	RES		
		FEET, FOOT	FT	MANUFACTURER	MFR	RETURN AIR	RA		
CABINET	CAB	FINISH	FIN	MASONRY	MAS	REVISION	REV		
CATALOG	CAT	FIRE EXTINGUISHER CAB.	FEC	MASONRY OPENING	MO	RIGHT HAND	RH		
CEILING	CLG	FLOOR	FL	MAXIMUM	MAX	ROOM	RM		
CENTERLINE	CL	FLUORESCENT	FLOUR	MECHANICAL	MECH	ROUGH OPENING	RO		
CERAMIC TILE	CT	FIRE RATED	FR	MEDIUM	MED				
CLOSET	CLO			MEZZANINE	MEZZ	SCHEDULE	SCHD		
COLUMN	COL	GAUGE	GA	MINIMUM	MIN	SECTION	SECT		
COMPANY	CO	GALLON	GAL	MISCELLANEOUS	MISC	SERVICE SINK	SS		
CONCRETE	CONC	GALLONS PER MINUTE	GPM	MOUNTED	MTD	SIMILAR	SIM		
CONCRETE MASONRY UNITS	CMU	GALVANIZED	GALV	MULLION	MUL	SOUND TRANSMISSION	STM		
CONFERENCE	CONF	GENERAL CONTRACTOR	GC			SPECIFICATION	SPEC		
CONTINUOUS	CONT	GROUNDED FAULT INTERUPT.	GFI	NOT IN CONTRACT	NIC	SQUARE	SQ		
CONTROL JOINT	C.J	GYPSUM	GYP	NOT TO SCALE	NTS	STANDARD	STD		
COORDINATE	COORD	GYPSUM WALLBOARD	GWB	# , NO		STAND PIPE	ST		
CORRIDOR	CORR			NUMBER		STAINLESS STEEL	SS		
CUBIC FEET	CF	HANDICAPPED	HDCP	OFFICE	OFF	STATION	STA		
CUBIC FEET PER MINUTE	CFM	HARDWARE	HDW	ON CENTER	OC	STEEL	STL		
		HARDWOOD	HDWD	OPENING	OPNG	STORAGE	STOR		
DEDICATED	DED	HEIGHT	HGT, H	OPPOSITE	OPP	STRUCTURAL	STRUCT		
DEPARTMENT	DEPT	HERTZ	HZ	OUNCE	OZ	SUSPENDED CEILING	SUSP		
DEPTH	D	HOLLOW METAL	HM	OVERALL	OA				
DETAIL	DET	HORIZONTAL	HORIZ	OVERHEAD	OH	TELEPHONE	TEL		
DIAGONAL	DIAG	HORSE POWER	HP			THICK OR THICKNESS	THK		
DIAMETER	DIA	HOT WATER HEATER	HWH	PAINTED	PTD	THRESHOLD	THRSLD		
DIMENSION	DIM	HOUR	HR	PANEL	PNL	TILE	T		
DISHWASHER	DW			PARTITION	PTM	TO BE SELECTED	TBS		
DOOR	DR	INCH	IN	PERPENDICULAR	PERP	TONGUE & GROOVE	T & G		
DOWN	DN	INFORMATION	INFO	PERSONAL COMPUTER	PC	TOP	T		
DRAWING	DWG	INSIDE DIAMETER	ID	PHASE	PH	TYPICAL	TYP		
DRINKING FOUNTAIN	DF	INSULATED, INSULATION	INSUL	PLASTIC LAMINATE	P LAM				

PROJECT INFORMATION

CLIENT/CONTRACTOR
PHIL SARDELIS
10776 TUCKER STREET
BELTSVILLE, MD 20705
240-417-5333
philsardelis@gmail.com

ARCHITECT
GTM ARCHITECTS
CONTACT: LUKE OLSON/NATE WHITE
7735 OLD GEORGETOWN ROAD
BETHESDA, MD 20814
(240) 333-2021
(240) 333-2070 FAX
lolson@gtmarchitects.com

CIVIL ENGINEER
CAS ENGINEERING
CONTACT: JARED SIMS CARHART, PD, MSE
10 SOUTH BENTZ STREET
FREDERICK, MD 21701
301-703-2346 (O)
303-217-1152 (C)
jcarhart@casengineering.com

STRUCTURAL ENGINEER
structBIM ENGINEERS
CONTACT: KAUSHAL KANSARA, P.E.
20130 LAKEVIEW CTR. PLZ.
SUITE 400
ASHBURN, VA 20147
(703) 405-9732 (C)
kaushal@structbim.com

PLANS PREPARED BASED ON THE FOLLOWING CODES:
INTERNATIONAL RESIDENTIAL CODE 2018

REVIEWED
By Michael Kyne at 2:02 pm, May 23, 2022

APPROVED
Montgomery County
Historic Preservation Commission

GTM ARCHITECTS
7735 OLD GEORGETOWN ROAD
SUITE 700
BETHESDA, MD 20814
(240)333-2000
(240)333-2001 FAX
WWW.GTMARCHITECTS.COM

Seal

STATE OF MARYLAND — LUKE C. OLSON — 3195 — ARCHITECT

I certify that these documents were prepared or approved by me, and that I am a duly licensed architect under the laws of the State of Maryland, license number 3195. Expiration Date: 12/06/2022

Consultant

Project
23 HIGH STREET
LOT 2
23 HIGH STREET, BROOKEVILLE, MD 20833

Owner

Developer

PERMIT SET	4-11-2022

Issue Description	Date

GTM Project No.	18.0320
Checked By	GTM
Drawn By	LEO/NW
Scale	AS NOTED

Sheet Title
COVER SHEET

Sheet No.
001

COPYRIGHT, 2022 GTM ARCHITECTS, INC.

FILE NAME:

REVIEWED
By Michael Kyne at 2:02 pm, May 23, 2022

APPROVED
Montgomery County
Historic Preservation Commission

SPECIFICATIONS FOR RESIDENTIAL CONSTRUCTION

The purpose of the following specifications is to establish the level of quality required for both materials and workmanship. These notes are intended as a general outline; specific and additional requirements are indicated on the drawings. Unless noted otherwise in the contract documents, all Products and Materials shall be installed in strict compliance with the manufacturer's recommendations. The contractor should also note that not all of the items mentioned below may apply to the project.

GENERAL REQUIREMENTS

1. All work shall conform to the International Residential Code (IRC), 2018 edition and all applicable sections of the Montgomery County code for single family construction and applicable building codes including (but not limited to) IECC 2018.
2. The General Contractor shall stake off area of new construction and designate trees and shrubs for removal as required. Protect all landscaping beyond the areas of construction.
3. The General Contractor shall coordinate phasing and time limits for new construction with the Owner, so as to establish an acceptable payment schedule related to the status of the project.
4. Any permits required for the project shall be obtained by the General Contractor, unless informed otherwise by the Architect that the permit has been obtained.
5. The General Contractor shall store materials and equipment in a safe and suitable place during the construction process. The Owner is not responsible for any losses of material. The contractor shall be responsible for damage to installed and (or) stored materials until substantial completion or as otherwise noted in the contract document.
6. All debris shall be periodically removed from the site so as to not create a physical or visual hazard to the Owner.
7. The General Contractor shall be licensed in Montgomery County, Maryland, and shall guarantee the project labor and materials for a period of one year after the Architect determines the work to be substantially complete, as per county laws.
8. The General Contractor shall provide competent daily supervision of the project.
9. The General Contractor shall notify the related authorities for inspection of the work as related to the specific areas required by the county.
10. The General Contractor shall Carry Workmen's Compensation Insurance for every person employed by him on the premises and shall maintain such insurance in full force during the entire time of this contract. The General Contractor shall carry Comprehensive General and Automotive Liability Insurance of $25,000 to $50,000 minimum. These requirements can be amended by the Owner if specified by the contract.
11. All drawings, specifications, and copies furnished by the Architect are the documents for the construction of this project only and shall not be used in any other circumstance.
12. The General Contractor shall carefully study the contract documents and report to the Architect any error, omission, or inconsistency they may discover.
13. The General Contractor shall provide and pay for all labor, materials, equipment, tools, machinery and other facilities and services necessary for proper execution and completion of the work, and shall guarantee no mechanic liens against the project at completion.
14. The Contract Sum is stated in the agreement and is the total amount payable by the Owner, which designates the addition, deletion, or revision to the contract. The Change Order must also designate the change in the original contract sum.
15. At least seven days before the date of each progress payment established by the agreement, the General Contractor shall submit to the Architect and Owner an itemized application designating which portion of the work has been completed.
16. The Contractor shall verify dimensions prior to construction, and all discrepancies shall be brought to the attention of the Architect so that clarifications can be made. The Contractor shall field verify all dimensions related to existing conditions. Written dimensions take precedence over scaled sizes. <u>Do not scale drawings to determine missing dimensions.</u>
17. The Contractor shall be responsible to have new utility line services (gas, electric, telephone) installed to the house connection/meter location.

DEMOLITION NOTES

1. Every care shall be taken during demolition to protect the house by means of temporary supports and braces as necessary to prevent any structural failure during removal and replacement of existing structural members.
2. Temporary walls and dust barriers shall be installed as necessary to prevent circulation of dirt and dust into portions of the house that are not part of the work.
3. All dashed walls, fixtures, windows, etc., are to be removed. See Demolition Sheets for additional information.
4. Conduct all demolition operations in compliance with applicable codes and ordinances.
5. Coordinate demolition with work of subcontractors.
6. Maintain the existing structure in a watertight condition at all times.
7. Provide the necessary enclosures to allow the owner to maintain comfortable temperatures within the occupied portions of the home during construction.

GENERAL STRUCTURAL NOTES

1. Work shall be done in accordance with the International Residential Code (IRC), 2018 Edition.
2. The design gravity live loads are as follows:
   - Roof load (snow): 30 LL + 15 DL = 45 PSF
   - Living Spaces: (1st Floor) 40 LL + 15 DL = 55 PSF
   - Sleeping Spaces: (2nd Floor) 30 LL + 15 DL = 45 PSF
   - Exterior Decks: 60 LL + 15 DL = 75 PSF
   - Live Load Deflection Limitation for floors and stairs shall be L/360
   - Live Load Deflection Limitation for roofs shall be L/240

FOUNDATIONS

1. The foundation for the structure has been designed for the assumed bearing pressure of 1,500 PSF. This is to be verified by the contractor prior to the footings being poured. It is also assumed that there is no water condition present.
2. Basement walls have been designed for an assumed equivalent fluid pressure of 55 PSF.
3. Excavations for spread footings and continuous footings shall be cleaned and hand tamped to a uniform surface.
4. Slabs on grade shall be underlaid by a minimum of 4" of granular material having a maximum aggregate size of 1.5 inches and no more than 2% fines. Prior to placing the granular material, the floor subgrade shall be properly compacted, proofrolled, free of standing water, mud, and frozen soil. Before placement of concrete, a (min. 6 mil poly) vapor barrier shall be placed on top of the granular fill and sealed to vertical foundation walls.
5. Bottoms of all exterior footings shall be 2'-6" minimum below finished grade. Footings shall project a minimum of 12" into undisturbed existing natural ground having allowable bearing capacity stated. Depths of footings subject to change if soil conditions are other than assumed.

ENERGY CONSERVATION

1. The following provisions for thermal resistance meet or exceed the requirements stipulated by the 2018 International Energy Conservation Code (IECC), climate zone 4A. These values are the minimum acceptable. See drawings for specific values required for the project.
2. Insulation

		IECC
A.	Ceiling (of uppermost story)	R-49, or R-38 continuous
B.	Vaulted Ceiling sf or 20% of total insulated ceiling area R-30 allowance	R-49 w/lesser of 500
C.	Frame walls (with storm window or double glazing)	R-20 or 13+5 (exterior)
D.	Rim Joists	Equal to wall below
E.	Floors over unheated spaces (including floor overhangs)	R-38
F.	Masonry walls (enclosed heated living areas)	R-13 or R-10 continuous
G.	Slab on grade (heated space) 24" Perimeter Insulation	R-10
H.	Windows	U-0.32 SHGC-0.40
I.	Doors	See section R402.3.4

3. Air Infiltration
   - A. Provide $\frac{1}{4}$" x 5.5" compressible sill sealer between foundation wall and all sill plates. Sill sealer shall be set such that no gaps exist at sealer butt joints.
   - B. Windows: Not exceeding three tenths (0.3) CFM of sash crack
   - C. Sliding glass doors: not exceeding three tenths (0.3) CFM per square foot of door area
   - D. Swinging doors: Not exceeding five tenths (0.5) CFM per square foot of door area. Provide 1" compressible sill sealer between foundation wall and all sill plates.
   - E. Building thermal envelopes shall be tested per IECC R402.4.1.2 and verified as having air leakage not to exceed 3 air changes per hour.
   - F. Recessed lighting in the thermal envelope shall comply with IECC R402.4.5
   - G. Systems duct and piping installation shall comply with IECC R403 including Whole-House Mechanical Ventilation system installation.

TERMITE CONTROL SOIL TREATMENT

1. Treat soil with Bayer Corporation, Premise 75, in strict accordance with manufacturer's recommendations.
2. Remove all extraneous sources of wood cellulose and other edible materials such as wood debris, tree stumps and roots, stakes, formwork, and construction waste wood from soil within and around foundations. Loosen, rake, and level soil to be treated except previously compacted areas under slabs and footings.
   - A. Slabs-on-Grade and Basement Slabs: Under ground-supported slab construction, including footings, building, slabs, and attached slabs as an overall treatment. Treat soil materials before concrete footings and slabs are placed.
   - B. Foundations: Adjacent soil including soil along the entire inside perimeter of foundation walls, along both sides of interior partition walls, around plumbing pipes and electric conduit penetrating the slab, and around interior column footers, piers, and chimney bases; also along the entire outside perimeter, from grade to bottom of footing. Avoid soil washout around footings.
   - C. Crawlspaces: Soil under and adjacent to foundations as previously indicated. Treat adjacent areas including around entrance platform, porches, and equipment bases. Apply overall treatment only where attached concrete platform and porches are on fill or ground.Crawlspaces used as plenum spaces strictly follow manufacturer's recommendedations.
   - D. Along driplines of roof overhangs without gutters.
   - E. Where condensate lines from mechanical equipment drip or drain to soil.
   - F. At plumbing penetrations through ground-supported slabs.
   - G. Other sites and locations as determined by licensed installer.

WARRANTY

Special Warranty: Manufacturer's standard form, signed by Applicator and Contractor certifying that termite control work, consisting of applied termiticide treatment, will prevent infestation of subterranean termites. If subterranean termite activity or damage is discovered during warranty period of five (5) years from Substantial Completion, re-treat soil and repair or replace damage caused by termite infestation.

CONCRETE

1. All concrete construction shall conform to the latest A.C.I. code 332 and shall comply with ACI 117, "Specifications for Tolerances for Concrete Construction and Materials" unless modified by requirements in the Contract Documents.
2. Concrete shall have natural sand fine aggregates and normal weight coarse aggregates conforming to ASTM C33, Type 1 Portland Cement conforming to ASTM 150, and shall have a minimum 28-day compressive strength (F/C) as follows:
   - F/C = 2,500 PSI for footings, interior slabs on grade (except garages) and fill in concrete blocks
   - F/C = 3,000 PSI for foundation walls exposed to weather.
   - F/C = 3,500 PSI for drives, porches, walks, steps, and garage slabs.
   - F/C = 4,000 PSI for precast concrete units.
3. All poured in place concrete exposed to weather conditions, including the garage floor, shall be air entrained by 6% of concrete volume. No calcium chloride or other admixtures shall be used except as approved in writing by the Owner.
4. Slabs on grade: except where otherwise noted, shall be min. 4" thick, reinforced with 6x6 W1.4xW1.4 WWF Lap mesh 6" in each direction. Slab shall be placed on a layer of 6 mil polyethylene, sealed to fdn. walls, over a 4" layer of washed gravel. Refer to drawings for location of thermal insulation.
5. Concrete finish: Exposed exterior steps, stoops and slabs shall first have a steel trowel finish and then a very light broom finish. Exposed interior and garage shall receive a steel trowel finish.
6. Expansion joints: Non-organic, Owner approved, expansion joint material shall be cast in place where slabs abut masonry or concrete walls to prevent bonding between the two materials.
7. Curing: Exposed concrete surfaces shall be sealed with an approved chemical curing compound within one hour of the final troweling. Curing compound label shall state that its use will not interfere with adhesion of subsequent floor finishes.
8. Reinforcing steel: Reinforcing steel for the ties shall be intermediate grade deformed billet steel conforming to ASTM spec. A615-40. All other reinforcing steel shall conform to ASTM spec. A615-60. Welded wire fabric to conform to ASTM A-185. Fabric shall be supplied in flat sheets and lapped to mesh at splices. All reinforcing shall be detailed, fabricated and installed in accordance with the latest detailing manual A.C.I. 315.
9. Reinforcement designated as "continuous" shall lap 36 bar diameters at splices unless noted otherwise.
10. Horizontal footing and walls: reinforcement shall be continuous and shall have 90 degree bends and extensions, or corner bars of equivalent size lapped 36 bar diameters, at corners and intersections.
11. Footings:
    - A. Bottom of footings shall extend a minimum of 2'-6" below any surface subject to freezing: footings shall extend at least 12" into undisturbed soil or set on controlled compacted fill. Depth of footing subject to change if soil conditions are other than assumed. Bearing value of soil is assumed to be 1,500 PSF with no water condition present. Minimum bearing value of controlled fill shall be certified by a licensed geotechnical engineer.
12. Anchor bolts: set anchor bolts or approved straps as shown. Bolts for wood sill plates shall be $\frac{1}{2}$" in diameter and project 8" into concrete; set straps or bolts 12" max from end of any plate and 6'-0" max O.C. spacing, unless shown otherwise.

MASONRY

1. Brick shall conform to ASTM C-62. Mortar shall conform to federal specifications SS-C-18IE-type II. Lay brick only when outside temperature is 45° F and rising. Protect all work from cold and frost and ensure that mortar will cure without freezing. Calcium chloride and antifreeze admixture will not be acceptable.
2. Bearing steel and wood beams shall be supported on solid masonry piers as indicated. Other structural members (lintels, etc.) shall be supported on 8" of solid masonry. All beams and lintels shall have minimum horizontal bearing of 4".
3. Anchor bolts: Set anchor bolts or approved anchor straps as required. Bolts for wood sill plates shall be $\frac{1}{2}$" diameter and project 16" into masonry. Set bolts or straps 12" max. from end of any plate.
4. CMU walls shall have horizontal wire joints reinforcement at 16" O.C. vertically, or as indicated.
5. Provide 4" solid masonry on all sides of joists or beams entering masonry party walls.
6. Brick Veneer:
   - A. Secure brick veneer with 16 GA hot-dipped zinc coated wall ties at 16" O.C. horizontally and vertically.
   - B. Provide flashing at first course above grade, at lintels, sills and elsewhere as shown. Provide $\frac{3}{16}$" diameter tube weeps or cellular plastic head joint-type weeps at 24" O.C.
   - C. Provide through-wall flashing above all unsheltered openings. Flashing shall be end-dammed at all terminations.
   - D. Install high-density polyethylene or polyester cavity drainage material, equal to "mortar net," above all flashing. Material shall be sized to fill the width of the cavity.
7. Stone Veneer:
   - A. Vapor permeable weather-resistive barriers: two-ply asphalt saturated Kraft Grade D breather type sheathing paper.
     - Basis of design is FortifiberΦ / two-ply super jumbo texΦ 60 minute
     - Reference standard; federal specification W-B-790A, Type I, Grade D, Style 2
     - Moisture vapor transmission: 35 grams minimum; ASTM E 96
     - Water resistance: 150 minutes (Professional), ASTM D 779
8. C.M.U.'s to have water repellent block admixture; 'Dry-Block' by W.R. Grace recommended.
9. Exterior mortar to have water repellent admixture.
10. Unless noted otherwise, tool all joints concave.
11. Fully bed in mortar face shells and webs of first course of CMU.
12. All masonry joints shall be fully filled with mortar, including head joints.

ADHERED MASONRY VENNER

1. The adhered Masonry Veneer (AMV) system shall be installed in compliance with IRC R703.12 and ASTM C1780 "Standard Practice for Installation Methods for Cement-based Adhered Masonry Veneer" and The Masonry Veneer Manufacturers Associations (MVMA) "Installation Guide and Detailing Options for Compliance with ASTM C1780". The cladding unit manufacturers installation recommendations are also to be followed.
2. Two separate layers of Water Resistant Barrier (WRM) shall be provided over the sheating substrate.
3. Galvanized lath shall be securely fastened to the wall structure with approved fasteners. A mortar scratch coat shall fully encapsulate the lath and have a scored surface.
4. Cladding units shall be set over a fully cured mortar scratch coat. Cladding units shall be adjusted to comply with the cladding unit manufacturers recommendations and ASTM C1780. Doors and windows shall be adjusted to provide proper operation of opening.
5. Joints shall be filled with "thumb-print hard" adhesive mortar with a slightly concave profile, unless noted otherwise. Prior to joint filling a field mock-up shall be provided for color and workmanship approval.

STEEL

1. Structural steel shall conform to ASTM A36
2. Steel beams shall conform to ASTM A572 Grade 50.
3. All steel angles, lintels, beams, columns, etc. are to be shop primed with red lead or red oxide primer or approved equal. Structural steel at or below grade shall be painted with two coats on an asphaltic base paint and protected with a minimum of 2" solid masonry or concrete.
4. For all openings or recesses in brick or brick-faced masonry walls not specifically detailed, provide one steel angle for each 4" of wall thickness. Provide lintels according to the schedule below:

Lintel	Masonry Opening	Min. Bearing
L 3-1/2 X 3-1/2 X 1/4	Up to 3'-0"	4"
L 3-1/2 X 3-1/2 X 5/16	3'-1" to 4'-0"	6"
L 4 X 3-1/2 X 1/4	4'-1" to 5'-0"	6"
L 4 X 3-1/2 X 5/16	5'-1" to 6'-0"	6"
L 5 X 3-1/2 X 5/16	6'-1" to 7'-0"	8"
L 6 X 4 X 3/8	7'-1" to 8'-0"	8"

Note: For openings greater than 8'-0", consult with Architect and Engineer.

WOOD & CARPENTRY

1. Unless otherwise noted on drawings, all structural wood members shall be #2 Southern Pine or equal, with the following combination of unit stresses:

Extreme fiber stress in bending	1,200 PSI
Compression parallel to the grain	1,000 PSI
Compression perpendicular to the grain	565 PSI
Modulus of Elasticity Shear Stress	1,500,000 PSI

   Installation Tolerance; walls - a maximum out-of-plumb limit of 1/4" in 10' vertically and horizontal in-plane misalignment of 1/8" from adjacent framing shall be achieved. Plates and floors shall be installed within a 1/4" maximum tolerance for straightness relative to the intended location.
2. Manufactured joists and trusses (if shown on drawings) must be designed and certified by a licensed engineer and submitted to the Architect and local building department for approval.
3. Roof rafters and/or trusses shall be connected at each bearing point with one prefab-90 PSI galvanized rafter tie (hurricane clip) by Simpson or approved equal. Similarly, floor joists and trusses shall be connected with one prefabricated joist hanger. Each anchor shall be 18 GA minimum thick.
4. Provide double joists under all parallel partitions, at joists that support headers, and at headers that support joists. Use joist hangers where applicable.
5. All joists and rafters shall be rigidly braced at intervals not exceeding 8'-0".
6. Double studs at header bearing, double joists and rafters at all openings according to schedule below (unless noted otherwise on drawings):
   - Double 2 x 4 Up to 3'-0"
   - Double 2 x 6 Up to 4'-0"
   - Double 2 x 8 Up to 5'-0"
   - Double 2 x 10 Up to 7'-0"
   - Double 2 x 12 Up to 8'-0"

   All double headers and joists shall be joined with a minimum of two rows of 16 d nails 12" on center.
7. Provide blocking, banding, crush blocks, stiffeners, or rim joists, as required, at joist ends.
8. Floor joists shall have a minimum bearing of 2" on framed walls. All beams shall have minimum bearing of 4" bearing on all supports. Provide moisture protection to end of beams pocketed into masonry walls.
9. Wood joists, studs, and beams shall not be cut or notched unless authorized by the Architect. Drilled holes shall be centered at mid-depth of the member and the hole diameter shall not exceed $\frac{1}{3}$ the actual depth of the member. No holes shall be drilled within 2' from the ends or within the middle $\frac{1}{3}$ of the span. Provide 4" clear between holes.
10. Existing conditions shall be verified by the Contractor. Any existing damaged wood members shall be identified and replaced by the Contractor.
11. Contractor shall be responsible for providing necessary bracing and shoring of existing members and walls while altering the structure.
12. Provide 2x4 intermediate blocking at all bearing and non-bearing partitions.
13. All plywood shall be APA span rated. Use exterior grade plywood wherever edge of face will be exposed to weather. Interior plywood exposed to weather during construction shall be Exposure I min.
    - A. Exterior wall sheathing shall be $\frac{1}{2}$" plywood unless noted otherwise.
    - B. Subflooring shall be $\frac{3}{4}$" tongue and groove plywood, glued and screwed to the floor joists as per APA recommendations.
    - C. Where spacing of roof structure members is 16" O.C., roof sheathing shall be $\frac{1}{2}$" plywood ($\frac{3}{4}$" where roofing is slate or tile). Where spacing of roof structure members is 24" O.C., roof sheathing shall be $\frac{5}{8}$" plywood ($\frac{3}{4}$" where roofing is slate or tile). Provide "H" clips at butt joints of roof sheathing.
14. MICRO-LAM L.V.L. (laminated veneer lumber) beams shall be manufactured by Trus Joist MacMillan or approved equal. Beams shall be installed according to manufacturer's recommendations. When fastening two or more beams together, provide a minimum of two rows of 16 d nails 12" on center.
15. TJI Floor Joists are to be manufactured by Trus Joist MacMillan or approved equal. Install per manufacturer's recommendations.
16. The following wood elements are to be pressure treated with preservative, bearing the AWPA standard use category label UC3B or UC4B (for ground contact):
    - A. Sill plates resting on concrete or masonry walls.
    - B. Sill plates resting on concrete slabs on grade.
    - C. Joists which enter concrete or masonry walls and have less than $\frac{1}{2}$" clearance on tops, sides, and ends.
    - D. Sleepers resting directly on concrete slabs.
    - E. Exterior porch and deck framing, decking, and stairs.
17. Fasteners, hangers, and metal accessories used in pressure treated wood construction shall be type 304 or 316 stainless steel. Treated lumber shall not be placed in contact with aluminum flashing or other aluminum components.
18. Exterior Wood Trim:
    - A. All exterior wood trim shall be clear pine or redwood.
    - B. All trim shall be primed on 6 sides (including cut ends) prior to installation.
    - C. All outside corners shall be mitered and no end grain shall be exposed to view. No butt joints will be accepted
19. Exterior Synthetic Trim shall be "AZEK," with traditional smooth surface. Fasteners, joint cement, and installation procedures shall be in accordance with manufacturer's recommendations.
20. Siding: Refer to drawings for type specified.
    - A. Cement board shall be non-asbestos fiber-cement material complying with ASTM Standard Specification C1186 Grade II, Type A. Materials shall be equal to those manufactured by James Hardie Building Products.
    - B. Wood siding and sidewall Shingles shall be kiln dried Western Red Cedar, "Clear V.G. Heart" grade for clear and transparent stain finishes, and "A Clear" grade for semi-transparent stain or opaque finishes. Semi-transparent stain or opaque finish shall be applied in strict accordance to manufacturer's recommendations; including, but not limited to, substrate preparation and primer/sealer application to all wood surfaces (6-sides). Fasteners shall generally be type 304 stainless steel, but shall be type 316 for coastal applications. Install wood siding and shingle products over "Cedar Breather" by Benjamin Obdyke Inc. and 30# felts in accordance with manufacturer's instructions. Siding installation and finishing shall be as recommended by the Western Red Cedar Lumber Association. Siding shall be sealed prior to installation, fasteners shall be concealed where possible or arranged in a uniform pattern.
21. Coordinate all floor and wall framing with ductwork. Refer to mechanical notes.
22. Folding Attic Access Ladder shall be 22 $\frac{1}{2}$" x 44" with self-trimming flange, pre-finished door panel, and gas-piston counterbalance. The door panel shall have continuous integral weatherstripping, R-10 insulation, and two key operated locking pins to draw the door tight. Ladder steps shall be pine, doweled to pine stringers. Contact Resource Conservation Technology at 410-366-1146. Additional insulation hood shall be provided to meet required insulation value per IECC R402.2.4.

DOORS AND WINDOWS

1. AWI "Custom Standard" shall apply to the workmanship, installation and finishing of wood doors and windows components.
2. The tops, bottoms, and edges of all doors shall be finished.
3. Any defects that prevent the door or window from serving its intented purpose satisfactorily shall be rejected, such as material that is crooked, warped, bowed, chatter marked, plane or tool marked, chipped, or otherwise defective.
4. Doors and windows shall be adjusted to provide proper operation of opening.

RADON DETECTION AND TREATMENT

1. The Contractor shall provide a venting system consisting of a minimum of 3" diameter ABS, PVC or equivalent gas-tight plumbing pipe inserted into the sub-slab gravel base (at all new concrete slabs). A 'T' fitting or equivalent method shall be used to ensure that the pipe opening remains with the sub-slab permeable material. The pipe shall terminate at least 12" above the high side of the roof penetration. Contractor shall coordinate location of pipe with Architect prior to installing the pipe.
2. Install, per IRC, 2018 edition, Appendix F 'Radon Control Methods.'
3. The Contractor shall provide any other measures as required by local codes.

VENTILATION

1. Where attics are indicated to be ventilated, they are to be vented in one of the following ways (refer to drawings for specifics):
   - A. Continuous ridge venting and continuous soffit venting. Ridge vent shall be by Cor-A-Vent or approved equal. Continuous screen soffit vents shall be a minimum of 2" wide. Circular louver vents between each rafter may be used at the soffit if shown on the drawings.
   - B. Screen louvers or vents with an open area equal to one square foot for every 300 square feet of attic space.
2. Provide foundation vents for all crawl spaces. Refer to drawings for locations.
3. Venting for appliances and exhaust fans:
   - A. Provide venting to the exterior as per manufacturer's recommendations for all appliances. Location of ductwork and vent on exterior shall be approved by Architect prior to installation.
   - B. Provide exhaust fans for bathrooms, etc., as shown on drawings. Location of ductwork and vent on exterior shall be approved by Architect prior to installation. Ducts within unconditioned spaces shall be insulated to prevent condensation.
4. Provide Whole-House ventilation system to comply with IECC R403.4

MOISTURE PROTECTION

1. Appropriate sealants shall be selected for each substrate depending upon location (interior or exterior), humidity, moisture conditions, and traffic conditions. Use primers as required.
2. Color of caulking shall be coordinated with adjacent materials and must be approved by Architect prior to application.
3. Joint fillers shall be used:
   - A. To control the depth of sealants in joints.
   - B. To meet the requirements for resilient separations in horizontal joints in floor, pavements, patios, sidewalks, and other light traffic areas.
4. Bond breakers shall be used to prevent adhesion to more than two surfaces.
5. Masonry foundations shall be parged to a thickness of $\frac{3}{4}$" minimum.
6. Waterproof all below grade foundation walls with a polymer-modified asphalt emulsion similar to TREMCO "TUFF-N-DRI Classic". Dry/ cured membrane thickness shall be minimum 40 mil. Installation and substrate preparation shall be per manufacturer's recommendations. Install subsurface drainage composite similar to CETCO "Aquadrain 10X" over the cured membrane with asphalt emulsion adhesive similar to Henry 111 Insulbond.
7. Footing drains shall be min. 4" in diameter and installed on the exterior of all foundations.
8. All flashing shall be installed according to the building code. An eave flashing strip of 40 mil. self-adhering rubberized asphalt sheet membrane shall be applied to extend from the edge of the roof to a point 24" min. inside the interior wall line of the structure, and at all valleys.
9. All membrane roofing to be approved by Architect prior to installation.
10. All roof shingles to be approved by Architect prior to installation.
11. Asphalt shingle roofs with slopes from 2 in 12 to 4 in 12 shall have two layers of #15 roofing felt applied in accordance with with the International Residential Code.
12. Flashing"
    - A. Through-wall and other concealed flashing shall be a composite of fiberglass fabric, 5 oz. copper and asphalt, equal to York Copper Fabric.
    - B. Exposed flashing shall be 16 oz. copper.
13. Painted aluminum drip strips shall be installed at the eave and rake edges of the roof sheathing for shingle roofs, and above window and door trim where indicated.
14. Exterior Insulation and Finish Systems (EIFS) shall be equal to Dryvit, Residential MD System, with Dryvit drainage mat installed between the secondary weather barrier and the insulation board.
15. Cedar roof shingles shall be No. 1, Blue Label, red cedar. Install over "Cedar Breather" by Benjamin Obdyke Inc. and 30# felts in accordance with manufacturer's instructions.
16. Standing seam roofing shall be 16 ounce copper with water-tight standing seams. For slopes greater than 3 in 12 provide #30 roofing felt underlayment on solid sheathing. For slopes 3 in 12 or less provide self-adhering 40 mil ice and water guard membrane over the entire area to receive standing seam roofing.

FINISHES

<u>Gypsum Wallboard:</u>

1. Gypsum wallboard shall be ASTM C-36 as follows:
   - A. Regular ($\frac{1}{2}$"): except where noted.
   - B. Water resistant ($\frac{1}{2}$"): at bathroom ceilings and walls that are not tiled.
   - C. Durock interior tile backer board ($\frac{1}{2}$"): at all surfaces that have tile.
2. Gypsum boards shall have tapered edges to accommodate joint reinforcement.
3. Provide edge corner beads, trim, taping, and joint compounds as required for the proper completion of the job. Materials shall be by U.S. Gypsum or approved equal.
4. Finishing requirements:
   - A. For typical walls and ceilings provide a Level 4 Finish as defined by the Gypsum Association.
   - B. For surfaces noted to receive semi-gloss or gloss paint provide a Level 5 Finish as defined by the Gypsum Association.

<u>Hardwood Flooring:</u>

1. Unless noted otherwise, provide wood strip flooring where shown on the drawings.
2. Wood strip flooring to be oak. Where abutting existing floor, new floor shall match existing in size and grain. Elsewhere, oak shall be "clear" grade, in accordance with the national Oak Flooring Manufacturer's Association.
3. Install flooring in strict accordance with the recommendation of the National Oak Flooring Manufacturer's Association.
4. After the floors have been sanded, the flooring contractor shall apply a minimum of four stain and urethane samples in two foot by two foot areas on the floor for the owner to review. The owner shall have a minimum of two days to make a selection.

<u>Ceramic Tile:</u>

1. Provide ceramic tile and accessories in accordance with the Tile Council of American Specifications 137.1, in colors and patterns to be specified by the owner.
2. Setting materials: comply with pertinent recommendations contained in the Tile Council of America "Handbook for Ceramic Tile Installation."
3. Installation: comply with ANSI A108.1, ANSI A108.2, and the "Handbook for Ceramic Tile Installation" of the Tile Council of America.
   - A. Extend tile into recesses and under equipment and fixtures to form a complete covering without interruptions.
   - B. Terminate tile neatly at obstruction, edges, and corners, without disruption of pattern or joint alignment.
   - C. Align joints when adjoining tiles on floor, base, trim, and walls are the same size.
   - D. Layout tile work and center the tile fields in both directions in each space or on each wall area.
4. Replacement reserve: Contractor shall furnish to the Owner one unopened box of additional tiles for future repairs and maintenance work.

<u>Carpet:</u>

1. Provide carpeting as indicated on the drawings. Refer to allowances on schedule sheet.

<u>Vinyl Tile:</u>

1. Installation of all vinyl composition tile (VCT) shall be done in a manner which conforms with:
   - ASTM E 648,
   - ASTM E 84, AND
   - ASTM E 662.
2. Replacement reserve: Contractor shall furnish Owner with one unopened box of additional tile for future repairs and maintenance.

<u>Paint:</u>

1. All paint and primers to be Benjamin Moore or approved equal. Refer to schedule for colors and types.
2. All surfaces to be painted shall receive one primer coat and two finish coats.
3. All paint shall be applied according to manufacturer's recommendations.

<u>Architectural Woodwork and Trim:</u>

1. All millwork trim and molding shall be installed accordingly to the quality of standards of the Architectural Woodwork Institute (AWI).
2. All interior trim and millwork shall conform to AWI "custom standards."
3. Flat trim shall be clear pine or approved equal.
4. All corners of trim and siding are to be mitered, except inside corners of interior running trim which shall be coped. Exposed end grains will not be accepted.
5. All millwork and trim shall be installed by craftsmen with experience in work of this type. All work shall be first class in every regard and consistent with the best practices of the trade.

FIRE AND LIFE SAFETY

1. Stairs:
   - A. 7$\frac{3}{4}$" max rise
   - B. 10" min tread
   - C. 6'-8" min head room
   - D. Height of handrails shall be continuous, 34" (min) to 38" (max) above finished stair treads. Handrails required at stairs with 3 or more risers.
   - E. Guardrails shall be 36" (min) to 42" (max) above finished floor.
2. Provide a clear window opening of 5.7 square feet with no less than 20" clear wide and 24" clear high for sleeping area. The sill of this windows shall be no more than 44" above the finished floor.
3. Provide safety glass in all exterior doors, storm doors, sliding glass doors, shower doors, and tub enclosures above and adjacent to spas and tubs and where the glass is closer than 18" to the floor and exceeds 9 square feet in area.
4. Ground metal siding.
5. Smoke detectors shall be provided on every floor, in each bedroom and in each hall outside of bedrooms, and integrated with the electrical system with battery backup.
6. If a fuel-burning appliance, fireplace, or attached garage is present, an interconnected battery back up carbon monoxide alarm or detector must be installed outside all sleeping areas <u>and</u> on all floors. If fuel-buring appliance or fireplace is present in any sleeping area, an interconnected carbon monoxide alarm or detector must also be installed <u>in</u> that room as required per local jurisdiction.
7. Flues shall be class B except solid fuel flues, which shall be class A.
8. Top of flue shall be 2'-0" above any part of structure within 10'-0" of flue.
9. Interior finish of walls and ceiling shall have a flame spread rating not greater than Class III.
10. Carpeting shall meet federal regulation DOC FF-1.
11. Prefab fireplaces shall be (U.L.) rated and installed according to manufacturer's specifications.
12. Provide outside air for combustion in all prefab and masonry fireplaces.

ELECTRICAL AND LIGHTING NOTES

1. Electrical contractor shall size and arrange all circuits in accordance with the National Electric Code as well as all local codes. Service to be upgraded as required.
2. Wall outlets are to be mounted 1'-6" above finished floor unless noted otherwise.
3. Switches are to be mounted 4'-0" above finished floor unless noted otherwise.
4. Mounting heights are to the vertical center of the equipment to the finished elevation of the floor.
5. All new switch and outlet styles are to be approved by Owner prior to installation.
6. Provide hardwired smoke detectors on all floors, located as per Montgomery County Code.
7. Electrician shall locate all fixtures, switches, outlets, etc. prior to running wiring. Owner, Architect, and Electrician to meet at a mutually agreed upon time to review locations. The purpose of which is to allow for possible relocation prior to wiring.
8. Owner is allowed to add an additional ten (10) items (switches, cable, phone, outlet, etc., or any combination) at no additional charge to the owner.
9. Contractor shall determine, based on an on-site review of existing and proposed electrical systems, whether an electrical service heavy-up will be required, and shall include the costs of all required upgrades in their Contract Amount.
10. Provide door bell, transformer, and chime for front door and where indicated. In lieu of Owner's selection otherwise, price shall be based on the following: Illuminated Button - Destination Lighting product number 15921; Transformer - 16V; Chimes - Teiber Model CTSB-or STPW-, in Owner's choice of finish. Verify all selections and mounting locations with Owner prior to purchasing.
11. Per IECC R404.1 90% of installed lighting fixtures must contain high efficacy lamps.

MECHANICAL NOTES

1. All work shall be done in accordance with the International Residential Code (IRC), 2018 Edition, as well as IECC 2018 and other local codes including a compliant Manual J load calculation/ design in accordance with ACCA recommendations.
2. Unless otherwise indicated in Contract Documents, Contractor shall be delegated to design a fully functional and performing mechanical system in accordance with applicable mechanical codes and standards. Contractor shall submit all duct layouts and air handler locations (and thermostat locations) to the Owner and the Architect for approval prior to the commencement of framing. No extras will be given for any modification required to the framing due to ductwork.
3. All exterior unit locations to be coordinated with Owner and Architect.
4. Air conditioners shall be Energy Star rated and shall have a minimum 13 SEER rating with two zones each. Gas furnaces shall have a minimum Annual Fuel Utilization Efficiency rating of 90%.
5. Equipment will be Carrier or approved equal.
6. Ductwork will be galvanized sheet metal and flex.
7. Registers and return grilles are Hart & Cooley or equal.

PLUMBING NOTES

1. All work shall be done in accordance with the International Residential Code (IRC), 2018 Edition, as well as IECC 2018 and other local codes.
2. Contractor shall provide riser diagrams as required for permit, and shall submit to the Architect proposed locations of all waste and supply lines prior to the commencement of framing. No extras will be given for any modification required to the framing due to plumbing lines. Provide cast iron at vertical waste lines.
3. Unless otherwise indicated in Contract Documents. Contractor shall be delegated to design a fully functional and performing water supply and waste system in accordance with applicable plumbing codes and standards. Install water heater and reserve tank per requirements of the house with recirculate system.
4. Provide drain pans under all water heaters and washing machines, and pipe the pan to the sanitary drain upstream of a trap.
5. Contractor shall make a count of existing and proposed fixtures to determine whether a water or sewer upgrade will be required, and shall include the costs of all required upgrades in his Contract Amount. The count of existing fixtures shall be based on an on-site inspection.
6. Provide cast iron at vertical waste lines.
7. Locate plumbing clean out plugs in bottom $\frac{1}{3}$" of wall, typical.

STEAM SHOWER

1. Wall construction: Provide ceramic tile over dryset or latex Portland cement mortar bond coat over tile backer board over Dow insulation board over 2x4 studs.
2. Ceiling construction: Same as walls, provide continuous sloped ceiling ($\frac{1}{2}$" per foot), and provide rounded inside corner tile at joint between wall and ceiling.
3. Insulate all walls, ceiling, and floor adjacent to steam shower.
4. Steam shower to be watertight, including a watertight shower door.
5. Steam Unit: "Mr. Steam model #MS-150, 6kw or approved equal. Provide the following connections: water inlet $\frac{3}{8}$" NPT, steam outlet NPT, drain $\frac{3}{8}$" NPT. Follow all manufacturer's specifications.

ROOFTOP-MOUNTED PHOTOVOLTAIC SYSTEMS

1. Structural support for all rooftop-mounted photovoltaic systems and other considerations shall comply with 2018 IRC Section R324.4

STATIONARY STORAGE BATTERY SYSTEMS

1. The installation of battery storage systems shall comply with 2018 IRC Section R327

GTM ARCHITECTS

7735 OLD GEORGETOWN ROAD
SUITE 700
BETHESDA, MD 20814
(240)333-2000
(240)333-2001 FAX
WWW.GTMARCHITECTS.COM

GTM

Seal

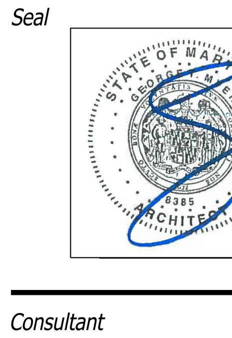

I certify that these documents were prepared or approved by me, and that I am a duly licensed architect under the laws of the State of Maryland, license number 8385, Expiration Date: 12-06-2022.

Consultant

Project
23 HIGH STREET LOT 2
23 HIGH STREET, BROOKEVILLE, MD 20833

Owner

Developer

Issue Description	Date
PERMIT SET	4-11-2022

GTM Project No.	18.0320
Checked By	GTM
Drawn By	LEO/NW
Scale	AS NOTED

Sheet Title
SPECIFICATIONS

Sheet No.
002

COPYRIGHT, 2022 GTM ARCHITECTS, INC.

REVIEWED
By Michael Kyne at 2:02 pm, May 23, 2022

APPROVED
Montgomery County
Historic Preservation Commission

DOOR SCHEDULE

DOOR				FRAME					HARDWARE	REMARKS
NO.	SIZE	MATERIAL	MANUF.	MAT:	FIN:	HEAD	JAMB	SILL		
BASEMENT										
1	3^{0} x 6^{8}	SOLID CORE MASONITE	T.B.D						H-4	
1A	1 PAIR 3^{0} x 6^{8}	SOLID CORE MASONITE	T.B.D						H-5	
2	2^{4} x 6^{8}	SOLID CORE MASONITE	T.B.D						H-3	
2A	1 PAIR 1^{6} x 6^{8}	SOLID CORE MASONITE	T.B.D						H-4	
3	2^{4} x 6^{8}	SOLID CORE MASONITE	T.B.D.						H-3	
4	2^{6} x 6^{8}	SOLID CORE MASONITE	T.B.D						H-3	
5	2^{4} x 6^{8}	SOLID CORE MASONITE	T.B.D.						H4	
6	2^{6} x 6^{8}	SOLID CORE MASONITE	T.B.D.						H-4	
7	2^{6} x 6^{8}	SOLID CORE MASONITE	T.B.D.						H-4	
7A	2^{6} x 6^{8}	SOLID CORE MASONITE	T.B.D.						H-4	
FIRST FLOOR										
7B	3^{2} x 8^{0}	WOOD & GLASS	T.B.D						H-2	PAINT GRADE W/ 15" TEMPERED SIDELIGHTS
8	2^{4} x 8^{0}	SOLID CORE MASONITE	T.B.D.						H-3	
9	2^{4} x 8^{0}	SOLID CORE MASONITE	T.B.D.						H-3	
10	1-PAIR 2^{3} x 8^{0}	SOLID CORE MASONITE	T.B.D.						H-4	
11	2^{6} x 8^{0}	SOLID CORE MASONITE	T.B.D						H-4	
12	2^{8} x 8^{0}	WOOD & GLASS	T.B.D						H-2	PAINT GRADE
13	4-PANEL 2^{10} x 8^{0}	SOLID CORE MASONITE	T.B.D.						H-2	2-PANEL SLIDING DOOR W/ MATCHING SIDELITES
SECOND FLOOR										
14	2^{6} x 7^{0}	SOLID CORE MASONITE	T.B.D.						H-3	
15	2^{6} x 7^{0}	SOLID CORE MASONITE	T.B.D.						H-3	
16	1-PAIR 2^{3} x 7^{0}	SOLID CORE MASONITE	T.B.D.						H-5	
17	2^{6} x 7^{0}	SOLID CORE MASONITE	T.B.D.						H-3	
18	2^{8} x 7^{0}	SOLID CORE MASONITE	T.B.D.						H-3	
19	2^{10} x 7^{0}	SOLID CORE MASONITE	T.B.D.						H-4	
20	2^{6} x 7^{0}	SOLID CORE MASONITE	T.B.D.						H-3	
21	2^{6} x 7^{0}	SOLID CORE MASONITE	T.B.D						H-3	
22	1 PAIR 2^{0} x 7^{0}	SOLID CORE MASONITE	T.B.D.						H-5	
23	2^{4} x 7^{0}	SOLID CORE MASONITE	T.B.D						H-3	
24	2^{4} x 7^{0}	SOLID CORE MASONITE	T.B.D.						H-4	
25	2^{4} x 7^{0}	SOLID CORE MASONITE	T.B.D.						H-4	
26	2^{4} x 7^{0}	SOLID CORE MASONITE	T.B.D.						H-4	
27	1 PAIR 1^{3} x 7^{0}	SOLID CORE MASONITE	T.B.D.						H-5	
28	2^{4} x 6^{8}	GLASS	T.B.D.						-	TEMPERED SHOWER DOOR
29	1 PAIR 2^{3} x 7^{0}	SOLID CORE MASONITE	T.B.D.						H-5	
30	2^{6} x 7^{0}	SOLID CORE MASONITE	T.B.D						H-4	
31	2^{6} x 7^{0}	SOLID CORE MASONITE	T.B.D						H-4	
DETACHED GARAGE										
31	8^{0} x 7^{6}	WOOD/GLASS	T.B.D						-	PAINT GRADE
31	8^{0} x 7^{6}	WOOD/GLASS	T.B.D						-	PAINT GRADE
32	3^{0} x 7^{0}	WOOD/GLASS	T.B.D						-	PAINT GRADE

HARDWARE SCHEDULE

NOTE: ALL HARDWARE TO BE BY SCHLAGE OR APPROVED EQUAL. (EXCEPT FRENCH DOORS, WHICH ARE TO HAVE STANDARD HARDWARE BY DOOR MANUF.)

H-1	DOUBLE CYLINDER ENTRANCE LOCK, DEADBOLT
H-2	MULTI-POINT LEVER SET BY WINDOW/DOOR MANUF.
H-3	BATH/BEDROOM PRIVACY LOCK
H-4	PASSAGE SET
H-5	BALL CATCHES $ DUMMY KNOBS
H-6	POCKET DOOR HARDWARE
H-7	FRENCH DOOR PRIVACY LOCK-FLUSH BOLT/DUMMY HANDSET COMBO

GENERAL DOOR NOTES:
1. CONFIRM HARDWARE SELECTION WITH OWNER PRIOR TO ORDERING.
2. INTERIOR DOORS TO BE SOLID CORE.
3. DOORS W/ SIDELITES SHALL HAVE 2-2x6 SPACERS BETWEEN UNLESS SHOWN OTHERWISE
4. PROVIDE SAFETY GLASS AT ALL EXTERIOR FRENCH DOORS, PER CODE
5. PROVIDE CHARCOAL SCREENING @ SCREEN DOORS
6. CONNECT GARAGE DOOR TO ALARM SYSTEM PER OWNER

GENERAL NOTES

1. ALL WINDOWS TO HAVE SCREENS (SCREEN FRAMES COLOR T.B.S.).
2. ALL WINDOWS TO BE ALUMINUM CLAD EXTERIOR, PRE-PRIMED INTERIOR.
3. CONFIRM HARDWARE FINISH W/ ARCHITECT & OWNER PRIOR TO ORDER.
4. ALL GLAZING TO BE DOUBLE PANED, LOW E, CLEAR INSULATED.
5. CONFIRM OVERALL WINDOW SCHEDULE W/ ARCHITECT PRIOR TO ORDER.
6. ALL WINDOWS & GLASS DOORS TO BE SIMULATED DIVIDED LITE, 7/8" MUNTIN.. SEE ELEVATIONS FOR MUNTIN CONFIGURATIONS
7. PROVIDE WHITE JAMB LINERS.
8. ALL EXTERIOR TRIM FOR FRAME WALL UNITS TO BE AZEK PROVIDED & INSTALLED BY G.C.
9. GANGED WINDOWS SHALL 3-2x4 SPACERS BETWEEN UNLESS SHOWN OTHERWISE
10. PROVIDE EGRESS HARDWARE IN EGRESS WINDOWS AS REQUIRED.
11. SEE ELEVATIONS FOR TYPICAL HEAD HEIGHTS ABOVE FINISHED SUBFLOOR
12. PROVIDE SAFETY GLASS AT ENTRIES, STAIRS, OVER BATHTUBS & ELSEWHERE AS REQUIRED BY CODE.

WINDOW SCHEDULE (DETACHED GARAGE)

400	DOUBLE HUNG	JELDWEN SITELINE	SCD3356	34 1/8"x 56 3/4"	INSULATED	SEE ELEVS. FOR GRILLE PATTERN	
401	DOUBLE HUNG	JELDWEN SITELINE	SCD3356	34 1/8"x 56 3/4"	INSULATED	SEE ELEVS. FOR GRILLE PATTERN	
402	DOUBLE HUNG	JELDWEN SITELINE	SCD3356	34 1/8"x 56 3/4"	INSULATED	SEE ELEVS. FOR GRILLE PATTERN	
403	DOUBLE HUNG	JELDWEN SITELINE	SCD3356	34 1/8"x 56 3/4"	INSULATED	SEE ELEVS. FOR GRILLE PATTERN	
404	DOUBLE HUNG	JELDWEN SITELINE	SCD3356	34 1/8"x 56 3/4"	INSULATED	SEE ELEVS. FOR GRILLE PATTERN	
405	FIXED CASEMENT	JELDWEN SITELINE	SCC2424	24 3/4"x 24 3/4"	INSULATED	SEE ELEVS. FOR GRILLE PATTERN	
406	FIXED CASEMENT	JELDWEN SITELINE	SCC2424	24 3/4"x 24 3/4"	INSULATED	SEE ELEVS. FOR GRILLE PATTERN	
407	FIXED CASEMENT	JELDWEN SITELINE	SCC2424	24 3/4"x 24 3/4"	INSULATED	SEE ELEVS. FOR GRILLE PATTERN	

WINDOW SCHEDULE (BASEMENT)

#	TYPE	MANUFACTURER	CAT. NO.	ROUGH OPNG.	GLASS	REMARKS	
001	DOUBLE HUNG	JELDWEN SITELINE	SCD3364	34 1/8" x 64 3/4"	INSULATED	SEE ELEVS. FOR GRILLE PATTERN	TEMPERED UNIT
002	CASEMENT	JELDWEN SITELINE	SCC3230	32 3/4"x 30 3/4"	INSULATED	SEE ELEVS. FOR GRILLE PATTERN	TEMPERED UNIT

WINDOW SCHEDULE (FIRST FLOOR)

100	DOUBLE HUNG	JELDWEN SITELINE	SCD3772	38 1/8" x 72 3/4"	INSULATED	SEE ELEVS. FOR GRILLE PATTERN	
101	DOUBLE HUNG	JELDWEN SITELINE	SCD3772	38 1/8" x 72 3/4"	INSULATED	SEE ELEVS. FOR GRILLE PATTERN	
102	DOUBLE HUNG	JELDWEN SITELINE	SCD3772	38 1/8" x 72 3/4"	INSULATED	SEE ELEVS. FOR GRILLE PATTERN	
103	DOUBLE HUNG	JELDWEN SITELINE	SCD3772	38 1/8" x 72 3/4"	INSULATED	SEE ELEVS. FOR GRILLE PATTERN	
104	DOUBLE HUNG	JELDWEN SITELINE	SCD3772	38 1/8" x 72 3/4"	INSULATED	SEE ELEVS. FOR GRILLE PATTERN	
105	DOUBLE HUNG	JELDWEN SITELINE	SCD3772	38 1/8" x 72 3/4"	INSULATED	SEE ELEVS. FOR GRILLE PATTERN	
106	DOUBLE HUNG	JELDWEN SITELINE	SCD3372	34 1/8" x 72 3/4"	INSULATED	SEE ELEVS. FOR GRILLE PATTERN	
107	DOUBLE HUNG	JELDWEN SITELINE	SCD3372	34 1/8" x 72 3/4"	INSULATED	SEE ELEVS. FOR GRILLE PATTERN	
108	DOUBLE HUNG	JELDWEN SITELINE	SCD3372	34 1/8" x 72 3/4"	INSULATED	SEE ELEVS. FOR GRILLE PATTERN	
109	DOUBLE HUNG	JELDWEN SITELINE	SCD3372	34 1/8" x 72 3/4"	INSULATED	SEE ELEVS. FOR GRILLE PATTERN	
110	DOUBLE HUNG	JELDWEN SITELINE	SCD3372	34 1/8" x 72 3/4"	INSULATED	SEE ELEVS. FOR GRILLE PATTERN	
111	DOUBLE HUNG	JELDWEN SITELINE	SCD3772	38 1/8" x 72 3/4"	INSULATED	SEE ELEVS. FOR GRILLE PATTERN	
112	DOUBLE HUNG	JELDWEN SITELINE	SCD3772	38 1/8" x 72 3/4"	INSULATED	SEE ELEVS. FOR GRILLE PATTERN	
113	DOUBLE HUNG	JELDWEN SITELINE	SCD3772	38 1/8" x 72 3/4"	INSULATED	SEE ELEVS. FOR GRILLE PATTERN	
114	DOUBLE HUNG	JELDWEN SITELINE	SCD3364	34 1/8" x 64 3/4"	INSULATED	SEE ELEVS. FOR GRILLE PATTERN	
115	DOUBLE HUNG	JELDWEN SITELINE	SCD3364	34 1/8" x 64 3/4"	INSULATED	SEE ELEVS. FOR GRILLE PATTERN	
116	CASEMENT	JELDWEN SITELINE	SCC2854-2	56 3/4"x 54 3/4"	INSULATED	SEE ELEVS. FOR GRILLE PATTERN	FRENCH CASEMENT
117	NOT USED	-	-	-	-	-	
118	DOUBLE HUNG	JELDWEN SITELINE	SCD3756	38 1/8" x 56 3/4"	INSULATED	SEE ELEVS. FOR GRILLE PATTERN	
119	DOUBLE HUNG	JELDWEN SITELINE	SCD2572	26 1/8" x 72 3/4"	INSULATED	SEE ELEVS. FOR GRILLE PATTERN	
120	DOUBLE HUNG	JELDWEN SITELINE	SCD3772	38 1/8" x 72 3/4"	INSULATED	SEE ELEVS. FOR GRILLE PATTERN	
121	DOUBLE HUNG	JELDWEN SITELINE	SCD2572	26 1/8" x 72 3/4"	INSULATED	SEE ELEVS. FOR GRILLE PATTERN	

WINDOW SCHEDULE (SECOND FLOOR)

200	DOUBLE HUNG	JELDWEN SITELINE	SCD3760	38 1/8" x 60 3/4"	INSULATED	SEE ELEVS. FOR GRILLE PATTERN	EGRESS UNIT
201	DOUBLE HUNG	JELDWEN SITELINE	SCD3760	38 1/8" x 60 3/4"	INSULATED	SEE ELEVS. FOR GRILLE PATTERN	EGRESS UNIT
202	DOUBLE HUNG	JELDWEN SITELINE	SCD3760	38 1/8" x 60 3/4"	INSULATED	SEE ELEVS. FOR GRILLE PATTERN	TEMPERED UNIT
203	DOUBLE HUNG	JELDWEN SITELINE	SCD3764	38 1/8" x 64 3/4"	INSULATED	SEE ELEVS. FOR GRILLE PATTERN	
204	CASEMENT	JELDWEN SITELINE	SCC3230	32 3/4"x 30 3/4"	INSULATED	SEE ELEVS. FOR GRILLE PATTERN	TEMPERED UNIT
205	DOUBLE HUNG	JELDWEN SITELINE	SCD3764	38 1/8" x 64 3/4"	INSULATED	SEE ELEVS. FOR GRILLE PATTERN	EGRESS UNIT
206	DOUBLE HUNG	JELDWEN SITELINE	SCD3760	38 1/8" x 60 3/4"	INSULATED	SEE ELEVS. FOR GRILLE PATTERN	
207	DOUBLE HUNG	JELDWEN SITELINE	SCD3760	38 1/8" x 60 3/4"	INSULATED	SEE ELEVS. FOR GRILLE PATTERN	
208	DOUBLE HUNG	JELDWEN SITELINE	SCD3760	38 1/8" x 60 3/4"	INSULATED	SEE ELEVS. FOR GRILLE PATTERN	EGRESS UNIT
209	DOUBLE HUNG	JELDWEN SITELINE	SCD3760	38 1/8" x 60 3/4"	INSULATED	SEE ELEVS. FOR GRILLE PATTERN	EGRESS UNIT
210	DOUBLE HUNG	JELDWEN SITELINE	SCD3160	32 1/8" x 60 3/4"	INSULATED	SEE ELEVS. FOR GRILLE PATTERN	EGRESS UNIT
211	DOUBLE HUNG	JELDWEN SITELINE	SCD3160	32 1/8" x 60 3/4"	INSULATED	SEE ELEVS. FOR GRILLE PATTERN	EGRESS UNIT
212	DOUBLE HUNG	JELDWEN SITELINE	SCD3760	38 1/8" x 60 3/4"	INSULATED	SEE ELEVS. FOR GRILLE PATTERN	EGRESS UNIT
213	DOUBLE HUNG	JELDWEN SITELINE	SCD3760	38 1/8" x 60 3/4"	INSULATED	SEE ELEVS. FOR GRILLE PATTERN	EGRESS UNIT
214	DOUBLE HUNG	JELDWEN SITELINE	SCD3760	38 1/8" x 60 3/4"	INSULATED	SEE ELEVS. FOR GRILLE PATTERN	EGRESS UNIT
215	DOUBLE HUNG	JELDWEN SITELINE	SCD3060	30 1/8" x 60 3/4"	INSULATED	SEE ELEVS. FOR GRILLE PATTERN	
216	DOUBLE HUNG	JELDWEN SITELINE	SCD3060	30 1/8" x 60 3/4"	INSULATED	SEE ELEVS. FOR GRILLE PATTERN	
217	CASEMENT	JELDWEN SITELINE	SCC2854-2	56 3/4"x 54 3/4"	INSULATED	SEE ELEVS. FOR GRILLE PATTERN	FRENCH CASEMENT
218	NOT USED	-	-	-	-	-	
219	DOUBLE HUNG	JELDWEN SITELINE	SCD3760	38 1/8" x 60 3/4"	INSULATED	SEE ELEVS. FOR GRILLE PATTERN	EGRESS UNIT
220	DOUBLE HUNG	JELDWEN SITELINE	SCD3760	38 1/8" x 60 3/4"	INSULATED	SEE ELEVS. FOR GRILLE PATTERN	EGRESS UNIT

GTM ARCHITECTS

7735 OLD GEORGETOWN ROAD
SUITE 700
BETHESDA, MD 20814
(240)333-2000
(240)333-2001 FAX
WWW.GTMARCHITECTS.COM

Seal

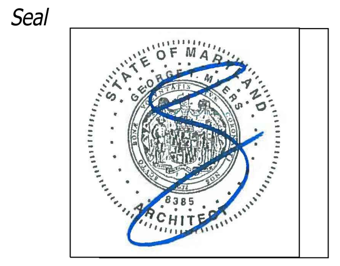

I certify that these documents were prepared or approved by me, and that I am a duly licensed architect under the laws of the State of Maryland, license number 8385, Expiration Date: 12-06-2022.

Consultant

Project
23 HIGH STREET LOT 2
23 HIGH STREET, BROOKEVILLE, MD 20833

Owner

Developer

Issue Description	Date
PERMIT SET	4-11-2022

GTM Project No. 18.0320
Checked By GTM
Drawn By LEO/NW
Scale AS NOTED

Sheet Title
DOOR & WINDOW SCHEDULES

Sheet No. 003

COPYRIGHT, 2022 GTM ARCHITECTS, INC.

FILE NAME:

GENERAL NOTES

1. Boundary information and two-foot contour data within noted "Limits of Topographic Survey" are based upon surveys performed by CAS Engineering, dated July, 2018.
2. The location of offsite trees, improvements and other structures beyond noted "Limits of Topographic Survey" are approximate. Offsite features are shown per available MNCPPC topographic records and are provided for illustrative purposes only.
3. Total lot area: Lot 2 =15,000 sq. ft. (0.344 ac.)
4. Property is located on Tax Map HU562 and WSSC 200' Sheet 227NW03.
5. Property is located on Montgomery County soils survey map number 14. Soil type(s): 1B, 1C, 6A & 16D. [Gaila silt loam, Baile silt loam & Brinklow-Blocktown channery silt loams] Hydrologic Soil Group "B" "C" & "D".
6. Flood zone "X" per F.E.M.A. Firm Maps, Community Panel Number 24031C0216D.
7. Property is located in the Hawlings River - Reddy Branch Watershed.
8. Water Category - 3, Sewer Category - 3
9. Local utilities include:
   Water / Sewer - Washington Suburban Sanitary Commission
   Electric - PEPCO
   Telephone - Verizon
   Gas - Washington Gas
10. Parcel 770 is located in the Town of Brookeville and the Brookeville Historic District.
11. This plan was created without the benefit of a title report.

TOWN OF BROOKEVILLE ZONING DATA

1. Zoning: Historic Village Residential (HVR)

Minimum Lot Area = 10,000 sq. ft.	Front B.R.L. = 15 ft.
Minimum Lot Width at R/W = 25 ft.	Rear B.R.L. = 40 ft. / 2 ft. (Accessory Structures)
Minimum Lot Width at B.R.L. = N/A	Side B.R.L. = 8 ft. / 2 ft. (Accessory Structures)

2. Verify main building height in accordance with the Town of Brookeville Zoning Ordinance.

Height of building from FF to highest point:	28.75 ft (28'-9" Per Arch.)
First floor elevation	446.50 ft
Height of building to highest point	28.75 ft
Elevation @ highest point	475.25 ft
Average elevation along front of building	443.64 ft

Height of building at highest point = 475.25 - 443.64 = 31.61 feet
Allowable height of building = 35 feet

Proposed height of building to highest point = 31.61 feet

3. Verify accessory building height in accordance with the Town of Brookeville Zoning Ordinance.

Height of building from FF to highest point:	18.77 ft (18'-9 1/4" Per Arch.)
First floor elevation	444.00 ft
Height of accessory building to highest point	18.77 ft
Elevation @ highest point	462.77 ft
Average elevation along front of building	443.25 ft

Height of accessory building at highest point = 462.77 - 443.25 = 19.52 feet
Allowable height of accessory building = 35 feet

Proposed height of accessory building to highest point = 19.52 feet

LEGEND

EXISTING FEATURES

- Ex. Sewer Manhole and Invert
- Ex. Water Line with Valve
- Ex. Gas Line with Valve
- Ex. Overhead Utility with Pole
- Ex. Two- And Ten-foot Contours
- Ex. Spot Elevation
- Ex. Canopy Line
- Ex. Tree
- Ex. Specimen Tree (DBH ≥ 30")
- Ex. Significant Tree (DBH ≥ 24")
- Ex. Tree (To Be Removed)

PROPOSED FEATURES

- Prop. Water-House Connection
- Prop. Sewer-House Connection
- Prop. Gas-House Connection
- Prop. Electric-House Connection
- Prop. Contour with Elevation
- Prop. Spot Elevation
- Prop. Surface Flow Direction
- Prop. Tree
- Prop. Streetlight

AVERAGE GRADE (ACCESSORY BUILDING)

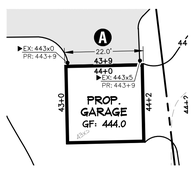

	ELEV @ POINT 1	ELEV @ POINT 2	AVERAGE GRADE	SECTION LENGTH	% LENGTH	AVERAGE GRADE x % LENGTH
Section A	443.00	443.50	443.25	22.0	100.00%	443.25

AVERAGE GRADE = 443.25

AVERAGE GRADE DETERMINATION

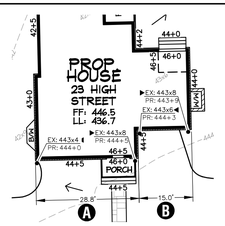

	ELEV @ POINT 1	ELEV @ POINT 2	AVERAGE GRADE	SECTION LENGTH	% LENGTH	AVERAGE GRADE x % LENGTH
Section A	443.40	443.80	443.60	28.8	65.75%	291.67
Section B	443.60	443.80	443.70	15.0	34.25%	151.97

AVERAGE GRADE = 443.64

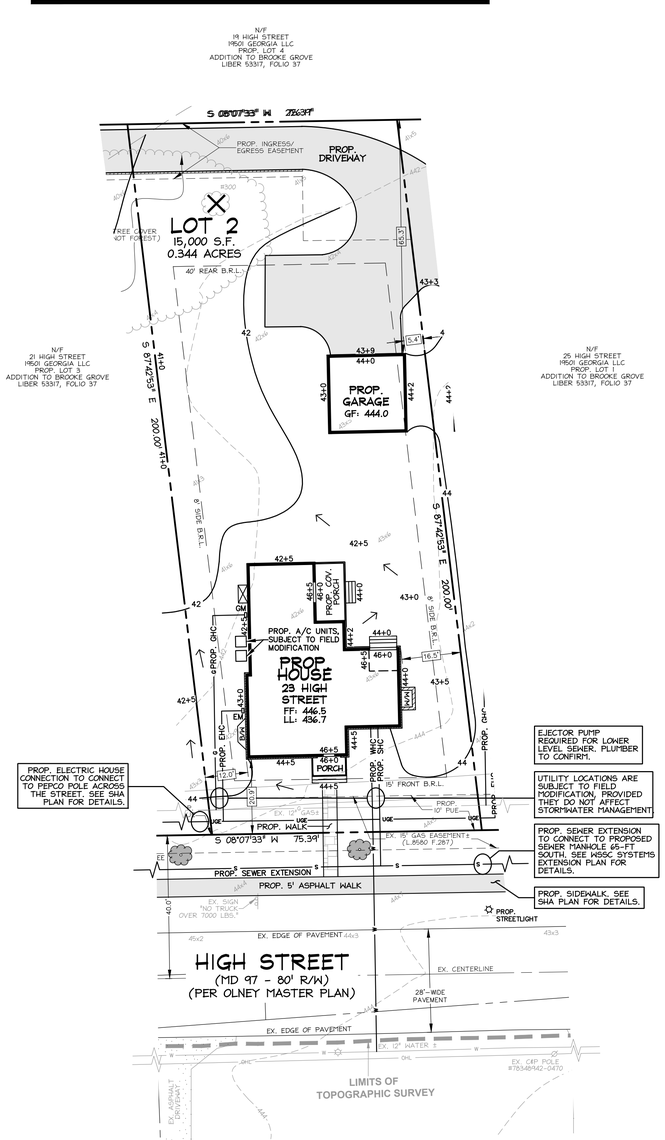

UTILITY INFORMATION

EXISTING UNDERGROUND UTILITY LOCATIONS ARE APPROXIMATE AND MUST BE FIELD VERIFIED. UTILITY LOCATIONS ARE BASED UPON AVAILABLE RECORDS AND ARE SHOWN TO THE BEST OF OUR ABILITY.

FOR LOCATION OF UTILITIES, CALL "MISS UTILITY" AT 1-800-257-7777, OR LOG ON TO WWW.MISSUTILITY.NET/ITIC 48 HOURS IN ADVANCE OF ANY WORK IN THIS VICINITY. THE EXCAVATOR MUST NOTIFY ALL PUBLIC UTILITY COMPANIES WITH UNDER GROUND FACILITIES IN THE AREA OF PROPOSED EXCAVATION AND HAVE THOSE FACILITIES LOCATED BY THE UTILITY COMPANIES PRIOR TO COMMENCING EXCAVATION. THE EXCAVATOR IS RESPONSIBLE FOR COMPLIANCE WITH REQUIREMENTS OF CHAPTER 36A OF THE MONTGOMERY COUNTY CODE.

THIS PLAN IS FOR BUILDING PERMIT APPROVAL ONLY.
SEE THE SHA DISTRICT OFFICE PERMIT PLAN FOR ADDITIONAL DETAILS.
SEE THE APPROVED SEDIMENT CONTROL PLAN FOR REQUIRED SEDIMENT CONTROL AND STORMWATER MANAGEMENT MEASURES.

CLIENT
Phillip E. Sardelis
10776 Ticker Street
Beltsville, MD 20705
philsardelis@gmail.com

ARCHITECT
GTM Architects
Attn: Luke Olson
7735 Old Georgetown Road, Suite 700
Bethesda, MD 20814
(240) 333-2021 Phone
lolson@gtmarchitects.com

23 High Street
Lot 2
Addition to Brooke Grove
Building Permit Site Plan

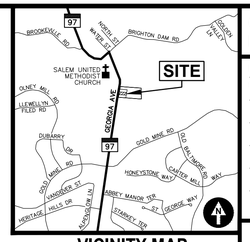

VICINITY MAP
ADC MAP 5050, GRID A-3, SCALE: 1" = 2000'

CAS JOB NO.:	16-579B
DATE:	04/2022

DATE	REVISION
04/01/22	SMF: Building Permit Site Plan to Arch for coordination.

REVIEWED
By Michael Kyne at 2:02 pm, May 23, 2022

APPROVED
Montgomery County
Historic Preservation Commission

Lot 2, Addition to Brooke Grove
Plat Pending
Olney (8th) Election District, Montgomery County, MD

23 High Street
Brookeville, Maryland 20833

CAS ENGINEERING

CAS ENGINEERING-MD
10 South Bentz Street
Frederick, Maryland 21701
301-607-8031 Phone
info@casengineering.com
www.casengineering.com

CAS ENGINEERING-DC, LLC
4836 MacArthur Boulevard, NW, 2nd Floor
Washington, DC 20007
202-393-7200 Phone
info@cas-dc.com
www.cas-dc.com

0 10 20 30 40
SCALE: 1 INCH = 20 FEET

SHEET TITLE:
Building Permit Site Plan

P:\2016\165798__23 High Street, Parcel 770\6 drawings\16579_BPSP_SCP_SWM.dwg, 4/1/2022 11:05:18 AM, smf, © 2022 CAS Engineering and CAS Engineering-DC, LLC

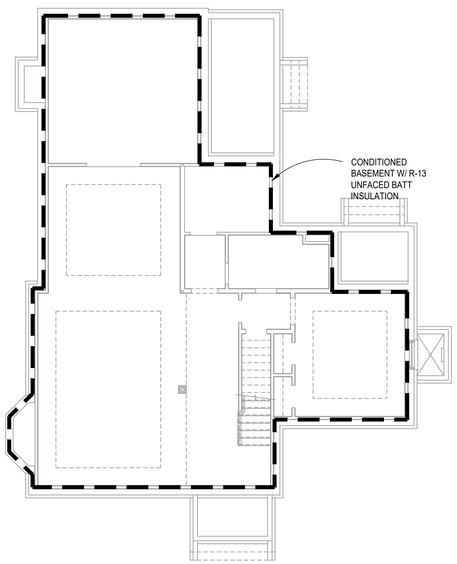

1 BASEMENT THERMAL ENVELOPE PLAN
SCALE: 1/8"=1'=0

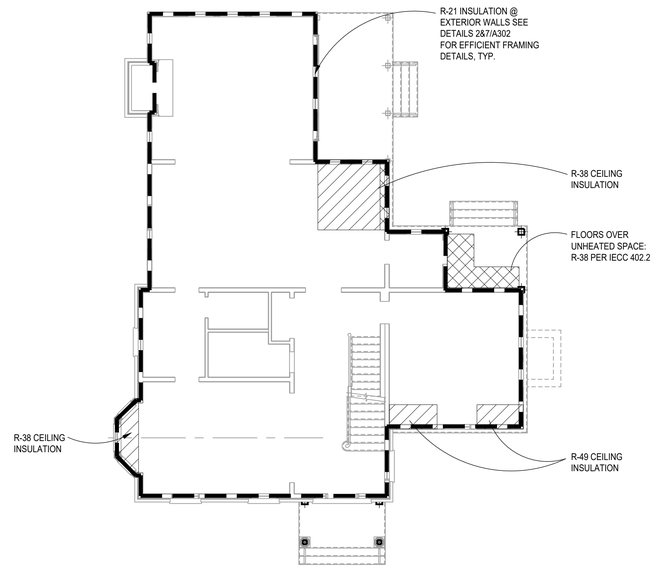

2 FIRST FLOOR THERMAL ENVELOPE PLAN
SCALE: 1/8"=1'=0

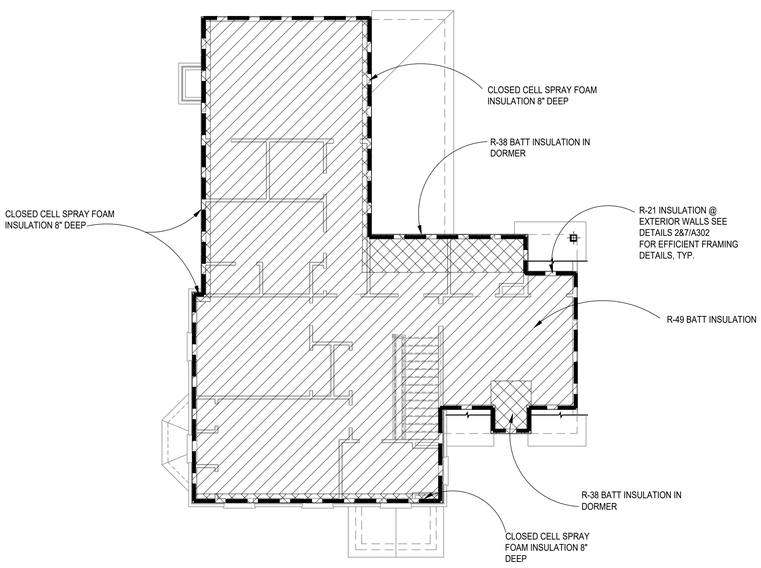

3 SECOND FLOOR THERMAL ENVELOPE PLAN
SCALE: 1/8"=1'=0

*137.9 TOTAL SQ. FT. OF PROPOSED
R-38 CEILING/ATTIC INSULATION

500 SQ. FT ALLOWED PER IECC 402.2

WINDOW/DOORS THERMAL DATA

THERMAL PERFORMACE DATA FOR DOORS & WINDOWS		
OPENING TYPE	U-VALUE	SHGC
CASEMENT WINDOWS	0.28	0.23
DOUBLE HUNG WINDOWS	0.30	0.24
FRENCH IN-SWING DOORS	0.29	0.19
CLAD SLIDING PATIO DOORS	0.30	0.25
EXTERIOR SWINGING DOORS	0.27	----

THE AREA-WEIGHTED AVERAGE MAXIMUM FENESTRATION U-FACTOR PERMITTED USING TRADE-OFFS FROM SECTION 402.1 IN ZONE 4 SHALL BE .35 FOR VERTICAL FENESTRATION AND .55 FOR SKYLITES

ENERGY CONSERVATION NOTES

1. The following provisions for thermal resistance meet or exceed the requirements stipulated by the International Energy Conservation Code.
2. INSULATION: IRC 2018

CEILING (OF UPPERMOST STORY)	R-49 W/ 500SF R-30 ALLOWANCE, OR R-38 CONTINUOUS
VAULTED CEILING	R-38
EXTERIOR FRAME WALLS	R-20 OR 13+5 (EXTERIOR)
RIM JOISTS	EQUAL TO WALL BELOW
FLOORS OVER UNHEATED SPACES (INCLUDING FLOOR OVERHANGS)	R-38
MASONRY WALLS (ENCLOSED HEATED LIVING AREAS)	R-13 OR R-10 CONTINUOUS
SLAB ON GRADE (HEATED SPACE)	
24" PERIMETER INSULATION	R-10
WINDOWS	0.32 U FACTOR, 0.40 SHGC
DOORS	SEE SECTION R402.3.4

*ALL VALUES ARE TYPICAL UNLESS NOTED OTHERWISE IN ARCHITECTURAL DRAWINGS

3. Air Infiltration:
A. Windows: not exceeding five tenths (0.5) CFM of sash crack.
B. Sliding Glass Doors: not exceeding five tenths (0.5) CFM per foot of door area.
C. Swinging Doors: not exceeding one and twenty-five hundredths (1.25) CFM per square foot of door area.
Provide 1" fiberglass sill sealer between foundation wall and all sill plates.
D. In order to seal between dissimilar materials to allow for differential expansion and contraction, the following shall be caulked, gasketed, weatherstripped or otherwise sealed with an air barrier material, suitable film or solid material:

1. All joints, seams, and penetrations
2. Site-built windows, doors, and skylites
3. Openings between window and door assemblies and their respective jambs & framing
4. Utility penetrations
5. Dropped ceilings or chases adjacent to the thermal envelope
6. Knee walls
7. Walls and ceilings separating a garage from conditioned spaces
8. Behind tubs and showers on exterior walls
9. Common walls between dwelling units
10. Attic access openings
11. Rim joist junction
12. Other sources of infiltration

HVAC SYSTEMS & WATER HEATING

1. HEATING & COOLING EQUIP. CONTROLS AT LEAST ONE PRE-PROGRAMMED THERMOSTAT IS REQUIRED WHEN USING A FORCED AIR SYSTEM. SEPARATE THERMOSTATS ARE REQUIRED FOR EACH HEATING/COOLING ZONE IN THE DWELLING.

2. DUCT INSULATION. SUPPLY DUCTS LOCATED OUTSIDE THE BUILDING THERMAL ENVELOPE SHALL BE INSULATED TO MINIMUM R-8, ALL OTHER DUCTS INSULATED TO A MINIMUM OF R-6

3. DUCT SEALING. ALL DUCTS, AIR HANDLERS, FILTER BOXES, & BUILDING CAVITIES MUST BE SEALED. JOINTS & SEAMS SHALL COMPLY W/ M1606.4.1 IRC

4. MECHANICAL SYSTEM PIPING INSULATION. R-3 FOR PIPING CARRYING FLUIDS AT >105°F OR <55°F IS REQUIRED

5. MECHANICAL VENTILATION. OUTDOOR AIR INTAKES OR EXHAUSTS SHALL HAVE DAMPERS

6. SERVICE WATER HEATING. PIPING IN THE CIRCULATING HOT WATER SYSTEM SHALL BE INSULATED TO AN R-3 AND SYSTEM TO INCLUDE MANUAL OR AUTOMATIC SWITCH THAT CAN TURN OFF THE SYSTEM WHEN IT IS NOT USED, WATER HEATERS WITH PIPE RISERS SHALL HAVE HEAT TRAPS ON BOTH INLET AND OUTLET OF WATER HEATER UNLESS THE WATER HEATER HAS INTEGRAL HEAT TRAPS OR IS PART OF A CIRCULATION SYSTEM. TYPICAL METHODS USED FOR CREATING HEAT TRAPS ARE "U" OR "RAMS HORN" BENDS IN THE FLEXIBLE PIPE CONNECTORS OR INSTALLING AFTERMARKET PIPE NIPPLES WITH INTEGRAL TRAPS.

7. EQUIPMENT SIZING. HEATING AND COOLING EQUIPMENT SHALL BE SIZED BASED ON BUILDING LOADS CALCULATED IN ACCORDANCE WITH ACCA (AIR CONDITIONING CONTRACTORS OF AMERICA) MANUAL-J, A SIMPLIFIED METHOD OF CALCULATING HEATING AND COOLING LOADS. THE MANUAL-J CALCULATIONS SHALL BE SUBMITTED UPON APPLICATION FOR THE MECHANICAL PERMIT.

SECTION 302.1 OF IECC SPECIFIES THE INTERIOR DESIGN TEMPERATURES USED FOR HEATING AND COOLING LOAD CALCULATIONS AS MAXIMUM OF 72°F FOR HEATINGAND MINIMUM 75°F FOR COOLING.

LEGEND

INSULATION PERIMETER

AREA OF INSULATION ABOVE OR BELOW AS INDICATED

REVIEWED
By Michael Kyne at 2:02 pm, May 23, 2022

APPROVED
Montgomery County
Historic Preservation Commission

GTM ARCHITECTS

7735 OLD GEORGETOWN ROAD
SUITE 700
BETHESDA, MD 20814
(240)333-2000
(240)333-2001 FAX
WWW.GTMARCHITECTS.COM

Seal

I certify that these documents were prepared or approved by me, and that I am a duly licensed architect under the laws of the State of Maryland License number 8085. Expiration Date: 06-06-2024

Consultant

Project
23 HIGH STREET LOT 2
23 HIGH STREET, BROOKEVILLE, MD 20833

Owner

Developer

PERMIT SET	4-11-2022
Issue Description	Date

GTM Project No.	18.0320
Checked By	GTM
Drawn By	LEO/NW
Scale	AS NOTED

Sheet Title
THERMAL ENVELOPE DIAGRAMS

Sheet No.
EC001

COPYRIGHT, 2022 GTM ARCHITECTS, INC.

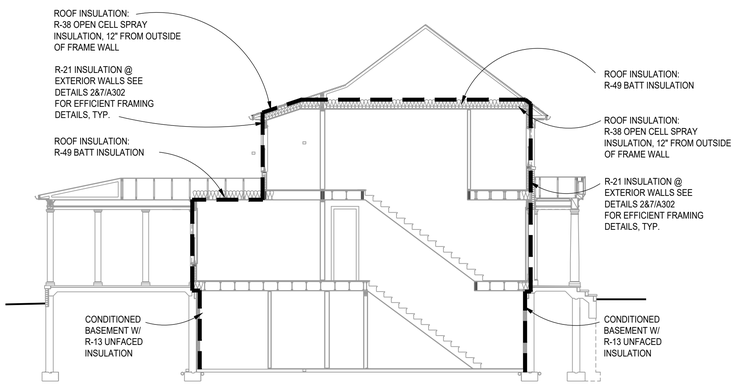

1 TYPICAL THERMAL ENVELOPE BUILDING SECTION

SCALE: 1/8"=1'=0

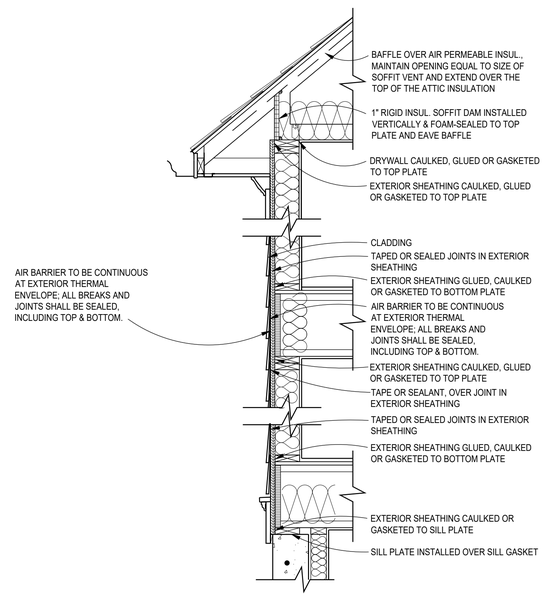

2 ENVELOPE AIR SEALING DETAIL

SCALE: 3/4"=1'-0"

WINDOW/DOORS THERMAL DATA

THERMAL PERFORMACE DATA FOR DOORS & WINDOWS		
OPENING TYPE	U-VALUE	SHGC
CASEMENT WINDOWS	0.28	0.23
DOUBLE HUNG WINDOWS	0.30	0.24
FRENCH IN-SWING DOORS	0.29	0.19
CLAD SLIDING PATIO DOORS	0.30	0.25
EXTERIOR SWINGING DOORS	0.27	----

THE AREA-WEIGHTED AVERAGE MAXIMUM FENESTRATION U-FACTOR PERMITTED USING TRADE-OFFS FROM SECTION 402.1 IN ZONE 4 SHALL BE .35 FOR VERTICAL FENESTRATION AND .55 FOR SKYLITES

ENERGY CONSERVATION NOTES

1. The following provisions for thermal resistance meet or exceed the requirements stipulated by the International Energy Conservation Code.
2. INSULATION: IRC 2018

CEILING (OF UPPERMOST STORY)	R-49 W/ 500SF R-30 ALLOWANCE, OR R-38 CONTINUOUS
VAULTED CEILING	R-38
EXTERIOR FRAME WALLS	R-20 OR 13+5 (EXTERIOR)
RIM JOISTS	EQUAL TO WALL BELOW
FLOORS OVER UNHEATED SPACES (INCLUDING FLOOR OVERHANGS)	R-38
MASONRY WALLS (ENCLOSED HEATED LIVING AREAS)	R-13 OR R-10 CONTINUOUS
SLAB ON GRADE (HEATED SPACE)	
24" PERIMETER INSULATION	R-10
WINDOWS	0.32 U FACTOR, 0.40 SHGC
DOORS	SEE SECTION R402.3.4

*ALL VALUES ARE TYPICAL UNLESS NOTED OTHERWISE IN ARCHITECTURAL DRAWINGS

3. Air Infiltration:
A. Windows: not exceeding five tenths (0.5) CFM of sash crack.
B. Sliding Glass Doors: not exceeding five tenths (0.5) CFM per foot of door area.
C. Swinging Doors: not exceeding one and twenty-five hundredths (1.25) CFM per square foot of door area.
Provide 1" fiberglass sill sealer between foundation wall and all sill plates.
D. In order to seal between dissimilar materials to allow for differential expansion and contraction, the following shall be caulked, gasketed, weatherstripped or otherwise sealed with an air barrier material, suitable film or solid material:

1. All joints, seams, and penetrations
2. Site-built windows, doors, and skylites
3. Openings between window and door assemblies and their respective jambs & framing
4. Utility penetrations
5. Dropped ceilings or chases adjacent to the thermal envelope
6. Knee walls
7. Walls and ceilings separating a garage from conditioned spaces
8. Behind tubs and showers on exterior walls
9. Common walls between dwelling units
10. Attic access openings
11. Rim joist junction
12. Other sources of infiltration

HVAC SYSTEMS & WATER HEATING

1. HEATING & COOLING EQUIP. CONTROLS AT LEAST ONE PRE-PROGRAMMED THERMOSTAT IS REQUIRED WHEN USING A FORCED AIR SYSTEM. SEPARATE THERMOSTATS ARE REQUIRED FOR EACH HEATING/COOLING ZONE IN THE DWELLING.

2. DUCT INSULATION. SUPPLY DUCTS LOCATED OUTSIDE THE BUILDING THERMAL ENVELOPE SHALL BE INSULATED TO MINIMUM R-8, ALL OTHER DUCTS INSULATED TO A MINIMUM OF R-6

3. DUCT SEALING. ALL DUCTS, AIR HANDLERS, FILTER BOXES, & BUILDING CAVITIES MUST BE SEALED. JOINTS & SEAMS SHALL COMPLY W/ M1606.4.1 IRC

4. MECHANICAL SYSTEM PIPING INSULATION. R-3 FOR PIPING CARRYING FLUIDS AT >105°F OR <55°F IS REQUIRED

5. MECHANICAL VENTILATION. OUTDOOR AIR INTAKES OR EXHAUSTS SHALL HAVE DAMPERS

6. SERVICE WATER HEATING. PIPING IN THE CIRCULATING HOT WATER SYSTEM SHALL BE INSULATED TO AN R-3 AND SYSTEM TO INCLUDE MANUAL OR AUTOMATIC SWITCH THAT CAN TURN OFF THE SYSTEM WHEN IT IS NOT USED, WATER HEATERS WITH PIPE RISERS SHALL HAVE HEAT TRAPS ON BOTH INLET AND OUTLET OF WATER HEATER UNLESS THE WATER HEATER HAS INTEGRAL HEAT TRAPS OR IS PART OF A CIRCULATION SYSTEM. TYPICAL METHODS USED FOR CREATING HEAT TRAPS ARE "U" OR "RAMS HORN" BENDS IN THE FLEXIBLE PIPE CONNECTORS OR INSTALLING AFTERMARKET PIPE NIPPLES WITH INTEGRAL TRAPS.

7. EQUIPMENT SIZING. HEATING AND COOLING EQUIPMENT SHALL BE SIZED BASED ON BUILDING LOADS CALCULATED IN ACCORDANCE WITH ACCA (AIR CONDITIONING CONTRACTORS OF AMERICA) MANUAL-J, A SIMPLIFIED METHOD OF CALCULATING HEATING AND COOLING LOADS. THE MANUAL-J CALCULATIONS SHALL BE SUBMITTED UPON APPLICATION FOR THE MECHANICAL PERMIT.

SECTION 302.1 OF IECC SPECIFIES THE INTERIOR DESIGN TEMPERATURES USED FOR HEATING AND COOLING LOAD CALCULATIONS AS MAXIMUM OF 72°F FOR HEATINGAND MINIMUM 75°F FOR COOLING.

LEGEND

INSULATION PERIMETER

AREA OF INSULATION ABOVE OR BELOW AS INDICATED

REVIEWED
By Michael Kyne at 2:02 pm, May 23, 2022

APPROVED
Montgomery County
Historic Preservation Commission

GTM ARCHITECTS

7735 OLD GEORGETOWN ROAD
SUITE 700
BETHESDA, MD 20814
(240)333-2000
(240)333-2001 FAX
WWW.GTMARCHITECTS.COM

Seal

I certify that these documents were prepared or approved by me, and that I am a duly licensed architect under the laws of the State of Maryland License number 8085. Expiration Date: 06-06-2022

Consultant

Project

23 HIGH STREET
LOT 2

23 HIGH STREET, BROOKEVILLE, MD 20833

Owner

Developer

PERMIT SET	4-11-2022
Issue Description	*Date*

GTM Project No.	18.0320
Checked By	GTM
Drawn By	LEO/NW
Scale	AS NOTED

Sheet Title

THERMAL ENVELOPE DIAGRAMS

Sheet No.

EC002

COPYRIGHT, 2022 GTM ARCHITECTS, INC.

5 4 3 2 1

D

REVIEWED
By Michael Kyne at 2:02 pm, May 23, 2022

APPROVED
Montgomery County
Historic Preservation Commission

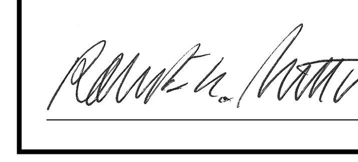

Generated by RES*check-Web* Software
Compliance Certificate

Project PARCEL 770 - LOT B

Energy Code: **2018 IECC**
Location: **Prince George's County, Maryland**
Construction Type: **Single-family**
Project Type: **New Construction**
Conditioned Floor Area: **5,248 ft2**
Glazing Area **27%**
Climate Zone: **4 (4999 HDD)**
Permit Date:
Permit Number:

Construction Site:
Owner/Agent: Maryland
Designer/Contractor: Maryland

Compliance: Passes using UA trade-off

Compliance: **5.6% Better Than Code** Maximum UA: **552** Your UA: **521** Maximum SHGC: **0.40** Your SHGC: **0.24**

The % Better or Worse Than Code Index reflects how close to compliance the house is based on code trade-off rules.
It DOES NOT provide an estimate of energy use or cost relative to a minimum-code home.

Slab-on-grade tradeoffs are no longer considered in the UA or performance compliance path in REScheck. Each slab-on-grade assembly in the specified climate zone must meet the minimum energy code insulation R-value and depth requirements.

Envelope Assemblies

Assembly	Gross Area or Perimeter	Cavity R-Value	Cont. R-Value	Prop. U-Factor	Req. U-Factor	Prop. UA	Req. UA
Floor over unheated space: Flat Ceiling or Scissor Truss	30	38.0	0.0	0.030	0.026	1	1
Eaves: Flat Ceiling or Scissor Truss	138	38.0	0.0	0.030	0.026	4	4
Ceiling: Raised or Energy Truss	1,549	49.0	0.0	0.020	0.026	31	40
Wall: Wood Frame, 16" o.c.	2,936	21.0	0.0	0.057	0.060	120	126
Door Copy: Solid Door (under 50% glazing)	49			0.270	0.320	13	16
Door: Glass Door (over 50% glazing) SHGC: 0.25	96			0.300	0.320	29	31
Windows Dbl Hung: Wood Frame SHGC: 0.24	644			0.300	0.320	193	206
Windows Casement: Wood Frame SHGC: 0.23	48			0.280	0.320	13	15
Basement Wall: Solid Concrete or Masonry Wall height: 8.8' Depth below grade: 7.0' Insulation depth: 8.8'	1,860	13.0	0.0	0.061	0.059	113	109
Window: Wood Frame SHGC: 0.24	14			0.300	0.320	4	4

Compliance Statement: The proposed building design described here is consistent with the building plans, specifications, and other calculations submitted with the permit application. The proposed building has been designed to meet the 2018 IECC requirements in RES*check* Version : REScheck-Web and to comply with the mandatory requirements listed in the RES*check* Inspection Checklist.

Name - Title Signature Date

RES*check* Software Version : REScheck-Web
Inspection Checklist

Energy Code: 2018 IECC

Requirements: 0.0% were addressed directly in the RES*check* software

Text in the "Comments/Assumptions" column is provided by the user in the REScheck Requirements screen. For each requirement, the user certifies that a code requirement will be met and how that is documented, or that an exception is being claimed. Where compliance is itemized in a separate table, a reference to that table is provided.

Section # & Req.ID	Pre-Inspection/Plan Review	Plans Verified Value	Field Verified Value	Complies?	Comments/Assumptions
103.1, 103.2 [PR1][1]	Construction drawings and documentation demonstrate energy code compliance for the building envelope. Thermal envelope represented on construction documents.			☐Complies ☐Does Not ☐Not Observable ☐Not Applicable	
103.1, 103.2, 403.7 [PR3][1]	Construction drawings and documentation demonstrate energy code compliance for lighting and mechanical systems. Systems serving multiple dwelling units must demonstrate compliance with the IECC Commercial Provisions.			☐Complies ☐Does Not ☐Not Observable ☐Not Applicable	
302.1, 403.7 [PR2][2]	Heating and cooling equipment is sized per ACCA Manual S based on loads calculated per ACCA Manual J or other methods approved by the code official.	Heating: Btu/hr_____ Cooling: Btu/hr_____	Heating: Btu/hr_____ Cooling: Btu/hr_____	☐Complies ☐Does Not ☐Not Observable ☐Not Applicable	

Additional Comments/Assumptions:

1 High Impact (Tier 1) 2 Medium Impact (Tier 2) 3 Low Impact (Tier 3)

Section # & Req.ID	Foundation Inspection	Plans Verified Value	Field Verified Value	Complies?	Comments/Assumptions
402.1.1 [FO4][1]	Conditioned basement wall insulation R-value. Where interior insulation is used, verification may need to occur during Insulation Inspection. Not required in warm-humid locations in Climate Zone 3.	R-_____ R-_____	R-_____ R-_____	☐Complies ☐Does Not ☐Not Observable ☐Not Applicable	*See the Envelope Assemblies table for values.*
303.2 [FO5][1]	Conditioned basement wall insulation installed per manufacturer's instructions.			☐Complies ☐Does Not ☐Not Observable ☐Not Applicable	
402.2.9 [FO6][1]	Conditioned basement wall insulation depth of burial or distance from top of wall.	_____ ft	_____ ft	☐Complies ☐Does Not ☐Not Observable ☐Not Applicable	*See the Envelope Assemblies table for values.*
303.2.1 [FO11][2]	A protective covering is installed to protect exposed exterior insulation and extends a minimum of 6 in. below grade.			☐Complies ☐Does Not ☐Not Observable ☐Not Applicable	
403.9 [FO12][2]	Snow- and ice-melting system controls installed.			☐Complies ☐Does Not ☐Not Observable ☐Not Applicable	

Additional Comments/Assumptions:

1 High Impact (Tier 1) 2 Medium Impact (Tier 2) 3 Low Impact (Tier 3)

Section # & Req.ID	Framing / Rough-In Inspection	Plans Verified Value	Field Verified Value	Complies?	Comments/Assumptions
402.1.1, 402.3.4 [FR1][1]	Door U-factor.	U-_____	U-_____	☐Complies ☐Does Not ☐Not Observable ☐Not Applicable	*See the Envelope Assemblies table for values.*
402.1.1, 402.3.1, 402.3.3, 402.5 [FR2][1]	Glazing U-factor (area-weighted average).	U-_____	U-_____	☐Complies ☐Does Not ☐Not Observable ☐Not Applicable	*See the Envelope Assemblies table for values.*
303.1.3 [FR4][1]	U-factors of fenestration products are determined in accordance with the NFRC test procedure or taken from the default table.			☐Complies ☐Does Not ☐Not Observable ☐Not Applicable	
402.4.1.1 [FR23][1]	Air barrier and thermal barrier installed per manufacturer's instructions.			☐Complies ☐Does Not ☐Not Observable ☐Not Applicable	
402.4.3 [FR20][1]	Fenestration that is not site built is listed and labeled as meeting AAMA /WDMA/CSA 101/I.S.2/A440 or has infiltration rates per NFRC 400 that do not exceed code limits.			☐Complies ☐Does Not ☐Not Observable ☐Not Applicable	
402.4.5 [FR16][2]	IC-rated recessed lighting fixtures sealed at housing/interior finish and labeled to indicate ≤2.0 cfm leakage at 75 Pa.			☐Complies ☐Does Not ☐Not Observable ☐Not Applicable	
403.3.1 [FR12][1]	Supply and return ducts in attics insulated >= R-8 where duct is >= 3 inches in diameter and >= R-6 where < 3 inches. Supply and return ducts in other portions of the building insulated >= R-6 for diameter >= 3 inches and R-4.2 for < 3 inches in diameter.			☐Complies ☐Does Not ☐Not Observable ☐Not Applicable	
403.3.2 [FR13][1]	Ducts, air handlers and filter boxes are sealed with joints/seams compliant with International Mechanical Code or International Residential Code, as applicable.			☐Complies ☐Does Not ☐Not Observable ☐Not Applicable	
403.3.5 [FR15][3]	Building cavities are not used as ducts or plenums.			☐Complies ☐Does Not ☐Not Observable ☐Not Applicable	
403.4 [FR17][2]	HVAC piping conveying fluids above 105 ºF or chilled fluids below 55 ºF are insulated to ≥R-3.	R-_____	R-_____	☐Complies ☐Does Not ☐Not Observable ☐Not Applicable	
403.4.1 [FR24][1]	Protection of insulation on HVAC piping.			☐Complies ☐Does Not ☐Not Observable ☐Not Applicable	
403.5.3 [FR18][2]	Hot water pipes are insulated to ≥R-3.	R-_____	R-_____	☐Complies ☐Does Not ☐Not Observable ☐Not Applicable	

1 High Impact (Tier 1) 2 Medium Impact (Tier 2) 3 Low Impact (Tier 3)

C

Section # & Req.ID	Framing / Rough-In Inspection	Plans Verified Value	Field Verified Value	Complies?	Comments/Assumptions
403.6 [FR19][2]	Automatic or gravity dampers are installed on all outdoor air intakes and exhausts.			☐Complies ☐Does Not ☐Not Observable ☐Not Applicable	

Additional Comments/Assumptions:

1 High Impact (Tier 1) 2 Medium Impact (Tier 2) 3 Low Impact (Tier 3)

B

Section # & Req.ID	Final Inspection Provisions	Plans Verified Value	Field Verified Value	Complies?	Comments/Assumptions
402.1.1, 402.2.1, 402.2.2, 402.2.6 [FI1][1]	Ceiling insulation R-value.	R-_____ ☐ Wood ☐ Steel	R-_____ ☐ Wood ☐ Steel	☐Complies ☐Does Not ☐Not Observable ☐Not Applicable	*See the Envelope Assemblies table for values.*
303.1.1.1, 303.2 [FI2][1]	Ceiling insulation installed per manufacturer's instructions. Blown insulation marked every 300 ft².			☐Complies ☐Does Not ☐Not Observable ☐Not Applicable	
402.2.3 [FI22][2]	Vented attics with air permeable insulation include baffle adjacent to soffit and eave vents that extends over insulation.			☐Complies ☐Does Not ☐Not Observable ☐Not Applicable	
402.2.4 [FI3][1]	Attic access hatch and door insulation ≥R-value of the adjacent assembly.	R-_____	R-_____	☐Complies ☐Does Not ☐Not Observable ☐Not Applicable	
402.4.1.2 [FI17][1]	Blower door test @ 50 Pa. <=5 ach in Climate Zones 1-2, and <=3 ach in Climate Zones 3-8.	ACH 50 =_____	ACH 50 =_____	☐Complies ☐Does Not ☐Not Observable ☐Not Applicable	
403.3.3 [FI27][1]	Ducts are pressure tested to determine air leakage with either: Rough-in test: Total leakage measured with a pressure differential of 0.1 inch w.g. across the system including the manufacturer's air handler enclosure if installed at time of test. Postconstruction test: Total leakage measured with a pressure differential of 0.1 inch w.g. across the entire system including the manufacturer's air handler enclosure.	_____ cfm/100 ft²	_____ cfm/100 ft²	☐Complies ☐Does Not ☐Not Observable ☐Not Applicable	
403.3.4 [FI4][1]	Duct tightness test result of <=4 cfm/100 ft2 across the system or <=3 cfm/100 ft2 without air handler @ 25 Pa. For rough-in tests, verification may need to occur during Framing Inspection.	_____ cfm/100 ft²	_____ cfm/100 ft²	☐Complies ☐Does Not ☐Not Observable ☐Not Applicable	
403.3.2.1 [FI24][1]	Air handler leakage designated by manufacturer at <=2% of design air flow.			☐Complies ☐Does Not ☐Not Observable ☐Not Applicable	
403.1.1 [FI9][2]	Programmable thermostats installed for control of primary heating and cooling systems and initially set by manufacturer to code specifications.			☐Complies ☐Does Not ☐Not Observable ☐Not Applicable	
403.1.2 [FI10][2]	Heat pump thermostat installed on heat pumps.			☐Complies ☐Does Not ☐Not Observable ☐Not Applicable	
403.5.1 [FI11][2]	Circulating service hot water systems have automatic or accessible manual controls.			☐Complies ☐Does Not ☐Not Observable ☐Not Applicable	

1 High Impact (Tier 1) 2 Medium Impact (Tier 2) 3 Low Impact (Tier 3)

Section # & Req.ID	Final Inspection Provisions	Plans Verified Value	Field Verified Value	Complies?	Comments/Assumptions
403.6.1 [FI25][2]	All mechanical ventilation system fans not part of tested and listed HVAC equipment meet efficacy and air flow limits per Table R403.6.1.			☐Complies ☐Does Not ☐Not Observable ☐Not Applicable	
403.2 [FI26][2]	Hot water boilers supplying heat through one- or two-pipe heating systems have outdoor setback control to lower boiler water temperature based on outdoor temperature.			☐Complies ☐Does Not ☐Not Observable ☐Not Applicable	
403.5.1.1 [FI28][2]	Heated water circulation systems have a circulation pump. The system return pipe is a dedicated return pipe or a cold water supply pipe. Gravity and thermos-syphon circulation systems are not present. Controls for circulating hot water system pumps start the pump with signal for hot water demand within the occupancy. Controls automatically turn off the pump when water is in circulation loop is at set-point temperature and no demand for hot water exists.			☐Complies ☐Does Not ☐Not Observable ☐Not Applicable	
403.5.1.2 [FI29][2]	Electric heat trace systems comply with IEEE 515.1 or UL 515. Controls automatically adjust the energy input to the heat tracing to maintain the desired water temperature in the piping.			☐Complies ☐Does Not ☐Not Observable ☐Not Applicable	
403.5.2 [FI30][2]	Demand recirculation water systems have controls that manage operation of the pump and limit the temperature of the water entering the cold water piping to <= 104ºF.			☐Complies ☐Does Not ☐Not Observable ☐Not Applicable	
403.5.4 [FI31][2]	Drain water heat recovery units tested in accordance with CSA B55.1. Potable water-side pressure loss of drain water heat recovery units < 3 psi for individual units connected to one or two showers. Potable water-side pressure loss of drain water heat recovery units < 2 psi for individual units connected to three or more showers.			☐Complies ☐Does Not ☐Not Observable ☐Not Applicable	
404.1 [FI6][1]	90% or more of permanent fixtures have high efficacy lamps.			☐Complies ☐Does Not ☐Not Observable ☐Not Applicable	
404.1.1 [FI23][3]	Fuel gas lighting systems have no continuous pilot light.			☐Complies ☐Does Not ☐Not Observable ☐Not Applicable	
401.3 [FI7][2]	Compliance certificate posted.			☐Complies ☐Does Not ☐Not Observable ☐Not Applicable	

1 High Impact (Tier 1) 2 Medium Impact (Tier 2) 3 Low Impact (Tier 3)

Section # & Req.ID	Final Inspection Provisions	Plans Verified Value	Field Verified Value	Complies?	Comments/Assumptions
303.3 [FI18][3]	Manufacturer manuals for mechanical and water heating systems have been provided.			☐Complies ☐Does Not ☐Not Observable ☐Not Applicable	

Additional Comments/Assumptions:

1 High Impact (Tier 1) 2 Medium Impact (Tier 2) 3 Low Impact (Tier 3)

2018 IECC Energy Efficiency Certificate

Insulation Rating	R-Value	
Above-Grade Wall	21.00	
Below-Grade Wall	13.00	
Floor	0.00	
Ceiling / Roof	49.00	
Ductwork (unconditioned spaces):	_____	
Glass & Door Rating	**U-Factor**	**SHGC**
Window	0.30	0.24
Door	0.30	0.25
Heating & Cooling Equipment	**Efficiency**	
Heating System:____________________	_____	
Cooling System:____________________	_____	
Water Heater:____________________	_____	

Name: ______________________________ **Date:**______________
Comments

A

FILE NAME:

GTM ARCHITECTS

7735 OLD GEORGETOWN ROAD
SUITE 700
BETHESDA, MD 20814
(240)333-2000
(240)333-2001 FAX
WWW.GTMARCHITECTS.COM

GTM

Seal

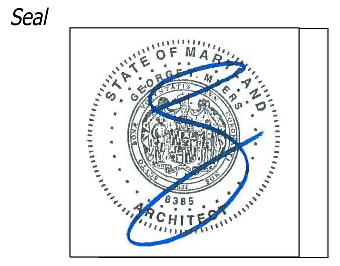

I certify that these documents were prepared or approved by me, and that I am a duly licensed architect under the laws of the State of Maryland, license number 8385, Expiration Date: 12-06-2022.

Consultant

Project
23 HIGH STREET LOT 2
23 HIGH STREET, BROOKEVILLE, MD 20833

Owner

Developer

Issue Description	Date
PERMIT SET	4-11-2022

GTM Project No. 18.0320
Checked By GTM
Drawn By LEO/NW
Scale AS NOTED

Sheet Title
ENERGY CALCS

Sheet No.
EC003

COPYRIGHT, 2022 GTM ARCHITECTS, INC.

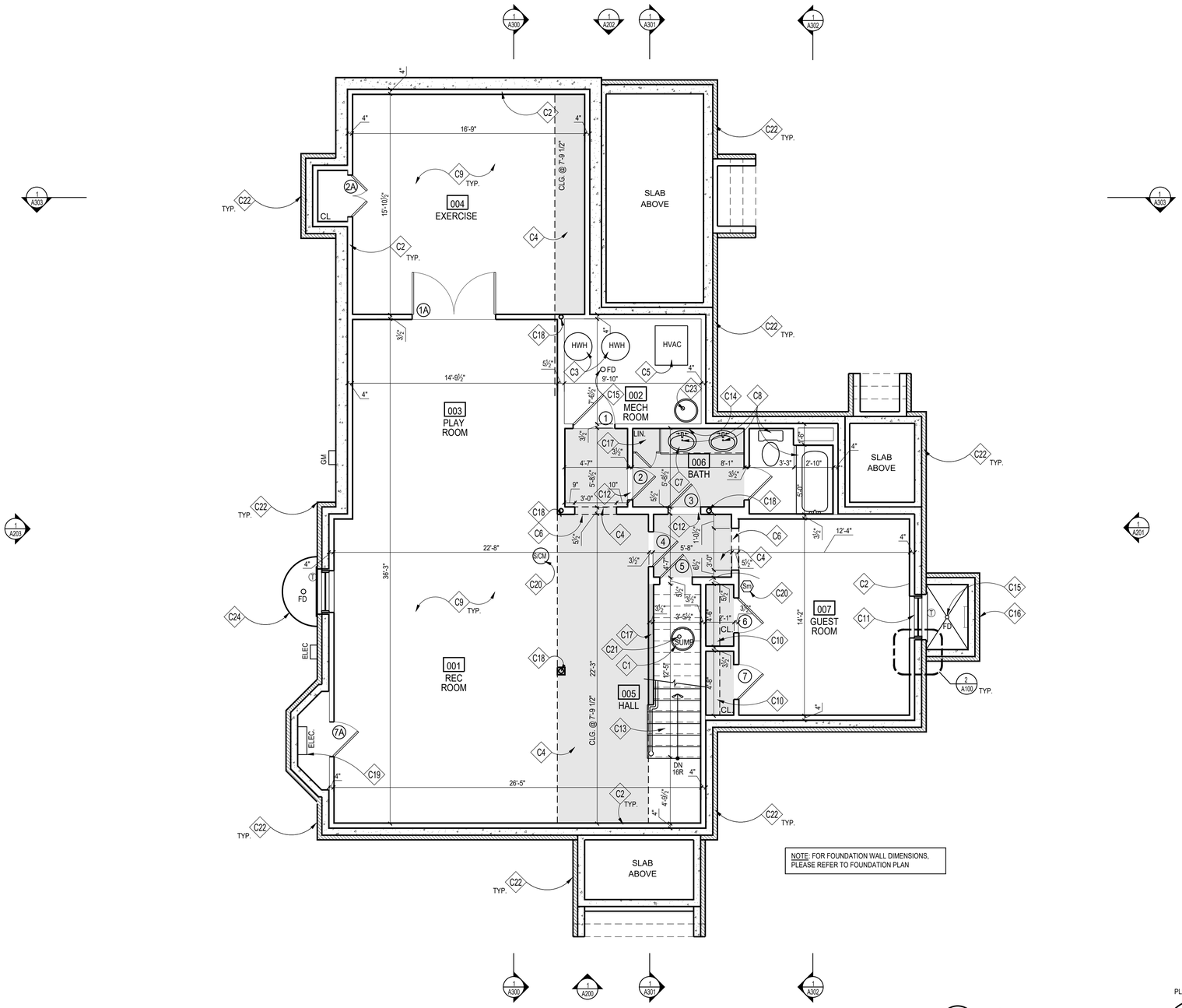

1 BASEMENT PLAN
SCALE: 1/4"=1'=0

PLAN NORTH

CONSTRUCTION NOTES

- C1 SUMP PUMP WITH WATER POWERED SUMP BACKUP; LOCATION T.B.D.
- C2 FUR OUT WALLS W/ FULL 2x4's W/ R-13 BATT INSULATION, TYP.; PROVIDE P.T. SILL; HOLD 1/2" OFF FOUNDATION WALL
- C3 HOT WATER HEATER, LOCATION APPROXIMATE, SEE SPECIFICATIONS SHEET '002'
- C4 TONED AREA INDICATES LOWERED CEILING TO ALLOW FOR DUCTWORK, BEAMS AND/OR AESTHETIC APPEAL
- C5 HVAC, SEE SPECIFICATIONS SHEET '002'
- C6 CASED OPENING @ 6'-8" FINISHED
- C7 VANITY W/ SINK, FAUCET & COUNTERTOP; T.B.S.
- C8 PLUMBING FIXTURES & ACCESSORIES T.B.S.
- C9 REINF. CONC. SLAB ON GRADE; SEE FOUNDATION PLAN
- C10 PROVIDE CLOSET ROD & SHELF
- C11 EGRESS WINDOW; MAX. 44" SILL HEIGHT FROM A.F.F.
- C12 MARBLE THRESHOLD, T.B.S.; SEE DETAIL '5/A304'
- C13 WD. STEPS; 1x RISERS W/ TREADS TO MATCH H.W.F.; WOOD RAILING T.B.S, SEE DETAILS '1&6/A304', FOLLOW IRC 2018 FOR STAIR AND RAILING
- C14 1/4" POLISHED PLATE GLASS MIRROR, T.B.S.
- C15 FLOOR DRAIN. LOCATION T.B.D., RUN TO SUMP PUMP
- C16 WINDOW WELL; EGRESS LADDER & COVER AS REQ'D. BY 2018 IRC DRAIN TO SUMP PUMP OR DAYLIGHT
- C17 (5) EQUALLY SPACED SHELVES, FLOOR TO CEILING, PTD.
- C18 STEEL COLUMN, SEE FOUNDATION AND FRAMING PLANS
- C19 APPROXIMATE ELECTRICAL PANEL LOCATION; FIELD VERIFY FINAL LOCATION
- C20 INSTALL INTERCONNECTED & HARD-WIRED SMOKE DETECTORS/ SMOKE & CARBON MONOXIDE DETECTORS IN ACCORDANCE W/ IRC 2018
- C21 RADON MITIGATION PIPE, SEE SPECIFICATIONS SHEET FOR DETAILS
- C22 BRICK VENEER TBS, SEE ELEVATIONS
- C23 EJECTOR PUMP PER CIVIL
- C24 PREFABRICATED WINDOW WELL, PROVIDE GRAVEL BASE AND DRAIN TO SUMP OR DAYLIGHT

NOTE:

1. UNLESS INDICATED OTHERWISE, DIMENSIONS ARE TO FACE OF FRAMING
2. VERIFY ALL EXTERIOR RISER + TREAD DIMENSIONS IN THE FIELD
3. SEE DETAILS '2&7/A304' FOR ENERGY EFFICIENT FRAMING DETAILS
4. PROVIDE MINERAL WOOL SOUND INSULATION IN WALLS, CEILING, + FLOOR OF THE FOLLOWING ROOMS (U.N.O.):

102	STORAGE ROOM
106	BATH

5. (T) = TEMPERED GLASS

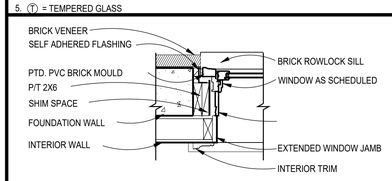

2 TYP. BASEMENT WINDOW/DOOR JAMB
Scale: 1"=1'-0"

WALL TYPES

TYPICAL NEW EXTERIOR WALL; 10" CONC. WALL; SEE FOUNDATION PLAN; FUR WHERE SHOWN WITH 2x4 STUDS @ 16" O.C.,
(SEE THERMAL ENVELOPE, SHEET "EC001" FOR INSULATION INFORMATION)

TYPICAL NON-BEARING INTERIOR PARTITION; 2"x4" STUDS 16" O.C. W/ ½" GYP. BD. EACH SIDE; INCREASE WALL THICKNESS AS SHOWN TO ALIGN FINISHES WHERE SHOWN

REVIEWED
By Michael Kyne at 2:02 pm, May 23, 2022

APPROVED
Montgomery County
Historic Preservation Commission

GTM ARCHITECTS
7735 OLD GEORGETOWN ROAD
SUITE 700
BETHESDA, MD 20814
(240)333-2000
(240)333-2001 FAX
WWW.GTMARCHITECTS.COM

Seal

I certify that these documents were prepared or approved by me, and that I am a duly licensed architect under the laws of the State of Maryland License number 8085, Expiration Date: 06-06-2024.

Consultant

Project
23 HIGH STREET LOT 2
23 HIGH STREET, BROOKEVILLE, MD 20833

Owner

Developer

PERMIT SET	4-11-2022

Issue Description	*Date*

GTM Project No.	18.0320
Checked By	GTM
Drawn By	LEO/NW
Scale	AS NOTED

Sheet Title
BASEMENT PLAN

Sheet No.
A100

COPYRIGHT, 2022 GTM ARCHITECTS, INC.

FILE NAME:

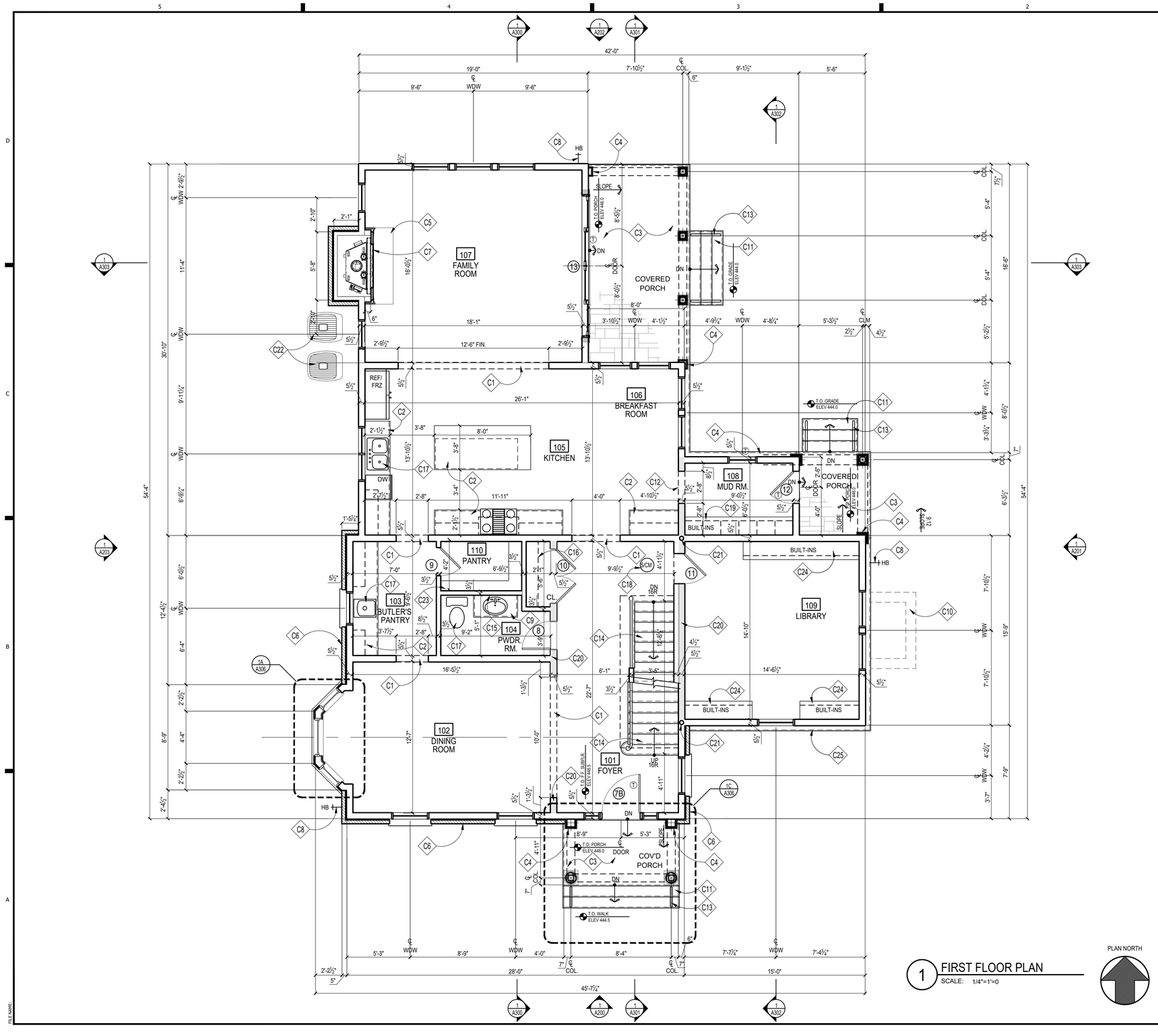

1 FIRST FLOOR PLAN
SCALE: 1/4"=1'=0

PLAN NORTH

CONSTRUCTION NOTES

- C1 CASED OPENING @ 8'-0" FINISHED
- C2 KITCHEN CABINETS, APPLIANCES + COUNTER TOPS, ETC. T.B.S.
- C3 FLAGSTONE @ PORCH, T.B.S
- C4 PTD. PILASTER TO MATCH COLUMNS; SEE ELEVATIONS
- C5 HEARTH, MATERIAL T.B.S.
- C6 BRICK VENEER TBS, SEE ELEVATIONS
- C7 B-VENT GAS FIREPLACE, T.B.S. INSTALL PER MANUFACTURER REQUIREMENTS
- C8 FROST PROOF HOSE BIB BELOW; CONFIRM LOCATION
- C9 VANITY W/ SINK, FAUCET & COUNTERTOP; T.B.S.
- C10 WINDOW WELL BELOW; SEE DETAIL '10/A304'
- C11 CONC. STAIRS TO GRADE W/ BRICK RISERS AND FLAGSTONE TREADS, T.B.S., F.V. RISE/RUN
- C12 MARBLE THRESHOLD, T.B.S.; SEE DETAIL '5/A304'
- C13 PROVIDE GUARDRAIL&HANDRAIL TO COMPLY W/ IRC 2018
- C14 WD. STEPS; 1x RISERS W/ TREADS TO MATCH H.W.F.; WOOD RAILING T.B.S, SEE DETAILS '1&6/A304', FOLLOW IRC 2018 FOR STAIR AND RAILING
- C15 1/4" POLISHED PLATE GLASS MIRROR, T.B.S.
- C16 PROVIDE CLOSET ROD & SHELF
- C17 PLUMBING FIXTURES & ACCESSORIES T.B.S.
- C18 HARD-WIRED SMOKE DETECTOR/CARBON MONOXIDE COMBO UNIT PER IRC 2018
- C19 BUILT-IN BENCH W/ LOCKERS & HOOKS, SEE DETAILS
- C20 DARKER TONED WALL INDICATES 2x6 LOAD BEARING WALL @ 16" O.C.
- C21 STEEL COLUMN, SEE FOUNDATION AND FRAMING PLANS
- C22 LOCATION OF CONDENSOR UNIT; T.B.D.
- C23 (5) EQUALLY SPACED SHELVES, FLOOR TO CEILING, PTD.
- C24 BUILT-INS; T.B.S.
- C25 NEW BRICK WATERTABLE WITH SLOPED BRICK CAP @ BASE AS SHOWN, SEE ELEVATIONS

NOTE:

1. UNLESS INDICATED OTHERWISE, DIMENSIONS ARE TO FACE OF FRAMING
2. VERIFY ALL EXTERIOR RISER + TREAD DIMENSIONS IN THE FIELD
3. SEE DETAILS '2&7/A304' FOR ENERGY EFFICIENT FRAMING DETAILS
4. PROVIDE MINERAL WOOL SOUND INSULATION IN WALLS, CEILING, + FLOOR OF THE FOLLOWING ROOMS (U.N.O.):
   104 POWDER ROOM
5. Ⓣ = TEMPERED GLASS

WALL TYPES

TYPICAL NEW EXTERIOR WALL; 2x6 WOOD STUDS 16" O.C., W/ INSULATION (SEE THERMAL ENVELOPE, SHEET "EC001" FOR INSULATION LOCATION & INFORMATION) W/ , ½" EXTERIOR SHEATHING, AIR & WATER RESISTIVE BUILDING WRAP, & SIDING; SEE ELEVATIONS. INTERIOR FINISH TO BE ½" GYP. BD.

TYPICAL NON-BEARING INTERIOR PARTITION; U.N.O. 2x4 WOOD STUDS 16" O.C. W/ ½" GYP. BD. EACH SIDE, INCREASE WALL THICKNESS AS SHOWN TO ALIGN FINISHES WHERE SHOWN

REVIEWED
By Michael Kyne at 2:02 pm, May 23, 2022

APPROVED
Montgomery County
Historic Preservation Commission

GTM ARCHITECTS
7735 OLD GEORGETOWN ROAD
SUITE 700
BETHESDA, MD 20814
(240)333-2000
(240)333-2001 FAX
WWW.GTMARCHITECTS.COM

Seal

I certify that these documents were prepared or approved by me, and that I am a duly licensed architect under the laws of the State of Maryland, license number 8385, Expiration Date: 12-06-2022.

Consultant

Project
23 HIGH STREET LOT 2
23 HIGH STREET, BROOKEVILLE, MD 20833

Owner

Developer

Issue Description	Date
PERMIT SET	4-11-2022

GTM Project No.	18.0320
Checked By	GTM
Drawn By	LEO/NW
Scale	AS NOTED

Sheet Title
FIRST FLOOR PLAN

Sheet No.
A101

COPYRIGHT, 2022 GTM ARCHITECTS, INC.

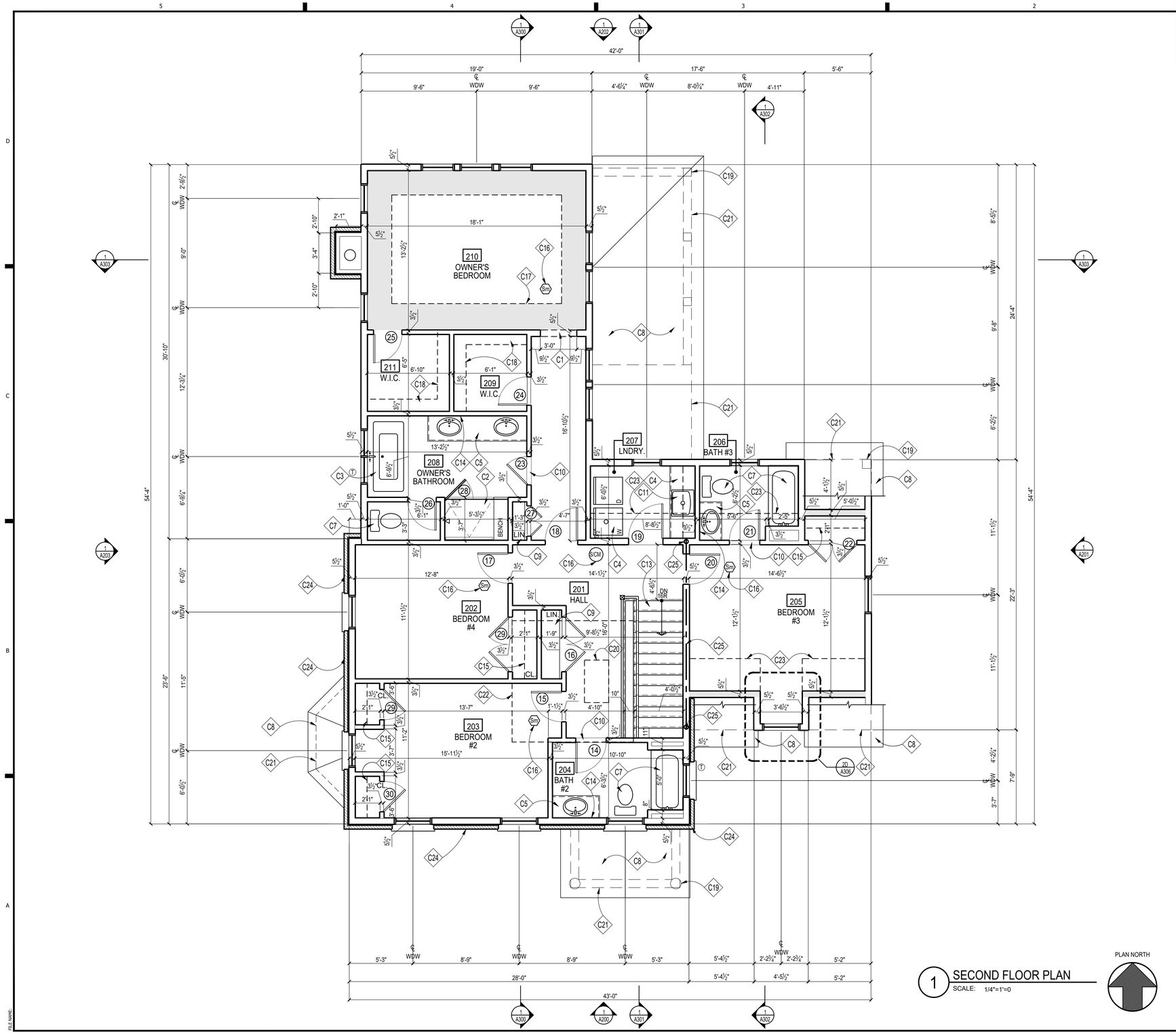

1 SECOND FLOOR PLAN
SCALE: 1/4"=1'=0

PLAN NORTH

CONSTRUCTION NOTES

- C1 CASED OPENING @ 7'-0" FINISHED
- C2 TILED SHOWER AND TILED BENCH; REFER TO DETAIL '14&15/A304', W/ TEMPERED GLASS ENCLOSURE & DOOR
- C3 FREE STANDING SOAKING TUB, T.B.S.
- C4 LAUNDRY ROOM CABINETS, APPLIANCES + COUNTER TOPS, ETC. T.B.S.; PROVIDE OVERFLOW PAN AND DRAIN UNDER WASHER
- C5 VANITY W/ SINK, FAUCET & COUNTERTOP; T.B.S.
- C6 NOT USED
- C7 PLUMBING FIXTURES & ACCESSORIES T.B.S.
- C8 ROOF BELOW; SEE ROOF PLAN
- C9 PROVIDE (5) EQUALLY SPACED SHELVES, PTD.
- C10 MARBLE THRESHOLD, T.B.S.; SEE DETAIL '5/A304'
- C11 OPTIONAL LAUNDRY SINK, T.B.S.
- C12 NOT USED
- C13 WD. STEPS; 1x RISERS W/ TREADS TO MATCH H.W.F.; WOOD RAILING T.B.S, SEE DETAILS '1&6/A304', FOLLOW IRC 2018 FOR STAIR AND RAILING
- C14 1/4" POLISHED PLATE GLASS MIRROR, T.B.S.
- C15 PROVIDE CLOSET ROD & SHELF
- C16 HARD-WIRED SMOKE DETECTOR/CARBON MONOXIDE COMBO UNIT PER IRC 2018
- C17 OPTIONAL TRAY CEILING ABOVE, COORD. W/ROOF TRUSSES
- C18 CUSTOM CLOSET SYSTEM, COORD. W/ OWNER
- C19 DASHED LINE OF COLUMN BELOW
- C20 PULL DOWN ATTIC ACCESS STAIR FRAME W/ BEAM ABOVE
- C21 DASHED LINE INDICATES OUTSIDE FACE OF BEAM
- C22 DASHED LINE INDICATES ATTIC PLATFORM ABOVE
- C23 DASHED LINE INDICATES SLOPED CEILING ABOVE
- C24 BRICK VENEER TBS, SEE ELEVATIONS
- C25 STEEL STRUCTURAL MEMBERS TO SUPPORT BRICK ABOVE

NOTE:

1. UNLESS INDICATED OTHERWISE, DIMENSIONS ARE TO FACE OF FRAMING
2. SEE DETAILS '2&7/A304' FOR ENERGY EFFICIENT FRAMING DETAILS
3. PROVIDE MINERAL WOOL SOUND INSULATION IN WALLS, CEILING, + FLOOR OF THE FOLLOWING ROOMS (U.N.O.):

207	LAUNDRY ROOM
208	OWNER'S BATH
204	BATH #2
206	BATH #3

4. Ⓣ = TEMPERED GLASS

WALL TYPES

TYPICAL NEW EXTERIOR WALL; 2x6 WOOD STUDS 16" O.C., W/ INSULATION (SEE THERMAL ENVELOPE, SHEET "EC001" FOR INSULATION LOCATION & INFORMATION) W/ , ½" EXTERIOR SHEATHING, AIR & WATER RESISTIVE BUILDING WRAP, & SIDING; SEE ELEVATIONS. INTERIOR FINISH TO BE ½" GYP. BD.

TYPICAL NON-BEARING INTERIOR PARTITION; U.N.O. 2x4 WOOD STUDS 16" O.C. W/ ½" GYP. BD. EACH SIDE, INCREASE WALL THICKNESS AS SHOWN TO ALIGN FINISHES WHERE SHOWN

REVIEWED
By Michael Kyne at 2:02 pm, May 23, 2022

APPROVED
Montgomery County
Historic Preservation Commission

GTM ARCHITECTS

7735 OLD GEORGETOWN ROAD
SUITE 700
BETHESDA, MD 20814
(240)333-2000
(240)333-2001 FAX
WWW.GTMARCHITECTS.COM

Seal

I certify that these documents were prepared or approved by me, and that I am a duly licensed architect under the laws of the State of Maryland, license number 8385, Expiration Date: 12-06-2022.

Consultant

Project
23 HIGH STREET LOT 2
23 HIGH STREET, BROOKEVILLE, MD 20833

Owner

Developer

PERMIT SET	4-11-2022
Issue Description	Date

GTM Project No.	18.0320
Checked By	GTM
Drawn By	LEO/NW
Scale	AS NOTED

Sheet Title
SECOND FLOOR PLAN

Sheet No.
A102

COPYRIGHT, 2022 GTM ARCHITECTS, INC.

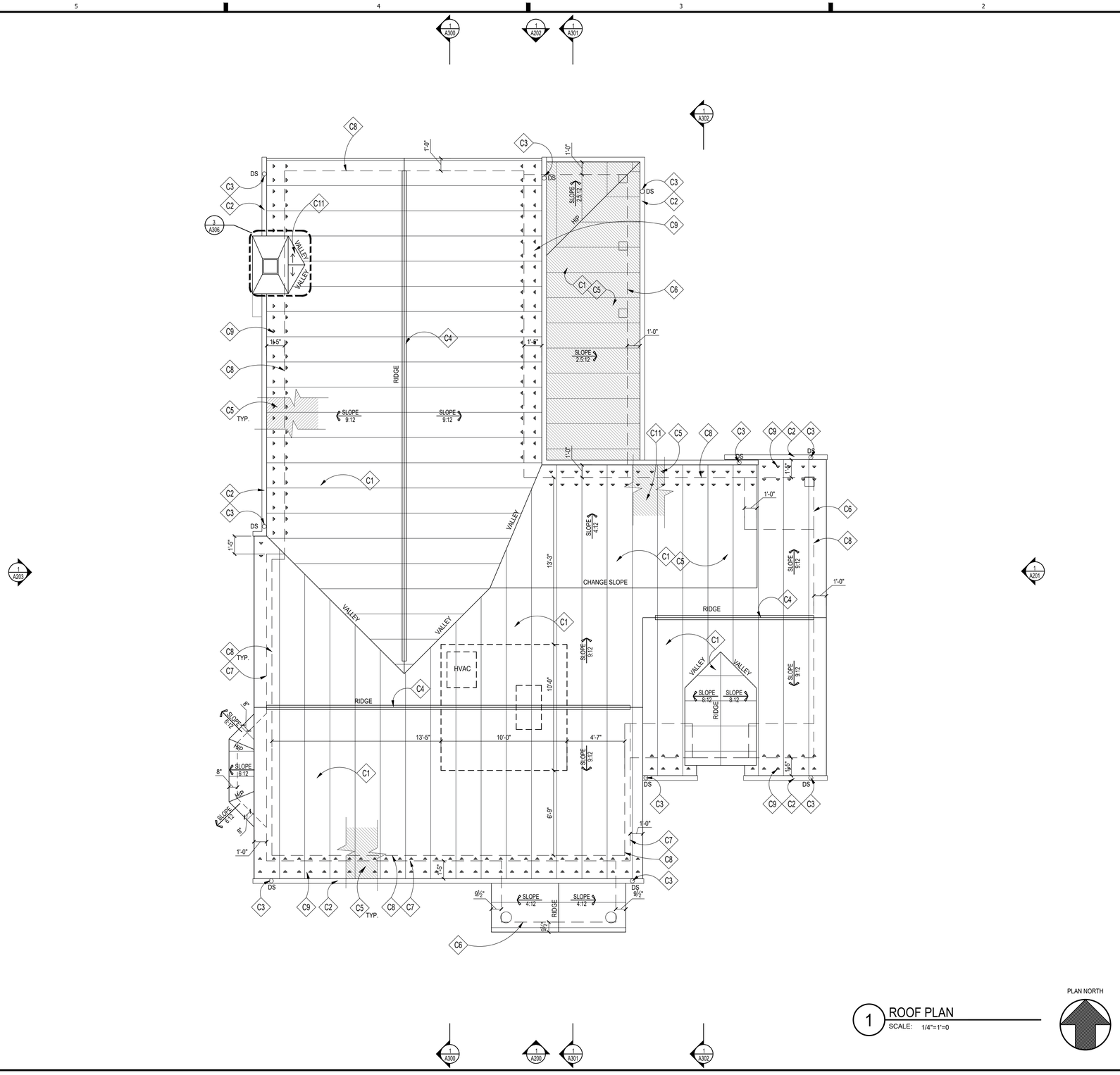

1 ROOF PLAN
SCALE: 1/4"=1'=0

PLAN NORTH

ROOFING NOTES

- C1 PTD. STANDING SEAM METAL ROOFING,TBS
- C2 OGEE GUTTER T.B.S., TYP.
- C3 4" ROUND DOWNSPOUT T.B.S., TYP.
- C4 STANDING SEAM METAL ROOF, T.B.S.
- C5 SEE NOTE #1 UNDER GENERAL ROOFING NOTES, TYP.
- C6 DASHED LINE INDICATES FACE OF BEAM BELOW
- C7 DASHED LINE INDICATES FACE OF BRICK BELOW
- C8 DASHED LINE INDICATES FACE OF FRAMING BELOW
- C9 PAD-STYLE MTL. SNOW GUARDS SPACED IN TWO ROWS, 2 PER PANEL INSTALL PER MANUF. SPECS
- C10 HALF ROUND METAL GUTTER
- C11 RADON MITIGATION PIPE, SEE SPECIFICATIONS SHEET FOR DETAILS

GENERAL ROOFING NOTES

1. PROVIDE SELF-ADHERING, 40 MIL ICE AND WATER GUARD UNDERLAYMENT UNDER SHINGLES AT ALL VALLEYS AND FROM LOWEST EDGE OF ROOF SURFACES TO A POINT AT LEAST 24" INSIDE THE EXTERIOR WALL LINE, AND ON ALL AREAS WITH A SLOPE LESS THAN 4:12.
2. SEE FRAMING PLAN FOR OVERBUILD AREAS
3. DOTTED LINE INDICATES LINE OF BUILDING BELOW

REVIEWED
By Michael Kyne at 2:02 pm, May 23, 2022

APPROVED
Montgomery County
Historic Preservation Commission

GTM ARCHITECTS

7735 OLD GEORGETOWN ROAD
SUITE 700
BETHESDA, MD 20814
(240)333-2000
(240)333-2001 FAX
WWW.GTMARCHITECTS.COM

Seal

I certify that these documents were prepared or approved by me, and that I am a duly licensed architect under the laws of the State of Maryland, license number 8385, Expiration Date: 12-06-2022.

Consultant

Project
23 HIGH STREET LOT 2
23 HIGH STREET, BROOKEVILLE, MD 20833

Owner

Developer

PERMIT SET	4-11-2022
Issue Description	Date

GTM Project No.	18.0320
Checked By	GTM
Drawn By	LEO/NW
Scale	AS NOTED

Sheet Title
ROOF PLAN

Sheet No.
A103

COPYRIGHT, 2022 GTM ARCHITECTS, INC.

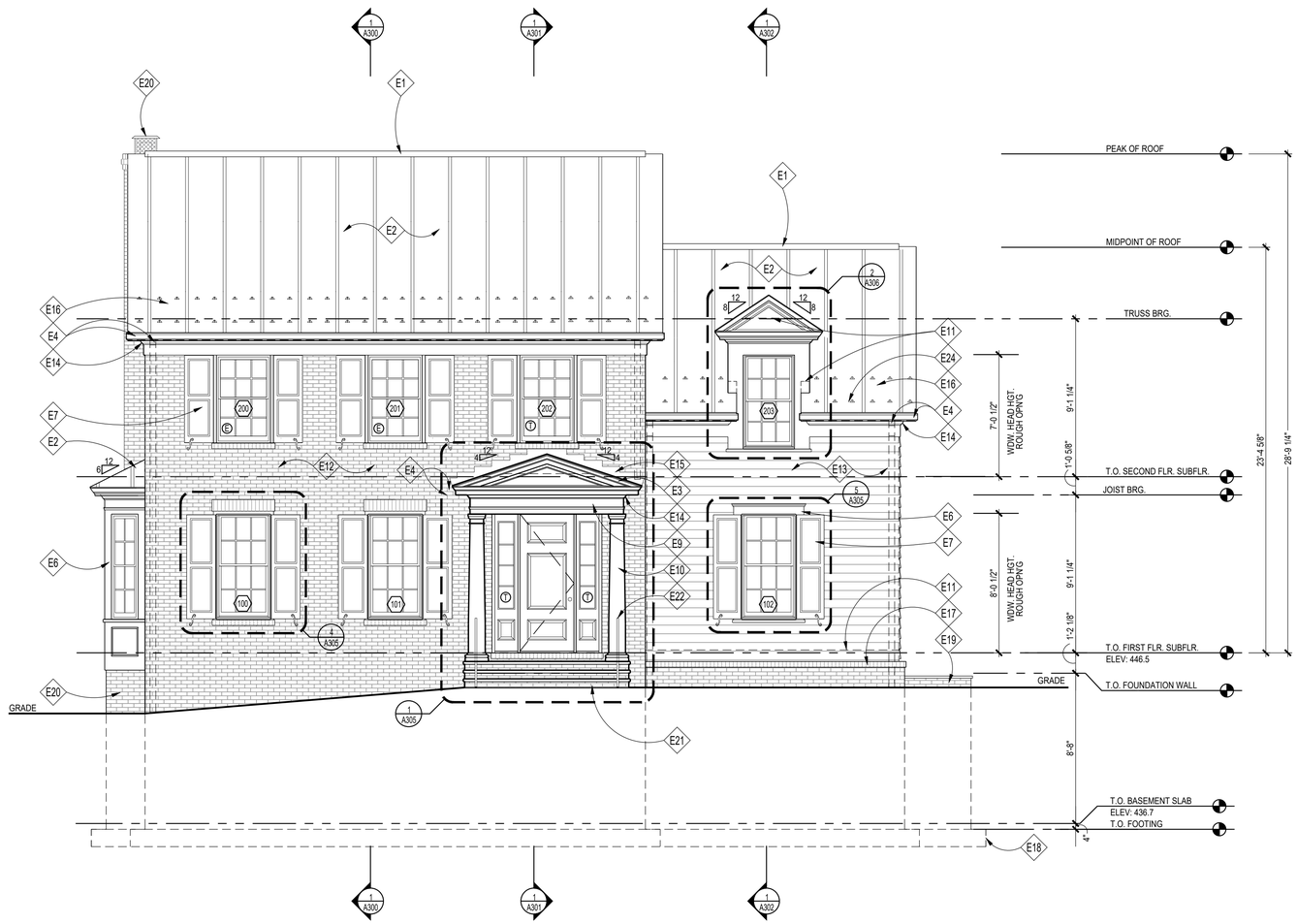

1 FRONT ELEVATION
SCALE: 1/4"=1'=0

ELEVATION NOTES

E1	RIDGE VENT W/ PTD. METAL CAP TO MATCH ROOFING, TYP.; REMOVE IF USING SPRAY FOAM INSULATION, SEE DETAIL '11/A304'
E2	PTD. STANDING SEAM METAL ROOF, T.B.S.
E3	PTD. 1X6 WOOD RAKE/FASCIA
E4	GUTTER (ON 1x6 PTD. WD FASCIA BD.) & 4" Ø DOWNSPOUT, T.B.S.
E5	NOT USED
E6	PTD. 1X6 WOOD WINDOW HEAD & JAMB TRIM W/ PAINTED HISTORIC TRIM
E7	PTD. OPERABLE WD. SHUTTERS W/ HISTORIC HARDWARE, T.B.S., SEE DETAILS '4&5/A305'
E8	PTD. 1X WD. TRIM; CUT TO FIT @ FRONT OF DORMERS
E9	PTD. 1X12 WOOD FRIEZE BD ALIGN W/ TOP OF WINDOWS/DOORS AND PORCH COLUMNS
E10	PTD 12" TAPERED ROUND WOOD COLUMN
E11	CONCEALED FLASHING & COUNTER FLASHING @ ALL VERTICAL TRANSITIONS, TYP. EXTEND MIN. 8" BEHIND SIDING. COLOR T.B.S.
E12	BRICK VENEER, TO BE SELECTED
E13	PTD. HARDIEPLANK LAP SIDING,W/ MITERED CORNERS 6" EXPOSURE
E14	PTD. WD. CROWN MLD. ON PTD. 1X BACKER
E15	PTD. ALUM BASE & COUNTER FLASHING @ VERTICAL TRANSITION; EXTEND MIN. 8" UP FACE OF CHIMNEY/WALL
E16	PAD-STYLE MTL. SNOW GUARDS SPACED IN TWO ROWS, 2 PER PANEL
E17	SLOPED BRICK ROWLOCK SILL
E18	DASHED LINE INDICATES FOOTING BELOW GRADE
E19	EGRESS WINDOW WELL W/ SLOPED FLAGSTONE CAP OVER CONC. FOUNDATION WALL
E20	BLACK GALVANIZED STEEL FLUE CHIMNEY CAP BY HOME SAVER (SINGLE FLUE) OR APPROVED EQUAL W/ FLAT SEAM METAL CAP, COLOR T.B.S.
E21	CONC. PORCH & STEPS TO GRADE W/ BRICK RISERS AND FLAGSTONE TREADS
E22	PTD. 34"H. MTL HANDRAIL PER IRC 2018

NOTE:

1. VERIFY ALL EXTERIOR RISER & TREAD DIMENSIONS IN FIELD
2. ALL EXTERIOR WOOD TRIM TO BE TREATED FOR PROTECTION AGAINST MOISTURE, ROT, FUNGAL ATTACK & INSECTS, WINDSOR-ONE+, LIFESPAN OR EQ.
3. Ⓣ = TEMPERED GLASS
   Ⓔ = EGRESS

REVIEWED
By Michael Kyne at 2:02 pm, May 23, 2022

APPROVED
Montgomery County
Historic Preservation Commission

GTM ARCHITECTS

7735 OLD GEORGETOWN ROAD
SUITE 700
BETHESDA, MD 20814
(240)333-2000
(240)333-2001 FAX
WWW.GTMARCHITECTS.COM

Seal

I certify that these documents were prepared or approved by me, and that I am a duly licensed architect under the laws of the State of Maryland, license number 8885, Expiration Date: 12-06-2022.

Consultant

Project
23 HIGH STREET
LOT 2
23 HIGH STREET, BROOKEVILLE, MD 20833

Owner

Developer

PERMIT SET	4-11-2022
Issue Description	Date

GTM Project No.	18.0320
Checked By	GTM
Drawn By	LEO/NW
Scale	AS NOTED

Sheet Title
FRONT ELEVATION

Sheet No.
A200

COPYRIGHT, 2022 GTM ARCHITECTS, INC.

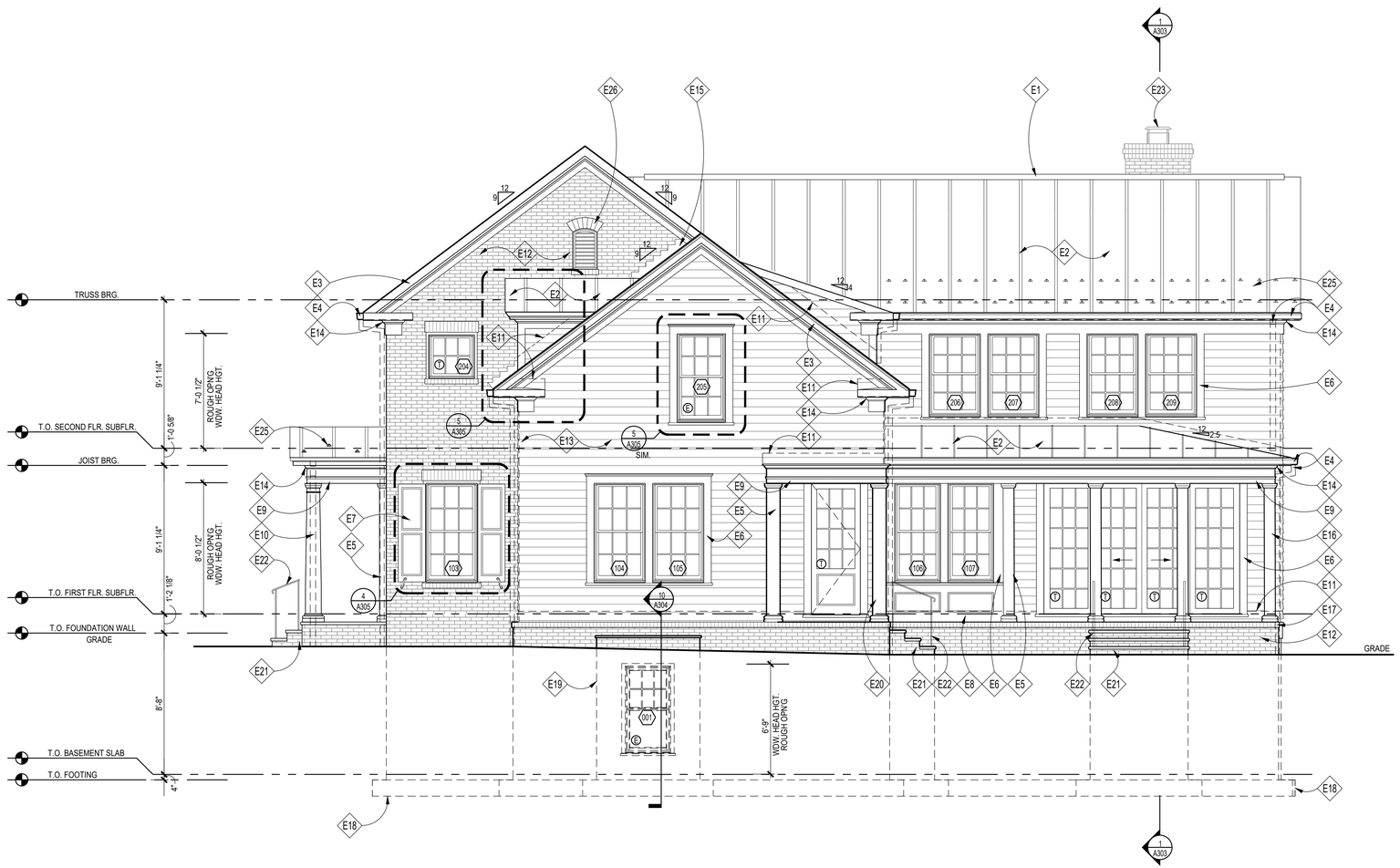

1 RIGHT SIDE ELEVATION
SCALE: 1/4"=1'=0

ELEVATION NOTES

E1	RIDGE VENT W/ PTD. METAL CAP TO MATCH ROOFING, TYP.; REMOVE IF USING SPRAY FOAM INSULATION, SEE DETAIL '11/A304'
E2	PTD. STANDING SEAM METAL ROOF, T.B.S.
E3	PTD. 1X6 WOOD RAKE/FASCIA
E4	GUTTER (ON 1x6 PTD. WD FASCIA BD.) & 4" Ø DOWNSPOUT, T.B.S.
E5	PTD. SQ. WD PILASTER TO MATCH ADJACENT COLUMN
E6	PTD. 1X6 WOOD WINDOW HEAD & JAMB TRIM W/ PAINTED HISTORIC TRIM
E7	PTD. OPERABLE WD. SHUTTERS W/ HISTORIC HARDWARE, T.B.S., SEE DETAILS '4&5/A305'
E8	PTD. 1X WD. TRIM; CUT TO FIT @ FRONT OF DORMERS
E9	PTD. 1X12 WOOD FRIEZE BD ALIGN W/ TOP OF WINDOWS/DOORS AND PORCH COLUMNS
E10	PTD 12" TAPERED ROUND WOOD COLUMN
E11	CONCEALED FLASHING & COUNTER FLASHING @ ALL VERTICAL TRANSITIONS, TYP. EXTEND MIN. 8" BEHIND SIDING. COLOR T.B.S.
E12	BRICK VENEER, TO BE SELECTED
E13	PTD. HARDIEPLANK LAP SIDING,W/ MITERED CORNERS 6" EXPOSURE
E14	PTD. WD. CROWN MLD. ON PTD. 1X BACKER
E15	PTD. ALUM BASE & COUNTER FLASHING @ VERTICAL TRANSITION; EXTEND MIN. 8" UP FACE OF CHIMNEY/WALL
E16	PTD. 8" SQ. WD COLUMN W/ NECK MOULD, TUSCAN CAP & BASE
E17	SLOPED BRICK ROWLOCK SILL
E18	DASHED LINE INDICATES FOOTING BELOW GRADE
E19	EGRESS WINDOW WELL W/ SLOPED FLAGSTONE CAP OVER CONC. FOUNDATION WALL
E20	PTD. 10" SQ. WD COLUMN W/ NECK MOULD, TUSCAN CAP & BASE
E21	CONC. PORCH & STEPS TO GRADE W/ BRICK RISERS AND FLAGSTONE TREADS
E22	PTD. 34"H. MTL HANDRAIL PER IRC 2018
E23	BLACK GALVANIZED STEEL FLUE CHIMNEY CAP BY HOME SAVER (SINGLE FLUE) OR APPROVED EQUAL W/ FLAT SEAM METAL CAP, COLOR T.B.S.
E24	FYPON EBLV 18X30 ATTIC VENT W/ INSECT SCREEN BEHIND
E25	PAD-STYLE MTL. SNOW GUARDS SPACED IN TWO ROWS, 2 PER PANEL

NOTE:

1. VERIFY ALL EXTERIOR RISER & TREAD DIMENSIONS IN FIELD
2. ALL EXTERIOR WOOD TRIM TO BE TREATED FOR PROTECTION AGAINST MOISTURE, ROT, FUNGAL ATTACK & INSECTS, WINDSOR-ONE+, LIFESPAN OR EQ.
3. Ⓣ = TEMPERED GLASS
   Ⓔ = EGRESS

REVIEWED
By Michael Kyne at 2:02 pm, May 23, 2022

APPROVED
Montgomery County
Historic Preservation Commission

GTM ARCHITECTS

7735 OLD GEORGETOWN ROAD
SUITE 700
BETHESDA, MD 20814
(240)333-2000
(240)333-2001 FAX
WWW.GTMARCHITECTS.COM

Seal

I certify that these documents were prepared or approved by me, and that I am a duly licensed architect under the laws of the State of Maryland, license number 8385, Expiration Date: 12-06-2022.

Consultant

Project
23 HIGH STREET
LOT 2
23 HIGH STREET, BROOKEVILLE, MD 20833

Owner

Developer

PERMIT SET	4-11-2022
Issue Description	Date

GTM Project No.	18.0320
Checked By	GTM
Drawn By	LEO/NW
Scale	AS NOTED

Sheet Title
RIGHT SIDE ELEVATION

Sheet No.
A201

COPYRIGHT, 2022 GTM ARCHITECTS, INC.

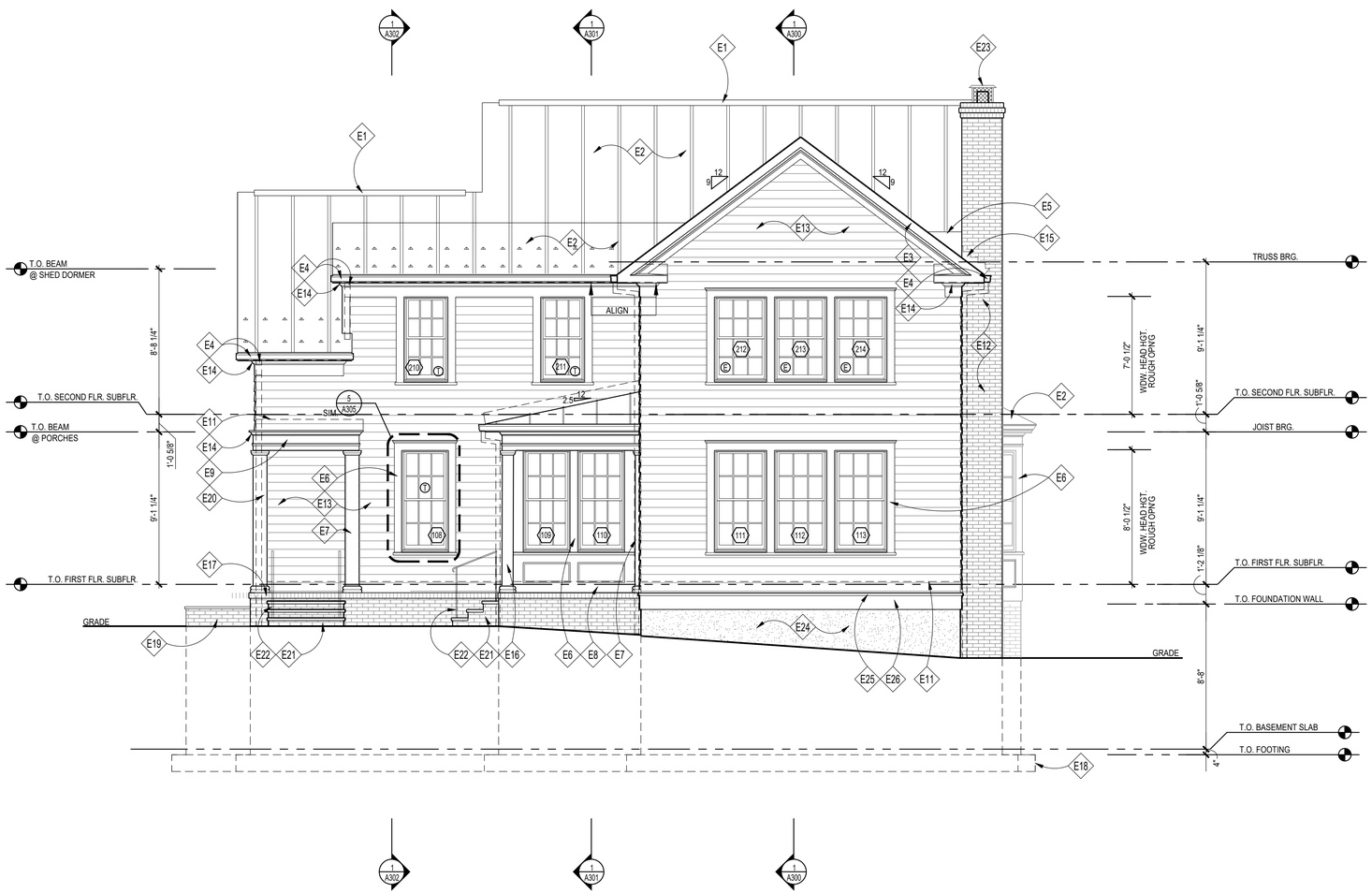

1 REAR ELEVATION
SCALE: 1/4"=1'=0

ELEVATION NOTES

E1	RIDGE VENT W/ PTD. METAL CAP TO MATCH ROOFING, TYP.; REMOVE IF USING SPRAY FOAM INSULATION, SEE DETAIL '11/A304'
E2	PTD. STANDING SEAM METAL ROOF, T.B.S.
E3	PTD. 1X6 WOOD RAKE/FASCIA
E4	GUTTER (ON 1x6 PTD. WD FASCIA BD.) & 4" Ø DOWNSPOUT, T.B.S.
E5	MTL CRICKET PER IRC, MIN 4:12 SLOPE
E6	PTD. 1X6 WOOD WINDOW HEAD & JAMB TRIM W/ PAINTED HISTORIC TRIM
E7	PTD. SQ. WD PILASTER TO MATCH ADJACENT COLUMN
E8	PTD. 1X WD. TRIM; CUT TO FIT
E9	PTD. 1X12 WOOD FRIEZE BD ALIGN W/ TOP OF WINDOWS/DOORS AND PORCH COLUMNS
E10	NOT USED
E11	CONCEALED FLASHING & COUNTER FLASHING @ ALL VERTICAL TRANSITIONS, TYP. EXTEND MIN. 8" BEHIND SIDING. COLOR T.B.S.
E12	BRICK VENEER, TO BE SELECTED
E13	PTD. HARDIEPLANK LAP SIDING,W/ MITERED CORNERS 6" EXPOSURE
E14	PTD. WD. CROWN MLD. ON PTD. 1X BACKER
E15	PTD. ALUM BASE & COUNTER FLASHING @ VERTICAL TRANSITION; EXTEND MIN. 8" UP FACE OF CHIMNEY/WALL
E16	PTD. 8" SQ. WD COLUMN W/ NECK MOULD, TUSCAN CAP & BASE
E17	SLOPED BRICK ROWLOCK SILL
E18	DASHED LINE INDICATES FOOTING BELOW GRADE
E19	EGRESS WINDOW WELL W/ SLOPED FLAGSTONE CAP OVER CONC. FOUNDATION WALL
E20	PTD. 10" SQ. WD COLUMN W/ NECK MOULD, TUSCAN CAP & BASE
E21	CONC. PORCH & STEPS TO GRADE W/ BRICK RISERS AND FLAGSTONE TREADS
E22	PTD. 34"H. MTL HANDRAIL PER IRC 2018
E23	BLACK GALVANIZED STEEL FLUE CHIMNEY CAP BY HOME SAVER (SINGLE FLUE) OR APPROVED EQUAL W/ FLAT SEAM METAL CAP, COLOR T.B.S.
E24	PARGED & PTD. CONC. FOUNDATION WALL WHERE EXPOSED
E25	PTD. SLOPED 1X WOOD DRIP CAP, SEE 13/A303 FOR DETAIL
E26	PTD. 5/4 x 10 WOOD TRIMBAND

NOTE:

1. VERIFY ALL EXTERIOR RISER & TREAD DIMENSIONS IN FIELD
2. ALL EXTERIOR WOOD TRIM TO BE TREATED FOR PROTECTION AGAINST MOISTURE, ROT, FUNGAL ATTACK & INSECTS, WINDSOR-ONE+, LIFESPAN OR EQ.
3. Ⓣ = TEMPERED GLASS
   Ⓔ = EGRESS

REVIEWED
By Michael Kyne at 2:02 pm, May 23, 2022

APPROVED
Montgomery County
Historic Preservation Commission

GTM ARCHITECTS

7735 OLD GEORGETOWN ROAD
SUITE 700
BETHESDA, MD 20814
(240)333-2000
(240)333-2001 FAX
WWW.GTMARCHITECTS.COM

Seal

I certify that these documents were prepared or approved by me, and that I am a duly licensed architect under the laws of the State of Maryland, license number 8385, Expiration Date: 12-06-2022.

Consultant

Project
23 HIGH STREET LOT 2
23 HIGH STREET, BROOKEVILLE, MD 20833

Owner

Developer

PERMIT SET	4-11-2022
Issue Description	Date

GTM Project No.	18.0320
Checked By	GTM
Drawn By	LEO/NW
Scale	AS NOTED

Sheet Title
REAR ELEVATION

Sheet No.
A202

COPYRIGHT, 2022 GTM ARCHITECTS, INC.

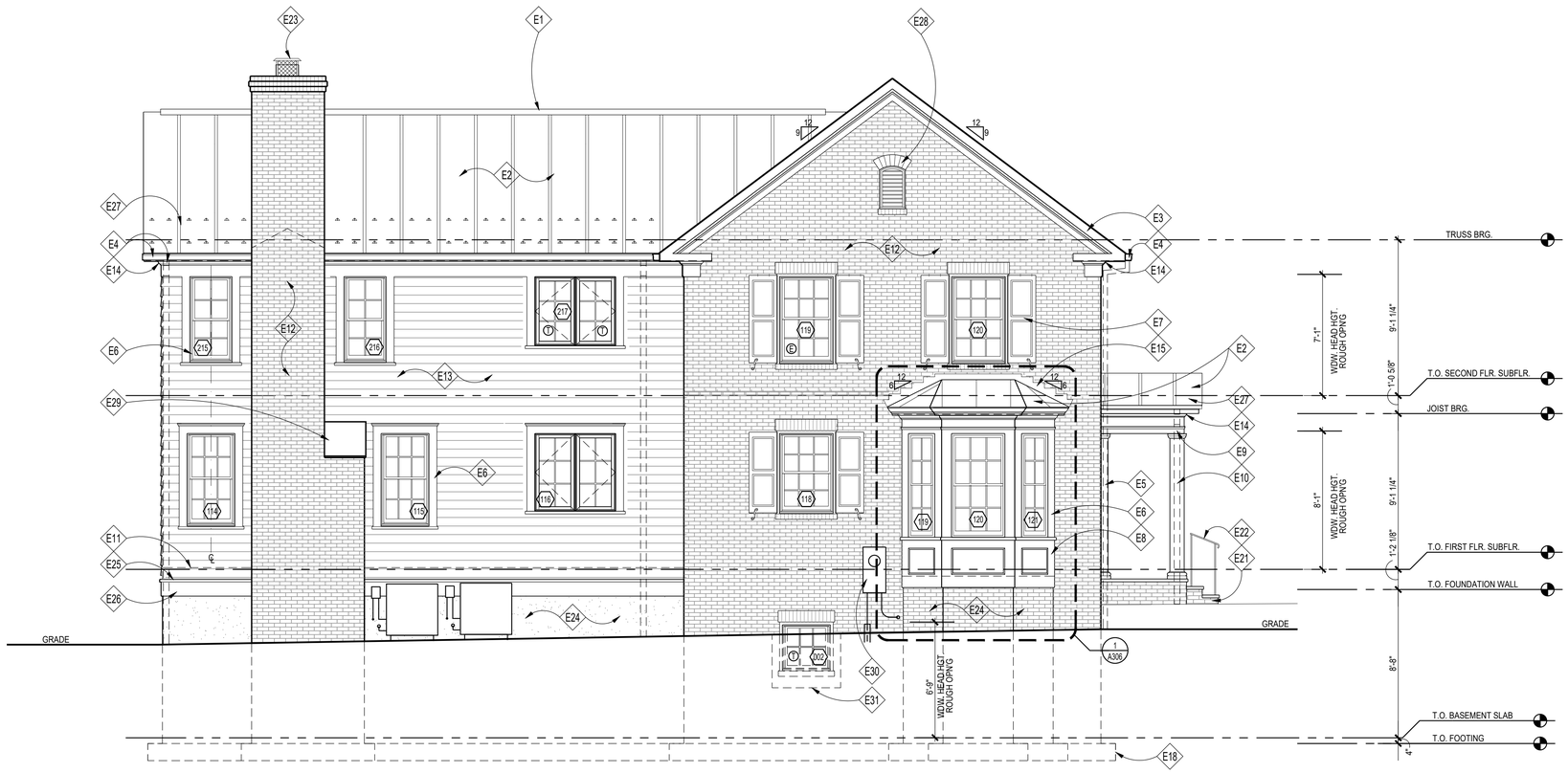

1 LEFT SIDE ELEVATION
SCALE: 1/4"=1'=0

ELEVATION NOTES

E1	RIDGE VENT W/ PTD. METAL CAP TO MATCH ROOFING, TYP.; REMOVE IF USING SPRAY FOAM INSULATION, SEE DETAIL '11/A304'
E2	PTD. STANDING SEAM METAL ROOF, T.B.S.
E3	PTD. 1X6 WOOD RAKE/FASCIA
E4	GUTTER (ON 1x6 PTD. WD FASCIA BD.) & 4" Ø DOWNSPOUT, T.B.S.
E5	PTD. SQ. WD PILASTER TO MATCH ADJACENT COLUMN
E6	PTD. 1X6 WOOD WINDOW HEAD & JAMB TRIM W/ PAINTED HISTORIC TRIM
E7	PTD. OPERABLE WD. SHUTTERS W/ HISTORIC HARDWARE, T.B.S., SEE DETAILS '4&5/A305'
E8	PTD. 1X WD. TRIM; CUT TO FIT
E9	PTD. 1X12 WOOD FRIEZE BD ALIGN W/ TOP OF WINDOWS/DOORS AND PORCH COLUMNS
E10	PTD 12" TAPERED ROUND WOOD COLUMN
E11	CONCEALED FLASHING & COUNTER FLASHING @ ALL VERTICAL TRANSITIONS, TYP. EXTEND MIN. 8" BEHIND SIDING. COLOR T.B.S.
E12	BRICK VENEER, TO BE SELECTED
E13	PTD. HARDIEPLANK LAP SIDING,W/ MITERED CORNERS 6" EXPOSURE
E14	PTD. WD. CROWN MLD. ON PTD. 1X BACKER
E15	PTD. ALUM BASE & COUNTER FLASHING @ VERTICAL TRANSITION; EXTEND MIN. 8" UP FACE OF CHIMNEY/WALL
E16	PTD. 8" SQ. WD COLUMN W/ NECK MOULD, TUSCAN CAP & BASE
E17	SLOPED BRICK ROWLOCK SILL
E18	DASHED LINE INDICATES FOOTING BELOW GRADE
E19	EGRESS WINDOW WELL W/ FLAGSTONE CAP OVER CONC. FOUNDATION WALL
E20	PTD. 10" SQ. WD COLUMN W/ NECK MOULD, TUSCAN CAP & BASE
E21	CONC. PORCH & STEPS TO GRADE W/ BRICK RISERS AND FLAGSTONE TREADS
E22	PTD. 34"H. MTL HANDRAIL PER IRC 2018
E23	BLACK GALVANIZED STEEL FLUE CHIMNEY CAP BY HOME SAVER (SINGLE FLUE) OR APPROVED EQUAL W/ FLAT SEAM METAL CAP, COLOR T.B.S.
E24	PARGED & PTD. CONC. FOUNDATION WALL WHERE EXPOSED
E25	PTD. SLOPED 1X WOOD DRIP CAP, SEE 13/A303 FOR DETAIL
E26	PTD. 5/4 x 10 WOOD TRIMBAND
E27	PAD-STYLE MTL. SNOW GUARDS SPACED IN TWO ROWS, 2 PER PANEL
E28	FYPON EBLV 18X30 ATTIC VENT W/ INSECT SCREEN BEHIND
E29	SLOPED STONE SHOULDER CAP
E30	ELEC METER, FIELD VERIFY FINAL LOCATION
E31	PREFABRICATED WINDOW WELL, PROVIDE GRAVEL BASE AND DRAIN TO SUMP OR DAYLIGHT

NOTE:

1. VERIFY ALL EXTERIOR RISER & TREAD DIMENSIONS IN FIELD
2. ALL EXTERIOR WOOD TRIM TO BE TREATED FOR PROTECTION AGAINST MOISTURE, ROT, FUNGAL ATTACK & INSECTS, WINDSOR-ONE+, LIFESPAN OR EQ.
3. Ⓣ = TEMPERED GLASS
   Ⓔ = EGRESS

REVIEWED
By Michael Kyne at 2:02 pm, May 23, 2022

APPROVED
Montgomery County
Historic Preservation Commission

GTM ARCHITECTS

7735 OLD GEORGETOWN ROAD
SUITE 700
BETHESDA, MD 20814
(240)333-2000
(240)333-2001 FAX
WWW.GTMARCHITECTS.COM

Seal

I certify that these documents were prepared or approved by me, and that I am a duly licensed architect under the laws of the State of Maryland, license number 8385, Expiration Date: 12-06-2022.

Consultant

Project
23 HIGH STREET
LOT 2
23 HIGH STREET, BROOKEVILLE, MD 20833

Owner

Developer

PERMIT SET	4-11-2022
Issue Description	Date

GTM Project No.	18.0320
Checked By	GTM
Drawn By	LEO/NW
Scale	AS NOTED

Sheet Title
LEFT SIDE ELEVATION

Sheet No.
A203

COPYRIGHT, 2022 GTM ARCHITECTS, INC.

FILE NAME:

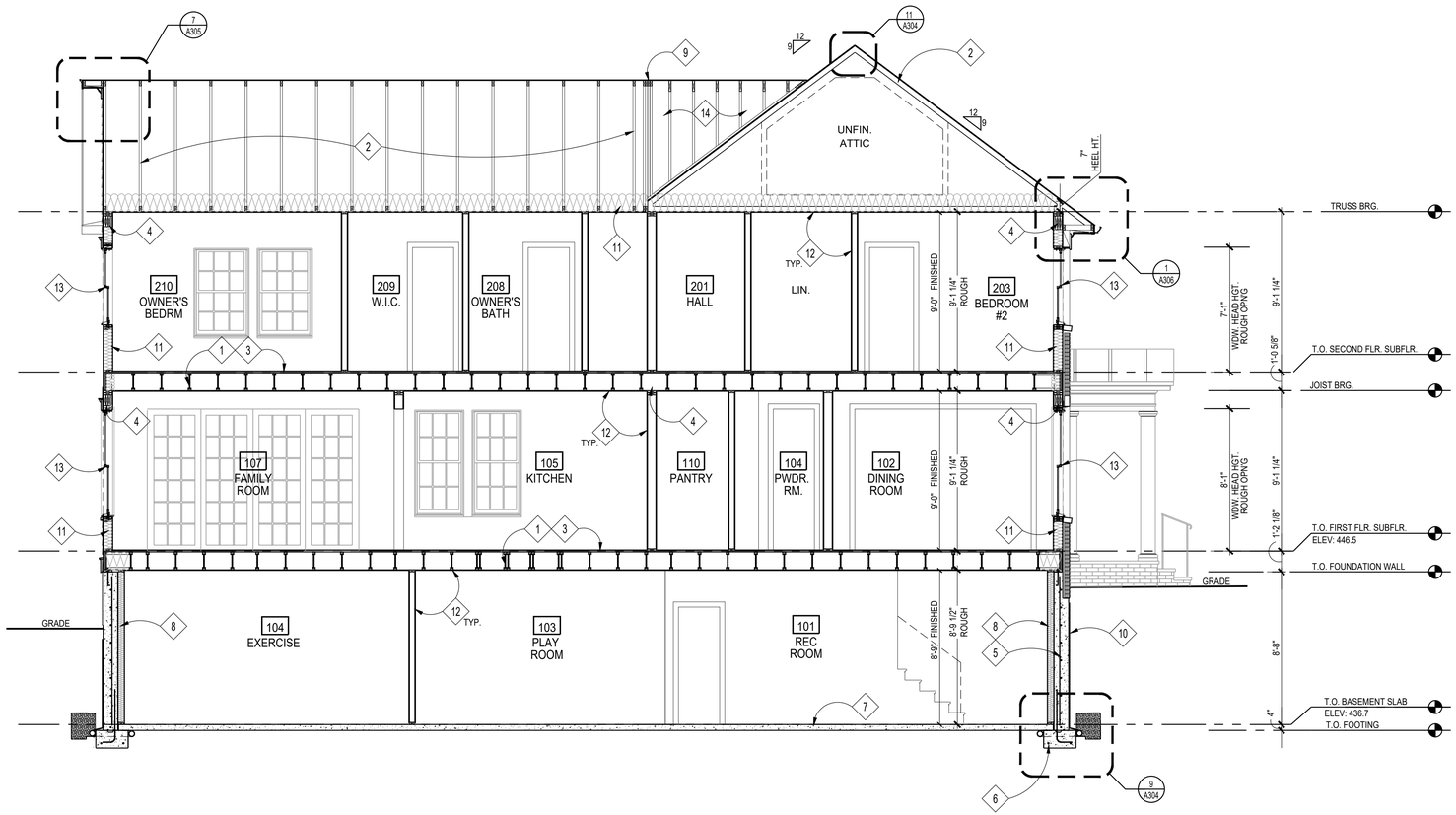

1 BUILDING SECTION @ STAIRS
SCALE: 1/4"=1'=0

CONSTRUCTION NOTES

1. FLOOR JOISTS; SEE FRAMING PLANS
2. ROOF TRUSSES BY TRUSS MANUFACTURER; SEE FRAMING PLANS
3. 3/4" T&G PLYWD. SUBFLOOR; GLUED & SCREWED
4. BEAM/ LINTEL/ HEADER; SEE FRAMING PLANS
5. CONCRETE FOUNDATION WALL; SEE FOUNDATION PLAN
6. FOOTING; SEE FOUNDATION PLAN
7. REINF. CONC. SLAB; SEE FOUNDATION PLAN
8. FUR OUT BASEMENT WALLS W/ 2x4's @ 16" O.C. & R-13 BATT INSULATION, TYP.
9. GIRDER TRUSS BY TRUSS MANUFACTURER; SEE FRAMING PLANS
10. WATERPROOFING AND DRAINAGE BD TO GRADE
11. INSULATION, SEE THERMAL ENVELOPE SHEET EC001
12. 1/2" GYP. BD
13. SCHEDULED WINDOW/DOOR
14. OVERBUILD, SEE FRAMING PLANS

REVIEWED
By Michael Kyne at 2:02 pm, May 23, 2022

APPROVED
Montgomery County
Historic Preservation Commission

GTM ARCHITECTS

7735 OLD GEORGETOWN ROAD
SUITE 700
BETHESDA, MD 20814
(240)333-2000
(240)333-2001 FAX
WWW.GTMARCHITECTS.COM

Seal

I certify that these documents were prepared or approved by me, and that I am a duly licensed architect under the laws of the State of Maryland, license number 8385, Expiration Date: 12-06-2022.

Consultant

Project
23 HIGH STREET LOT 2
23 HIGH STREET, BROOKEVILLE, MD 20833

Owner

Developer

PERMIT SET	4-11-2022
Issue Description	Date

GTM Project No.	18.0320
Checked By	GTM
Drawn By	LEO/NW
Scale	AS NOTED

Sheet Title
BUILDING SECTION

Sheet No.
A300

COPYRIGHT, 2022 GTM ARCHITECTS, INC.

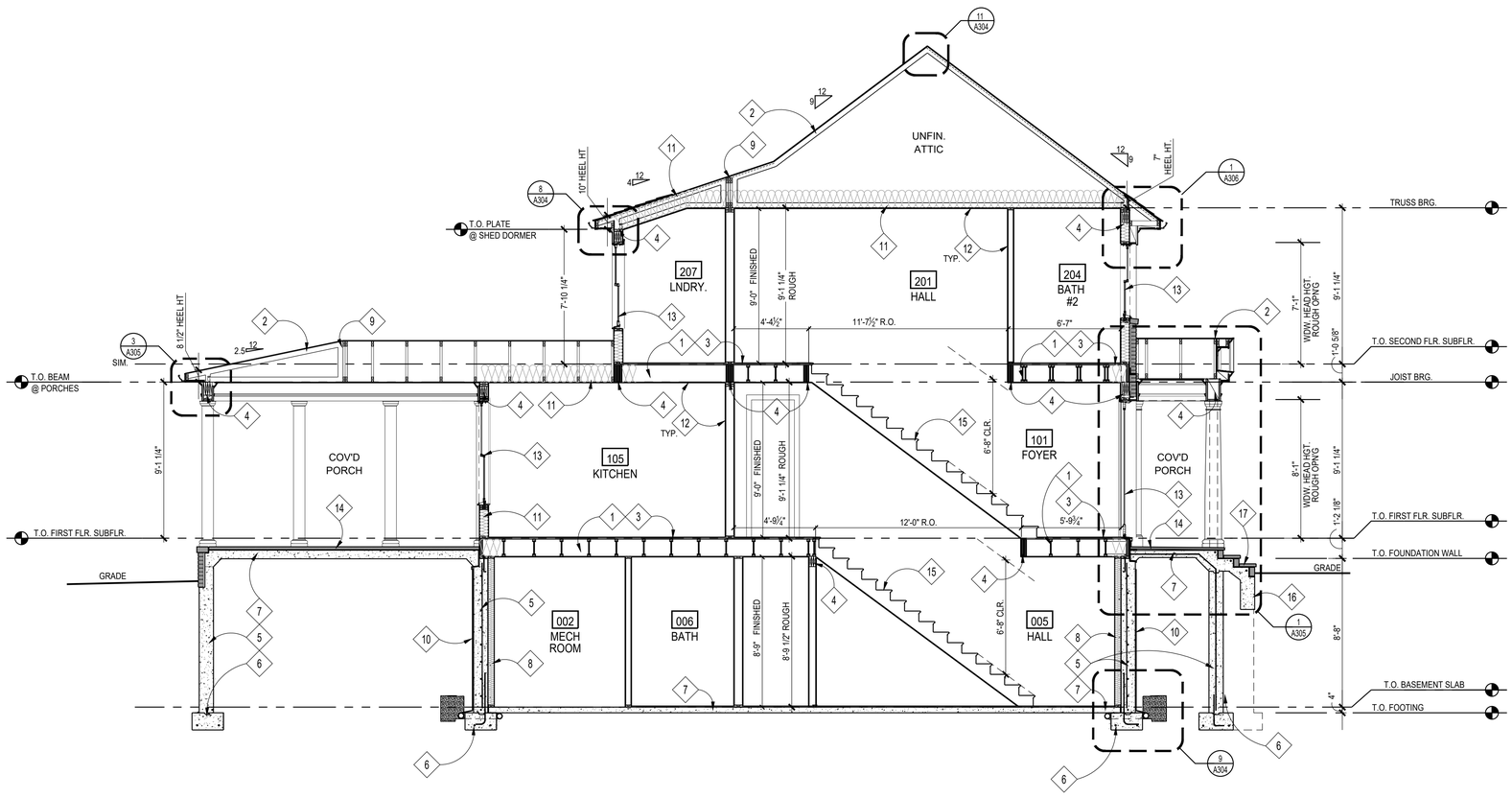

1 BUILDING SECTION
SCALE: 1/4"=1'=0

CONSTRUCTION NOTES

1. FLOOR JOISTS; SEE FRAMING PLANS
2. ROOF TRUSSES BY TRUSS MANUFACTURER; SEE FRAMING PLANS
3. 3/4" T&G PLYWD. SUBFLOOR; GLUED & SCREWED
4. BEAM/ LINTEL/ HEADER; SEE FRAMING PLANS
5. CONCRETE FOUNDATION WALL; SEE FOUNDATION PLAN
6. FOOTING; SEE FOUNDATION PLAN
7. REINF. CONC. SLAB; SEE FOUNDATION PLAN
8. FUR OUT BASEMENT WALLS W/ 2x4's @ 16" O.C. & R-13 BATT INSULATION, TYP.
9. GIRDER TRUSS BY TRUSS MANUFACTURER; SEE FRAMING PLANS
10. WATERPROOFING AND DRAINAGE BD TO GRADE
11. INSULATION, SEE THERMAL ENVELOPE SHEET EC001
12. 1/2" GYP. BD
13. SCHEDULED WINDOW/DOOR
14. FLAGSTONE; T.B.S, ON 1" SETTING BED ON STRUCTURAL CONC. SLAB, SEE STRUCTURAL DRAWINGS.
15. STAIRCASE & RAILING; TREADS & RISERS, MATCH H.W.F., T.B.S., SEE DETAILS 1, 6 & 18 /A304, FOLLOW IRC 2018, RAILING T.B.S.
16. GRADE BEAM SUPPORTED BY CONC. WING WALL, SEE FOUNDATION PLAN
17. STEPS W/ BRICK VENEER RISERS & FLAGSTONE TREADS TO GRADE, FIELD VERIFY RISE/RUN

REVIEWED
By Michael Kyne at 2:02 pm, May 23, 2022

APPROVED
Montgomery County
Historic Preservation Commission

GTM ARCHITECTS

7735 OLD GEORGETOWN ROAD
SUITE 700
BETHESDA, MD 20814
(240)333-2000
(240)333-2001 FAX
WWW.GTMARCHITECTS.COM

Seal

I certify that these documents were prepared or approved by me, and that I am a duly licensed architect under the laws of the State of Maryland, license number 8385, Expiration Date: 12-06-2022.

Consultant

Project
23 HIGH STREET LOT 2
23 HIGH STREET, BROOKEVILLE, MD 20833

Owner

Developer

Issue Description	Date
PERMIT SET	4-11-2022

GTM Project No.	18.0320
Checked By	GTM
Drawn By	LEO/NW
Scale	AS NOTED

Sheet Title
BUILDING SECTION

Sheet No.
A301

COPYRIGHT, 2022 GTM ARCHITECTS, INC.

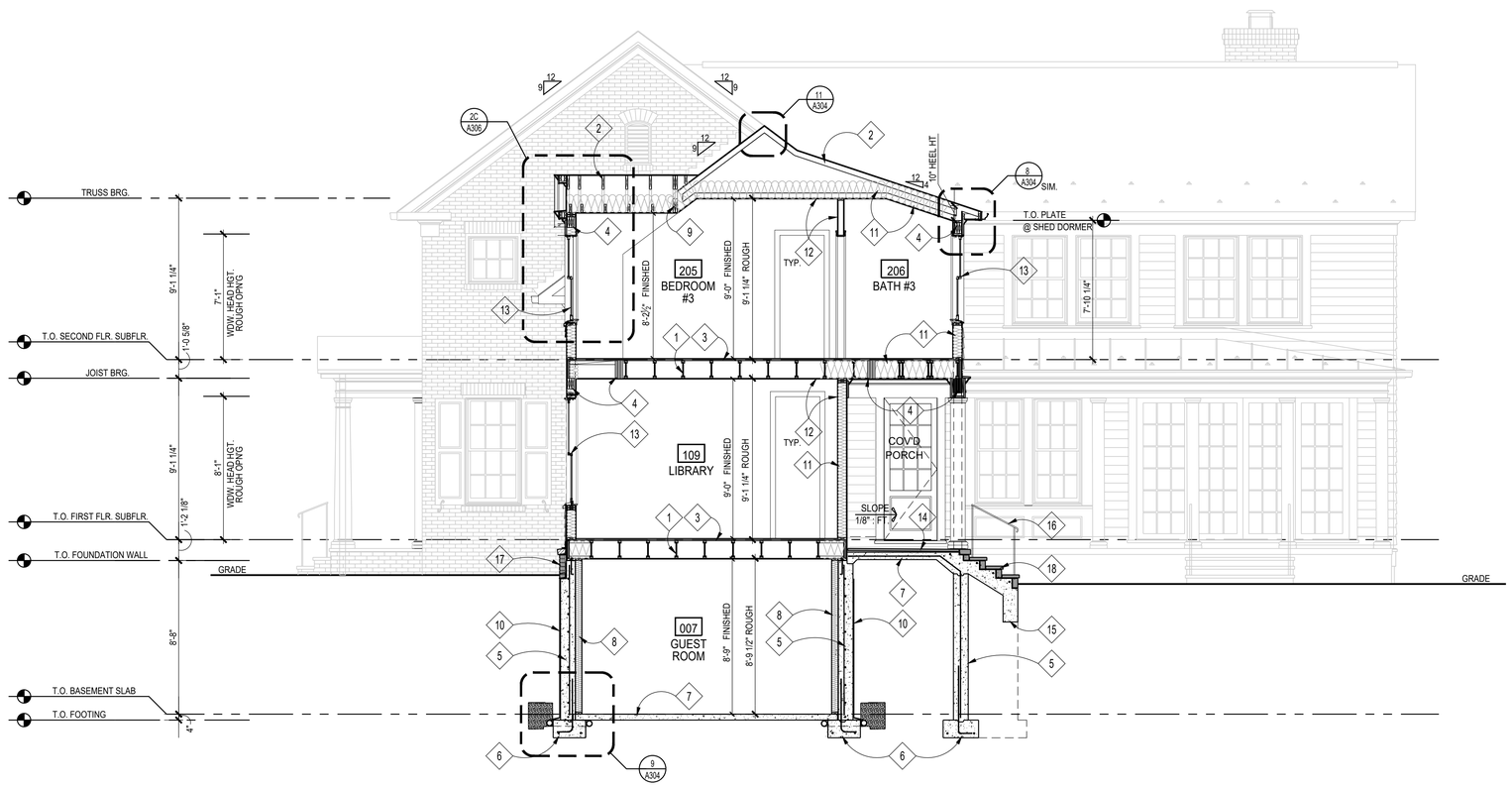

1 BUILDING SECTION
SCALE: 1/4"=1'=0

CONSTRUCTION NOTES

1. FLOOR JOISTS; SEE FRAMING PLANS
2. ROOF TRUSSES BY TRUSS MANUFACTURER; SEE FRAMING PLANS
3. 3/4" T&G PLYWD. SUBFLOOR; GLUED & SCREWED
4. BEAM/ LINTEL/ HEADER; SEE FRAMING PLANS
5. CONCRETE FOUNDATION WALL; SEE FOUNDATION PLAN
6. FOOTING; SEE FOUNDATION PLAN
7. REINF. CONC. SLAB; SEE FOUNDATION PLAN
8. FUR OUT BASEMENT WALLS W/ 2x4's @ 16" O.C. & R-13 BATT INSULATION, TYP.
9. GIRDER TRUSS BY TRUSS MANUFACTURER; SEE FRAMING PLANS
10. WATERPROOFING AND DRAINAGE BD TO GRADE
11. INSULATION, SEE THERMAL ENVELOPE SHEET EC001
12. 1/2" GYP. BD
13. SCHEDULED WINDOW/DOOR
14. FLAGSTONE; T.B.S, ON 1" SETTING BED ON STRUCTURAL CONC. SLAB, SEE STRUCTURAL DRAWINGS.
15. GRADE BEAM SUPPORTED BY CONC. WING WALL, SEE FOUNDATION PLAN
16. HANDRAIL @ 34" ABOVE NOSING, HANDRAIL HT & GRIPSIZE PER IRC 2018.
17. BRICK VENEER W/ SLOPED STONE WATERTABLE CAP, SEE ELEVATIONS
18. STEPS W/ BRICK VENEER RISERS & FLAGSTONE TREADS TO GRADE, FIELD VERIFY RISE/RUN

REVIEWED
By Michael Kyne at 2:02 pm, May 23, 2022

APPROVED
Montgomery County
Historic Preservation Commission

GTM ARCHITECTS

7735 OLD GEORGETOWN ROAD
SUITE 700
BETHESDA, MD 20814
(240)333-2000
(240)333-2001 FAX
WWW.GTMARCHITECTS.COM

Seal

I certify that these documents were prepared or approved by me, and that I am a duly licensed architect under the laws of the State of Maryland, license number 8385, Expiration Date: 12-06-2022.

Consultant

Project
23 HIGH STREET LOT 2
23 HIGH STREET, BROOKEVILLE, MD 20833

Owner

Developer

PERMIT SET	4-11-2022
Issue Description	Date

GTM Project No.	18.0320
Checked By	GTM
Drawn By	LEO/NW
Scale	AS NOTED

Sheet Title
BUILDING SECTION

Sheet No.
A302

COPYRIGHT, 2022 GTM ARCHITECTS, INC.

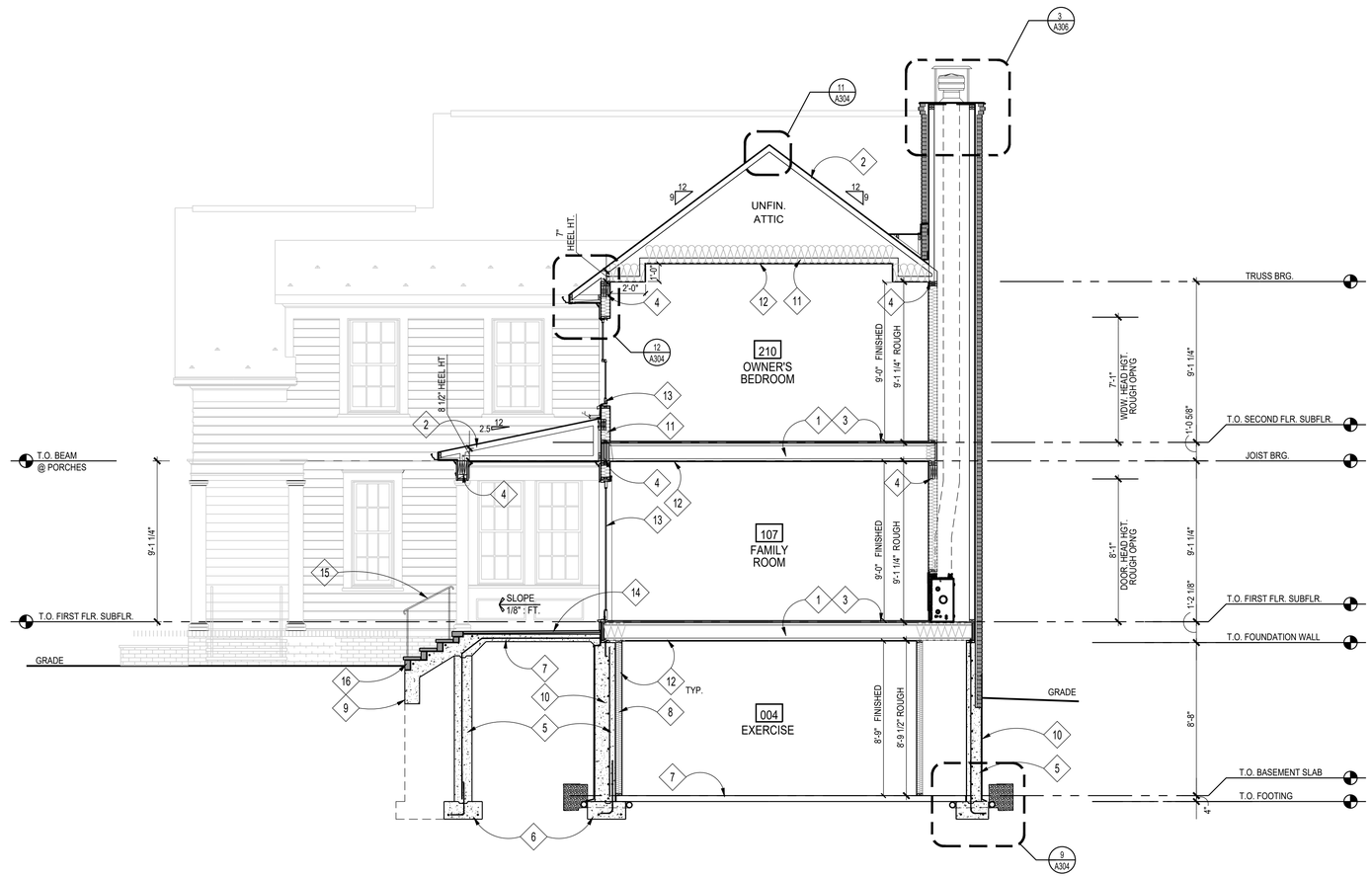

1 BUILDING SECTION
SCALE: 1/4"=1'=0

CONSTRUCTION NOTES

1. FLOOR JOISTS; SEE FRAMING PLANS
2. ROOF TRUSSES BY TRUSS MANUFACTURER; SEE FRAMING PLANS
3. 3/4" T&G PLYWD. SUBFLOOR; GLUED & SCREWED
4. BEAM/ LINTEL/ HEADER; SEE FRAMING PLANS
5. CONCRETE FOUNDATION WALL; SEE FOUNDATION PLAN
6. FOOTING; SEE FOUNDATION PLAN
7. REINF. CONC. SLAB; SEE FOUNDATION PLAN
8. FUR OUT BASEMENT WALLS W/ 2x4's @ 16" O.C. & R-13 BATT INSULATION, TYP.
9. GRADE BEAM SUPPORTED BY CONC. WING WALL, SEE FOUNDATION PLAN
10. WATERPROOFING AND DRAINAGE BD TO GRADE
11. INSULATION, SEE THERMAL ENVELOPE SHEET EC001
12. 1/2" GYP. BD
13. SCHEDULED WINDOW/DOOR
14. FLAGSTONE; T.B.S, ON 1" SETTING BED ON STRUCTURAL CONC. SLAB, SEE STRUCTURAL DRAWINGS.
15. HANDRAIL @ 34" ABOVE NOSING, HANDRAIL HT & GRIPSIZE PER IRC 2018.
16. STEPS W/ BRICK VENEER RISERS & FLAGSTONE TREADS TO GRADE, FIELD VERIFY RISE/RUN

REVIEWED
By Michael Kyne at 2:02 pm, May 23, 2022

APPROVED
Montgomery County
Historic Preservation Commission

GTM ARCHITECTS

7735 OLD GEORGETOWN ROAD
SUITE 700
BETHESDA, MD 20814
(240)333-2000
(240)333-2001 FAX
WWW.GTMARCHITECTS.COM

Seal

I certify that these documents were prepared or approved by me, and that I am a duly licensed architect under the laws of the State of Maryland License number 8086, Expiration Date: 06-06-2022.

Consultant

Project

23 HIGH STREET LOT 2

23 HIGH STREET, BROOKEVILLE, MD 20833

Owner

Developer

PERMIT SET	4-11-2022

Issue Description	*Date*

GTM Project No.	18.0320
Checked By	GTM
Drawn By	LEO/NW
Scale	AS NOTED

Sheet Title

BUILDING SECTION

Sheet No.

A303

COPYRIGHT, 2022 GTM ARCHITECTS, INC.

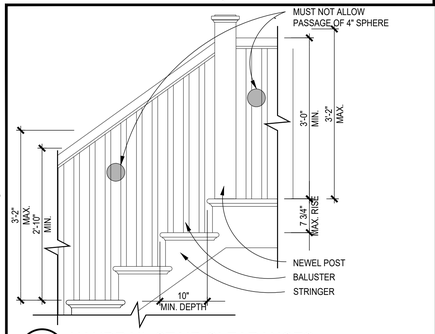

18 HANDRAIL STAIR CLEARANCES
SCALE: 3/4"=1'-0"
R08-045

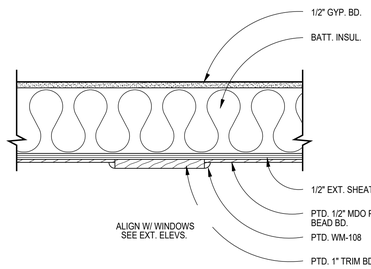

17 EXTERIOR PANEL DETAIL
SCALE: 1"=1'-0"
(1X1)

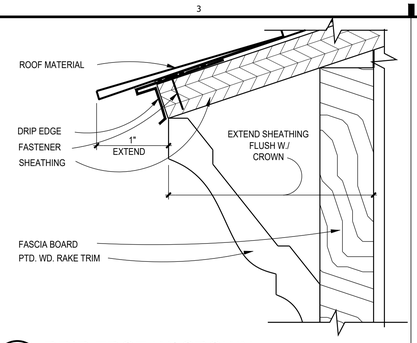

16 DRIP EDGE W/ CROWN
SCALE: 1" = 1"
(1X1)

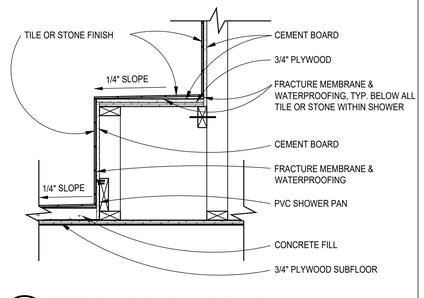

15 SECTION @ SHOWER BENCH
SCALE: 1"=1'-0"
R06-046

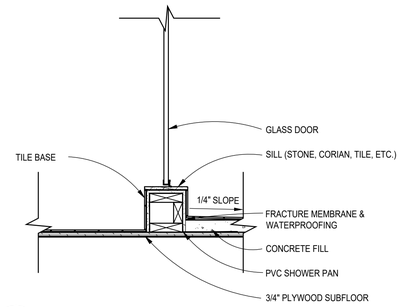

14 SECTION @ SHOWER CURB
SCALE: 1"=1'-0"
R06-047

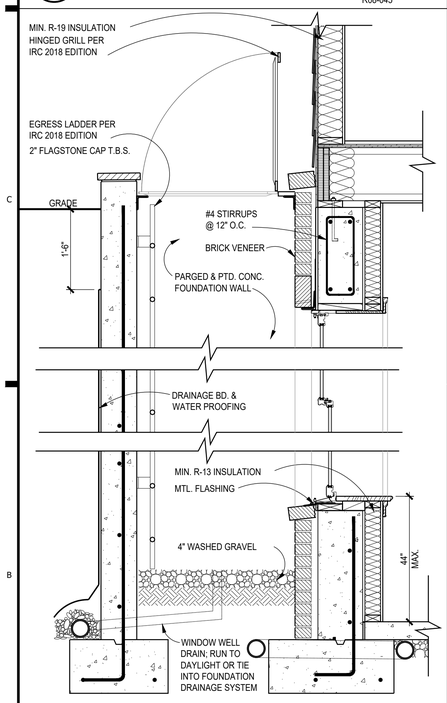

10 WINDOW WELL DETAIL, TYP.
SCALE: 3/4"=1'-0"
R03-021

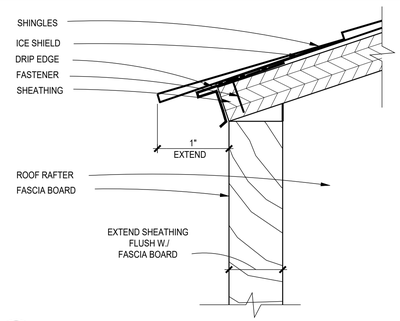

13 DRIP EDGE EAVE DETAIL
SCALE: 1"=1"
R04-051

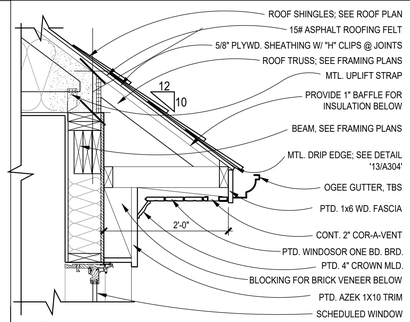

12 ROOF EAVE DETAIL
SCALE: 1 1/2" = 1'-0"
R08-016 (1X1)

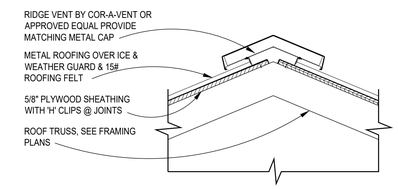

11 RIDGE DETAIL
SCALE: 1 1/2" = 1'-0"
??? (1X1)

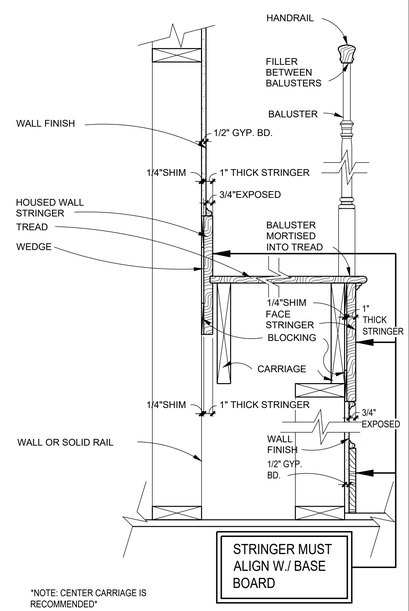

6 TYP. WOOD STAIR TRIM DETAIL
SCALE: 1 1/2"=1'-0"
R06-045

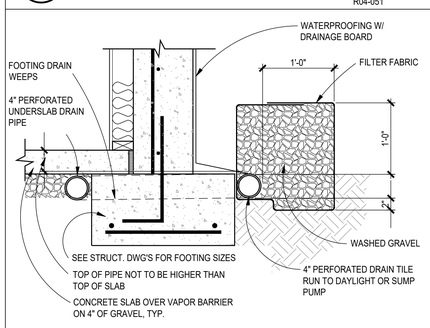

9 TYPICAL FOOTING DETAIL
SCALE: 1"=1'-0"
R01-035

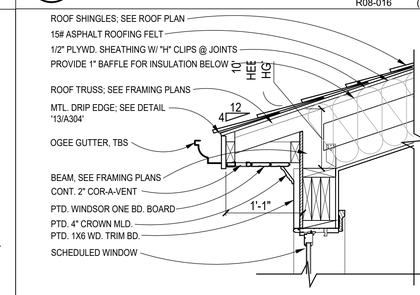

8 REAR SHED DORMER EAVE DETAIL
SCALE: 1" = 1'-0"
R08-016 (1X1)

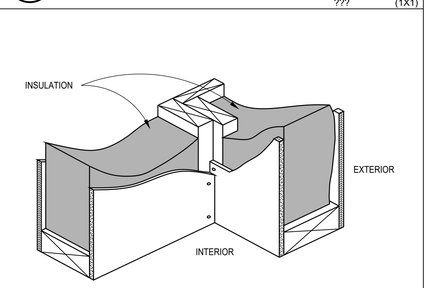

7 CORNER FRAMING DETAIL
SCALE: N.T.S.
R03-022 (1X1)

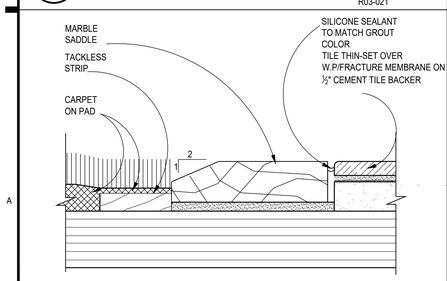

5 THRESHOLD DETAIL
SCALE: N.T.S.
R06-049 (1X1)

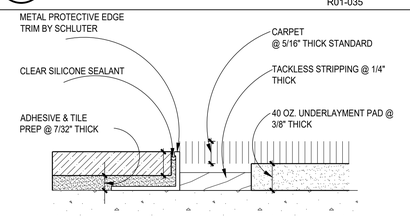

NOTE: TILE CONTRACTOR RESPONSIBLE TO ENGINEER FLUSH CONDITIONS WITH ALL DOOR OPENINGS AND CARPET INSETS, AND TO SUBMIT ANY DETAIL OR RAMPED THRESHOLDS TO GTM FOR APPROVAL. TILE CONTRACTOR RESPONSIBLE TO PREP AND INSTALL ALL TILE MATERIALS, AND TO KEEP PREMISES CLEAN DURING AND AFTER INSTALLATION. TILE CONTRACTOR RESPONSIBLE TO GROUT AND SEAL FINISHED INSTALLATION, AND SUBMIT COLORS FOR GROUTING MATERIALS TO GTM FOR APPROVAL, AND PROVIDE SPEC SHEETS ON SEALANTS, ALONG WITH MAINTENANCE SPECIFICATIONS.

4 TILE-TO-CARPET TRANSITION
SCALE: 12"=1'-0"
S14-001 (1X1)

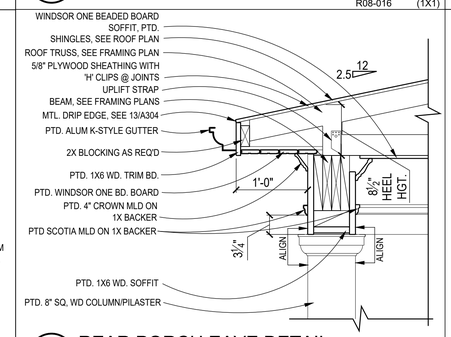

3 REAR PORCH EAVE DETAIL
SCALE: 1"=1'-0"
(1X1)

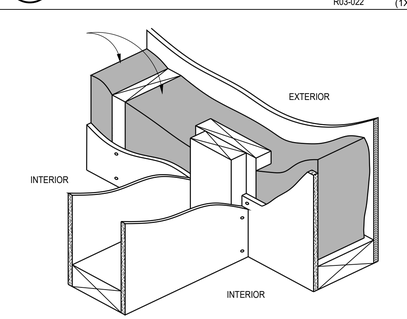

2 INTERSECTING WALL FRAMING
SCALE: N.T.S.
R03-023 (1X1)

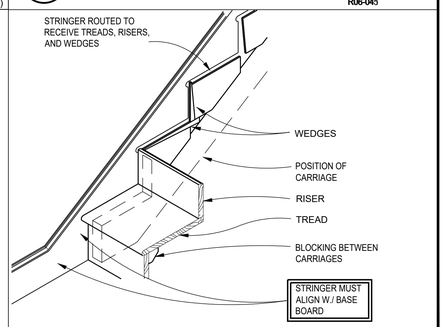

1 STAIR STRINGER
SCALE: 1"=1'-0"
R08-040

REVIEWED
By Michael Kyne at 2:02 pm, May 23, 2022

APPROVED
Montgomery County
Historic Preservation Commission

GTM ARCHITECTS
7735 OLD GEORGETOWN ROAD
SUITE 700
BETHESDA, MD 20814
(240)333-2000
(240)333-2001 FAX
WWW.GTMARCHITECTS.COM

Seal

I certify that these documents were prepared or approved by me, and that I am a duly licensed architect under the laws of the State of Maryland License number 8085, Expiration Date: 06.06.2022.

Consultant

Project
23 HIGH STREET LOT 2
23 HIGH STREET, BROOKEVILLE, MD 20833

Owner

Developer

PERMIT SET	4-11-2022

Issue Description	*Date*

GTM Project No.	18.0320
Checked By	GTM
Drawn By	LEO/NW
Scale	AS NOTED

Sheet Title
TYPICAL DETAILS

Sheet No.
A304

COPYRIGHT, 2022 GTM ARCHITECTS, INC.

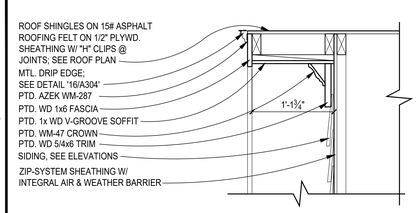

7 RAKE DETAIL
SCALE: 1" = 1'-0"
(1X1)

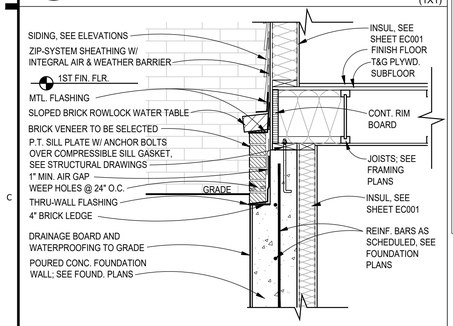

6 BRICK WATERTABLE DETAIL
SCALE: 1" = 1'-0"
(1X1)

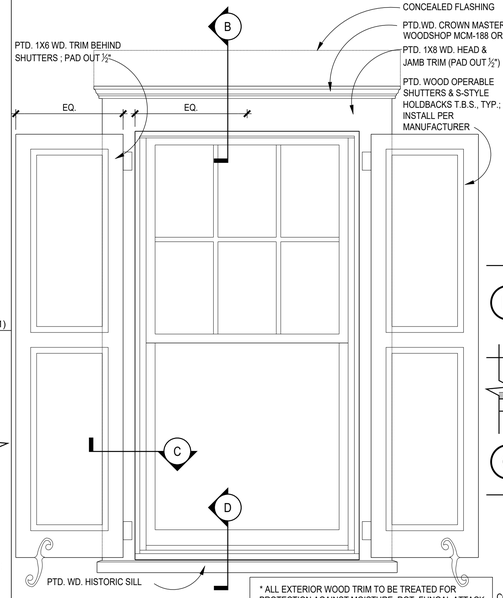

* ALL EXTERIOR WOOD TRIM TO BE TREATED FOR PROTECTION AGAINST MOISTURE, ROT, FUNGAL ATTACK & INSECTS, WINDSOR-ONE+, LIFESPAN OR EQ.

A ELEVATION
SCALE: 3/4"=1'-0"

5 TYP. EXT. WINDOW DETAILS @ SIDING
SCALE: AS NOTED

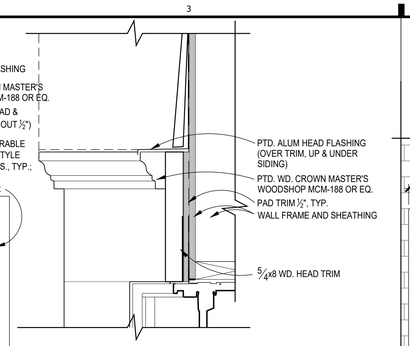

B HEAD DETAIL
SCALE: 3"=1'-0"

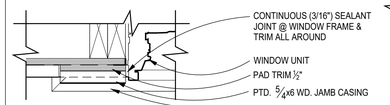

C JAMB DETAIL
SCALE: 3"=1'-0"

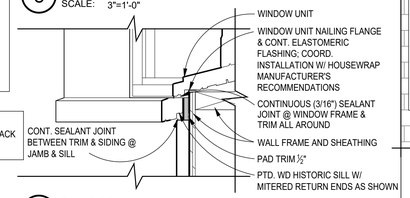

D SILL DETAIL
SCALE: 3"=1'-0"
(2X2)

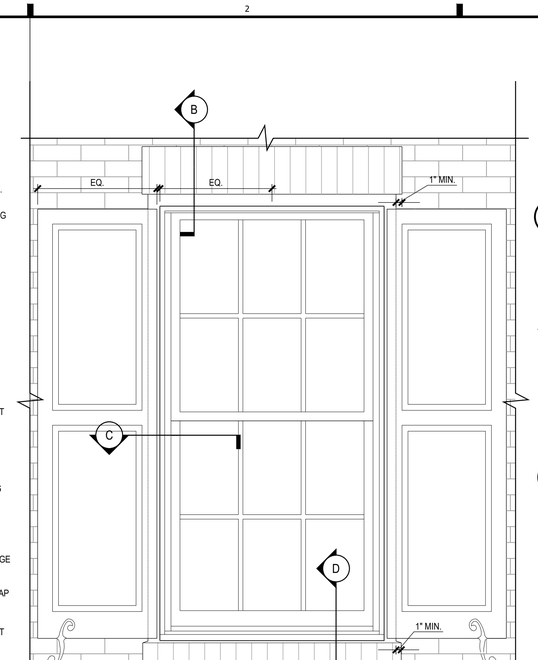

A ELEVATION
SCALE: 1"=1'-0"

4 TYP. EXT. WINDOW DETAILS @ BRICK
SCALE: AS NOTED
(2X2)

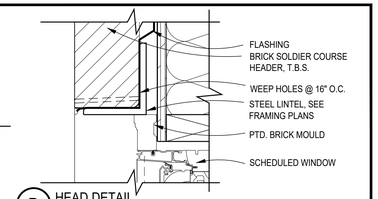

B HEAD DETAIL
SCALE: 3"=1'-0"

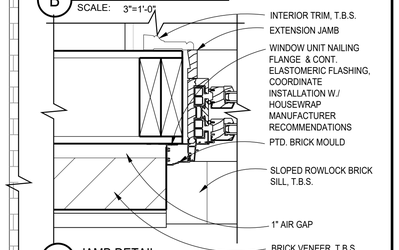

C JAMB DETAIL
SCALE: 3"=1'-0"

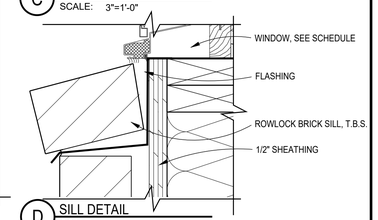

D SILL DETAIL
SCALE: 3"=1'-0"

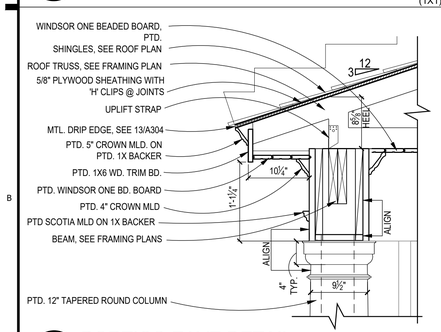

3 PORTICO EAVE DETAIL
SCALE: 1"=1'-0"
(1X1)

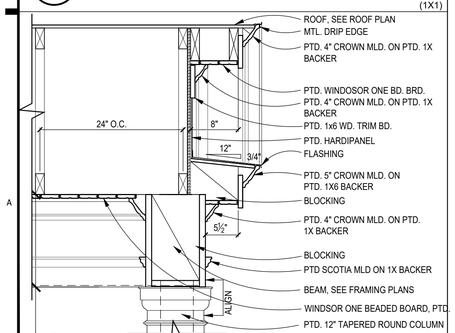

2 PORTICO RAKE DETAIL
SCALE: 1"=1'-0"
(1X1)

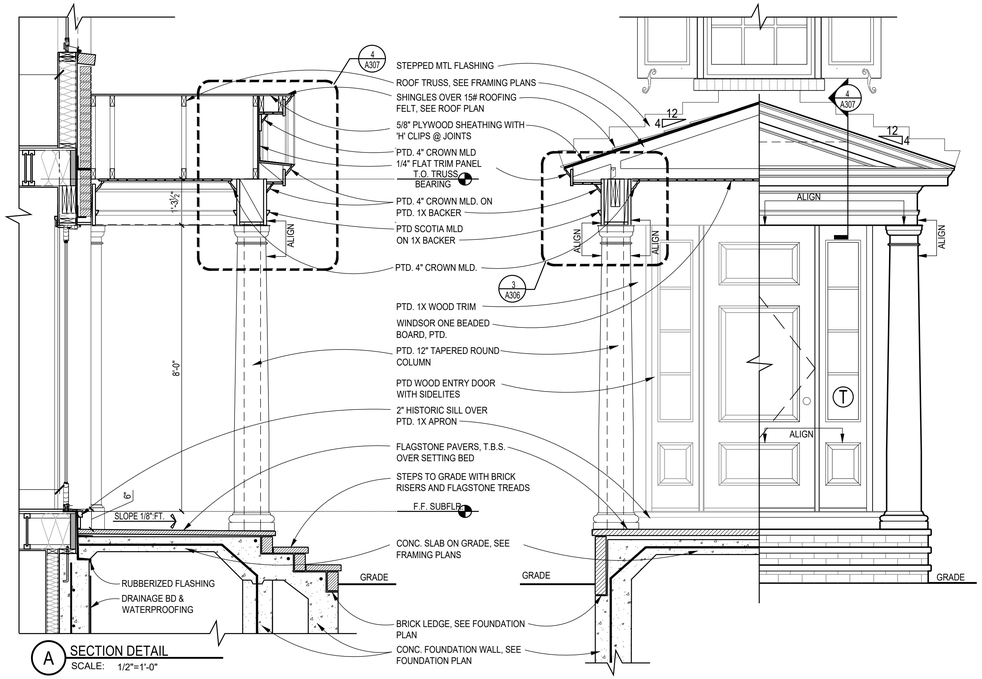

A SECTION DETAIL
SCALE: 1/2"=1'-0"

1 FRONT PORTICO DETAIL
SCALE: AS NOTED

B SECTION/ ELEVATION DETAIL
SCALE: 1/2"=1'-0"

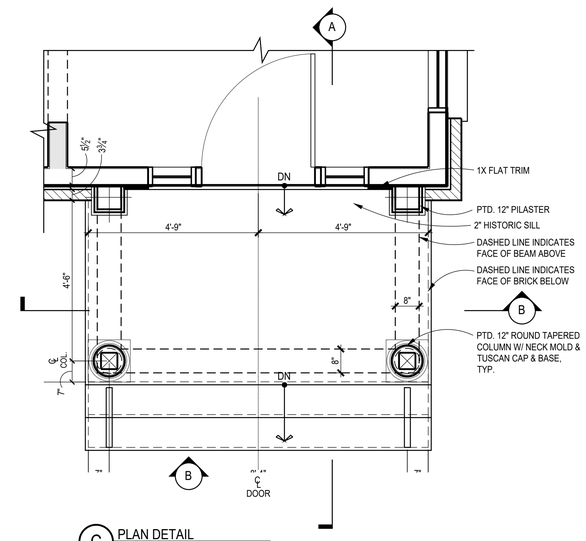

C PLAN DETAIL
SCALE: 1/2"=1'-0"

REVIEWED
By Michael Kyne at 2:02 pm, May 23, 2022

APPROVED
Montgomery County
Historic Preservation Commission

GTM ARCHITECTS

7735 OLD GEORGETOWN ROAD
SUITE 700
BETHESDA, MD 20814
(240)333-2000
(240)333-2001 FAX
WWW.GTMARCHITECTS.COM

Seal

STATE OF MARYLAND — STEVEN A. TOMLIN — No. 7281 — ARCHITECT

I certify that these documents were prepared or approved by me, and that I am a duly licensed architect under the laws of the State of Maryland, License number 6006, Expiration Date: 06/30/2024.

Consultant

Project

23 HIGH STREET LOT 2

23 HIGH STREET, BROOKEVILLE, MD 20833

Owner

Developer

PERMIT SET	4-11-2022

Issue Description	*Date*

GTM Project No.	18.0320
Checked By	GTM
Drawn By	LEO/NW
Scale	AS NOTED

Sheet Title

DETAILS

Sheet No.

A305

COPYRIGHT, 2022 GTM ARCHITECTS, INC.

FILE NAME:

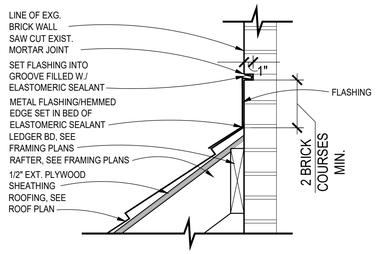

4 BASE & COUNTER-FLASHING DETAIL
SCALE: 1 1/2"=1'-0"

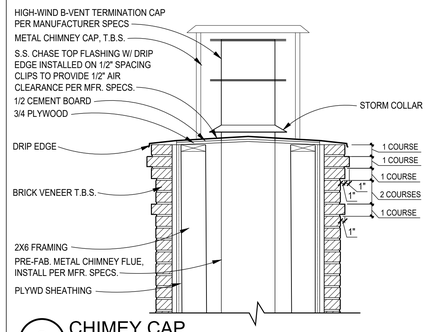

3 CHIMEY CAP
SCALE: 3/4"=1'-0"

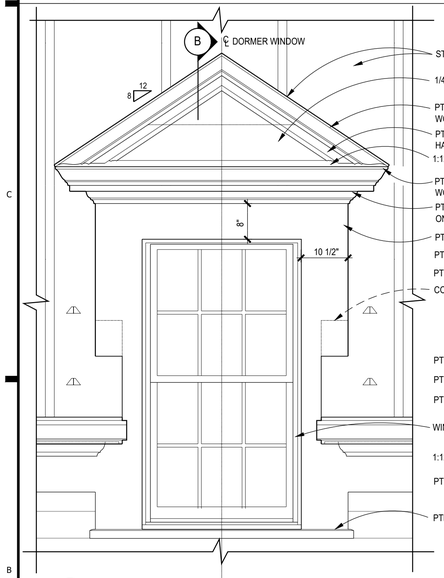

A FRONT ELEVATION
SCALE: 3/4"=1'-0"

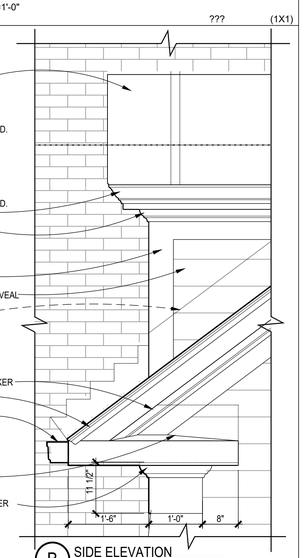

B SIDE ELEVATION
SCALE: 3/4"=1'-0"

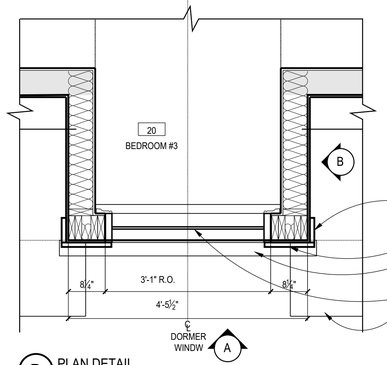

D PLAN DETAIL
SCALE: 3/4"=1'-0"

* ALL EXTERIOR WOOD TRIM TO BE TREATED FOR PROTECTION AGAINST MOISTURE, ROT, FUNGAL ATTACK & INSECTS, WINDSOR-ONE*, LIFESPAN OR EQ.

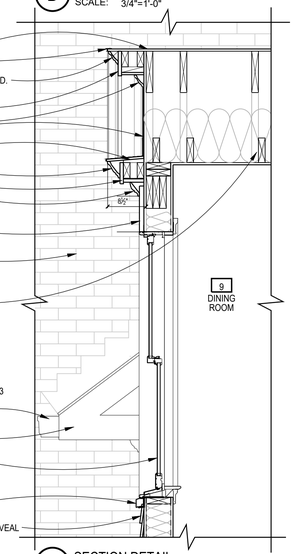

2 TYP. DORMER DETAILS
SCALE: AS NOTED

C SECTION DETAIL
SCALE: 3/4"=1'-0"

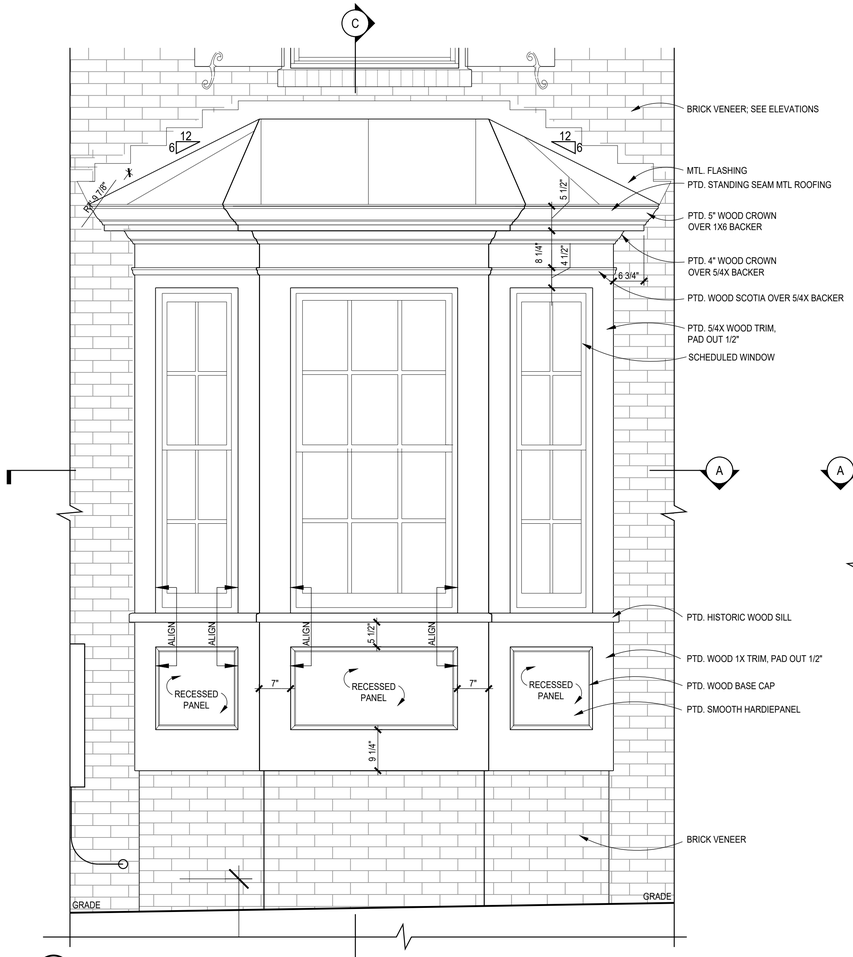

B FRONT ELEVATION
SCALE: 3/4"=1'-0"

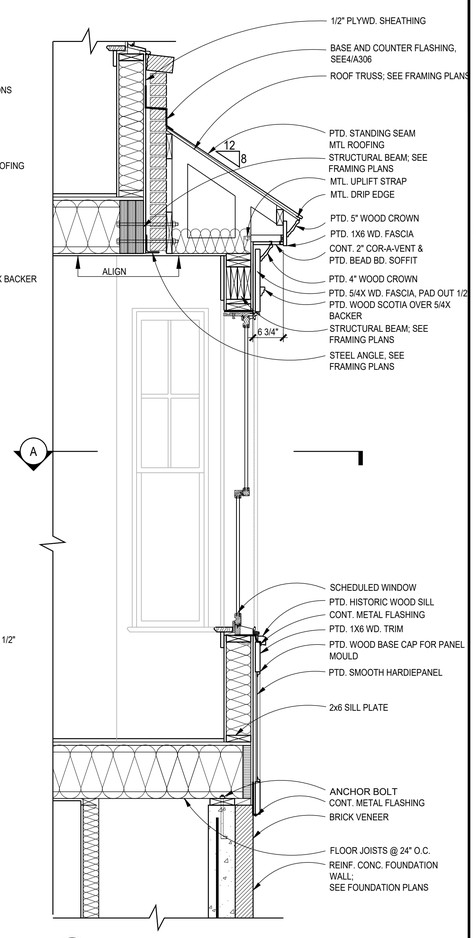

C BAY WINDOW SECTION
SCALE: 3/4"=1'-0"

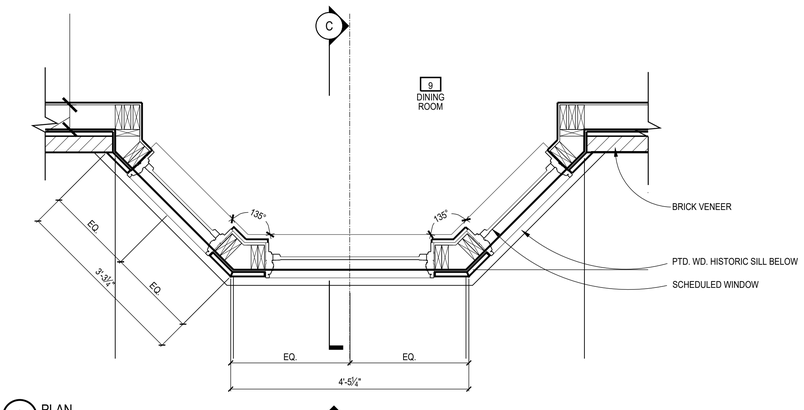

A PLAN
SCALE: 3/4"=1'-0"

1 BAY DETAILS
SCALE: AS NOTED

(3X4)

REVIEWED
By Michael Kyne at 2:05 pm, May 23, 2022

APPROVED
Montgomery County
Historic Preservation Commission

GTM ARCHITECTS
7735 OLD GEORGETOWN ROAD
SUITE 700
BETHESDA, MD 20814
(240)333-2000
(240)333-2001 FAX
WWW.GTMARCHITECTS.COM

Seal

I certify that these documents were prepared or approved by me, and that I am a duly licensed architect under the laws of the State of Maryland License number 8888, Expiration Date: 01.06.2023.

Consultant

Project
23 HIGH STREET LOT 2
23 HIGH STREET, BROOKEVILLE, MD 20833

Owner

Developer

PERMIT SET	4-11-2022
Issue Description	Date

GTM Project No.	18.0320
Checked By	GTM
Drawn By	LEO/NW
Scale	AS NOTED

Sheet Title
DETAILS

Sheet No.
A306

COPYRIGHT, 2022 GTM ARCHITECTS, INC.

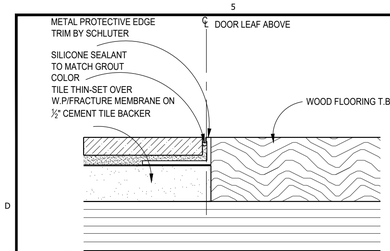

NOTE: TILE CONTRACTOR RESPONSIBLE TO ENGINEER FLUSH CONDITIONS WITH ALL DR. OPENINGS & WOOD/CARPET INSETS, & TO SUBMIT ANY DETAIL OR RAMPED THRESHOLDS TO GTM FOR APPROVAL. TILE CONTRACTOR RESPONSIBLE TO PREP & INSTALL ALL TILE MATERIALS, & TO KEEP PREMISES CLEAN DURING & AFTER INSTALLATION. TILE CONTRACTOR RESPONSIBLE TO GROUT & SEAL FINISHED INSTALLATION, & SUBMIT COLORS FOR GROUTING MATERIALS TO GTM FOR APPROVAL, & PROVIDE SPEC SHEETS ON SEALANTS, ALONG WITH MAINTENANCE SPECS. FOR FLOOR AREAS W/ RADIUS, USE EDGE TRIM W/ RADIUS PERFORATIONS, SCHLUTER "SCHIENE" OR SIM.

20 TILE-TO-WOOD TRANSITION

SCALE: 12"=1'-0"

R06-050 (1X1)

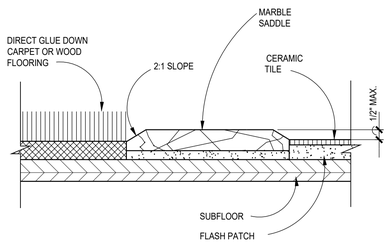

19 THRESHOLD DETAIL

SCALE: N.T.S.

S14-003 (1X1)

18 NOT USED

SCALE: 1 1/2"=1'-0"

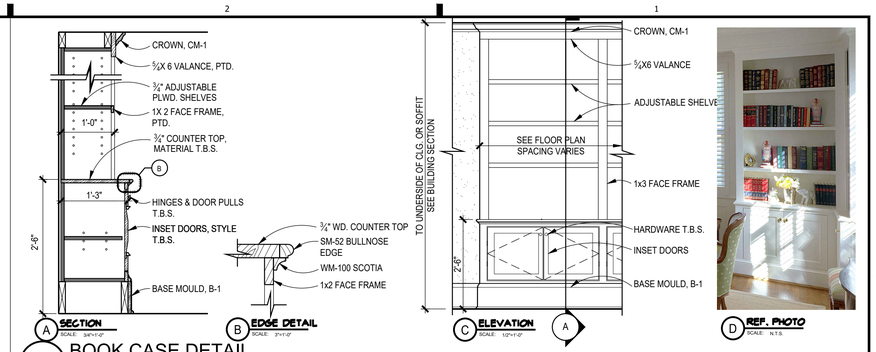

17 BOOK CASE DETAIL

SCALE: AS NOTED

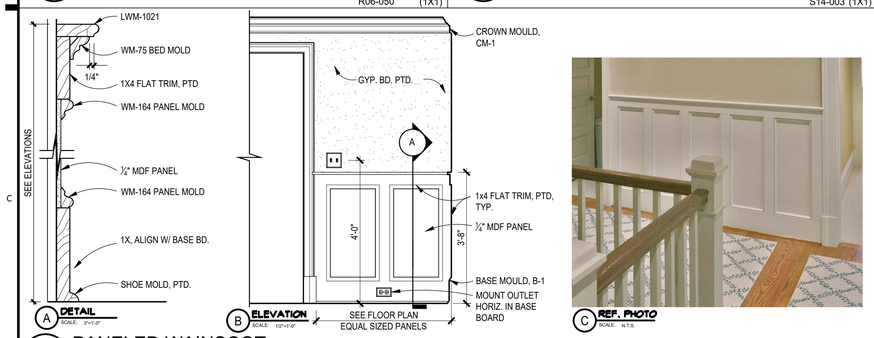

15 PANELED WAINSCOT

SCALE: AS NOTED

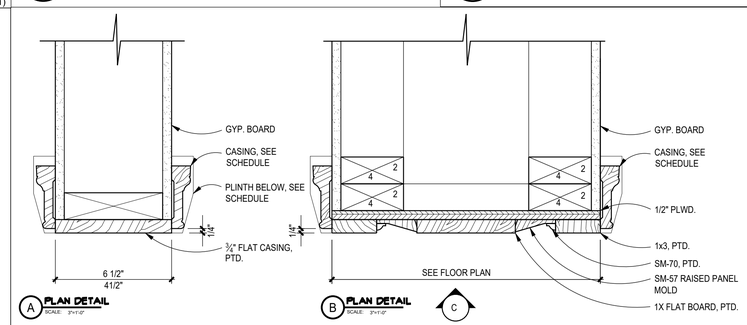

13 CASED OPENING DETAILS

SCALE: AS NOTED

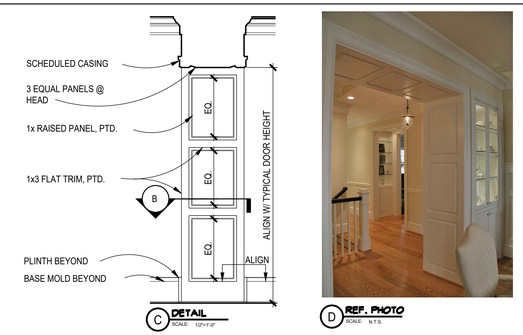

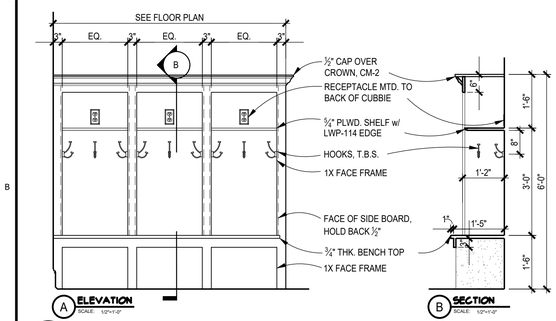

10 TYPICAL MUDROOM CUBBIES

SCALE: 1/2"=1'-0"

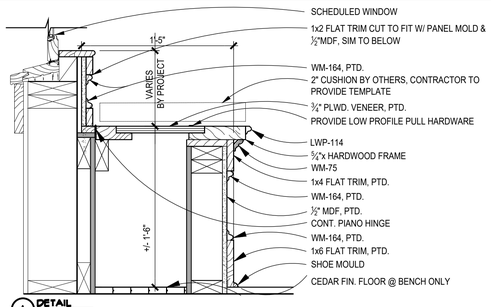

8 BENCH SEAT DETAIL

SCALE: AS NOTED

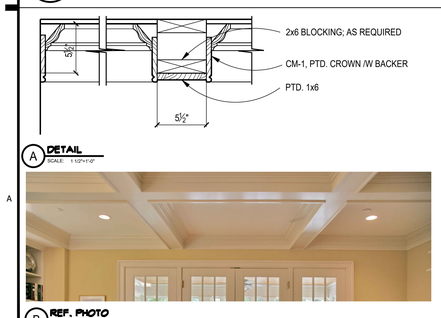

5 COFFERED CEILING DETAIL

SCALE: 1 1/2"=1'-0"

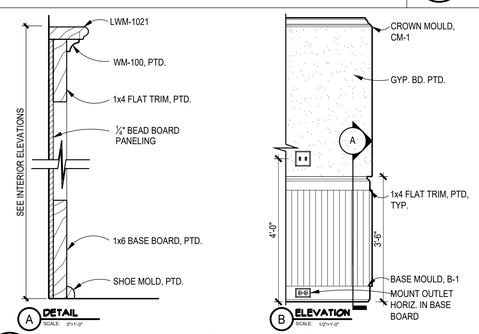

4 BEAD BD. WAINSCOT DETAILS

SCALE: AS NOTED

2 TYPICAL BATHROOM DETAILS

SCALE: 1/2"=1'-0"

REVIEWED
By Michael Kyne at 2:02 pm, May 23, 2022

APPROVED
Montgomery County
Historic Preservation Commission

GTM ARCHITECTS
7735 OLD GEORGETOWN ROAD
SUITE 700
BETHESDA, MD 20814
(240)333-2000
(240)333-2001 FAX
WWW.GTMARCHITECTS.COM

Seal

I certify that these documents were prepared or approved by me, and that I am a duly licensed architect under the laws of the State of Maryland License number 8085, Expiration Date: 06-06-2024.

Consultant

Project

23 HIGH STREET LOT 2

23 HIGH STREET, BROOKEVILLE, MD 20833

Owner

Developer

PERMIT SET	4-11-2022

Issue Description	*Date*

GTM Project No.	18.0320
Checked By	GTM
Drawn By	LEO/NW
Scale	AS NOTED

Sheet Title

DETAILS

Sheet No.

A307

COPYRIGHT, 2022 GTM ARCHITECTS, INC.

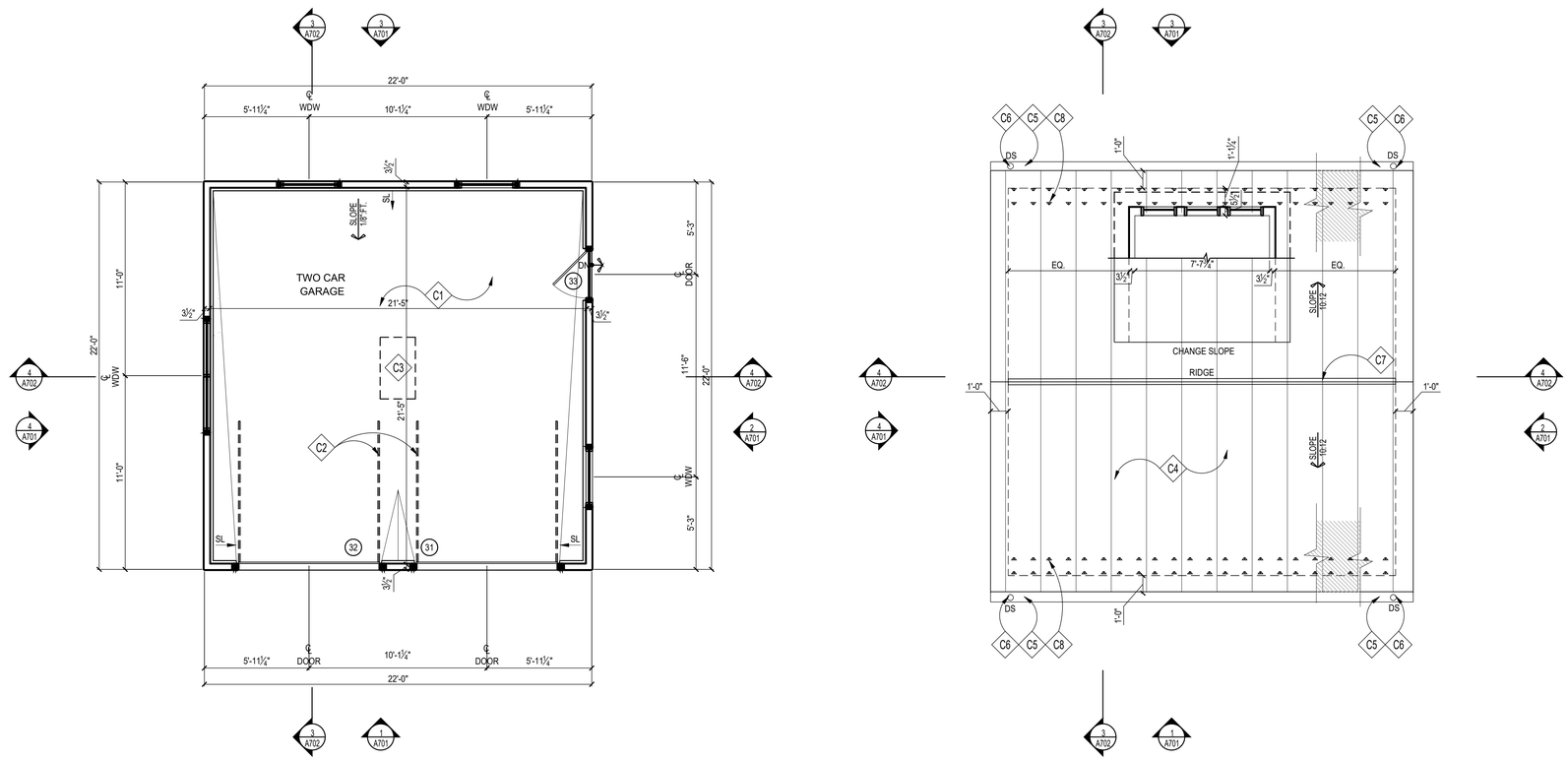

1 GARAGE PLAN
SCALE: 1/4"=1'-0"

2 ROOF PLAN
SCALE: 1/4"=1'-0"

CONSTRUCTION NOTES

- C1 REINF. CONC. SLAB; SEE FOUNDATION PLAN
- C2 GARAGE DOOR TRACKS ABOVE
- C3 ATTIC ACCESS PANEL W/ PULL DOWN STAIR
- C4 STANDING SEAM METAL ROOF, T.B.S., MATCH MAIN HOUSE
- C5 GUTTER TO MATCH MAIN HOUSE
- C6 DOWNSPOUT TO MATCH MAIN HOUSE; SEE CIVIL DRAINAGE PLAN FOR ADDITIONAL INFO
- C7 RIDGE/HIP VENTS BY COR-A-VENT OR APPROVED EQUAL
- C8 PAD-STYLE MTL. SNOW GUARDS SPACED IN TWO ROWS, 2 PER PANEL INSTALL PER MANUF. SPECS

ROOFING NOTES

1. MEMBRANE ROOF SHALL BE 60 MIL, WHITE PVC, ASTM D 4434, TYPE III, FABRIC REINFORCED. THE MEMBRANE SHALL BE ADHERED TO MECHANICALLY FASTENED, POLYISOCYANURATE BOARD INSULATION ASTM C 1289, FELT OR GLASS-FIBER MAT FACER ON BOTH MAJOR SURFACES. TAPERED INSULATION SHALL BE FACTORY-MADE TO A MINIMUM SLOPE OF 1/4" PER FOOT. INSULATION SHALL BE INSTALLED IN TWO LAYERS WITH JOINTS STAGGERED.
2. PROVIDE FLASHING FOR MIN. 8" EACH SIDE OF ALL VALLEYS & PITCH CHANGES

WALL TYPES

TYPICAL EXTERIOR WALL: 2x4 WOOD STUDS 16" O.C. W/ VAPOR BARRIER, 1/2" OSB SHEATHING, TYVEK STUCCO WRAP, & PTD. SIDING TO MATCH MAIN HOUSE; SEE ELEVATIONS.

REVIEWED
By Michael Kyne at 2:02 pm, May 23, 2022

APPROVED
Montgomery County
Historic Preservation Commission

GTM ARCHITECTS

7735 OLD GEORGETOWN ROAD
SUITE 700
BETHESDA, MD 20814
(240)333-2000
(240)333-2001 FAX
WWW.GTMARCHITECTS.COM

Seal

I certify that these documents were prepared or approved by me, and that I am a duly licensed architect under the laws of the State of Maryland. License number 8385, Expiration Date: 12-06-2022.

Consultant

Project
23 HIGH STREET LOT 2
23 HIGH STREET, BROOKEVILLE, MD 20833

Owner

Developer

Issue Description	Date
PERMIT SET	4-11-2022

GTM Project No.	18.0320
Checked By	GTM
Drawn By	LEO/NW
Scale	AS NOTED

Sheet Title
GARAGE FLOOR PLANS

Sheet No.
A700

COPYRIGHT, 2022 GTM ARCHITECTS, INC.

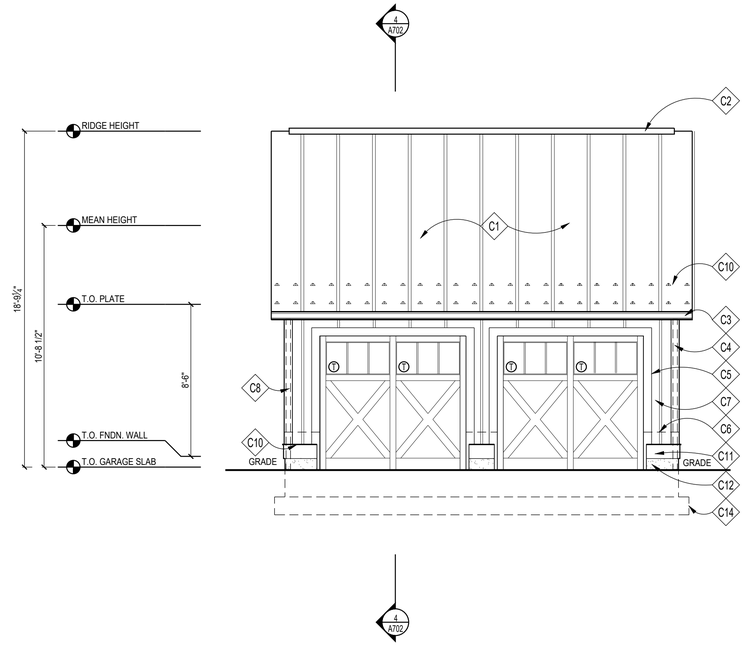

1 FRONT ELEVATION
SCALE: 1/4"=1'-0"

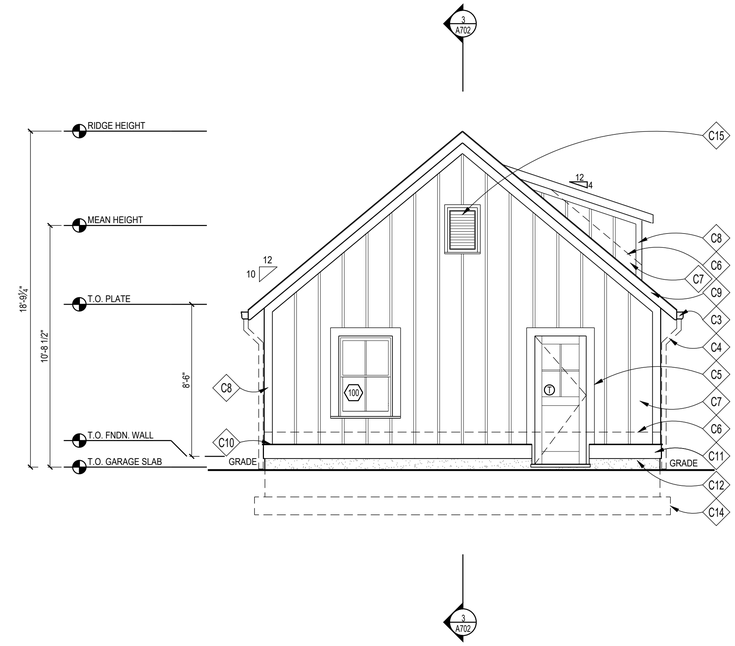

2 RIGHT SIDE ELEVATION
SCALE: 1/4"=1'-0"

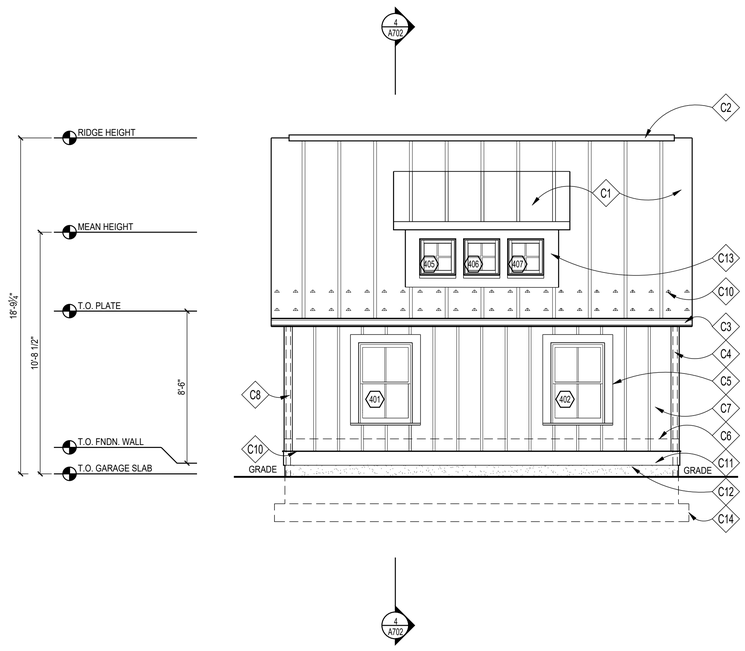

3 REAR ELEVATION
SCALE: 1/4"=1'-0"

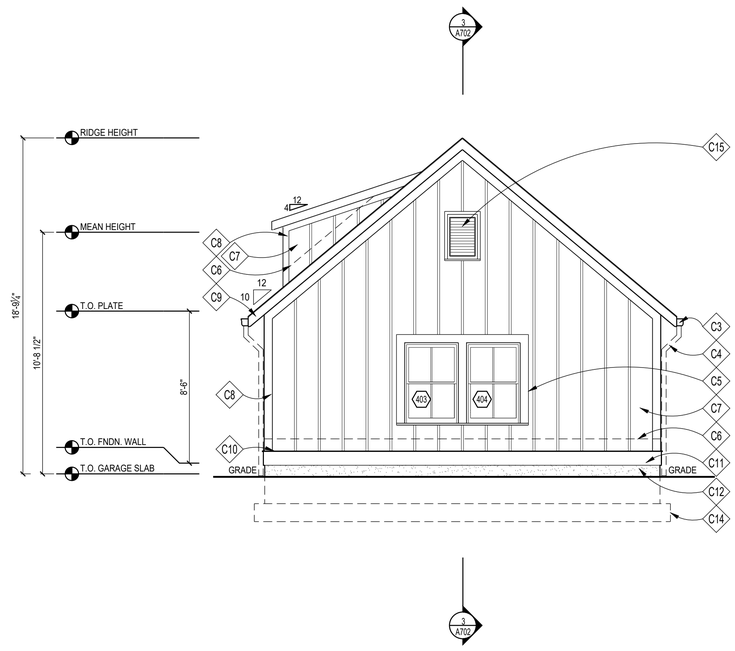

4 LEFT SIDE ELEVATION
SCALE: 1/4"=1'-0"

CONSTRUCTION NOTES

C1	STANDING SEAM METAL ROOF, T.B.S.
C2	RIDGE/HIP VENTS BY COR-A-VENT OR APPROVED EQUAL
C3	OGEE GUTTER (ON 1x6 PTD. FASCIA BD.)
C4	DOWNSPOUT TO MATCH MAIN HOUSE; SEE CIVIL DRAINAGE PLAN FOR ADDITIONAL INFO
C5	PTD. 1X6 WOOD HEAD & JAMB TRIM W/ HISTORIC SILL, TYP.
C6	CONCEALED FLASHING & COUNTER FLASHING @ ALL VERTICAL TRANSITIONS, TYP. EXTEND MIN. 8" BEHIND SIDING. COLOR T.B.S.
C7	PTD. WD. BOARD & BATTEN SIDING
C8	PTD. 1x6 WD. CORNERBOARD
C9	PTD. 1X6 WOOD RAKE/FASCIA
C10	POD-STYLE MTL. SNOW GUARDS SPACE @ 24" O.C., STAGGERED W/ ROW BELOW
C11	PTD. 1x 10 WOOD TRIMBAND W/ SLOPED 1X WOOD DRIP CAP
C12	PARGED & PTD. CONC. FOUNDATION WALL WHERE EXPOSED
C13	PTD. 1X WD. TRIM; CUT TO FIT @ FRONT OF DORMERS
C14	LINE OF FOOTING BELOW
C15	FYPON EBLV 18X30 ATTIC VENT W/ INSECT SCREEN BEHIND

REVIEWED
By Michael Kyne at 2:02 pm, May 23, 2022

APPROVED
Montgomery County
Historic Preservation Commission

GTM ARCHITECTS
7735 OLD GEORGETOWN ROAD
SUITE 700
BETHESDA, MD 20814
(240)333-2000
(240)333-2001 FAX
WWW.GTMARCHITECTS.COM

Seal

I certify that these documents were prepared or approved by me, and that I am a duly licensed architect under the laws of the State of Maryland. License number 8385. Expiration Date: 12-06-2022

Consultant

Project
23 HIGH STREET LOT 2
23 HIGH STREET, BROOKEVILLE, MD 20833

Owner

Developer

PERMIT SET	4-11-2022
Issue Description	Date

GTM Project No.	18.0320
Checked By	GTM
Drawn By	LEO/NW
Scale	AS NOTED

Sheet Title
GARAGE ELEVATIONS

Sheet No.
A701

COPYRIGHT, 2022 GTM ARCHITECTS, INC.

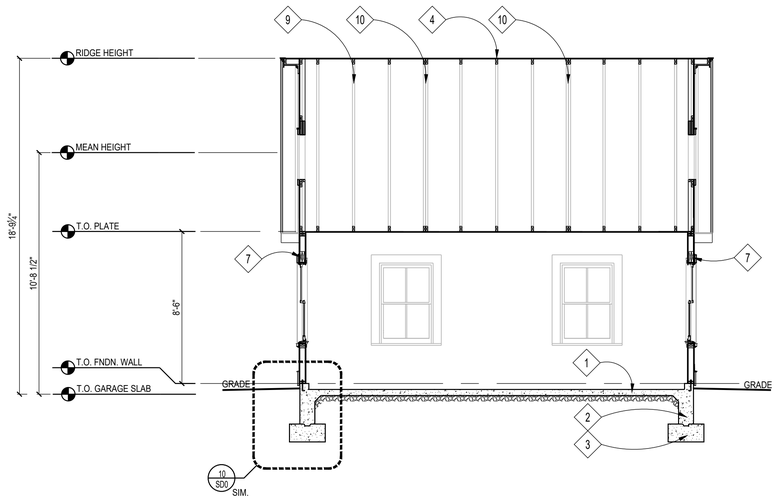

3 BUILDING SECTION
SCALE: 1/4"=1'-0"

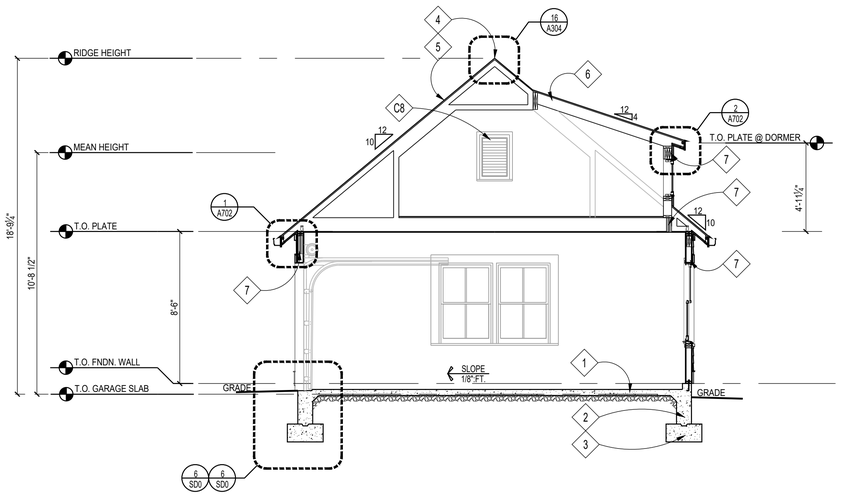

4 BUILDING SECTION
SCALE: 1/4"=1'-0"

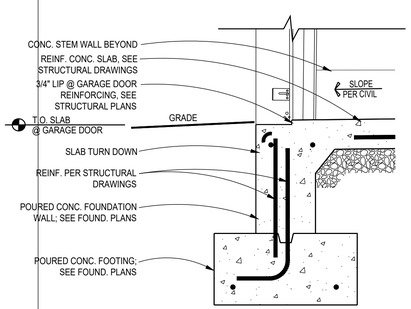

7 TYP. GARAGE DOOR DETAIL
SCALE: 1"=1'-0"
(1X2)

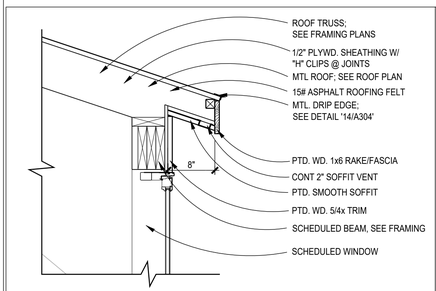

2 DORMER SOFFIT DETAIL
SCALE: 1" = 1'-0"
(1X1)

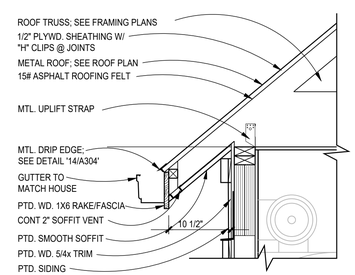

1 GARAGE SOFFIT DETAIL
SCALE: 1" = 1'-0"
(1X1)

CONSTRUCTION NOTES

1	REINF. CONC. SLAB; SEE FOUNDATION PLAN
2	CONCRETE FOUNDATION WALL; SEE FOUNDATION PLAN
3	FOOTING; SEE FOUNDATION PLAN
4	RIDGE/HIP VENTS BY COR-A-VENT OR APPROVED EQUAL
5	SEE NOTE #1 UNDER GENERAL ROOFING NOTES, TYP.
6	2x RAFTERS/CEILING JOISTS, SEE FRAMING PLAN
7	BEAM, SEE FRAMING PLAN
8	FYPON EBLV 18X30 ATTIC VENT W/ INSECT SCREEN BEHIND
C9	ROOF TRUSSES BY TRUSS MANUFACTURER; SEE FRAMING PLANS
C10	GIRDER TRUSS BY TRUSS MANUFACTURER; SEE FRAMING PLANS

REVIEWED
By Michael Kyne at 2:02 pm, May 23, 2022

APPROVED
Montgomery County
Historic Preservation Commission

GTM ARCHITECTS
7735 OLD GEORGETOWN ROAD
SUITE 700
BETHESDA, MD 20814
(240)333-2000
(240)333-2001 FAX
WWW.GTMARCHITECTS.COM

Seal

Consultant

Project
23 HIGH STREET
LOT 2
23 HIGH STREET, BROOKEVILLE, MD 20833

Owner

Developer

Issue Description	Date
PERMIT SET	4-11-2022

GTM Project No.	18.0320
Checked By	GTM
Drawn By	LEO/NW
Scale	AS NOTED

Sheet Title
GARAGE SECTIONS & DETAILS

Sheet No.
A702

COPYRIGHT, 2022 GTM ARCHITECTS, INC.

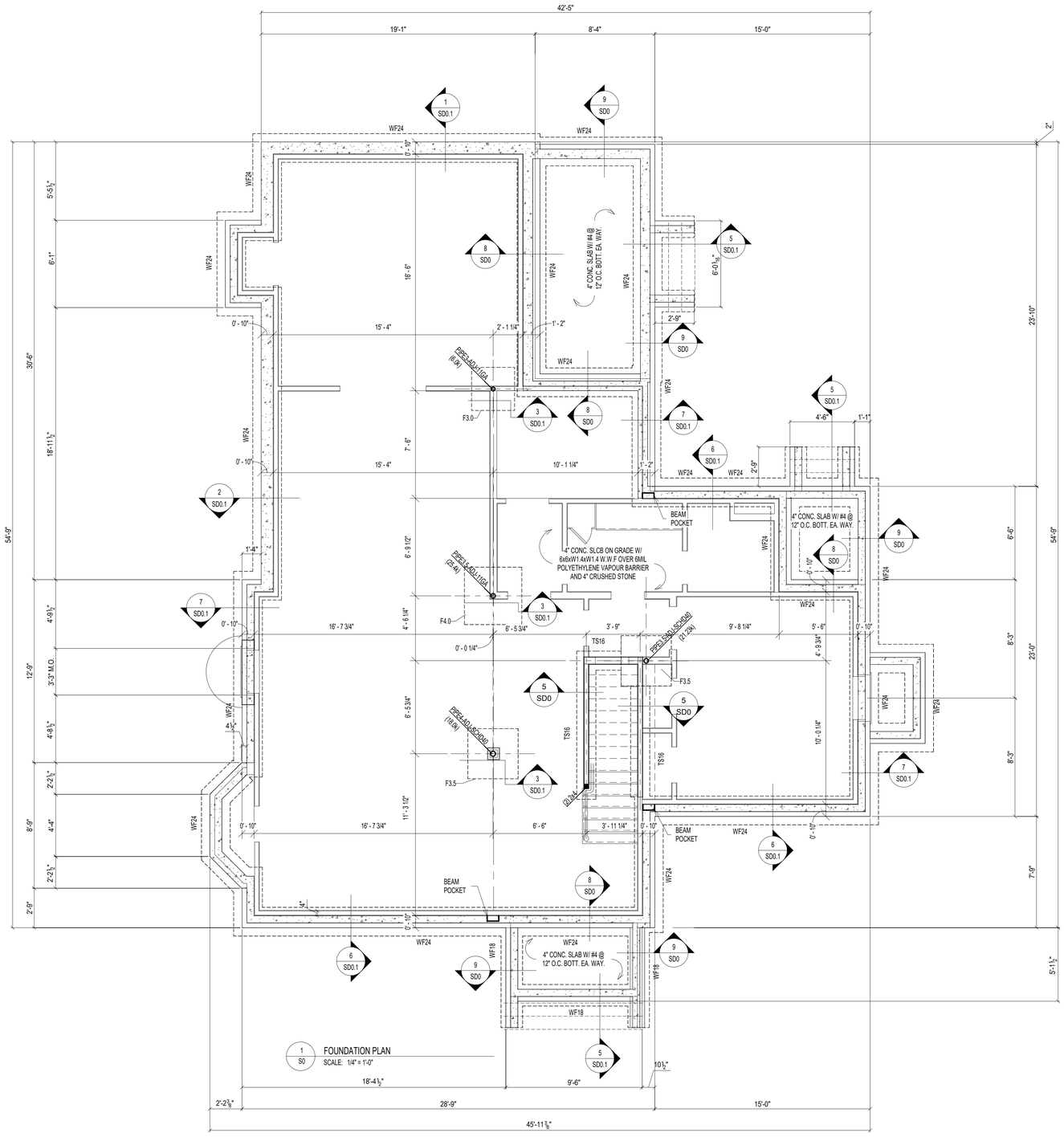

1 S0 FOUNDATION PLAN
SCALE: 1/4" = 1'-0"

LEGENDS:

TS = THICKENED SLAB
WF = WALL FOOTING
F = FOOTING

FOUNDATION NOTES:

1. FOUNDATION DESIGN IS BASED ON ASSUMED DESIGN CRITERIA AS SPECIFIED ON GENERAL NOTES SHEET. AND SHALL BE FIELD VERIFIED BY GEOTECHNICAL ENGINEER. NOTIFY ENGINEER IF ANY DESCRIPANCIES ARE FOUND OR CRITERIA DIFFERS FROM ASSUMED CRITERIA.
2. VERIFY AND COORDINATE ALL DIMENSIONS WITH ARCHITECTURAL AND CIVIL DRAWINGS. NOTIFY ENGINEER IF ANY COORINDATION IS REQUIRED.
3. BASEMENT SLAB SHALL BE 4" CONC. SLAB ON GRADE WITH 6x6xW1.4xW1.4 W.W.F U.N.O.
4. ALL EXTERIOR FOOTINGS SHALL BE LOWERED TO MINIMUM FROST DEPTH AS REQUIRED BY LOCAL JURISDICTIONS.
5. PROVIDE MIN. 3'-0"x3'-0"x12" CONC. FOOTING W/ #5 @ 12" O.C. BOTT. EA. WAY. UNDER EACH POST UNLESS NOTED OTHERWISE ON FOUDATION PLAN.
6. PROVIDE MIN. 16"x12" CONC. THICKENED SLAB UNDER BEARING WALLS UNLESS NOTED OTHERWISE.
7. PROVIDE MIN. 24"x8" CONC. WALL FOOTING W/ MIN. (2) #4 CONT. AT BOTT. UNDER ALL FOUNDATION WALLS UNLESS NOTED OTHERWISE.
8. PROVIDE WATERPROOFING, DAMP PROOFING PER APPLICABLE CODES AT FOUNDATION WALL, FOOTINGS AND SLABS.
9. INSTALL CONTINUOUS 4"Ø PERFORATED DRAIN PIPES ON EACH SIDE OF FOOTING. CONNECTED WITH 1 1/2"Ø WEEP HOLES @ 8'-0" O.C. AND DRAIN TO SUMP PUMP OR DAY LIGHT.

PLAN LEGENDS & SYMBOLS:

- INDICATES BEARING WALL
- INDICATES DRAIN HOLE FROM ABOVE
- INDICATES JOIST/TRUSS HANEGR (REFER TO SHOP DWGS)
- INDICATES FRAMING DIRECTION
- INDICATES REBAR DIRECTION
- (_J+_S) — INDICATES NO. OF KING STUDS AT EACH END; INDICATES NO. OF JACK STUDS AT EACH END
- WF?? — INDICATES WALL FOOTING; WIDTH OF WALL FOOTING IN INCHES
- TS?? — INDICATES THICKENED SLAB; WIDTH OF THICKENED SLAB IN INCHES
- Fx.x — INDICATES ISOLATED COLUMN FOOTING; INDICATES SIZE OF FOOTING IN DECIMAL FEET
- ML?? — MICROLAM LVL 2.0E; DEPTH OF MICROLAM LVL IN INCHES
- LSL?? — LAMINATED STRAND LUMBER 1.7E; DEPTH OF TIMBERSTAND LSL BEAM IN INCHES
- PSL?? — PARALLAM STRAND LUMBER 2.0E; WIDTHxDEPTH OF MEMBER
- CC — COLUMN CAP
- CB — COLUMN BASE
- HD — HOLD DOWN ANCHOR
- MS — METAL STRAP
- H — JOIST/TRUSS/BEAM HANGER
- HC — HURRICANE CLIPS

BASEMENT FOUNDATION WALL SCHEDULE (MAX. UNSPPORTED HEIGHT = 9'-0")

THICKNESS	UNBALANCED BACK FILL HEIGHT	VERTICAL REBARS (E.F.P. = 30 PSF/FT)	VERTICAL REBARS (E.F.P. = 45 PSF/FT)	VERTICAL REBARS (E.F.P. = 60 PSF/FT)	HORIZONTAL REBARS
8"	UP TO 5'-0"	NOT REQD.	NOT REQD.	NOT REQUIRED	#4 @ 24" O.C.
	5'-0" < HT < 6'-0"	NOT REQD.	NOT REQD.	#5 @ 36" O.C.	
	6'-0" < HT < 7'-0"	NOT REQD.	#5 @ 36" O.C.	#5 @ 24" O.C.	
	7'-0" < HT < 8'-0"	#4 @ 24" O.C.	#5 @ 24" O.C.	#5 @ 20" O.C.	
	8'-0" < HT < 9'-0"	#4 @ 18" O.C.	#5 @ 20" O.C.	#5 @ 16" O.C.	

NOTE:
1. BASED ON TABLE 3.12 OF PCA-100 "PRESCRIPTIVE DESIGN OF EXTERIOR CONCRETE WALLS" WITH FOLLOWING CRITERIA
2. fC' = 3000 psi & Fy = 60000 ksi
3. E.F.P. = EQUIVALENT EARTH PRESSURE
4. MAXIMUM WALL HEIGHT = 9'-0"
5. MIN. COVER TO REINFORCEMENT AT INSIDE FACE = 3/4" & MIN. COVER TO REINFORCEMENT AT OUTSIDE FACE = 1 1/2"
6. PROVIDE MINIMUM ONE #4 REBAR 12" FROM TOP & BOTTOM.
7. PROVIDE PROPER DRAINAGE TO THE BACKFILL REFER TO ARCHITECTURAL DRAWINGS FOR DRAINAGE AND WATEPROOFING
8. REFER TO GEOTECHNICAL REPORT FOR ALL FURTHER RECOMMENDATIONS. GEOTECHNICAL ENGINEER TO VERIFY FOUNDATION DESIGN CRITERIA FOR SOIL BEARING CAPACTY AND EARTH PRESSURE.
9. REBARS CAN BE SUBSTITUTED WITH #4 REBARS TO MATCH SPECIFIED AREA OF REINFORCEMENT IN ABOVE TABLE

BASEMENT FOUNDATION WALL SCHEDULE (MAX. UNSPPORTED HEIGHT = 9'-0")

THICKNESS	UNBALANCED BACK FILL HEIGHT	VERTICAL REBARS (E.F.P. = 30 PSF/FT)	VERTICAL REBARS (E.F.P. = 45 PSF/FT)	VERTICAL REBARS (E.F.P. = 60 PSF/FT)	HORIZONTAL REBARS
10"	UP TO 6'-0"	NOT REQD.	NOT REQD.	NOT REQD.	#4 @ 24" O.C.
	6'-0" < HT < 7'-0"	NOT REQD.	NOT REQD.	#4 @ 24" O.C.	
	7'-0" < HT < 8'-0"	NOT REQD.	#4 @ 18" O.C.	#4 @ 16" O.C.	
	8'-0" < HT < 9'-0"	NOT REQD.	#4 @ 16" O.C.	#4 @ 12" O.C.	

NOTE:
1. BASED ON TABLE A.4 OF ACI 332-10 WITH FOLLOWING CRITERIA
2. fC' = 3000 psi & Fy = 60000 ksi
3. E.F.P. = EQUIVALENT EARTH PRESSURE
4. MAXIMUM WALL HEIGHT = 9'-0"
5. MIN. COVER TO REINFORCEMENT AT INSIDE FACE = 3/4" & MIN. COVER TO REINFORCEMENT AT OUTSIDE FACE = 1 1/2"
6. PROVIDE MINIMUM ONE #4 REBAR 12" FROM TOP & BOTTOM.
7. PROVIDE PROPER DRAINAGE TO THE BACKFILL REFER TO ARCHITECTURAL DRAWINGS FOR DRAINAGE AND WATEPROOFING
8. REFER TO GEOTECHNICAL REPORT FOR ALL FURTHER RECOMMENDATIONS. GEOTECHNICAL ENGINEER TO VERIFY FOUNDATION DESIGN CRITERIA FOR SOIL BEARING CAPACTY AND EARTH PRESSURE.

COLUMN FOOTING SCHEDULE

MARK	DESCRIPTION
F3.0	3'-0" x 3'-0" x 12" CONC. FTG W/ #4 @ 12" O.C. BOTT. EA. WAY
F3.5	3'-6" x 3'-6" x 12" CONC. FTG W/ #4 @ 12" O.C. BOTT. EA. WAY
F4.0	4'-0" x 4'-0" x 12" CONC. FTG W/ #5 @ 12" O.C. BOTT. EA. WAY

CONCRETE LINTEL SCHEDULE

MARK	DESCRIPTION
CB812	8" x 12" CONC. LINTEL W/ (2) #5 CONT. @ BOTT.
CB1012	10" x 12" CONC. LINTEL W/ (2) #5 CONT. @ BOTT.

WALL FOOTING SCHEDULE

MARK	DESCRIPTION
TS16	16" x 8" CONC. THICKENED SLAB W/ (2) #4 CONT. @ BOTT.
WF18	18" x 8" CONC. FTG. W/ (2) #4 CONT. @ BOTT.
WF24	24" x 8" CONC. FTG. W/ (2) #4 CONT. @ BOTT.

REVIEWED
By Michael Kyne at 2:05 pm, May 23, 2022

APPROVED
Montgomery County
Historic Preservation Commission

© COPYRIGHT 2016
Structural Engineering content of this drawings are property of structBIM LLC and are issued for this project only. Any re-use or re-production of these drawings shall not be done without written consent of structBIM LLC. These drawings are to be read in conjuction with project specifications and drawings from other consultants. These drawings shall not be used as shop drawings. Do not scale drawings, use dimensions as specified.

GTM ARCHITECTS

7735 OLD GEORGETOWN ROAD
SUITE 700
BETHESDA, MD 20814
(240)333-2000
(240)333-2001 FAX
WWW.GTMARCHITECTS.COM

GTM

Seal

STATE OF MARYLAND — KENDAL KANDAL — 40082 — PROFESSIONAL ENGINEER

Consultant

structBIM ENGINEERS
WE DESIGN....WE BIM
46400 BENEDICT DR, SUITE #211
PHONE: 703-657-4481
E-MAIL: info@structBIM.com

Project

23 HIGH STREET, LOT 2,
BROOKVILLE, MD

I certify that these documents were prepared or approved by me, and that I am a duly licensed Professional Engineer under the laws of the State of Maryland, license number 40082, Expiration Date: 02-13-2023.

Issue Description	*Date*

structBIM Project No.	21-0244
Checked By	KK
Drawn By	KK
Scale	1/4" = 1'-0"

Sheet Title

FOUNDATION PLAN

Sheet No.

S0

COPYRIGHT, 2016 structBIMEngineers, LLC.
PLOTTED ON: 4/15/2022 3:01:40 PM

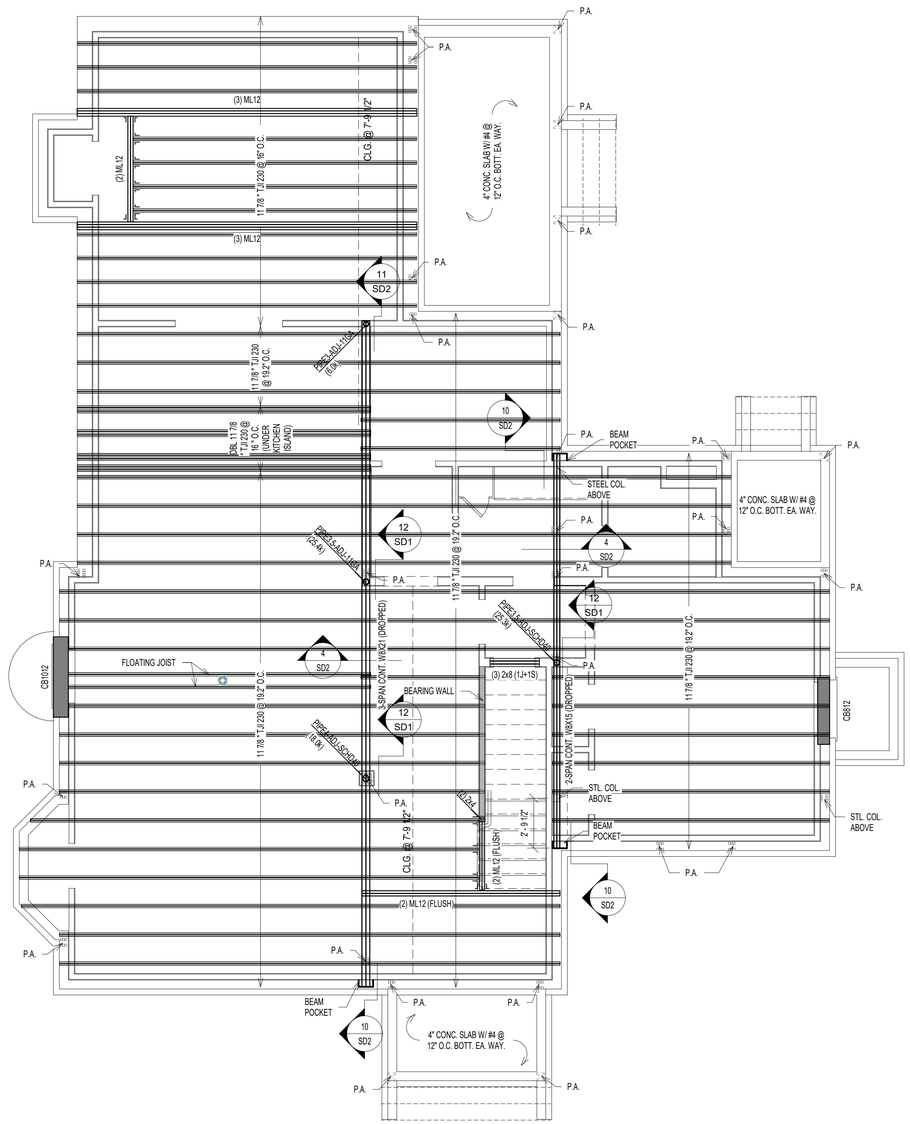

1 / S1 FIRST FLOOR FRAMING PLAN
SCALE: 1/4" = 1'-0"

NOTES:

1. FLOOR JOISTS SHALL BE SPACED @ 16" O.C. UNLESS NOTED OTHERWISE.
2. (J) INDICATED JACK STUDS & (S) INDICATES KING STUDS. EXAMPLE: 1J+1S = ONE JACK STUD & ONE KING STUD AT EACH END OF SPECIFIED HEADER.
3. FLOOR SHEATHING SHALL BE 3/4" APA RATED 3/4" T&G PLYWOOD WITH SPAN RATING OF 48/24 OR STURD-I-FLOOR WITH 24" O.C. GRADE.
4. WALL SHEATHING SHALL BE 7/16" APA RATED OSB/PLYWOOD CONTINUOUS SHEATHING W/ 8d NAILS @ 6" O.C.ON EDGES AND 12" O.C. IN-FIELD.
5. INSTALL BRIDGING BETWEEN JOISTS AT MID-SPAN OR AS REQUIRED PER MANUFACTURER BRIDGING BETWEEN JOISTS UNDER KITCHEN PLATFORMS AND CERAMIC TILE AREAS FOR MIN.THREE JOIST BAYS @ 8'-0" O.C. MAX.
6. FLOOR JOISTS SHALL HAVE 1/2" GYPSUM BOARD CEILING ATTACHED DIRECTLY TO UNDERSIDE OF BOTTOM FLANGE OF JOIST. NOTIFY ENGINEER OF ANY UNFINISHED AREAS.
7. ALL JOISTS ARE DESIGNED PER MIN. PRO RATING (BASED ON iLEVEL WEYERHAEUSER PRO RATING CRITERIA) CRITERIA OF 38. NOTIFY ENGINEER, IF HIGHER PRO RATING IS REQUIRED.
8. INSTALL SQUASH BLOCKS AT EVERY BEARING LOCATION AND PROVIDE SOLID BLOCKING UNDER EVERY BEARING WALL FROM ABOVE AT ALL I JOISTS.
9. PROVIDE JOISTS AT MAX. 16" O.C. SPACING UNDER CERAMIC TILE AREAS. JOIST MANUFACTURER TO DESIGN JOISTS FOR DEFLECTION LIMIT OF L/720 OR 0.3" MAX. COORDINATE LOCATION OF CERAMIC TILE AREAS WITH ARCHITECTURAL DRAWINGS.
10. PROVIDE DOUBLE JOISTS UNDER KITCHEN ISLANDS, OVERSIZED BATH TUBS.
11. WEB STIFFENERS ARE REQUIRED WHEN INTERMEDIATE BEARING LENGTH IS LESS THAN 5 1/4" AND SPAN ON EITHER SIDE OF BEARING IS LARGER THAN REQUIRED PER JOIST MANUFACTURER.
12. PROTECT ALL UNTREATED WOOD FROM DIRECT CONTACT WITH CONCRETE OR MASONRY.
13. PROVIDE SQUASH BLOCKS ON BOTH SIDES AT BEARING WALL LOCATIONS WITH ONE 10d NAILS AT EACH FLANGE.
14. PROVIDE BLOCKING PANELS PER MANUFACTURER'S SPECIFICATIONS, IF JOISTS ARE SUPPORTING SHEAR WALL FROM ABOVE.
15. PROVIDE SOLID BLOCKING BETWEEN JOISTS WHEN SUPPORTING BEARING WALL FROM ABOVE.
16. PROVIDE BACKER/FILLER BLOCKS AS RECOMMENDED BY JOIST MANUFACTURER AT CONNECTION LOCATIONS OR MULTIPLE JOISTS SUPPORTING POSTS FROM ABOVE.
17. DO NOT CUT HOLES OR NOTCHES WITHOUT PRIOR APPROVAL FROM ENGINEER OR JOIST MANUFACTURER.
18. PROVIDE SOLID BLOCKING OF SAME SIZE WITHIN FLOOR SYSTEM UNDER ALL JACK STUDS, KING STUDS & POSTS FROM ABOVE.
19. PROVIDE MIN. (2) 2x12 UP TO 4'-0" SPAN, (2) ML10 FOR 4'-0" TO 6'-0" SPAN, (2) ML12 6'-0" TO 9'-0" SPAN WHERE BEAM SIZES ARE NOT SPECIFIED ON PLANS. ANY SPANS LARGER THAN 9'-0" SUPPORITNG FRAMING AND NOT SPECIFIED ON PLANS SHALL BE NOTIFIED TO ENGINEER IMMEDIATELY.
20. PROVIDE MIN. DOUBLE JOISTS OR SPECIAL FLOOR TRUSS UNDER (2) 2x POSTS AND (2) PLY MICROLAM LVL OR SPECIAL FLOOR TRUSS TO MATCH FLOOR THICKNESS UNDER (3) 2x POSTS UNLESS NOTED OTHERWISE ON THE PLAN. CONTRACTOR SHALL NOTIFY ENGINEER FOR SUPPORTING STRUCTURAL MEMBER FOR ALL OTHER POST SIZES COMING FROM ABOVE.
21. PROVIDE MIN. (3) 2x POST UNDER BEAMS UNLESS NOTED OTHERWISE.
22. ALL POSTS SHALL CONTINUE DOWN TO FOUNDATION OR STRUCTURAL MEMBER SUCH AS BEAM/GIRDER TRUSS BELOW.
23. PROVIDE MIN. 3 JACK STUDS + 2 KING STUDS AT ALL HEADERS UNLESS NOTED OTHERWISE.
24. ALL WALL STUDS SHALL SPF#2 AND SHALL BE SPACED AT MAX. 16" O.C. UNLESS NOTED OTHERWISE.
25. ALL TWO STORY HIGH WALLS SHALL BE (2) 2x6 SPF#2 BALLOON FRAMED UNLESS NOTED OTHERWISE.
26. PROVIDE FULL HEIGHT BLOCKING BETWEEN JOISTS UP TO THREE JOIST BAYS WHERE JOISTS ARE PARALLEL TO FOUNDATION WALL.

PLAN LEGENDS & SYMBOLS:

- INDICATES BEARING WALL
- INDICATES DRAIN HOLE FROM ABOVE
- INDICATES JOIST/TRUSS HANEGR (REFER TO SHOP DWGS)
- INDICATES FRAMING DIRECTION
- INDICATES REBAR DIRECTION
- (_J+_S) — INDICATES NO. OF KING STUDS AT EACH END; INDICATES NO. OF JACK STUDS AT EACH END
- WF?? — INDICATES WALL FOOTING; WIDTH OF WALL FOOTING IN INCHES
- TS?? — INDICATES THICKENED SLAB; WIDTH OF THICKENED SLAB IN INCHES
- Fx.x — INDICATES ISOLATED COLUMN FOOTING; INDICATES SIZE OF FOOTING IN DECIMAL FEET
- ML?? — MICROLAM LVL 2.0E; DEPTH OF MICROLAM LVL IN INCHES
- LSL?? — LAMINATED STRAND LUMBER 1.7E; DEPTH OF TIMBERSTAND LSL BEAM IN INCHES
- PSL?? — PARALLAM STRAND LUMBER 2.0E; WIDTHxDEPTH OF MEMBER
- CC — COLUMN CAP
- CB — COLUMN BASE
- HD — HOLD DOWN ANCHOR
- MS — METAL STRAP
- H — JOIST/TRUSS/BEAM HANGER
- HC — HURRICANE CLIPS

MICROLAM LVL BEAM SCHEDULE

MARK	DESCRIPTION
(2) ML12	(2) 1 3/4" x 11 7/8" LVL - 1.9E
(3) ML10	(3) 1 3/4" x 9 1/2" LVL - 1.9E
(3) ML12	(3) 1 3/4" x 11 7/8" LVL - 1.9E
(4) ML12	(4) 1 3/4" x 11 7/8" LVL - 1.9E

STEEL COLUMN SCHEDULE

MARK	DESCRIPTION
PIPE3-ADJ-11GA	3"Ø x 11 GA. ADJUSTABLE STEEL PIPE COLUMN
PIPE3.5-ADJ-11GA	3.5Ø x 11GA. ADJUSTABLE STEEL PIPE COLUMN
PIPE3.5-ADJ-SCHD40	3 1/2"Ø (O.D.) SCHEDULE 40 ADJUSTABLE STEEL PIPE COLUMN
PIPE4-ADJ-SCHD40	4"Ø (O.D.) SCHEDULE 40 ADJUSTABLE STEEL PIPE COLUMN

REVIEWED
By Michael Kyne at 2:05 pm, May 23, 2022

APPROVED
Montgomery County
Historic Preservation Commission

© COPYRIGHT 2016
Structural Engineering content of this drawings are property of structBIM LLC and are issued for this project only. Any re-use or re-production of these drawings shall not be done without written consent of structBIM LLC. These drawings are to be read in conjuction with project specifications and drawings from other consultants. These drawings shall not be used as shop drawings. Do not scale drawings, use dimensions as specified.

GTM ARCHITECTS
7735 OLD GEORGETOWN ROAD
SUITE 700
BETHESDA, MD 20814
(240)333-2000
(240)333-2001 FAX
WWW.GTMARCHITECTS.COM
GTM

Seal

STATE OF MARYLAND — ANISHAL KANKARIA — 40082 — PROFESSIONAL ENGINEER

Consultant

structBIM ENGINEERS
WE DESIGN....WE BIM
46400 BENEDICT DR, SUITE #211
PHONE: 703-657-4481
E-MAIL: info@structBIM.com

Project

23 HIGH STREET, LOT 2,
BROOKVILLE, MD

I certify that these documents were prepared or approved by me, and that I am a duly licensed Professional Engineer under the laws of the State of Maryland, license number 40082, Expiration Date: 02-13-2023.

Issue Description	*Date*

structBIM Project No.	21-0244
Checked By	KK
Drawn By	KK
Scale	1/4" = 1'-0"

Sheet Title
FIRST FLOOR FRAMING PLAN

Sheet No.

S1

COPYRIGHT, 2016 structBIMEngineers, LLC.
PLOTTED ON: 4/15/2022 3:01:43 PM

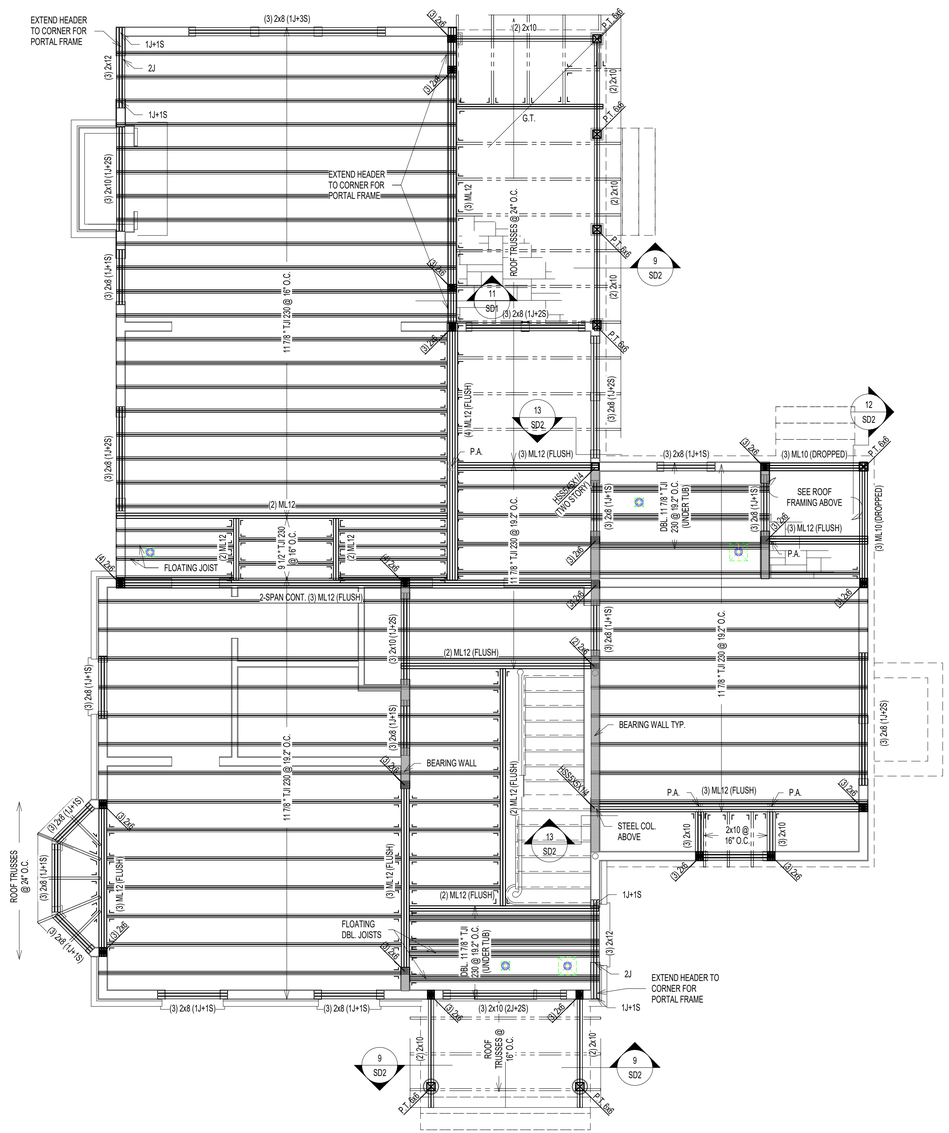

1 S2 SECOND FLOOR FRAMING PLAN
SCALE: 1/4" = 1'-0"

NOTES:

1. FLOOR JOISTS SHALL BE SPACED @ 16" O.C. UNLESS NOTED OTHERWISE.
2. (J) INDICATED JACK STUDS & (S) INDICATES KING STUDS. EXAMPLE: 1J+1S = ONE JACK STUD & ONE KING STUD AT EACH END OF SPECIFIED HEADER.
3. FLOOR SHEATHING SHALL BE 3/4" APA RATED 3/4" T&G PLYWOOD WITH SPAN RATING OF 48/24 OR STURD-I-FLOOR WITH 24" O.C. GRADE.
4. WALL SHEATHING SHALL BE 7/16" APA RATED OSB/PLYWOOD CONTINUOUS SHEATHING W/ 8d NAILS @ 6" O.C.ON EDGES AND 12" O.C. IN-FIELD.
5. INSTALL BRIDGING BETWEEN JOISTS AT MID-SPAN OR AS REQUIRED PER MANUFACTURER BRIDGING BETWEEN JOISTS UNDER KITCHEN PLATFORMS AND CERAMIC TILE AREAS FOR MIN.THREE JOIST BAYS @ 8'-0" O.C. MAX.
6. FLOOR JOISTS SHALL HAVE 1/2" GYPSUM BOARD CEILING ATTACHED DIRECTLY TO UNDERSIDE OF BOTTOM FLANGE OF JOIST. NOTIFY ENGINEER OF ANY UNFINISHED AREAS.
7. ALL JOISTS ARE DESIGNED PER MIN. PRO RATING (BASED ON iLEVEL WEYERHAEUSER PRO RATING CRITERIA) CRITERIA OF 38. NOTIFY ENGINEER, IF HIGHER PRO RATING IS REQUIRED.
8. INSTALL SQUASH BLOCKS AT EVERY BEARING LOCATION AND PROVIDE SOLID BLOCKING UNDER EVERY BEARING WALL FROM ABOVE AT ALL I JOISTS.
9. PROVIDE JOISTS AT MAX. 16" O.C. SPACING UNDER CERAMIC TILE AREAS. JOIST MANUFACTURER TO DESIGN JOISTS FOR DEFLECTION LIMIT OF L/720 OR 0.3" MAX. COORDINATE LOCATION OF CERAMIC TILE AREAS WITH ARCHITECTURAL DRAWINGS.
10. PROVIDE DOUBLE JOISTS UNDER KITCHEN ISLANDS, OVERSIZED BATH TUBS.
11. WEB STIFFENERS ARE REQUIRED WHEN INTERMEDIATE BEARING LENGTH IS LESS THAN 5 1/4" AND SPAN ON EITHER SIDE OF BEARING IS LARGER THAN REQUIRED PER JOIST MANUFACTURER.
12. PROTECT ALL UNTREATED WOOD FROM DIRECT CONTACT WITH CONCRETE OR MASONRY.
13. PROVIDE SQUASH BLOCKS ON BOTH SIDES AT BEARING WALL LOCATIONS WITH ONE 10d NAILS AT EACH FLANGE.
14. PROVIDE BLOCKING PANELS PER MANUFACTURER'S SPECIFICATIONS, IF JOISTS ARE SUPPORTING SHEAR WALL FROM ABOVE.
15. PROVIDE SOLID BLOCKING BETWEEN JOISTS WHEN SUPPORTING BEARING WALL FROM ABOVE.
16. PROVIDE BACKER/FILLER BLOCKS AS RECOMMENDED BY JOIST MANUFACTURER AT CONNECTION LOCATIONS OR MULTIPLE JOISTS SUPPORTING POSTS FROM ABOVE.
17. DO NOT CUT HOLES OR NOTCHES WITHOUT PRIOR APPROVAL FROM ENGINEER OR JOIST MANUFACTURER.
18. PROVIDE SOLID BLOCKING OF SAME SIZE WITHIN FLOOR SYSTEM UNDER ALL JACK STUDS, KING STUDS & POSTS FROM ABOVE.
19. PROVIDE MIN. (2) 2x12 UP TO 4'-0" SPAN, (2) ML10 FOR 4'-0" TO 6'-0" SPAN, (2) ML12 6'-0" TO 9'-0" SPAN WHERE BEAM SIZES ARE NOT SPECIFIED ON PLANS. ANY SPANS LARGER THAN 9'-0" SUPPORTING FRAMING AND NOT SPECIFIED ON PLANS SHALL BE NOTIFIED TO ENGINEER IMMEDIATELY.
20. PROVIDE MIN. DOUBLE JOISTS OR SPECIAL FLOOR TRUSS UNDER (2) 2x POSTS AND (2) PLY MICROLAM LVL OR SPECIAL FLOOR TRUSS TO MATCH FLOOR THICKNESS UNDER (3) 2x POSTS UNLESS NOTED OTHERWISE ON THE PLAN. CONTRACTOR SHALL NOTIFY ENGINEER FOR SUPPORTING STRUCTURAL MEMBER FOR ALL OTHER POST SIZES COMING FROM ABOVE.
21. PROVIDE MIN. (3) 2x POST UNDER BEAMS UNLESS NOTED OTHERWISE.
22. ALL POSTS SHALL CONTINUE DOWN TO FOUNDATION OR STRUCTURAL MEMBER SUCH AS BEAM/GIRDER TRUSS BELOW.
23. PROVIDE MIN. 3 JACK STUDS + 2 KING STUDS AT ALL HEADERS UNLESS NOTED OTHERWISE.
24. ALL WALL STUDS SHALL SPF#2 AND SHALL BE SPACED AT MAX. 16" O.C. UNLESS NOTED OTHERWISE.
25. ALL TWO STORY HIGH WALLS SHALL BE (2) 2x6 SPF#2 BALLOON FRAMED UNLESS NOTED OTHERWISE.
26. PROVIDE FULL HEIGHT BLOCKING BETWEEN JOISTS UP TO THREE JOIST BAYS WHERE JOISTS ARE PARALLEL TO FOUNDATION WALL.

PLAN LEGENDS & SYMBOLS:

- INDICATES BEARING WALL
- INDICATES DRAIN HOLE FROM ABOVE
- INDICATES JOIST/TRUSS HANEGR (REFER TO SHOP DWGS)
- INDICATES FRAMING DIRECTION
- INDICATES REBAR DIRECTION
- (_J+_S) — INDICATES NO. OF KING STUDS AT EACH END; INDICATES NO. OF JACK STUDS AT EACH END
- WF?? — INDICATES WALL FOOTING; WIDTH OF WALL FOOTING IN INCHES
- TS?? — INDICATES THICKENED SLAB; WIDTH OF THICKENED SLAB IN INCHES
- Fx.x — INDICATES ISOLATED COLUMN FOOTING; INDICATES SIZE OF FOOTING IN DECIMAL FEET
- ML?? — MICROLAM LVL 2.0E; DEPTH OF MICROLAM LVL IN INCHES
- LSL?? — LAMINATED STRAND LUMBER 1.7E; DEPTH OF TIMBERSTAND LSL BEAM IN INCHES
- PSL?? — PARALLAM STRAND LUMBER 2.0E; WIDTHxDEPTH OF MEMBER
- CC — COLUMN CAP
- CB — COLUMN BASE
- HD — HOLD DOWN ANCHOR
- MS — METAL STRAP
- H — JOIST/TRUSS/BEAM HANGER
- HC — HURRICANE CLIPS

MICROLAM LVL BEAM SCHEDULE

MARK	DESCRIPTION
(2) ML12	(2) 1 3/4" x 11 7/8" LVL - 1.9E
(3) ML10	(3) 1 3/4" x 9 1/2" LVL - 1.9E
(3) ML12	(3) 1 3/4" x 11 7/8" LVL - 1.9E
(4) ML12	(4) 1 3/4" x 11 7/8" LVL - 1.9E

STEEL COLUMN SCHEDULE

MARK	DESCRIPTION
PIPE3-ADJ-11GA	3"Ø x 11 GA. ADJUSTABLE STEEL PIPE COLUMN
PIPE3.5-ADJ-11GA	3.5Ø x 11GA. ADJUSTABLE STEEL PIPE COLUMN
PIPE3.5-ADJ-SCHD40	3 1/2"Ø (O.D.) SCHEDULE 40 ADJUSTABLE STEEL PIPE COLUMN
PIPE4-ADJ-SCHD40	4"Ø (O.D.) SCHEDULE 40 ADJUSTABLE STEEL PIPE COLUMN

REVIEWED
By Michael Kyne at 2:05 pm, May 23, 2022

APPROVED
Montgomery County
Historic Preservation Commission

© COPYRIGHT 2016
Structural Engineering content of this drawings are property of structBIM LLC and are issued for this project only. Any re-use or re-production of these drawings shall not be done without written consent of structBIM LLC. These drawings are to be read in conjuction with project specifications and drawings from other consultants. These drawings shall not be used as shop drawings. Do not scale drawings, use dimensions as specified.

GTM ARCHITECTS
7735 OLD GEORGETOWN ROAD
SUITE 700
BETHESDA, MD 20814
(240)333-2000
(240)333-2001 FAX
WWW.GTMARCHITECTS.COM
GTM

Seal

STATE OF MARYLAND — KAMAL KHANNA — 40082 — PROFESSIONAL ENGINEER

Consultant

structBIM ENGINEERS
WE DESIGN....WE BIM
46400 BENEDICT DR, SUITE #211
PHONE: 703-657-4481
E-MAIL: info@structBIM.com

Project

23 HIGH STREET, LOT 2,
BROOKVILLE, MD

I certify that these documents were prepared or approved by me, and that I am a duly licensed Professional Engineer under the laws of the State of Maryland, license number 40082, Expiration Date: 02-13-2023.

Issue Description	*Date*

structBIM Project No.	21-0244
Checked By	KK
Drawn By	KK
Scale	1/4" = 1'-0"

Sheet Title
SECOND FLOOR FRAMING PLAN

Sheet No.

S2

COPYRIGHT, 2016 structBIMEngineers, LLC.
PLOTTED ON: 4/15/2022 3:01:46 PM

FILE NAME:

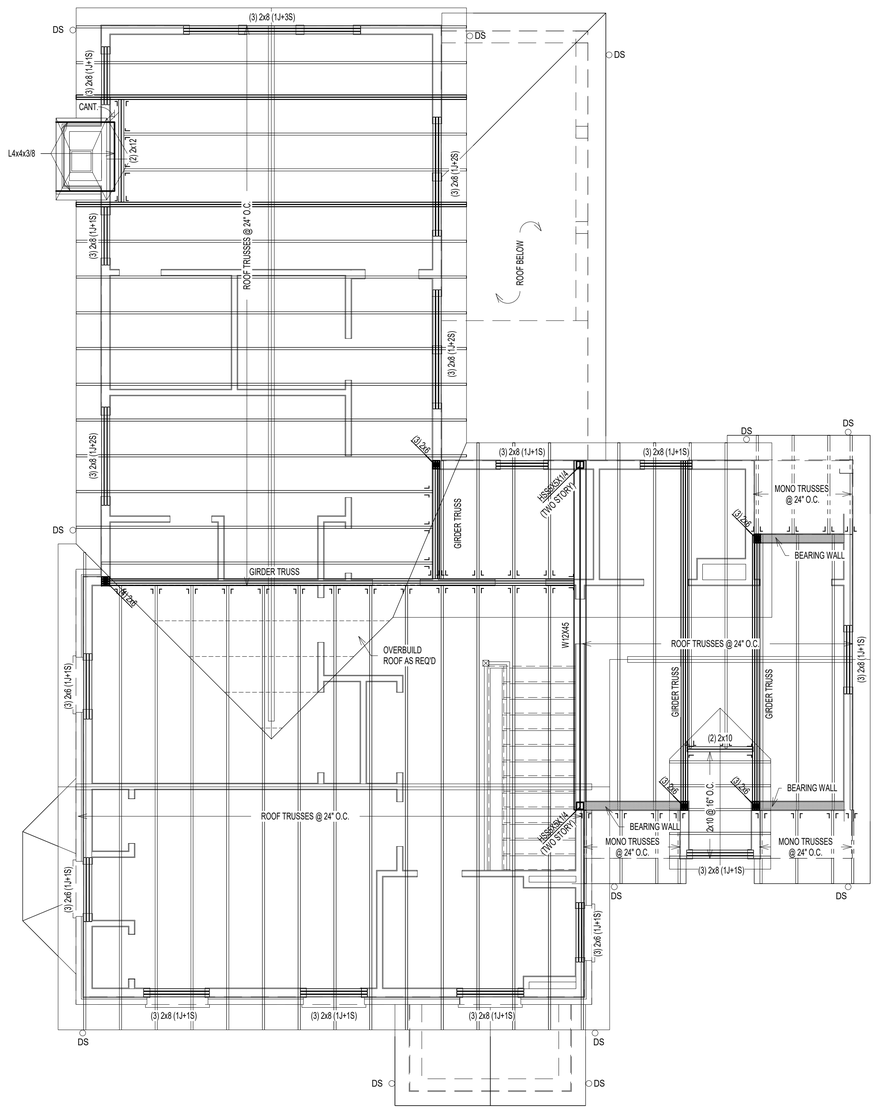

1 / S3 ROOF FRAMING PLAN
SCALE: 1/4" = 1'-0"

NOTES:

1. ALL TRUSSES SHALL BE PRE-FABRICATED ENGINEERED ROOF TRUSSES AND SHALL BE INSTALLED PER TRUSS MANUFACTURER'S LAYOUT AND DESIGN. SUBMIT SIGNED AND SEALED SHOP DRAWINGS FOR REVIEW.
2. ALL ROOF SHEATHING SHALL BE APA RATED 7/16" C-C, C-D OR STRUCTURAL II WITH SPAN RATING OF 48/24 PER "AMERICAN PLYWOOD ASSOCIATION". PROVIDE MIN. NAILING PATTERN W/ 8d COMMON NAILS @ 6" O.C. ON EDGES AND 12" O.C. IN FIELD. PROVIDE PLYWOOD CLIPS AT PLYWOOD EDGES BETWEEN EACH FRAMING MEMBER.
3. TRUSS LAYOUT SHOWN ON THESE DRAWINGS ARE FOR SCHEMATIC PURPOSES ONLY AND TO REFLECT DESIGN INTENT FOR OTHER FRAMING MEMBERS. THESE DRAWINGS SHALL NOT BE CONSIDERED AS SHOP DRAWINGS. TRUSS DESIGN DRAWINGS PREPARED BY TRUSS MANUFACTURER SHALL BE USED FOR TRUSS LAYOUT AND COORDINATION. NOTIFY ENGINEER IF VARIATION IS MADE IN TRUSS DESIGN DRAWINGS THAT AFFECTS ORIGINAL DESIGN INTENT.
4. COORDINATE ROOF SLOPES, VALLEYS, HEEL HEIGHTS WITH ARCHITECTURAL DRAWINGS.
5. INSTALL MINIMUM H2.5A HURRICANE CLIPS AT EACH TRUSS BEARING UNLESS SPECIFIED ON SHOP DRAWINGS.
6. AT ALL NON LOAD BEARING WALLS MAINTAIN 1/4" GAP BETWEEN BOTTOM OF TRUSS BOTTOM CHORD AND TOP OF TOP PLATE. INSTALL SIMPSON "STC" TRUSS CLIPS TO MAINTAIN GAP TO ALLOW TRUSS MOVEMENT.
7. ALL SECTIONS/DETAIL CUTS MARKED AS TYP. SHALL BE APPLIED AT ALL SIMILAR CONDITIONS ON ENTIRE PLAN.
8. TRUSS MANUFACTURER TO DESIGN NECESSARY TEMPORARY/PERMENANT BRACING AND SHALL SPECIFY ON SHOP DRAWINGS.
9. TRUSS MANUFACTURER TO SPECIFY NECESSARY CONNECTORS AND FASTENERS FOR ALL CONNECTIONS INCLUDING BUT NOT LIMITED TO UPLIFT CONNECTORS, HANGERS.
10. PROVIDE SOLID BLOCKING OF SAME SIZE WITHIN FLOOR SYSTEM UNDER ALL JACK STUDS, KING STUDS & POSTS FROM ABOVE.
11. PROVIDE MIN. (3) 2x POST UNDER ALL GIRDER TRUSSES UNLESS NOTED OTHERWISE.
12. PROVIDE MIN. TWO JACK STUDS + TWO KING STUDS AT ALL HEADERS UNLESS NOTED OTHERWISE.
13. ALL WALL STUDS SHALL BE SPF#2 OR EQ. APPROVED AND SPACED AT MAX. 16" O.C. UNLESS NOTED OTHERWISE.

PLAN LEGENDS & SYMBOLS:

- INDICATES BEARING WALL
- INDICATES DRAIN HOLE FROM ABOVE
- INDICATES JOIST/TRUSS HANEGR (REFER TO SHOP DWGS)
- INDICATES FRAMING DIRECTION
- INDICATES REBAR DIRECTION
- (_J+_S) — INDICATES NO. OF KING STUDS AT EACH END; INDICATES NO. OF JACK STUDS AT EACH END
- WF?? — INDICATES WALL FOOTING; WIDTH OF WALL FOOTING IN INCHES
- TS?? — INDICATES THICKENED SLAB; WIDTH OF THICKENED SLAB IN INCHES
- F.x.x — INDICATES ISOLATED COLUMN FOOTING; INDICATES SIZE OF FOOTING IN DECIMAL FEET
- ML?? — MICROLAM LVL 2.0E; DEPTH OF MICROLAM LVL IN INCHES
- LSL?? — LAMINATED STRAND LUMBER 1.7E; DEPTH OF TIMBERSTAND LSL BEAM IN INCHES
- PSL?? — PARALLAM STRAND LUMBER 2.0E; WIDTHxDEPTH OF MEMBER
- CC — COLUMN CAP
- CB — COLUMN BASE
- HD — HOLD DOWN ANCHOR
- MS — METAL STRAP
- H — JOIST/TRUSS/BEAM HANGER
- HC — HURRICANE CLIPS

MICROLAM LVL BEAM SCHEDULE

MARK	DESCRIPTION
(2) ML12	(2) 1 3/4" x 11 7/8" LVL - 1.9E
(3) ML10	(3) 1 3/4" x 9 1/2" LVL - 1.9E
(3) ML12	(3) 1 3/4" x 11 7/8" LVL - 1.9E
(4) ML12	(4) 1 3/4" x 11 7/8" LVL - 1.9E

STEEL COLUMN SCHEDULE

MARK	DESCRIPTION
PIPE3-ADJ-11GA	3"Ø x 11 GA. ADJUSTABLE STEEL PIPE COLUMN
PIPE3.5-ADJ-11GA	3.5Ø x 11GA. ADJUSTABLE STEEL PIPE COLUMN
PIPE3.5-ADJ-SCHD40	3 1/2"Ø (O.D.) SCHEDULE 40 ADJUSTABLE STEEL PIPE COLUMN
PIPE4-ADJ-SCHD40	4"Ø (O.D.) SCHEDULE 40 ADJUSTABLE STEEL PIPE COLUMN

REVIEWED
By Michael Kyne at 2:05 pm, May 23, 2022

APPROVED
Montgomery County
Historic Preservation Commission

© COPYRIGHT 2016
Structural Engineering content of this drawings are property of structBIM LLC and are issued for this project only. Any re-use or re-production of these drawings shall not be done without written consent of structBIM LLC. These drawings are to be read in conjuction with project specifications and drawings from other consultants. These drawings shall not be used as shop drawings. Do not scale drawings, use dimensions as specified.

GTM ARCHITECTS
7735 OLD GEORGETOWN ROAD
SUITE 700
BETHESDA, MD 20814
(240)333-2000
(240)333-2001 FAX
WWW.GTMARCHITECTS.COM

Seal

Consultant

structBIM ENGINEERS
WE DESIGN....WE BIM
46400 BENEDICT DR, SUITE #211
PHONE: 703-657-4481
E-MAIL: info@structBIM.com

Project

23 HIGH STREET, LOT 2,
BROOKVILLE, MD

I certify that these documents were prepared or approved by me, and that I am a duly licensed Professional Engineer under the laws of the State of Maryland, license number 40082, Expiration Date: 02-13-2023.

Issue Description	*Date*

structBIM Project No.	21-0244
Checked By	KK
Drawn By	KK
Scale	1/4" = 1'-0"

Sheet Title

ROOF FRAMING PLAN

Sheet No.

S3

COPYRIGHT, 2016 structBIMEngineers, LLC.
PLOTTED ON: 4/15/2022 3:01:49 PM

FILE NAME:

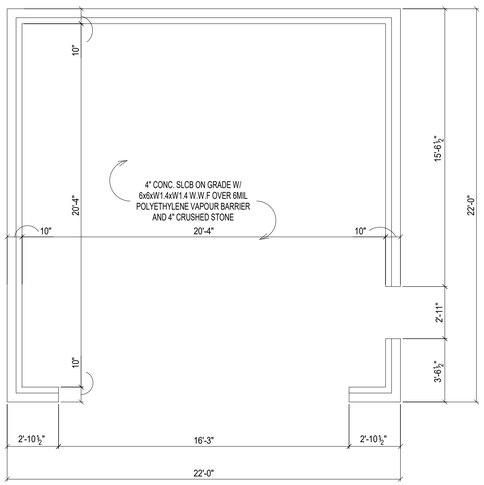

3 / S4 FIRST FLOOR GARAGE FRAMING PLAN
SCALE: 1/4" = 1'-0"

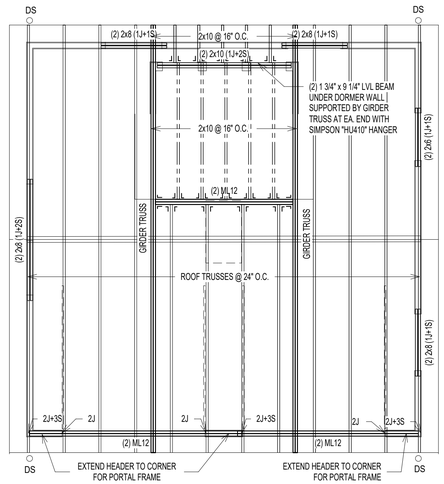

1 / S4 ROOF GARAGE FRANING PLAN
SCALE: 1/4" = 1'-0"

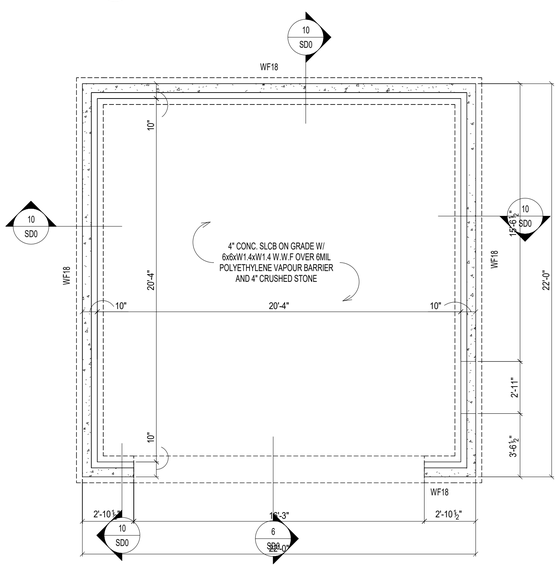

4 / S4 FOUNDATION PLAN
SCALE: 1/4" = 1'-0"

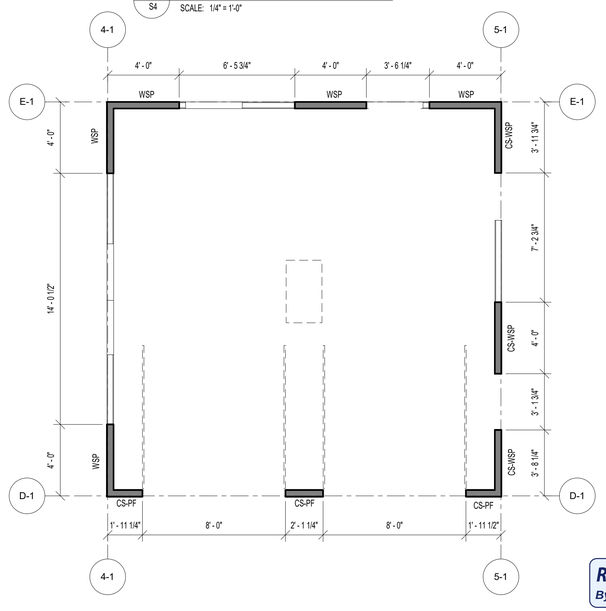

2 / S4 FIRST FLOOR GARAG WALL BRACING PLAN
SCALE: 1/4" = 1'-0"

REVIEWED
By Michael Kyne at 2:05 pm, May 23, 2022

APPROVED
Montgomery County
Historic Preservation Commission

NOTES:

1. ALL TRUSSES SHALL BE PRE-FABRICATED ENGINEERED ROOF TRUSSES AND SHALL BE INSTALLED PER TRUSS MANUFACTURERS LAYOUT AND DESIGN. SUBMIT SIGNED AND SEALED SHOP DRAWINGS FOR REVIEW.
2. ALL ROOF SHEATHING SHALL BE APA RATED 7/16" C-C, C-D OR STRUCTURAL II WITH SPAN RATING OF 48/24 PER "AMERICAN PLYWOOD ASSOCIATION". PROVIDE MIN. NAILING PATTERN W/ 8d COMMON NAILS @ 6" O.C. ON EDGES AND 12" O.C. IN FIELD. PROVIDE PLYWOOD CLIPS AT PLYWOOD EDGES BETWEEN EACH FRAMING MEMBER.
3. TRUSS LAYOUT SHOWN ON THESE DRAWINGS ARE FOR SCHEMATIC PURPOSES ONLY AND TO REFLECT DESIGN INTENT FOR OTHER FRAMING MEMBERS. THESE DRAWINGS SHALL NOT BE CONSIDERED AS SHOP DRAWINGS. TRUSS DESIGN DRAWINGS PREPARED BY TRUSS MANUFACTURER SHALL BE USED FOR TRUSS LAYOUT AND COORDINATION. NOTIFY ENGINEER IF VARIATION IS MADE IN TRUSS DESIGN DRAWINGS THAT AFFECTS ORIGINAL DESIGN INTENT.
4. COORDINATE ROOF SLOPES, VALLEYS, HEEL HEIGHTS WITH ARCHITECTURAL DRAWINGS.
5. INSTALL MINIMUM H2.5A HURRICANE CLIPS AT EACH TRUSS BEARING UNLESS SPECIFIED ON SHOP DRAWINGS.
6. AT ALL NON LOAD BEARING WALLS MAINTAIN 1/4" GAP BETWEEN BOTTOM OF TRUSS BOTTOM CHORD AND TOP OF TOP PLATE. INSTALL SIMPSON "STC" TRUSS CLIPS TO MAINTAIN GAP TO ALLOW TRUSS MOVEMENT.
7. ALL SECTIONS/DETAIL CUTS MARKED AS TYP. SHALL BE APPLIED AT ALL SIMILAR CONDITIONS ON ENTIRE PLAN.
8. TRUSS MANUFACTURER TO DESIGN NECESSARY TEMPORARY/PERMENANT BRACING AND SHALL SPECIFY ON SHOP DRAWINGS.
9. TRUSS MANUFACTURER TO SPECIFY NECESSARY CONNECTORS AND FASTENERS FOR ALL CONNECTIONS INCLUDING BUT NOT LIMITED TO UPLIFT CONNECTORS, HANGERS.
10. PROVIDE SOLID BLOCKING OF SAME SIZE WITHIN FLOOR SYSTEM UNDER ALL JACK STUDS, KING STUDS & POSTS FROM ABOVE.
11. PROVIDE MIN. (3) 2x POST UNDER ALL GIRDER TRUSSES UNLESS NOTED OTHERWISE.
12. PROVIDE MIN. TWO JACK STUDS + TWO KING STUDS AT ALL HEADERS UNLESS NOTED OTHERWISE.
13. ALL WALL STUDS SHALL BE SPF#2 OR EQ. APPROVED AND SPACED AT MAX. 16" O.C. UNLESS NOTED OTHERWISE.

PLAN LEGENDS & SYMBOLS:

- INDICATES BEARING WALL
- INDICATES DRAIN HOLE FROM ABOVE
- INDICATES JOIST/TRUSS HANEGR (REFER TO SHOP DWGS)
- INDICATES FRAMING DIRECTION
- INDICATES REBAR DIRECTION
- (_J+_S) — INDICATES NO. OF KING STUDS AT EACH END; INDICATES NO. OF JACK STUDS AT EACH END
- WF?? — INDICATES WALL FOOTING; WIDTH OF WALL FOOTING IN INCHES
- TS?? — INDICATES THICKENED SLAB; WIDTH OF THICKENED SLAB IN INCHES
- F.x.x — INDICATES ISOLATED COLUMN FOOTING; INDICATES SIZE OF FOOTING IN DECIMAL FEET
- ML?? — MICROLAM LVL 2.0E; DEPTH OF MICROLAM LVL IN INCHES
- LSL?? — LAMINATED STRAND LUMBER 1.7E; DEPTH OF TIMBERSTAND LSL BEAM IN INCHES
- PSL?? — PARALLAM STRAND LUMBER 2.0E; WIDTHxDEPTH OF MEMBER
- CC — COLUMN CAP
- CB — COLUMN BASE
- HD — HOLD DOWN ANCHOR
- MS — METAL STRAP
- H — JOIST/TRUSS/BEAM HANGER
- HC — HURRICANE CLIPS

Ultimate Wind Speed (mph)		115								
BWL Designation		D-1		E-1		4-1		5-1		
No. of Floors above BWL		0		0		0		0		
BWP Method		CS-PF		WSP		WSP		CS-WSP		
Average BWL Spacing (ft)		22		22		22		22		
Tabular Requirement (ft)		3.70		3.90		3.90		3.70		
Adjustments	Exposure	B	1.00	B	1.00	B	1.00	B	1.00	
	Eave-to-Ridge Ht. (ft)	11.00	1.06	11.00	1.06	11.00	1.06	11.00	1.06	
	Max. Wall Ht. (ft)	9.00	0.95	9.00	0.95	9.00	0.95	9.00	0.95	
	No. of BWLs	2	1.00	2	1.00	2	1.00	2	1.00	
	Omit Interior Finish?	No	1.00	No	1.00	No	1.00	No	1.00	
	Added Hold-downs?	No	1.00	No	1.00	No	1.00	No	1.00	
	Joints Blocked?	Yes	1.00	Yes	1.00	Yes	1.00	Yes	1.00	
	Fasteners @ 4" o.c.?	No	1.00	No	1.00	No	1.00	No	1.00	
Required BWP Length (ft)		3.73		3.93		3.93		3.73		
Actual BWPs	BWP	Method	Length	Method	Length	Method	Length	Method	Length	
	Contributing Length (ft)									
	1	CS-PF	2.00	WSP	4.00	WSP	4.00	CS-WSP	3.75	
	2	CS-PF	2.16	WSP	4.00	WSP	4.00	CS-WSP	4.00	
	3	CS-PF	2.00	WSP	4.00			CS-WSP	4.00	
	4									
	5									
	6									
	7									
Actual BWP Length (ft)		6.16		12.00		8.00		11.75		
Actual ≥ Required?		PASS		PASS		PASS		PASS		
BWPs ≤ 20' Apart?		Yes		Yes		Yes		Yes		
≥ 2 Panels in BWL?		Yes		Yes		Yes		Yes		
BWP 10' from Ends?		Yes		Yes		Yes		Yes		
Continuous Sheathing End Conditions		End 1	End 2	End 1	End 2	End 1	End 2	End 1	End 2	
		1	1	1	1	1	1	1	1	
BWL Compliance		PASS		PASS		PASS		PASS		

© COPYRIGHT 2016
Structural Engineering content of this drawings are property of structBIM LLC and are issued for this project only. Any re-use or re-production of these drawings shall not be done without written consent of structBIM LLC. These drawings are to be read in conjuction with project specifications and drawings from other consultants. These drawings shall not be used as shop drawings. Do not scale drawings, use dimensions as specified.

GTM ARCHITECTS

7735 OLD GEORGETOWN ROAD
SUITE 700
BETHESDA, MD 20814
(240)333-2000
(240)333-2001 FAX
WWW.GTMARCHITECTS.COM

GTM

Seal

STATE OF MARYLAND
KAMAL KANNAN
40082
PROFESSIONAL ENGINEER

Consultant

structBIM ENGINEERS
WE DESIGN....WE BIM
46400 BENEDICT DR, SUITE #211
PHONE: 703-657-4481
E-MAIL: info@structBIM.com

Project

23 HIGH STREET, LOT 2,
BROOKVILLE, MD

I certify that these documents were prepared or approved by me, and that I am a duly licensed Professional Engineer under the laws of the State of Maryland, license number 40082, Expiration Date: 02-13-2023.

Issue Description	*Date*

structBIM Project No.	21-0244
Checked By	KK
Drawn By	KK
Scale	1/4" = 1'-0"

Sheet Title

GARAGE FRAMING PLAN

Sheet No.

S4

COPYRIGHT, 2016 structBIMEngineers, LLC.
PLOTTED ON: 4/15/2022 3:01:51 PM

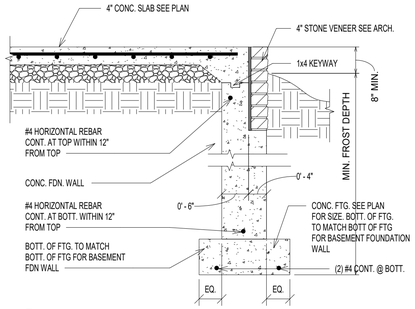

9 SD0 — SD0_12_FNDN_CONC_PORCH1
SCALE: 3/4" = 1'-0"

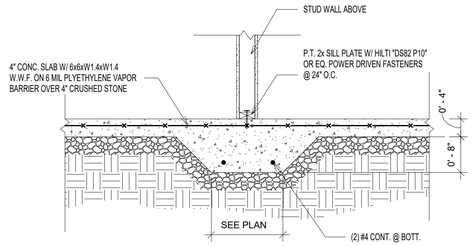

5 SD0 — INT. WALL THICKENED SLAB
SCALE: 3/4" = 1'-0"

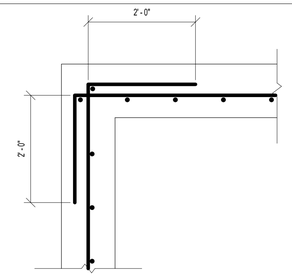

TYP. CORNER REINFORCEMENT DETAIL (PLAN VIEW)

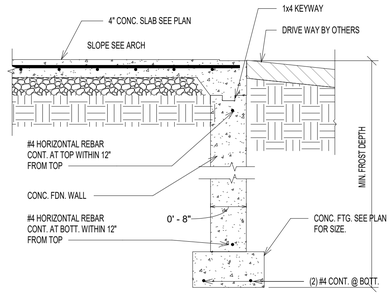

6 SD0 — FOUNDATION WALL @ GARAGE ENTRY
SCALE: 3/4" = 1'-0"

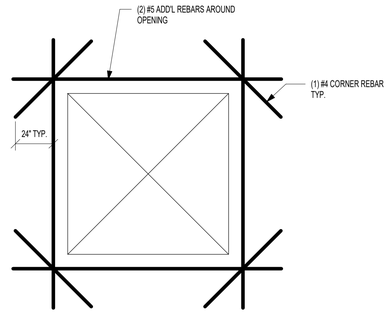

TYP. REINFORCEMENT AROUND OEPNING(ELEVATION VIEW)

1 SD0 — TYP. REINFORCEMENT AT WALL CORNER & OPENING
SCALE: 3/4" = 1'-0"

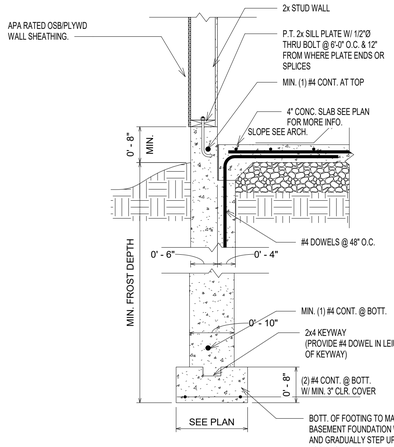

10 SD0 — TYP. FOUNDATION WALL @ GARAGE W/ SIDING
SCALE: 3/4" = 1'-0"

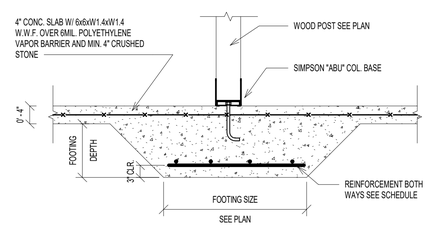

7 SD0 — TYPICAL WOOD COLUMN FOOTING
SCALE: 3/4" = 1'-0"

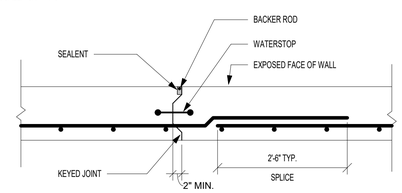

NOTE: PROVIDE CONSTRUCTION OR CONTROL JOINTS IN FOUNDATION WALLS AT EVERY 40'-0" TYPICAL.

2 SD0 — TYP CONTROL JOINT @ FOUNDATION WALL
SCALE: 3/4" = 1'-0"

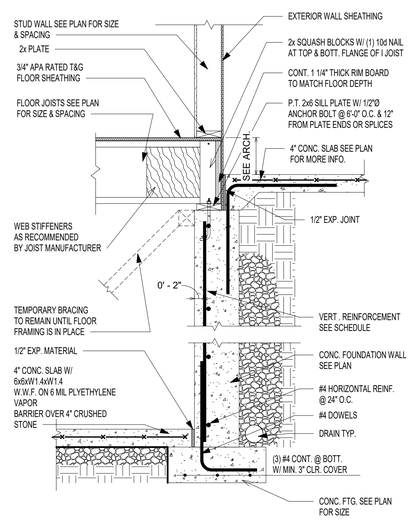

8 SD0 — TYP. FOUNDATION WALL SECTION @ PORCH
SCALE: 3/4" = 1'-0"

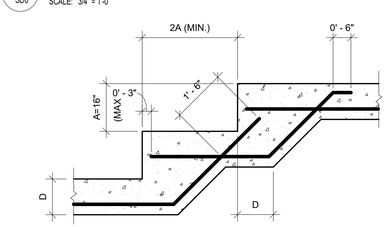

NOTE: SEE PLAN FOR REINFORCING AND OTHER INFO.

3 SD0 — TYP. STEPPED FOOTING DETAIL
SCALE: 1/2" = 1'-0"

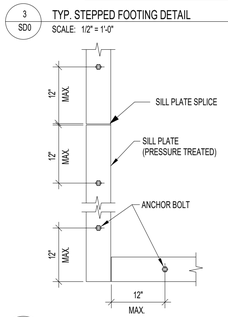

NOTES:

1. MINIMUM SILL BOLTING TO CONCRETE SHALL BE 1/2"Ø ANCHOR BOLTS, OR EQUAL, AT 6'-0" O.C. WITH 7" MINIMUM EMBEDMENT.

2. ALL ANCHORS FOR SILL PLATES SUPPORTING SHEAR WALLS (SW) SHALL HAVE MIN. 3"x3" STEEL WASHERS AND SHALL EXTEND A MINIMUM OF 2" ABOVE TOP OF SILL.

3. PROVIDE MINIMUM (2) BOLTS PER PIECE.

4. SEE OTHER DETAILS FOR USE OF MUDSILL ANCHORS IN LIEU OF ANCHOR BOLTS.

4 SD0 — TYP. SILL PLATE ANCHORAGE
SCALE: 3/4" = 1'-0"

REVIEWED
By Michael Kyne at 2:05 pm, May 23, 2022

APPROVED
Montgomery County
Historic Preservation Commission

© COPYRIGHT 2016
Structural Engineering content of this drawings are property of structBIM LLC and are issued for this project only. Any re-use or re-production of these drawings shall not be done without written consent of structBIM LLC. These drawings are to be read in conjuction with project specifications and drawings from other consultants. These drawings shall not be used as shop drawings. Do not scale drawings, use dimensions as specified.

GTM ARCHITECTS

7735 OLD GEORGETOWN ROAD
SUITE 700
BETHESDA, MD 20814
(240)333-2000
(240)333-2001 FAX
WWW.GTMARCHITECTS.COM

GTM

Seal

STATE OF MARYLAND
KAMAL KANDIL
40082
PROFESSIONAL ENGINEER

Consultant

structBIM ENGINEERS
WE DESIGN....WE BIM
46400 BENEDICT DR, SUITE #211
PHONE: 703-657-4481
E-MAIL: info@structBIM.com

Project

23 HIGH STREET, LOT 2,
BROOKVILLE, MD

I certify that these documents were prepared or approved by me, and that I am a duly licensed Professional Engineer under the laws of the State of Maryland, license number 40082, Expiration Date: 02-13-2023.

Issue Description	*Date*

structBIM Project No.	21-0244
Checked By	KK
Drawn By	KK
Scale	As indicated

Sheet Title

FOUNDATION DETAILS

Sheet No.

SD0

COPYRIGHT, 2016 structBIMEngineers, LLC.
PLOTTED ON: 4/15/2022 3:01:56 PM

FILE NAME:

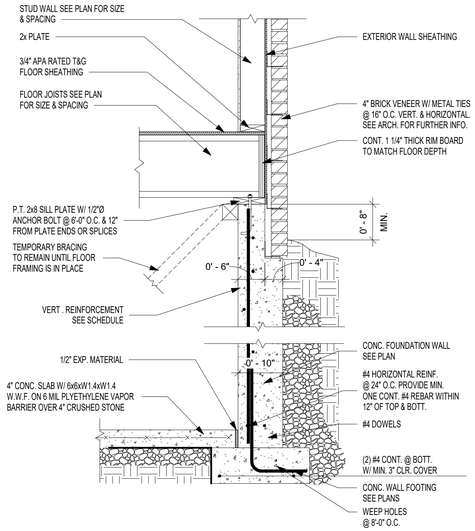

7 SD0.1 FNDN_BSMT_CONC_12_02_I-JOISTS-PARALLEL
SCALE: 3/4" = 1'-0"

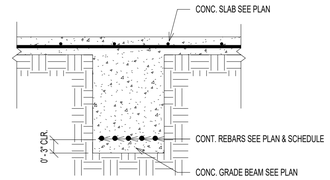

4 SD0.1 TYP. GRADE BEAM DETAIL
SCALE: 3/4" = 1'-0"

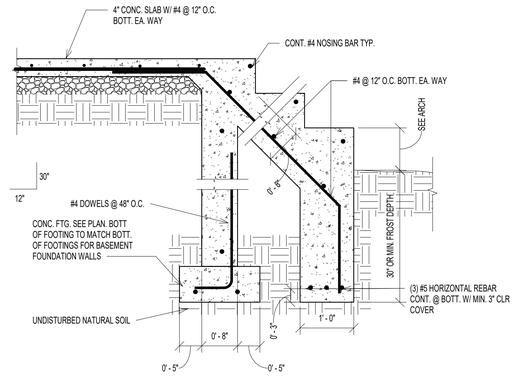

NOTE: VERIFY STEPS AND GRADE WITH ARCHITECTURAL DRAWINGS.

5 SD0.1 STEPS @ PORCH
SCALE: 3/4" = 1'-0"

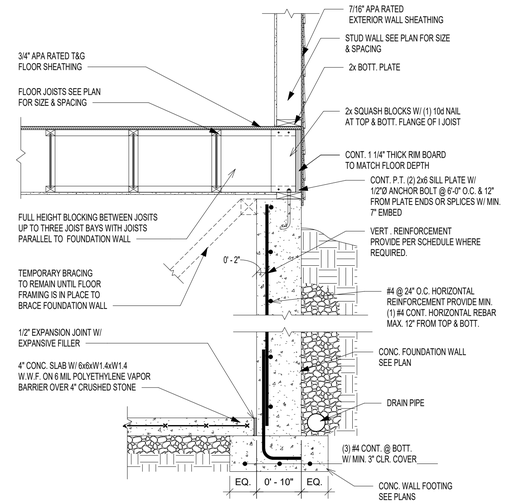

1 SD0.1 TYP. FOUNDATION WALL SECTION
SCALE: 3/4" = 1'-0"

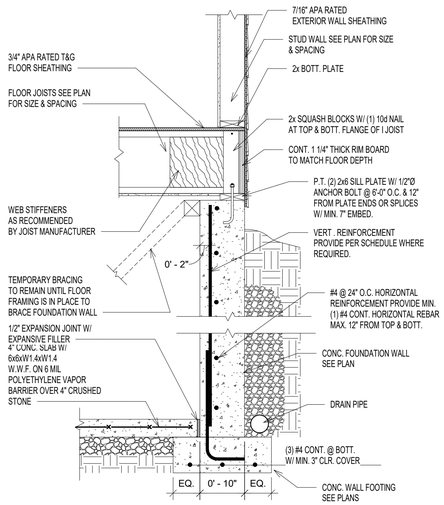

2 SD0.1 TYP. FOUNDATION WALL SECTION
SCALE: 3/4" = 1'-0"

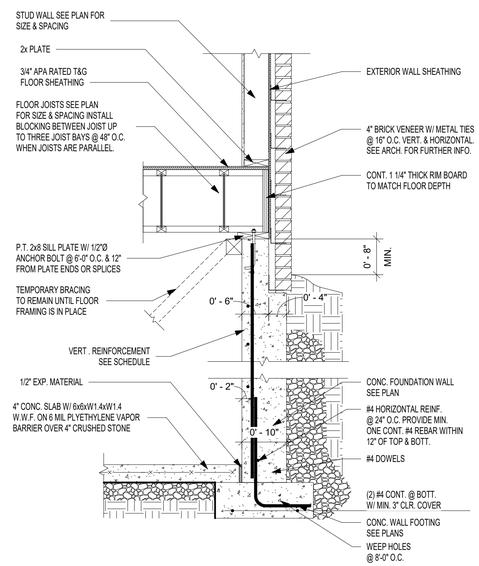

6 SD0.1 FNDN_BSMT_CONC_12_02_I-JOISTS-PERPENDICULAR
SCALE: 3/4" = 1'-0"

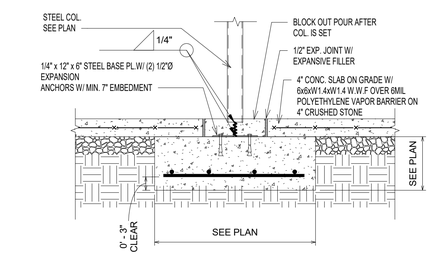

3 SD0.1 ISOLATED COLUMN FOOTING
SCALE: 3/4" = 1'-0"

REVIEWED
By Michael Kyne at 2:05 pm, May 23, 2022

APPROVED
Montgomery County
Historic Preservation Commission

© COPYRIGHT 2016
Structural Engineering content of this drawings are property of structBIM LLC and are issued for this project only. Any re-use or re-production of these drawings shall not be done without written consent of structBIM LLC. These drawings are to be read in conjuction with project specifications and drawings from other consultants. These drawings shall not be used as shop drawings. Do not scale drawings, use dimensions as specified.

GTM ARCHITECTS

7735 OLD GEORGETOWN ROAD
SUITE 700
BETHESDA, MD 20814
(240)333-2000
(240)333-2001 FAX
WWW.GTMARCHITECTS.COM

GTM

Seal

STATE OF MARYLAND
MICHAEL KANE
40082
PROFESSIONAL ENGINEER

Consultant

structBIM ENGINEERS
WE DESIGN....WE BIM
46400 BENEDICT DR, SUITE #211
PHONE: 703-657-4481
E-MAIL: info@structBIM.com

Project

23 HIGH STREET, LOT 2,
BROOKVILLE, MD

I certify that these documents were prepared or approved by me, and that I am a duly licensed Professional Engineer under the laws of the State of Maryland, license number 40082, Expiration Date: 02-13-2023.

Issue Description	*Date*

structBIM Project No.	21-0244
Checked By	KK
Drawn By	KK
Scale	3/4" = 1'-0"

Sheet Title

FOUNDATION DETAILS

Sheet No.

SD0.1

COPYRIGHT, 2016 structBIMEngineers, LLC.

PLOTTED ON: 4/15/2022 3:02:01 PM

FILE NAME:

REVIEWED
By Michael Kyne at 2:05 pm, May 23, 2022

APPROVED
Montgomery County
Historic Preservation Commission

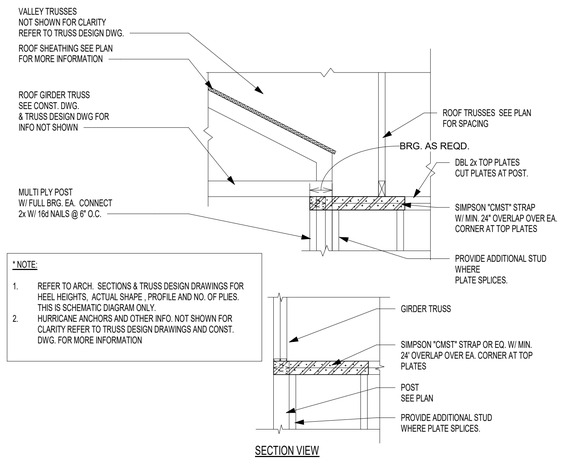

* NOTE:

1. REFER TO ARCH. SECTIONS & TRUSS DESIGN DRAWINGS FOR HEEL HEIGHTS, ACTUAL SHAPE , PROFILE AND NO. OF PLIES. THIS IS SCHEMATIC DIAGRAM ONLY.
2. HURRICANE ANCHORS AND OTHER INFO. NOT SHOWN FOR CLARITY REFER TO TRUSS DESIGN DRAWINGS AND CONST. DWG. FOR MORE INFORMATION

SECTION VIEW

10 / SD1 G.T. W/ FULL BRG ON POST @ CORNER
SCALE: 3/4" = 1'-0"

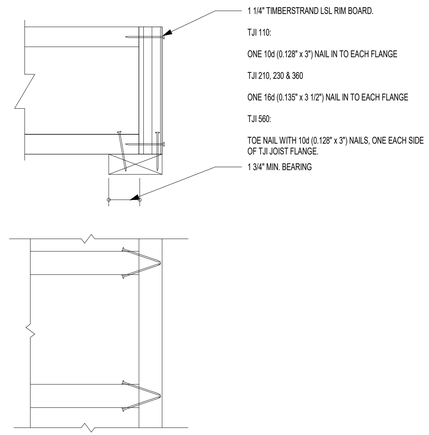

TOP VIEW

7 / SD1 RIM TO TJI JOIST CONNECTION
SCALE: 3/4" = 1'-0"

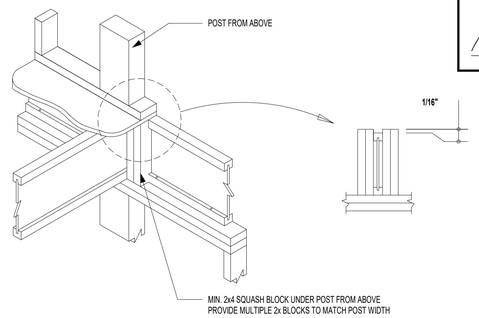

4 / SD1 JOISTS BRG @ EXT. WALL W/ POST ABOVE
SCALE: 3/4" = 1'-0"

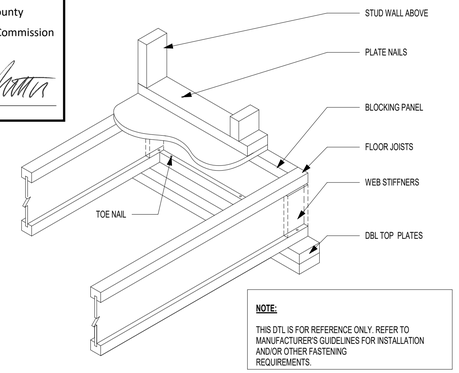

NOTE:

THIS DTL IS FOR REFERENCE ONLY. REFER TO MANUFACTURER'S GUIDELINES FOR INSTALLATION AND/OR OTHER FASTENING REQUIREMENTS.

1 / SD1 I JOIST WITH BRG WALL ABOVE
SCALE: 3/4" = 1'-0"

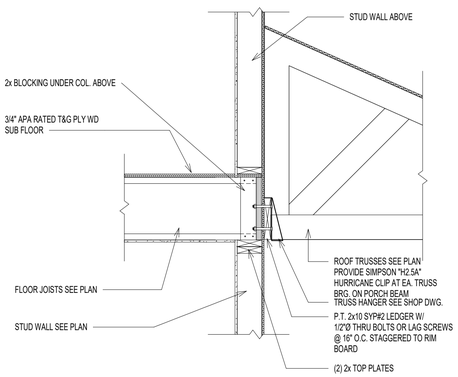

11 / SD1 SECTION @ PORCH
SCALE: 3/4" = 1'-0"

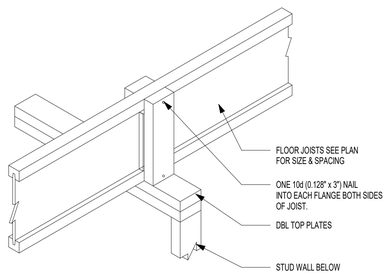

8 / SD1 TYP. SQUASH BLOCKS DETAIL
SCALE: 3/4" = 1'-0"

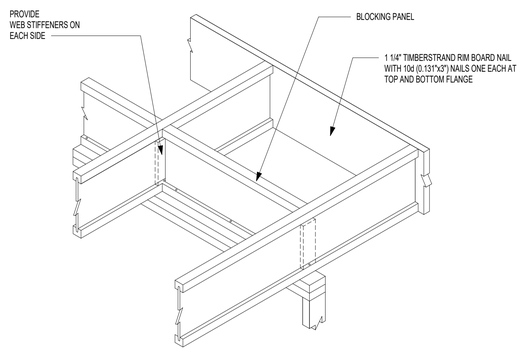

DO NOT CUT FLANGES OR WEB

5 / SD1 CANTILEVER JOIST DETAIL
SCALE: 3/4" = 1'-0"

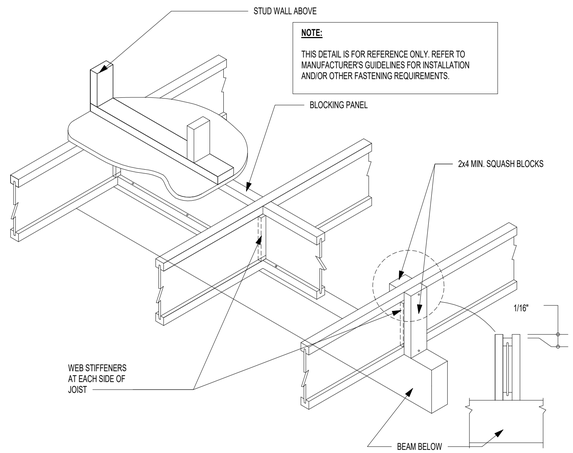

NOTE:

THIS DETAIL IS FOR REFERENCE ONLY. REFER TO MANUFACTURER'S GUIDELINES FOR INSTALLATION AND/OR OTHER FASTENING REQUIREMENTS.

2 / SD1 JOIST W/ INT. BRG. ON BEAM & BRG. WALL FROM ABOVE
SCALE: 3/4" = 1'-0"

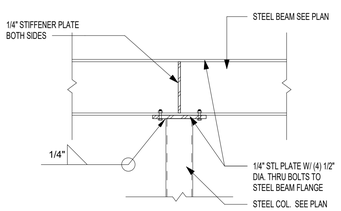

12 / SD1 STEEL BEAM TO STEEL COLUMN - INT. SUPPORT
SCALE: 3/4" = 1'-0"

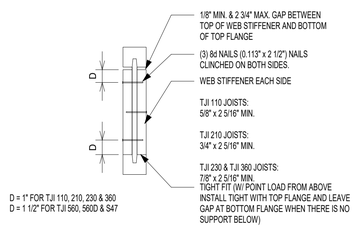

TJI JOIST SERIES	DEPTH	MINIMUM WEB STIFFENER SIZE	NAILING		
			TYPE	END	INTERMEDIATE
110	ALL	5/8" x 2 5/16"	8d (0.113" x 2 1/2")	3	3
210	ALL	3/4" x 2 5/16"			
230 & 360	ALL	7/8" x 2 5/16"			

9 / SD1 TYP. I JOIST WEB STIFFENER SCHEDULE
SCALE: 3/4" = 1'-0"

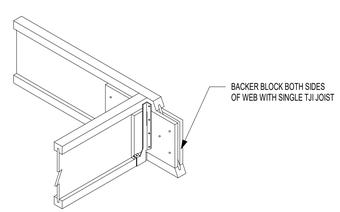

TJI	110		210		230 OR 360		560	
DEPTH	9 1/2" OR 11 7/8"	14"	9 1/2" OR 11 7/8"	14" OR 16"	9 1/2" OR 11 7/8"	14" OR 16"	11 7/8"	14" OR 16"
FILLER BLOCK (1)	2x6	2x8	2x6 + 3/8" SHEATHING	2x8 + 3/8" SHEATHING	2x6 + 1/2" SHEATHING	2x8 + 1/2" SHEATHING	(2) 2x6	(2) 2x8
BACKER BLOCK (1)	5/8" OR 3/4"		3/4" OR 7/8"		7/8" OR 1" NET		2x6	2x8

6 / SD1 SINGLE JOIST TO SINGLE JOIST CONNECTION
SCALE: 3/4" = 1'-0"

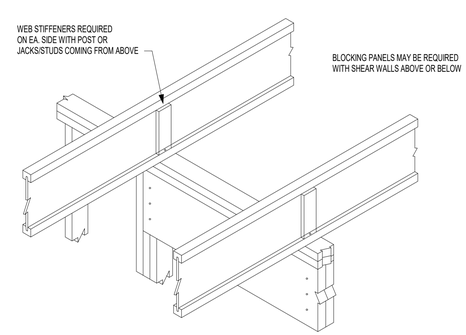

3 / SD1 INTERMEDIATE BEARING
SCALE: 3/4" = 1'-0"

© COPYRIGHT 2016
Structural Engineering content of this drawings are property of structBIM LLC and are issued for this project only. Any re-use or re-production of these drawings shall not be done without written consent of structBIM LLC. These drawings are to be read in conjuction with project specifications and drawings from other consultants. These drawings shall not be used as shop drawings. Do not scale drawings, use dimensions as specified.

GTM ARCHITECTS
7735 OLD GEORGETOWN ROAD
SUITE 700
BETHESDA, MD 20814
(240)333-2000
(240)333-2001 FAX
WWW.GTMARCHITECTS.COM
GTM

Seal

Consultant

structBIM ENGINEERS
WE DESIGN....WE BIM
46400 BENEDICT DR, SUITE #211
PHONE: 703-657-4481
E-MAIL: info@structBIM.com

Project

23 HIGH STREET, LOT 2,
BROOKVILLE, MD

I certify that these documents were prepared or approved by me, and that I am a duly licensed Professional Engineer under the laws of the State of Maryland, license number 40082, Expiration Date: 02-13-2023.

Issue Description	Date

structBIM Project No.	21-0244
Checked By	KK
Drawn By	KK
Scale	3/4" = 1'-0"

Sheet Title
FRAMING DETAILS

Sheet No.
SD1

COPYRIGHT, 2016 structBIMEngineers, LLC.
PLOTTED ON: 4/19/2022 3:02:03 PM

FILE NAME:

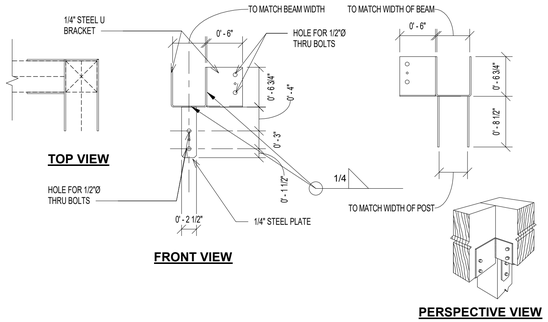

12 SD2 TYPICAL COLUMN CAP DETAIL AT CORNER
SCALE: 1" = 1'-0"

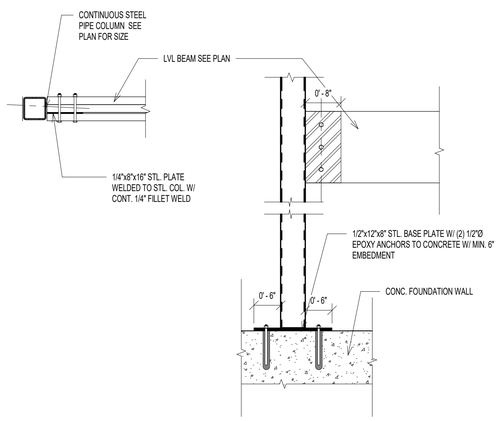

13 SD2 SECTION
SCALE: 3/4" = 1'-0"

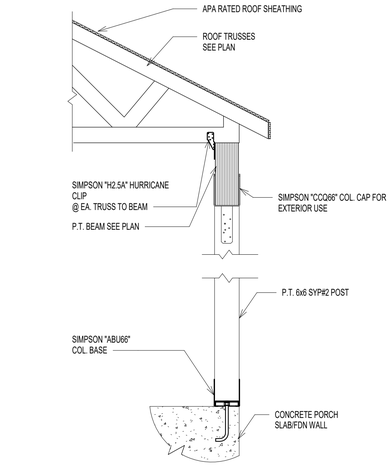

9 SD2 SECTION AT PORCH ROOF
SCALE: 3/4" = 1'-0"

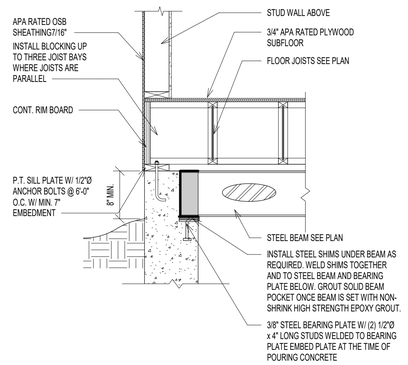

10 SD2 TYP. STEEL BEAM POCKET DETAIL
SCALE: 3/4" = 1'-0"

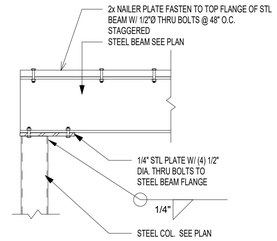

5 SD2 STEEL BEAM TO STEEL COLUMN - END SUPPORT
SCALE: 3/4" = 1'-0"

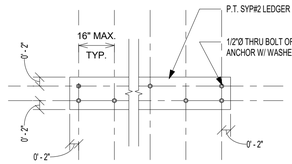

6 SD2 TYP. DECK CONNECTION DETAIL
SCALE: 3/4" = 1'-0"

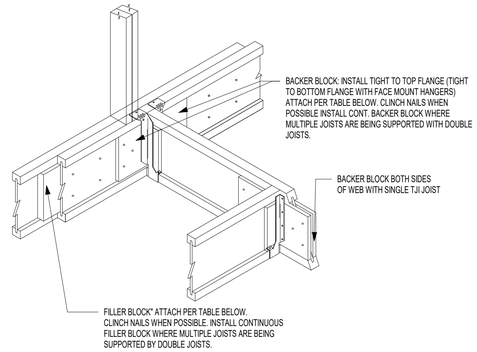

TJI	110		210		230 OR 360		560	
DEPTH	9 1/2" OR 11 7/8"	14"	9 1/2" OR 11 7/8"	14" OR 16"	9 1/2" OR 11 7/8"	14" OR 16"	11 7/8"	14" OR 16"
FILLER BLOCK (1)	2x6	2x8	2x6 + 3/8" SHEATHING	2x8 + 3/8" SHEATHING	2x6 + 1/2" SHEATHING	2x8 + 1/2" SHEATHING	(2) 2x6	(2) 2x8
BACKER BLOCK (1)	5/8" OR 3/4"		3/4" OR 7/8"		7/8" OR 1" NET		2x6	2x8

7 SD2 TYPICAL DBL JOISTS CONNECTION W/ JOIST SUPPORTED
SCALE: 3/4" = 1'-0"

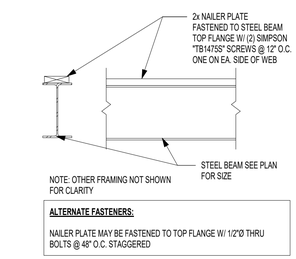

1 SD2 TYP. STEEL BEAM NAILER PLATE CONNECTION
SCALE: 3/4" = 1'-0"

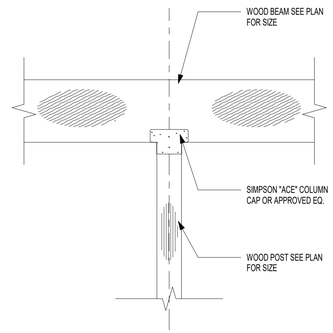

2 SD2 INTERIOR POST W/ COL. CAP CONN.
SCALE: 3/4" = 1'-0"

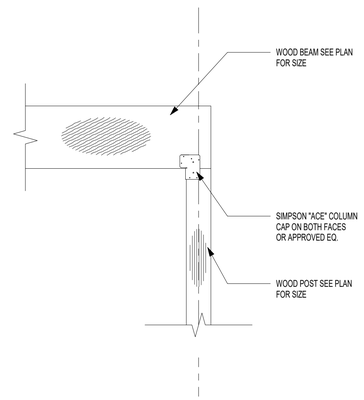

3 SD2 END COL. TO BEAM BEARING CONNECTION
SCALE: 3/4" = 1'-0"

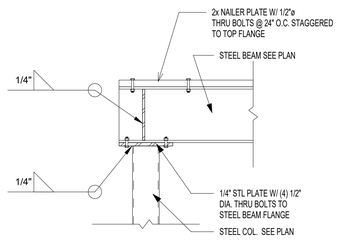

11 SD2 SECTION
SCALE: 3/4" = 1'-0"

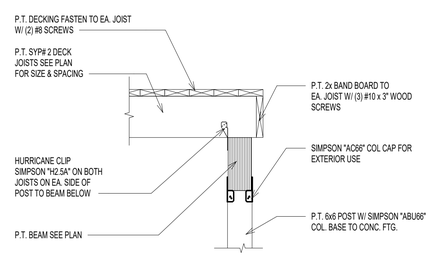

8 SD2 TYP. DECK POST CONNECTION W/ POST FROM ABOVE
SCALE: 3/4" = 1'-0"

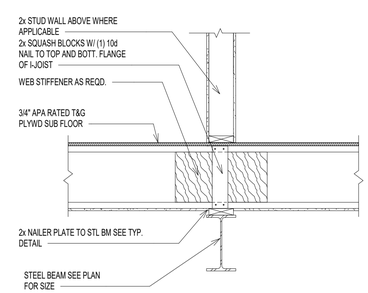

4 SD2 TYP. JOIST BEARING ON STEEL BEAM
SCALE: 3/4" = 1'-0"

REVIEWED
By Michael Kyne at 2:05 pm, May 23, 2022

APPROVED
Montgomery County
Historic Preservation Commission

© COPYRIGHT 2016
Structural Engineering content of this drawings are property of structBIM LLC and are issued for this project only. Any re-use or re-production of these drawings shall not be done without written consent of structBIM LLC. These drawings are to be read in conjuction with project specifications and drawings from other consultants. These drawings shall not be used as shop drawings. Do not scale drawings, use dimensions as specified.

GTM ARCHITECTS
7735 OLD GEORGETOWN ROAD
SUITE 700
BETHESDA, MD 20814
(240)333-2000
(240)333-2001 FAX
WWW.GTMARCHITECTS.COM
GTM

Seal

STATE OF MARYLAND · MICHAEL KAMIL KYNE · 40082 · PROFESSIONAL ENGINEER

Consultant

structBIM ENGINEERS
WE DESIGN....WE BIM
46400 BENEDICT DR, SUITE #211
PHONE: 703-657-4481
E-MAIL: info@structBIM.com

Project

23 HIGH STREET, LOT 2,
BROOKVILLE, MD

I certify that these documents were prepared or approved by me, and that I am a duly licensed Professional Engineer under the laws of the State of Maryland, license number 40082, Expiration Date: 02-13-2023.

Issue Description	*Date*

structBIM Project No.	21-0244
Checked By	KK
Drawn By	KK
Scale	As indicated

Sheet Title
FRAMING DETAILS

Sheet No.
SD2

COPYRIGHT, 2016 structBIMEngineers, LLC.
PLOTTED ON: 4/15/2022 3:02:56 PM

FILE NAME:

Point Load Connector Spacing
8- Screw Connection

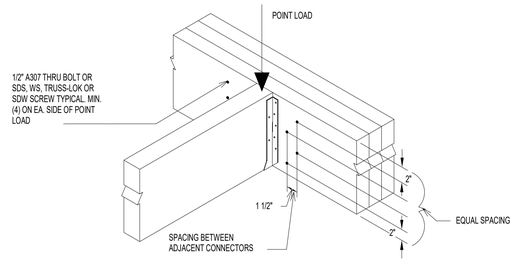

2 / SD3 LVL BEAM CONNECTION AT POINT LOAD
SCALE: 3/4" = 1'-0"

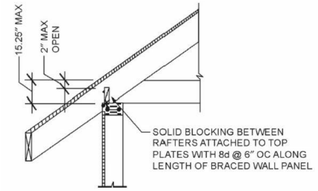

3 / SD3 TYPICAL ROOF BEARING @ BRACED WALL PANEL
SCALE: 3/4" = 1'-0"

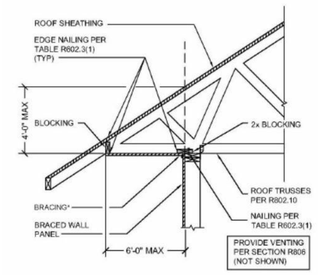

4 / SD3 TYPICAL ROOF BEARING @ BRACED WALL PANEL
SCALE: 3/4" = 1'-0"

ALLOWABLE HOLES

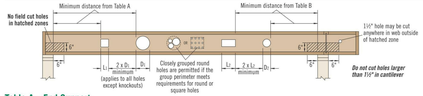

Table A—End Support

Minimum distance from edge of hole to inside face of nearest end support

Depth	TJI®	Round Hole Size 2"	3"	4"	5"	6½"	7"	8½"	11"	13"	Square or Rectangular Hole Size 2"	3"	4"	5"	6½"	7"	8½"	11"	13"
9½"	110	1'-0"	1'-0"	1'-0"	2'-0"	3'-0"					1'-0"	1'-0"	2'-0"	3'-0"	4'-0"				
	210	1'-0"	1'-0"	1'-0"	3'-0"	5'-0"					1'-0"	1'-0"	2'-0"	4'-0"	5'-0"				
	230	1'-0"	1'-0"	1'-0"	3'-0"	5'-0"					1'-0"	1'-0"	2'-0"	4'-0"	5'-0"				
11⅞"	110	1'-0"	1'-0"	1'-0"	1'-0"	2'-0"	2'-0"	5'-0"			1'-0"	1'-0"	1'-0"	2'-0"	4'-0"	4'-0"	6'-0"		
	210	1'-0"	1'-0"	1'-0"	1'-0"	2'-0"	3'-0"	5'-0"			1'-0"	1'-0"	2'-0"	3'-0"	5'-0"	5'-0"	6'-0"		
	230	1'-0"	1'-0"	1'-0"	2'-0"	3'-0"	5'-0"	6'-0"			1'-0"	1'-0"	2'-0"	3'-0"	5'-0"	5'-0"	7'-0"		
	360	1'-0"	1'-0"	1'-0"	2'-0"	4'-0"	5'-0"	7'-0"			1'-0"	1'-0"	2'-0"	4'-0"	6'-0"	6'-0"	7'-0"		
	560	1'-0"	1'-0"	1'-0"	3'-0"	5'-0"	6'-0"	8'-0"			1'-0"	1'-0"	2'-0"	4'-0"	6'-0"	7'-0"	8'-0"		
14"	110	1'-0"	1'-0"	1'-0"	1'-0"	1'-0"	1'-0"	2'-0"	5'-0"		1'-0"	1'-0"	1'-0"	1'-0"	2'-0"	3'-0"	4'-0"	6'-0"	8'-0"
	210	1'-0"	1'-0"	1'-0"	1'-0"	1'-0"	1'-0"	2'-0"	6'-0"		1'-0"	1'-0"	1'-0"	2'-0"	4'-0"	4'-0"	6'-0"	8'-0"	
	230	1'-0"	1'-0"	1'-0"	1'-0"	1'-0"	1'-0"	2'-0"	6'-0"		1'-0"	1'-0"	1'-0"	2'-0"	4'-0"	5'-0"	7'-0"	9'-0"	
	360	1'-0"	1'-0"	1'-0"	1'-0"	2'-0"	3'-0"	5'-0"	8'-0"		1'-0"	1'-0"	1'-0"	2'-0"	5'-0"	6'-0"	8'-0"	9'-0"	
	560	1'-0"	1'-0"	1'-0"	1'-0"	2'-0"	3'-0"	6'-0"	9'-0"		1'-0"	1'-0"	1'-0"	3'-0"	6'-0"	7'-0"	9'-0"	10'-0"	
16"	210	1'-0"	1'-0"	1'-0"	1'-0"	1'-0"	1'-0"	2'-0"	3'-0"	6'-0"	1'-0"	1'-0"	1'-0"	1'-0"	2'-0"	2'-0"	3'-0"	6'-0"	8'-0"
	230	1'-0"	1'-0"	1'-0"	1'-0"	1'-0"	1'-0"	2'-0"	4'-0"	6'-0"	1'-0"	1'-0"	1'-0"	1'-0"	2'-0"	3'-0"	4'-0"	7'-0"	9'-0"
	360	1'-0"	1'-0"	1'-0"	1'-0"	1'-0"	2'-0"	3'-0"	6'-0"	9'-0"	1'-0"	1'-0"	1'-0"	1'-0"	3'-0"	3'-0"	5'-0"	9'-0"	11'-0"
	560	1'-0"	1'-0"	1'-0"	1'-0"	1'-0"	2'-0"	3'-0"	6'-0"	9'-0"	1'-0"	1'-0"	1'-0"	1'-0"	4'-0"	5'-0"	6'-0"	10'-0"	11'-0"
	560	1'-0"	1'-0"	1'-0"	1'-0"	1'-0"	1'-0"	6'-0"	10'-0"		1'-0"	1'-0"	1'-0"	1'-0"	5'-0"	6'-0"	10'-0"	11'-0"	12'-0"

Table B—Intermediate or Cantilever Support

Minimum distance from edge of hole to inside face of nearest intermediate or cantilever support

Depth	TJI®	Round Hole Size 2"	3"	4"	5"	6½"	7"	8½"	11"	13"	Square or Rectangular Hole Size 2"	3"	4"	5"	6½"	7"	8½"	11"	13"
9½"	110	1'-0"	2'-0"	3'-0"	4'-0"	7'-0"					1'-0"	2'-0"	3'-0"	5'-0"	6'-0"				
	210	2'-0"	2'-0"	3'-0"	6'-0"	7'-0"					2'-0"	3'-0"	6'-0"	7'-0"	7'-0"				
	230	2'-0"	3'-0"	4'-0"	5'-0"	8'-0"					2'-0"	3'-0"	4'-0"	6'-0"	7'-0"				
11⅞"	110	1'-0"	1'-0"	1'-0"	2'-0"	4'-0"	4'-0"	8'-0"			1'-0"	1'-0"	2'-0"	4'-0"	6'-0"	7'-0"	9'-0"		
	210	1'-0"	1'-0"	2'-0"	3'-0"	4'-0"	5'-0"	9'-0"			1'-0"	2'-0"	3'-0"	4'-0"	7'-0"	8'-0"	10'-0"		
	230	1'-0"	2'-0"	2'-0"	3'-0"	5'-0"	5'-0"	9'-0"			1'-0"	2'-0"	3'-0"	5'-0"	8'-0"	8'-0"	10'-0"		
	360	2'-0"	3'-0"	4'-0"	5'-0"	7'-0"	7'-0"	11'-0"			2'-0"	3'-0"	5'-0"	7'-0"	9'-0"	9'-0"	11'-0"		
	560	1'-0"	3'-0"	4'-0"	5'-0"	8'-0"	8'-0"	12'-0"			3'-0"	4'-0"	6'-0"	8'-0"	10'-0"	11'-0"	12'-0"		
14"	110	1'-0"	1'-0"	1'-0"	1'-0"	2'-0"	2'-0"	4'-0"	8'-0"		1'-0"	1'-0"	1'-0"	2'-0"	5'-0"	5'-0"	9'-0"	12'-0"	
	210	1'-0"	1'-0"	1'-0"	1'-0"	2'-0"	3'-0"	5'-0"	9'-0"		1'-0"	1'-0"	2'-0"	3'-0"	6'-0"	7'-0"	10'-0"	12'-0"	
	230	1'-0"	1'-0"	1'-0"	1'-0"	2'-0"	3'-0"	5'-0"	10'-0"		1'-0"	1'-0"	2'-0"	4'-0"	6'-0"	7'-0"	10'-0"	13'-0"	
	360	1'-0"	1'-0"	1'-0"	2'-0"	3'-0"	4'-0"	6'-0"	12'-0"		1'-0"	2'-0"	4'-0"	5'-0"	8'-0"	9'-0"	12'-0"	14'-0"	
	560	1'-0"	1'-0"	1'-0"	3'-0"	5'-0"	6'-0"	9'-0"	13'-0"		1'-0"	1'-0"	5'-0"	7'-0"	10'-0"	11'-0"	13'-0"	15'-0"	
16"	210	1'-0"	1'-0"	1'-0"	1'-0"	1'-0"	2'-0"	3'-0"	6'-0"	10'-0"	1'-0"	1'-0"	2'-0"	2'-0"	4'-0"	5'-0"	6'-0"	10'-0"	13'-0"
	230	1'-0"	1'-0"	1'-0"	1'-0"	1'-0"	2'-0"	4'-0"	6'-0"	10'-0"	1'-0"	1'-0"	1'-0"	2'-0"	4'-0"	5'-0"	6'-0"	10'-0"	13'-0"
	360	1'-0"	1'-0"	1'-0"	1'-0"	2'-0"	4'-0"	6'-0"	10'-0"	13'-0"	1'-0"	1'-0"	2'-0"	4'-0"	7'-0"	8'-0"	11'-0"	14'-0"	17'-0"
	560	1'-0"	1'-0"	1'-0"	1'-0"	2'-0"	3'-0"	7'-0"	11'-0"	15'-0"	1'-0"	1'-0"	3'-0"	5'-0"	9'-0"	10'-0"	14'-0"	16'-0"	18'-0"

• Rectangular holes based on measurement of longest side.

How to Use These Tables

1. Using **Table A**, **Table B**, or both if required, determine the hole shape/size and select the TJI® joist and depth.
2. Scan horizontally until you intersect the correct hole size column.
3. Measurement shown is minimum distance from edge of hole to support.
4. Maintain the required minimum distance from the end **and** the intermediate or cantilever support.

General Notes

- Holes may be located vertically anywhere within the web. Leave ¼" of web (minimum) at top and bottom of hole.
- Knockouts are located in web at approximately 12" on-center; they do not affect hole placement.
- For simple span (5' minimum) uniformly loaded joists meeting the requirements of this guide, one maximum size round hole may be located at the center of the joist span **provided that no other holes occur in the joist.**
- Distances are based on the maximum uniform loads shown in this guide. For other load conditions or hole configurations, use Forte™ software or contact your iLevel representative.

1 / SD3 TYPICAL ALLOWABLE HOLE SIZES FOR I JOISTS
SCALE: 3/4" = 1'-0"

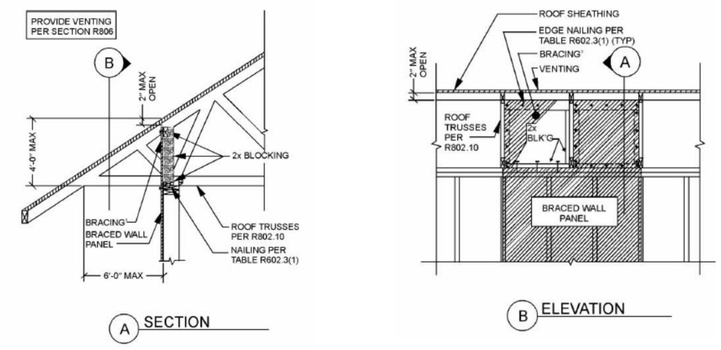

5 / SD3 TYPICAL ROOF BEARING @ BRACED WALL PANEL
SCALE: 3/4" = 1'-0"

ASSEMBLY	A	B	C	D	E	F
SKETCH	2"-0" 2"-0" 0' - 1 3/4"	2"-0" 2"-0" 0' - 1 3/4"	2"-0" 2"-0" 0' - 1 3/4" 0' - 3 1/2"	2"-0" 2"-0" 0' - 1 3/4"	2"-0" 2"-0" 0' - 1 3/4" 0' - 1 3/4" 0' - 3 1/2"	2"-0" 2"-0" 0' - 3 1/2"
FASTNER	SIMPSON - SDW22 x 3 5/8"	SIMPSON - SDW22 x 5"	SIMPSON - SDW22 x 5"	SIMPSON - SDW22 x 6 3/4"	SIMPSON - SDW22 x 6 3/4"	SIMPSON - SDW22 x 6 3/4"
SPACING	12" O.C.	12" O.C.	12" O.C.	12" O.C.	12" O.C.	12" O.C.
NOTE		INSTALL FASTNERS FROM BOTH SIDES STAGGER BY 3" FASTENERS FROM OPPOSITE SIDES		INSTALL FASTNERS FROM BOTH SIDES STAGGER BY 3" FASTENERS FROM OPPOSITE SIDES	INSTALL FASTNERS FROM BOTH SIDES STAGGER BY 3" FASTENERS FROM OPPOSITE SIDES	INSTALL FASTNERS FROM BOTH SIDES STAGGER BY 3" FASTENERS FROM OPPOSITE SIDES

NOTES:

1. CONTACT ENGINEER FOR ALTERNATE FASTENERS IF NEEDED.
2. NOTIFY ENGINEER IF POINT LOAD IS APPLIED ON LVL BEAMS. INSTALL MIN. 8 FASTENERS ON EITHER SIDE OF POINT LOAD WITH 2" SPACING.
3. MAINTAIN MINIMUM EDGE DISTANCE OF 6" FROM ENDS.

2A / SD3 TYP. LVL PLY CONNECTION DETAIL
SCALE: 3/4" = 1'-0"

REVIEWED
By Michael Kyne at 2:05 pm, May 23, 2022

APPROVED
Montgomery County
Historic Preservation Commission

© COPYRIGHT 2016
Structural Engineering content of this drawings are property of structBIM LLC and are issued for this project only. Any re-use or re-production of these drawings shall not be done without written consent of structBIM LLC. These drawings are to be read in conjuction with project specifications and drawings from other consultants. These drawings shall not be used as shop drawings. Do not scale drawings, use dimensions as specified.

GTM ARCHITECTS

7735 OLD GEORGETOWN ROAD
SUITE 700
BETHESDA, MD 20814
(240)333-2000
(240)333-2001 FAX
WWW.GTMARCHITECTS.COM

Seal

Consultant

structBIM ENGINEERS
WE DESIGN....WE BIM
46400 BENEDICT DR, SUITE #211
PHONE: 703-657-4481
E-MAIL: info@structBIM.com

Project

23 HIGH STREET, LOT 2,
BROOKVILLE, MD

I certify that these documents were prepared or approved by me, and that I am a duly licensed Professional Engineer under the laws of the State of Maryland, license number 40082, Expiration Date: 02-13-2023.

Issue Description	*Date*

structBIM Project No.	21-0244
Checked By	KK
Drawn By	KK
Scale	3/4" = 1'-0"

Sheet Title

FRAMING DETAILS

Sheet No.

SD3

COPYRIGHT, 2016 structBIMEngineers, LLC.

PLOTTED ON: 4/15/2022 3:02:09 PM

FILE NAME:

5 4 3 2 1

STANDARDS AND CODES:

- DESIGN BUILDING CODE: INTERNATIONAL RESIDENTIAL CODE 2015 EDITION, STATE OR LOCAL JURISDICTION AMENDMENTS AND/OR ORDINANCES.
- IN ADDITION TO THE REQUIREMENTS INCLUDED IN THESE PROJECT, ALL CONSTRUCTION AND MATERIAL SHALL FURTHER CONFORM TO THE APPLICABLE PROVISIONS FROM LATEST EDITION OF FOLLOWING STANDARDS/CODES AS REQUIRED BY GOVERNING CODE OR LOCAL JURISDICTION.
- ACI (AMERICAN CONCRETE INSTITUTE)-318: BUILDING CODE REQUIREMENTS FOR STRUCTURAL CONCRETE..
- ACI-332: CODE REQUIREMENTS FOR RESIDENTIAL CONCRETE CONSTRUCTION
- ACI-530: BUILDING CODE REQUIREMENTS FOR MASONRY STRUCTURES
- AISC (AMERICAN INSTITUTE OF STEEL CONSTRUCTION): STEEL CONSTRUCTION MANUAL.
- NDS: NATIONAL DESIGN SPECIFICATIONS (NOS) FOR WOOD CONSTRUCTOIN WITH SUPPLEMENT.
- WFCM: WOOD FRAME CONSTRUCTION MANUAL FOR ONE- AND TWO- FAMILY DWELLINGS.
- AFPA: AMERICAN FOREST AND PAPER ASSOCIATOIN - SPAN TABLE FOR JOISTS AND RAFTERS.
- AISI S100: NORTH AMERICAN SPECIFICATION FOR THE DESIGN OF COLD FORMED STEEL STRUCTURAL MEMBERS.
- AISI S230: STANDARD FOR COLD-FORMED STEEL FRAMING-PRESCRIPTIVE METHOD FOR ONE- AND TWO-FAMILY DWELLINGS.
- AMERICAN INSTITUTE OF TIMBER CONSTRUCTION (AITC).
- AMERICAN NATIONAL STANDARDS INSTITUTE (ANSI).
- APA (AMERICAN PLYWOOD ASSOCIATION) E30: ENGINEERED WOOD CONSTRUCTION GUIDE
- ASCE - 5 (AMERICAN SOCIETY OF CIVIL ENGINEERS): BUILDING CODE REQUIREMENTS FOR MASONRY STRUCTURES.
- ASCE-6: SPECIFICATIONS FOR MASONRY STRUCTURES.
- ASCE-7: MINIMUM DESIGN LOADS FOR BUILDING AND OTHER STRUCTURES.
- AMERICAN WOOD COUNCIL (AWC).
- AMERICAN SOCIETY FOR TESTING AND MATERIALS (ASTM).
- AMERICAN WOOD PROTECTION ASSOCIATION (AWPA).
- AMERICAN WELDING SOCIETY (AWS).
- FEDERAL EMERGENCY MANAGEMENT AGENCY (FEMA).
- GYPSUM ASSOCIATION (GA).
- NATIONAL CONCRETE MASONRY ASSOCIATION (NCMA).
- SSPC: STEEL STRUCTURES PAINTING COUNCIL.
- TPI-I: NATOINAL DESIGN STANDARDS FOR METAL-PLATE-CONNECTED WOOD TRUSS CONSTRUCTION.

DESIGN LOADS:

DESCRIPTION	DEAD LOAD	LIVE LOAD	SNOW LOAD (b)
ROOF	17 PSF	-	30 PSF
FLOOR	15 PSF	40 PSF	-
ATTIC W/OUT STORAGE	10 PSF	10 PSF	-
ATTIC W/ LIMITED STORAGE	10 PSF	20 PSF	-
HABITABLE ATTICS & ATTICS W/ FIXED STAIR	10 PSF	30 PSF	-
SLEEPING ROOMS	10 PSF	30 PSF	-
BALCONIES & DECKS	10 PSF	40 PSF	-
STAIRS	10 PSF	40 PSF	-
GUARD RAILS & HAND RAILS	-	200 LBS (c)	-

WIND LOAD:

- WIND SPEED (ULTIMATE): 115 MPH
- WIND PRESSURE: 18 PSF (f)
- WIND EXPOSURE CATEGORY: B

FOUNDATION DESIGN LOADS:

- SOIL BEARING CAPACITY (g): 2000 PSF
- LATERAL EARTH PRESSURE: 60 PSF/FT

EARTHQUAKE LOADS:

- SEISMIC DESIGN CATEGORY: B
- SITE CLASS: B

NOTES:

a. REFER TO IRC TABLE R301.5 FOR MORE INFORMATION.
b. SNOW LOAD SPECIFIED IS GROUND SNOW LOAD ONLY.
c. A SINGLE CONCENTRATED LOAD APPLIED IN ANY DIRECTION AT ANY POINT ALONG THE TOP.
d. MECHANICAL EQUIPMENT LOADS IN EXCESS OF 200 LBS SHALL BE NOTIFIED TO STRUCTURAL ENGINEER.
e. PRE-FABRICATED STRUCTURAL COMPONENT SHALL COMPLY WITH DESIGN LOADS FROM APPLICABLE CODES/STANDARDS IN ADDITION TO LOADS SPECIFIED IN THESE NOTES.
f. WIND PRESSURE SPECIFIED IS FOR MAIN WIND FORCE RESISTING SYSTEM ONLY. WIND PRESSURE & LOADS FOR STRUCTURAL COMPONENTS AND CLADDING SHALL BE DETERMINED BY RESPECTIVE REGISTERED DESIGN PROFESSIONAL PER APPLICABLE STANDARDS/CODES.
g. SOIL BEARING CAPACITY IS ASSUMED UNLESS GEOTECHNICAL REPORT IS PROVIDED PER SITE WORK SECTION.

DEFLECTION CRITERIA:

DESCRIPTION	TOTAL LOAD	LIVE LOAD
ROOF TRUSSES/RAFTERS/CEILING JOISTS	L/240	L/360 OR 1/2" MAX.
FLOOR JOISTS/FLOOR TRUSSES	L/240	L/480 OR 1/2" MAX.
MEMBERS SUPPORTING BRICK/ HORIZONTAL MASONRY MEMBERS	L/600 OR 0.3" MAX.	
JOISTS/TRUSSES SUPPORTING CERAMIC TILE	L/720	

SITE WORK:

- GEOTECHNICAL REPORT WAS NOT PROVIDED AND FOUNDATION DESIGN IS BASED ON ASSUMED SOIL DESIGN CRITERIA AND SHALL BE FIELD VERIFIED.
- BOTTOM OF ALL EXTERIOR FOOTING SHALL BE MINIMUM FROST DEPTH OF 30 INCHES BELOW GRADE OR AS REQUIRED BY GOVERNING AUTHORITY OR CODE, AND SHALL PROJECT 12" IN TO UNDISTURBED VIRGIN SOIL OR ENGINEERED FILL.
- SOIL BEARING CAPACITY SHALL BE VERIFIED ON-SITE BY GEOTECHNICAL ENGINEER.
- ALL BEARING STRATA SHALL BE ADEQUATELY DRAINED PRIOR TO PLACING FOUNDATION CONCRETE.
- THE SIDES OF FOOTINGS MAY BE EARTH-FORMED IF THE EXCAVATION CAN BE KEPT VERTICAL CLEAN AND STABLE. OTHERWISE FORMS MUST BE USED.
- UNBRACED EXCAVATIONS SHALL BE SLOPED NO GRATER THAN 2:1.
- NO EXCAVATION SHALL BE CLOSER THAN ATLEAST A SLOPE OF 2:1 TO THE UNDERSIDE OF ANY EXISTING OR NEW FOOTING WITHOUT THE WRITTEN AND CERTIFIED PERMISSION FROM GEOTECHNICAL ENGINEER.
- STEP FOOTINGS SHALL BE PROVIDED WITH A RATIO OF 2:1.
- FOUNDATION ELEMENTS THAT ARE TO SUPPORT FILL ON BOTH SIDES SHALL BE BACKFILLED SIMULTANEOUSLY AND UNIFORMLY ON BOTH SIDES.
- FOUNDATION ELEMENTS THAT ARE TO SUPPORT FILL ON ONE SIDE ONLY SHALL BE PROPERLY BRACED BY PERMANENT STRUCTURAL ELEMENTS PRIOR TO BACKFILLING. PROVIDE TEMPORARY BRACING AS REQUIRED UNTIL PERMANENT BRACING IN PLACE AND FOUNDATION WALL ACHIEVES DESIRED STRENGTH.
- ENGINEERED FILLS HALL BE PLACED IN 8" MAXIMUM HEIGHT LOOSE LIFTS AND COMPACTED TO 95% OF MAXIMUM DRY DENSITY AT OPTIMUM MOISTURE CONTENT AS ESTABLISHED BY ASTM D-698.
- NO PORTION OF THE STRUCTURAL DRAWINGS SHALL BE USED AS SHOP DRAWINGS. CONTRACTOR IS RESPONSIBLE FOR FURNISHING SHOP DRAWINGS AND SHALL SUBMIT TO ENGINEER OF RECORD FOR REVIEW.
- PROVIDE SHORING AND PROTECTION FOR EXCAVATION BANKS AS NECESSARY TO AVOID CAVING
- PROVIDE 6 MIL POLYETHYLENE VAPOR VARIOUS UNDER SLAB ON GRADE OR AS RECOMMENDED BY GEOTECHNICAL ENGINEER.
- ALL RECOMMENDATIONS SPECIFIED IN GEOTECHNICAL REPORT SHALL BE FOLLOWED ALL THE TIME AND SHALL GOVERN.

GENERAL

- STRUCTURAL ENGINEERING DRAWINGS PREPARED IN THIS SET ARE BASED ON ARCHITECTURAL DRAWINGS AND PROVIDED INFORMATION AND SHALL BE READ IN CONJUNCTION WITH ARCHITECTURAL DRAWINGS.
- DETAILS, SECTIONS AND NOTES SHOWN ON THESE DRAWINGS ARE INTENDED TO BE TYPICAL AND SHALL BE APPLY TO SIMILAR CONDITIONS ELSEWHERE OTHERWISE SHOWN OR NOTED.
- THE STRUCTURAL INTEGRITY OF THE BUILDING IS DEPENDENT UPON COMPLETION OF WORK ACCORDING TO CONTRACT DRAWINGS AND SPECIFICATIONS. THE STRUCTURAL ENGINEER ASSUMES NO LIABILITY FOR THE STRUCTURE DURING CONSTRUCTION. THE METHODS OF CONSTRUCTION AND SEQUENCE OF OPERATIONS IS THE SOLE RESPONSIBILITY OF OWNER/CONTRACTOR.
- TEMPORARY BRACING AND SHORING SHALL BE RESPONSIBILITY OF CONTRACTOR AND SHALL BE DESIGNED BY SPECIALITY ENGINEER PER APPLICABLE CODES/STANDARDS TO ENSURE VERTICAL AND LATERAL STABILITY OF THE STRUCTURE OR PORTION THEREOF DURING THE CONSTRUCTION.
- THE CONTRACTOR SHALL BE RESPONSIBLE FOR PROVIDING NECESSARY UNDERPINNING OR BRACING FOR EXISTING STRUCTURE OR PORTION THEREOF. STRUCTURAL ENGINEER IS NOT RESPONSIBLE FOR ANY DESIGN OR PROVISIONS OF ANY TEMPORARY STRUCTURES.
- DO NOT CHANGE SIZE OR DIMENSIONS OF STRUCTURAL ELEMENTS WITHOUT WRITTEN PERMISSION FROM STRUCTURAL ENGINEER.
- DO NOT SCALE THE DRAWINGS, USE DIMENSIONS SHOWN. COORDINATE AND VERIFY ALL DIMENSIONS WITH ARCHITECTURAL DRAWINGS. ARCHITECTURAL DRAWINGS SUPERCEDES ALL DIMENSIONS SHOWN IN THESE DRAWINGS.
- GENERAL CONTRACTOR IS RESPONSIBLE TO PERFORM ALL NECESSARY TESTINGS PER GOVERNING ASTM STANDARDS FOR SOIL, CONCRETE OR ANY OTHER MATERIALS INVOLVED IN THE PROJECT AND SHOP DRAWINGS OF SUCH DESIGN OR REPORTS OF TESTING SHALL BE SUBMITTED TO ARCHITECT/ENGINEER FOR RECORD AND APPROVAL. ALL SUCH DESIGN OR TEST RESULTS SHALL BE SIGNED AND SEALED BY LICENSED PROFESSIONAL IN STATE OR JURISDICTION WHERE THE PROJECT IS LOCATED.

CAST-IN-PLACE CONCRETE:

- CONCRETE DESIGN AND DETAILING SHALL CONFORM TO THE REQUIREMENTS OF ACI 318 AND ACI 301, LATEST EDITIONS. CONTRACTOR SHALL SUBMIT MIX DESIGNS ACCOMPANIED BY APPROPRIATE GRAPHS AND BACKGROUND DATA FOR APPROVAL. MIX DESIGN SHALL INDICATE 7 AND 28 DAYS STRENGTHS, CEMENT CONTENT, AIR CONTENT, WATER-CEMENT RATIO, AMOUNT OF FINE AND COARSE AGGREGATES, AND ADMIXTURES.
- ALL REINFORCING STEEL SHALL BE DEFORMED BILLET STEEL CONFORMING TO ASTM A615 GRADE 60 AND DETAILED, FABRICATED AND PLACED CONFORMING TO MANUAL OF STANDARD PRACTICE FOR DETAILING CONCRETE STRUCTURES (ACI 315)
- ALL WELDED WIRE FABRIC SHALL CONFORM TO ASTM A185. ALL MESH EDGES SHALL LAP A MIN. OF 2 SQUARES.
- CONCRETE COMPRESSIVE STRENGTHS AT 28 DAYS SHALL BE 3000 psi FOR FOOTINGS, FOUNDATION WALLS AND SLAB ON GRADE IN ENCLOSED SPACES & 3500 psi FOR HORIZONTAL SURFACES EXPOSED TO WEATHER.
- SLUMP AT THE POINT OF DISCHARGE IN TO THE FORMS SHALL BE 4" +/- 1" FOR VERTICAL ELEMENTS AND 6" +/- 1" FOR HORIZONTAL ELEMENTS.
- CAST-IN-PLACE CONCRETE SHALL BE READY-MIX PER ASTM C94.
- ALL CONCRETE EXPOSED TO WEATHER SHALL HAVE A MIN. AIR ENTRAINMENT OF 6% +/- 1% PER ACI 318-08; SECTION: 4.4.1.
- PROVIDE CORNER BARS AT ALL WALL AND FOOTING INTERSECTIONS AND MATCH CONTINUING REINFORCEMENT.
- SEE ARCHITECTURAL DRAWINGS FOR NECESSARY CONCRETE FINISHES.
- RESTRICT ADDITION OF MIX WATER AT THE JOB SITE. DO NOT ADD WATER WITHOUT APPROVAL OF THE INSPECTIONS ENGINEER AND DO NOT EXCEED SLUMP LIMITATIONS.
- ALL GROUTS SHALL BE PRE-MIXED NON-SHRINKABLE, NON-METALLIC FORMULA PRO CONFORMING TO ASTMC827, AND SHALL HAVE A SPECIFIED COMPRESSIVE STRENGTH OF 3000 psi WITHIN 24 HOURS AND 6000 psi AT 28 DAYS. PRE-GROUTING OF BASE PLATES WILL NOT BE PERMITTED.
- PROVIDE KEYED JOINTS BETWEEN ALL NON-MONOLITHIC INTERSECTING CONCRETE ELEMENTS AND JOINTS.
- CONTRACTOR SHALL VERIFY EMBEDDED ITEMS, INCLUDING BUT NOT LIMITED TO ANCHOR BOLTS, BOLT CLUSTERS, WELD PLATES etc. BEFORE PLACING CONCRETE. NOTIFY ENGINEER OF ANY CONFLICTS WITH REBAR.
- CONCRETE EXPOSED TO WEATHER SHALL BE AIR ENTRAINED. TOTAL AIR CONTENT (BY PERCENT OF CONCRETE VOLUME) SHALL BE NOT LESS THAN 5% OR MORE THAN 7%.
- GENERAL CONTRACTOR IS RESPONSIBLE FOR SUBMITTING SHOP DRAWINGS SIGNED AND SEALED BY REGISTERED DESIGN PROFESSIONAL THAT INCLUDES: 1. CONCRETE MIX DESIGN 2. DETAILED REINFORCEMENT SHOP DRAWINGS PER ACI 318 AND ACI DETAILING MANUAL. 3. FORM WORK, SHORING, RE-SHORING OR UNDERPINNING SHOP DRAWINGS AS REQUIRED FOR PROJECT.

REINFORCING STEEL:

- REINFORCING BARS SHALL BE DEFORMED BILLET STEEL CONFORMING TO ASTM A615. REINFORCING BARS SHALL BE GRADE 60, UNLESS NOTED OTHERWISE.
- PLAIN BARS FOR SPIRAL REINFORCEMENT SHALL CONFORM TO ASTM A 615, GRADE 60.
- PLAIN STEEL WELDED WIRE REINFORCEMENT SHALL CONFORM TO ASTM A185.
- WELDED DEFORMED STEEL BAR MATS FOR CONCRETE REINFORCEMENT SHALL CONFORM TO ASTM A184.
- BARS SHALL BE BRANDED BY THE MANUFACTURER WITH BAR SIZE AND GRADE OF STEEL AND CERTIFIED MILL REPORTS SHALL BE SUBMITTED FOR RECORD.
- REINFORCING STEEL SHALL BE DETAILED IN ACCORDANCE WITH THE ACI "MANUAL OF STANDARD PRACTICE FOR DETAILING REINFORCED CONCRETE STRUCTURES", LATEST EDITION.
- PROVIDE MINIMUM CLEAR CONCRETE COVER (a) FOR REINFORCEMENT AS SPECIFIED BELOW UNLESS SPECIFICALLY NOTED OTHERWISE ON THE PLANS:

DESCRIPTION			MIN. COVER (IN.)
CONCRETE CAST AGAINST AND PERMENANTLY EXPOSED TO EARTH			3"
CONCRETE EXPOSED TO EARTH OR WEATHER	#6 THROUGH #18 BARS		2"
	#5 BAR, W31 OR D31 WIRE AND SMALLER		1 1/2"
CONCRETE NOT EXPOSED TO EARTH OR WEATHER	SLAB, WALLS, JOISTS		3/4"
	BEAMS, COLUMNS (PRIMARY REINF., TIES, STIRRUPS, SPIRALS.		1 1/2"
	SHELLS, FOLDED PLATES	#6 BARS AND LARGER	3/4"
		#5 BAR, W31 OR D31 WIRE, AND SMALLER	1/2"

MASONRY:

- CONCRETE BLOCKS USED IN WALLS SHALL CONFORM TO ASTM C90. BRICK SHALL CONFORM TO ASTM C62 AND ASTM C216, AS APPLICABLE. MORTAR FOR BRICK VENEER AND OTHER MASONRY SHALL CONFORM TO ASTM C270, TYPE N. TYPE S MORTAR SHALL BE USED TYPICALL FOR ALL MASONRY, AND TYPE M MORTAR SHALL BE USED FOR BELOW GRADE MASONRY AND/OR MASONRY IN CONTACT WITH SOIL, U.N.O.
- HOLLOW LOAD BEARING UNITS SHALL CONFORM TO ASTM C90, NORMAL WEIGHT TYPE II WITH A MIN. NET COMPRESSIVE UNIT STRENGTH OF 1900 psi. (NET AREA COMPRESSIVE MASONRY STRENGTH fm' = 1500 psi)
- REINFORCED MASONRY WALLS SHALL BE BUILT SUCH THAT CELLS LINE UP VERTICALLY.
- FILLED CELLS SHALL BE FILLED WITH COARSE GROUT. COARSE GROUT SHALL CONFORM TO ASTM C476. PROPERTIES SHALL INCLUDE: 2500 psi AT 28 DAYS, 3/8" MAXIMUM AGGREGATE AND 8"-11" SLUMP. FILLED CELLS MAY ALTERNATIVELY BE FILLED WITH A 3000 psi PEA GRAVEL MIX CONCRETE. TEH PEA GRAVEL MIX SHALL BE PROPORTIONED WITH A MAXIMUM AGGREGATE SIZE OF 3/8" DIAMETER TO PROVIDE A MIN. OF 1/2" CLEARANCE, ADDITIONALLY, THE PEA GRAVEL MIX SHALL PROVIDE AN 8" TO 11" SLUMP.
- A CONTINUOUS REINFORCED CMU/CONCRETE BOND BEAM SHALL BE PROVIDED ON TOP OF EACH WALL. BOND BEAMS SHALL BE MIN. 8"x8" WITH CONTINUOUS (2) #4 REBARS.
- WHERE EXPANSION OR ANY OTHER ANCHORS ARE SHOWN, MASONRY CELLS SHALL BE FULLY GROUTED AT MINIMUM OF 8" ABOVE AND BELOW EACH EXPANSION ANCHOR OR ANY OTHER ANCHORS UNLESS NOTED OTHERWISE.
- UNLESS NOTED OTHERWISE ON PLANS, PROVIDE A MIN. OF (2) FULLY GROUTED COURSES BY 32" LENGTH AT ALL STRUCTURAL STEEL BEARING.
- VERTICAL REINFORCING BARS SHALL BE HELD IN POSITION WITH BAR POSITIONERS @ 8'-0" O.C., AT TOP AND BOTTOM OF BAR WITH MIN. CLEARANCE OF 1/2" FROM MASONRY. THE CLEAR DISTANCE BETWEEN BARS SHALL NOT BE LESS THAN ONE BAR DIAMETER NOR LESS THAN 1". CENTER BARS IN WALLS UNLESS NOTED OTHERWISE.
- REINFORCING BARS SHALL BE STRAIGHT EXCEPT FOR BENDS AROUND CORNERS.
- MIN. LAP SPLICE SHALL BE 36 BAR DIAMETERS. WIRE TIE LAP SPLICES.
- WHEN A FOUNDATION DOWEL DOESN'T LINE UP WITH A VERTICAL CORE. IT SHALL NOT BE SLOPED MORE THAN 1:6. DOWELS SHALL BE GROUTED IN TO A CORE IN VERTICAL ALIGNMENT, EVEN IF IT IS IN A CELL ADJACENT TO VERTICAL WALL REINFORCEMENT.
- HORIZONTAL WALL REINFORCING SHALL BE ZINC COATED COLD DRAWN TRUSS TYPE DUR-O-WALL (OR EQUIVALENT) CONFORMING TO ASTM A82 SPACED AT 16' O.C. MAX. HORIZONTAL JOINT REINFORCING SHALL CONSIST OF (2) 9 GA OR LARGER HORIZONTAL BARS WELD CONNECTED WITH 12 GA OR LARGER CROSS-WIRES. ZINC COATING CONFORM TO ASTM A116-73. LAP SPLICE JOINT REINFORCEMENT 12-INCHES MIN.
- PROVIDE HORIZONTAL JOINT REINFORCEMENT AT MASONRY OPENINGS SUCH AS DOORS AND WINDOWS. CONTINUE JOINT REINFORCING FOR THE FIRST AND SECOND BLOCK COURSE ABOVE AND BELOW MASONRY OPENING. EXTEND JOINT REINFORCING A MIN. OF TWO FEET BEYOND OPENINGS.
- CLEANOUTS SHALL BE PROVIDED IN THE BOTTOM COURSE OF MASNORY IN EACH GROUT POUR WHEN THE POUR HEIGHT EXCEEDS 5'. CLEANOUTS SHALL BE SAW-CUT 4" x 4".
- GROUT POUR HEIGHT SHALL NOT EXCEED 24'. PLACE GROUT IN 5' MAX. LIFTS HEIGHTS.
- CONSOLIDATE GROUT POURS AT THE TIME OF PLACEMENT BY MECHANICAL MEANS AND RECONSOLIDATE AFTER INITIAL WATER LOSS AND SETTLEMENT.
- STORE BLOCKS ON PALLETS AND COVER WITH VISQUEEN.
- PLACE ALL MASONRY IN RUNNING BOND WITH 3/8" MORTAR JOINTS. PROVIDE COMPLETE COVERAGE FACE SHELL MORTAR BEDDING HORIZONTAL AND VERTICALL FULLY MORTAR WEBS IN ALL COURSES OF PIERS, COLUMNS, AND PILASTERS AND ADJACENT TO GROUT CELLS.
- MASONRY CONTROL JOINTS SHALL BE INSTALLED AT LOCATIONS INDICATED ON DRAWINGS. ADDITIONALLY INSTALL MASONRY CONTROL JOINTS SPACE AT 26'-0" O.C.

STRUCTURAL STEEL:

- STRUCTURAL STEEL SHALL CONFORM TO THE LATEST EDITION OF THE AISC "SPECIFICATION FOR THE DESIGN, FABRICATION AND ERECTION OF STRUCTURAL STEEL FOR BUILDINGS".
- ALL W SHAPE STEEL SHALL CONFORM TO ASTM 992 (Fy = 50 KSI).
- ALL HOLLOW STRUCTURAL SECTIONS (HSS) SHALL CONFORM TO ASTM A500, GRADE B.
- ALL OTHER STRUCTURAL STEEL SHALL CONFORM TO ASTM A36 (Fy = 36 KSI).
- ALL ANCHOR BOLTS SHALL CONFORM TO ASTM A307 U.N.O.
- ALL HIGH STRENGTH BOLTS SHALL CONFORM TO ASTM A325 U.N.O.
- BOLTED CONNECTIONS SHALL USE HIGH STRENGTH BOLTS.
- BOLTS IN MOMENT FRAMES SHALL USE HIGH STRENGTH SLIP CRITICAL BOLTS. SLIP CRITICAL CONNECTIONS SHALL HAVE CONTACT SURFACES MEETING CLASS A SURFACE CONDITIONS.
- WELDED CONNECTIONS SHALL CONFORM TO THE LATEST EDITION OF AMERICAN WELDING SOCIETY CODE, AWS D11.
- ALL WELDED CONNECTIONS SHALL USE E70XX, LOW HIDROGEN ELECTRODES U.N.O. ELECTRODES SHALL BE PROTECTED FROM MOISTURE.
- BOLTED CONNECTIONS SHALL CONFORM TO THE REQUIREMENTS OF "SPECIFICATIONS FOR STRUCTURAL JOINTS USING ASTM A325 OR A490 BOLTS" AS APPROVED BY RESEARCH COUNCIL ON STRUCTURAL CONNECTIONS (RCSC). USE BEARING TYPE BOLTS WITH THREAD ALLOWED ACROSS THE SHEAR PLANE.
- ALL STEEL CONNECTIONS SHALL BE WELDED AROUND WITH 1/4" FILLET WELD UNLESS OTHERWISE NOTED, EXCEPT FOR SLOTTED CONNECTIONS.
- EXPANSION BOLTS SHALL BE GALVANIZED CARBON STEEL COMPONENTS, ZINC-PLATED TO COMPLY WITH ASTM B 633 AND FF-S 325, GROUP II, TYPE 4, CLASS I.
- FULL PENETRATION WELDS SHALL BE MADE AGAINST A 1/8" x 1" BACKER PLATE TACK WELDED IN PLACE BELOW THE WELD. PENETRATION WELDS SHALL BE EQUIVALENT IN DEPTH AND LENGTH TO THE PARTS JOINED.
- SUBMIT ALL STRUCTURAL STEEL/LIGHT GAGE SHOP DRAWINGS SIGNED AND SEALED BY A REGISTERED PROFESSIONAL ENGINEER. SHOP DRAWINGS SHALL INCLUDE MEMBER SIZES, MATERIAL SPECIFICATION, CONNECTIONS AND/OR ANY OTHER ITEMS REQUIRED BY GOVERNING BUILDING CODE OR JURISDICTION.
- NO FABRICATION SHALL BE STARTED PRIOR TO SHOP DRAWINGS APPROVAL.

STRUCTURAL LUMBER:

- WOOD CONSTRUCTION, INCLUDING LUMBER, CONNECTIONS, AND DETAILS SHALL COMPLY WITH THE REQUIREMENTS OF AMERICAN INSTITUTE OF TIMBER CONSTRUCTION AND THE NATIONAL FOREST AND PAPER ASSOCIATION'S CURRENT "NATIONAL DESIGN SPECIFICATION FOR WOOD CONSTRUCTION".
- ALL STRUCTURAL WOOD MEMBERS SHALL COMPLY WITH FOLLOWING MINIMUM DESIGN VALUES:

SPECIES		Fb	Ft (a)	Fv (a)	Fc ⊥ (a)	Fc ∥ (b)	E	Emin
HEMFIR #2		850 psi	525 psi	150 psi	405 psi	1300 psi	1300000 psi	470000 psi
SPF #2		875 psi	450 psi	135 psi	425 psi	1150 psi	1400000 psi	510000 psi
THICKNESS	WIDTH	SOUTHERN PINE #2						
2" TO 4"	2" TO 4"	1100 psi	675 psi	175 psi	565 psi	1450 psi	1400000 psi	510000 psi
	5" TO 6"	1000 psi	600 psi	175 psi	565 psi	1400 psi	1400000 psi	510000 psi
	8"	925 psi	550 psi	175 psi	565 psi	1350 psi	1400000 psi	510000 psi
	10"	800 psi	475 psi	175 psi	565 psi	1300 psi	1400000 psi	510000 psi
	12"	750 psi	450 psi	175 psi	565 psi	1250 psi	1400000 psi	510000 psi
MICROLAM LVL (ML)		2600 psi	1555 psi	285 psi	750 psi	2510 psi	1900000 psi	965710 psi
PARALLAM PSL 1.8E		2400 psi	1755 psi	190 psi	425 psi	2500 psi	1800000 psi	914880 psi
PARALLAM PSL 2.0E		2900 psi	2025 psi	290 psi	750 psi	2900 psi	2000000psi	1016535 psi
TIMBERSTRAND LSL1.3E		1900 psi	1075 psi	400 psi	680 psi	1400 psi	1300000psi	660750 psi
TIMBERSTRAND LSL1.55E		2325 psi	1070 psi	310 psi	800 psi	2050 psi	1550000psi	787815 psi

- ALL EXTERIOR WOOD MEMBERS EXPOSED TO WEATHER SHALL BE PRESSURE TREATED PER APPLICABLE CODES/STANDARDS.
- ALL FASTENERS/HARDWARE EXPOSED TO WEATHER OR IN CONTACT WITH TREATED WOOD SHALL BE HOT DIP GALVANIZED OR STAINLESS STEEL OR Z-MAX COATED OR APPROVED FOR SUCH USE BY MANUFACTURER.
- PREVENT DIRECT CONTACT OF INTERIOR WOOD WITH CONCRETE OR MASONRY. PROTECT ALL WOOD FROM MOISTURE BY APPLYING APPROVED WRAP AND AVOID DIRECT CONTACT WITH MASONRY OR CONCRETE.
- CONTRACTOR SHALL SUBMIT SHOP DRAWINGS FOR ENGINEER'S REVIEW AND APPROVAL PRIOR TO ORDERING JOISTS FOR CONSTRUCTION.
- FLOOR & ROOF FRAMING/DIRECTION SHOWN ON THE DRAWINGS ARE SCHEMATIC AND FOR REFERENCE ONLY AND SHALL NOT BE CONSIDERED AS SHOP DRAWINGS. SHOP DRAWINGS FROM MANUFACTRER SHALL BE FOLLOWED FOR JOIST/TRUSS PLACEMENTS.
- ALL MECHANICAL, PLUMBING ELECTRICAL OR ANY OTHER COMPONENTS FROM OTHER DISCIPLINES SHALL BE COORDINATED BY MANUFACTURER IN SHOP DRAWINGS AS WELL AS ON THE FIELD. NOTIFY ARCHITECT/STRUCTURAL ENGINEER IF ANY DESCRIPANCY OR CONFLICT FOUND.
- ALL STRUCTURAL FRAMING MEMBERS SUPPORTING FLOOR JOISTS/TRUSSES ARE DESIGNED BASED ON LAYOUT REPRESENTED ON DRAWINGS. ANY MODIFICATION, CHANGE OR ADDITION SHALL NOT BE DONE WITHOUT PRIOR APPROVAL BY ARCHITECT/ENGINEER. SHOP DRAWINGS SHALL BE SUBMITTED FOR REVIEW FOR ANY SUCH CHANGE.
- ROOF/FLOOR TRUSS MANUFACTURER SHALL PROVIDE NECESSARY BRACING TO WEB MEMBERS AS REQUIRED BY GOVERNING CODE/STANDARD.
- ALL ROOF SHEATHING SHALL BE APA RATED 7/16" C-C, C-D OR STRUCTURAL II WITH SPAN RATING OF 48/24 PER "AMERICAN PLYWOOD ASSOCIATION". PROVIDE MIN. NAILING PATTERN W/ 8d COMMON NAILS @ 6" O.C. ON EDGES AND 12" O.C. IN FIELD. PROVIDE PLYWOOD CLIPS AT PLYWOOD EDGES BETWEEN EACH FRAMING MEMBER.
- ALL FLOOR SHEATHING SHALL BE 3/4" THICK T&G APA RATED AND WITH SPAN RATING OF 48/24 OR STURD-I-FLOOR 24" O.C. RATED PLYWOOD SHALL BE GLUED AND NAILED. INSTALL 100% GLUE LINE AND MIN. NAILING PATTERN OF 10d COMMON NAILS @ 6" O.C. ON EDGE SUPPORTS AND 12" O.C. INTERMEDIATE SUPPORTS.
- ALL EXTERIR STUD WALL SHEATHING SHALL BE MIN. 7/16" APA RATED NAILED WITH 8d NAILS @ 6" O.C. ON EDGES AND 12" O.C. IN FIELD U.N.O. REFER TO SHEAR WALL SCHEDULE FOR MORE INFORMATION.
- ALL WOOD PLATE SPLICES SHALL BE STAGGERED AT 4'-0" MIN.
- PROVIDE MIN. (2) 2x12 UP TO 4'-0" SPAN, (2) ML10 FOR 4'-0" TO 6'-0" SPAN, (2) ML12 FOR 6'-0" TO 9'-0" SPAN WHERE HEADER/LINTEL/BEAM SIZES ARE NOT SPECIFIED ON PLANS. ANY SPANS LARGER THAN 9'-0" SUPPORITNG FRAMING MEMBERS (POSTS/BEAMS/BEARING WALLS) AND NOT SPECIFIED ON PLANS SHALL BE NOTIFIED TO ENGINEER IMMEDIATELY.
- PROVIDE MIN. DOUBLE JOISTS OR SPECIAL FLOOR TRUSS UNDER (2) 2x POSTS AND (2) PLY MICROLAM LVL OR SPECIAL FLOOR TRUSS TO MATCH FLOOR THICKNESS UNDER (3) 2x POSTS UNLESS NOTED OTHERWISE ON THE PLAN. CONTRACTOR SHALL NOTIFY ENGINEER FOR SUPPORTING STRUCTURAL MEMBER FOR ALL OTHER POST SIZES COMING FROM ABOVE.
- PROVIDE MIN. (3) 2x POSTS UNDER ALL BEAMS/GIRDER TRUSSES/HEADERS U.N.O. ON PLANS.
- PROVIDE SOLID BLOCKING WITHIN FLOOR SYSTEM FOR POSTS/JACKSTUDS COMING FROM ABOVE.
- ALL POSTS/JACKS SHALL CONTINUE DOWN TO FOUNDATION/STRUCTURAL MEMBERS SUCH AS BEAMS/GIRDERS/GIRDER TRUSSES. NOTIFY ENGINEER IF ANY DESCRIPANCY FOUND DURING CONSTRUCTION.
- PROVIDE DOUBLE JOISTS OR SPECIAL TRUSS UNDER ALL WALLS/PARTITIONS EXTEND 1/2 OR MORE OF FRAMING SPAN.
- PROVIDE BLOCKING BETWEEN TOP FLANGE/CHORD OF JOISTS/FLOOR TRUSS SUPPORTING PARTITION WALL FROM ABOVE.
- PROVIDE FULL HEIGHT BLOCKING BETWEEN FLOOR JOISTS/TRUSSES SUPPORTING BEARING WALL FROM ABOVE.
- ALL DIMENSION LUMBER SHALL BE DRESSED S4S AND SHALL BEAR GRADE STAMP OF THE MANUFACTURER'S ASSOCIATION.
- ALL LUMBER SHALL BE SEASONED AND FREE FROM WRAP.
- PROVIDE SOLID BLOCKING BETWEEN JOISTS AND RAFTERS AT ALL BEARING POINTS AND AT MIN. OF 8'-0" O.C.
- PROVIDE STRONG BACKS AT MIN. OF 10'-0" O.C. AT ALL FLOOR TRUSSES.
- PROVIDE CONTINUOUS RIM BOARD AT PERIMETER AND AT END BEARING WALLS WHEN I-JOISTS ARE USED FOR FLOOR FRAMING.
- PROVIDE MIN. 1 3/4" BEARING AT END AND 3 1/2" MIN. BEARING AT INTERMEDIATE SUPPORT WHEN I-JOISTS ARE USED FOR FLOOR FRAMING.
- PROVIDE WEB-STIFFENERS, SQUASH BLOCKS, BEARING BLOCKS, BLOCKING PANELS, FILLER BLOCKS, BACKER BLOCKS AS RECOMMENDED BY MANUFACTURER. REFER TO MANUFACTURER'S GUIDELINES FOR INSTALLATION AND FASTENING.
- PRE-ENGINEERED/PRE-FABRICATED WOOD ROOF/FLOOR TRUSSES SHALL BE IN ACCORDANCE WITH "DESIGN SPECIFICATIONS FOR METAL PLATE CONNECTED WOOD TRUSSES " BY "TRUSS PLATE INSTUTE (TPI - I)"
- PROVIDE HURRICANE CLIPS TO RESIST UPLIFT AS SHOWN ON SHOP DRAWINGS. PROVIDE SIMPSON "H2.5" HURRICANE CLIP MIN.
- REFER & FOLLOW "BCSI" GUIDES B1 THRU B11 FOR HANDLING, INSTALLING, RESTRAINING AND BRACING OF METAL PLATE CONNECTED WOOD TRUSSES.
- INSTALLATION OF PRE-ENGINEERED/PRE-FABRICATED ROOF AND/OR FLOOR TRUSSES SHALL BE DONE PER TRUSS DESIGN DRAWINGS AND TRUSS ENGINEER SHALL BE RESPONSIBLE FOR PROVIDING ANY REPAIRS OR ALTERATIONS IN TRUSS CONFIGURATIONS.

EXISTING CONDITIONS:

- ALL EXISTING STRUCTURAL MEMBERS TO REMAIN INTACT UNLESS SPECIFICALLY NOTED TO BE REMOVED BY MOST RECENT DEMOLITION DOCUMENTS BY ARCHITECT OR OTHERWISE NOTED ON THESE DRAWINGS.
- ALL INFORMATION ON THESE DRAWINGS RELATED TO EXISTING CONDITIONS ARE PROVIDED BASED ON AVAILABLE CONTRACT DRAWINGS OR INFORMATION PER ARCHITECTURAL DRAWINGS. CONTRACTOR IS RESPONSIBLE FOR FIELD VERIFYING ALL EXISTING CONDITIONS AND NOTIFY STRUCTURAL ENGINEER IF ANY DISCREPANCY IS FOUND BETWEEN CONTRACT DRAWINGS AND EXISTING CONDITIONS.
- THE PORTION OF THE STRUCTURE THAT IS SHOWN TO BE STRUCTURALLY MODIFIED HAVE BEEN DESIGNED ACCORDING TO BEST ENGINEERING PRACTICE. HOWEVER WE DO NOT ASSUME RESPONSIBILITY FOR ANY DAMAGE THAT MAY ARISE FOR ANY PORTION OF THE BUILDING NOT REDESIGNED, ALTERED OR CONSTRUCTED UNDER THIS SET OF DESIGN DRAWINGS. WE DO NOT ASSUME ANY RESPONSIBILITY OR LIABILITY TOWARDS DEFICIENCIES IN THE CONDITION OF THE BUILDING PRIOR TO RENOVATION PER NEW CONTRACT DRAWINGS.
- CONTRACTOR SHALL FIELD VERIFY ALL DIMENSIONS PRIOR TO COMMENCEMENT OF ANY WORK.

WOOD FASTENERS/CONNECTORS:

- FASTENERS USED BELOW GRADE TO ATTACH PLYWOOD TO EXTERIOR WALLS OR CRAWL SPACE STUD WALLS OR KNEE WALL CONSTRUCTION OVER FOUNDATION SHALL BE TYPE 304 OR 316 STAINLESS STEEL.
- ALL MECHANICAL WOOD CONNECTORS SHALL BE CLEARLY SPECIFIED ON SHOP DRAWINGS SUPPLIED BY MANUFACTURER AND SHALL BE DESIGNED FOR APPROPRIATE LOAD AS REQUIRED BY GOVERNING CODE/JURISDICTION.
- ALL MECHANICAL CONNECTORS AND/OR FASTENERS INCLUDING NAILS/BOLTS/SCREWS EXPOSED TO CONCRETE/MASONRY/WEATHER SHALL BE HOT DIP GALVANIZED OR STAINLESS STEEL OR APPROVED BY MANUFACTURER FOR SUCH USE.
- BOLT HOLES SHALL BE A MIN. OF 1/32" TO A MAX. OF 1/16" LARGER THAN THE BOLT DIAMETER.
- A METAL PLATE OR WASHER NOT LESS THAN A STANDARD OVERSIZED CUT WASHER SHALL BE BETWEEN THE WOOD AND THE BOLT HEAD AND BETWEEN THE WOOD AND THE NUT.
- SNUG TIGHT ALL BOLTS. TIGHTEN CONNECTIONS WHICH HAVE LOOSENED DUE TO WOOD SHRINKAGE.
- INSTALL BOLTS TO EXCLUDE THREADED PORTIONS OF BOLTS FROM SHEAR PLANES.
- LAG SCREWS SHALL BE INSTALLED IN PRE-DILLED HOLES.
- THE CLEARANCE HOLE FOR THE SHANK SHALL HAVE THE SAME DIAMETER AS THE SHANK AND THE SAME DEPTH OF PENETRATION AS THE LENGTH OF THE SHANK.
- THE LEAD HOLE FOR THE THREADED PORTION SHALL HAVE A DIAMETER EQUAL TO 75% FOR SOUTHERN PINE, 70% FOR OTHER SPECIES OF THE SHANK DIAMETER AND A MIN. LENGTH EQUAL TO LENGTH OF THREADED PORTION.
- WOOD SILL PLATE SHALL BE ANCHORED TO CONCRETE/MASONRY W/ 1/2" DIA. ANCHOR BOLTS WITH MIN. 7" EMBEDMENT AND 6'-0" O.C. AND 12" MAX. FROM PLATE ENDS OR SPLICES. REFER TO MANUFACTURER'S RECOMMENDATIONS FOR ALTERNATE ANCHORS. REFER TO SHEAR WALL SCHEDULE FOR ADDITIONAL ANCHORAGE REQUIREMENTS. PROVIDE MIN. 3"x3" WASHERS TO ANCHOR BOLTS WITH ENGINEERED SHEAR WALLS (SW) ARE SPECIFIED ON DRAWINGS.
- REFER TO FASTENING SCHEDULE FOR MORE INFORMATION.

NOTES ON FASTENER SCHEDULE (IRC 2015 - TABLE R602.3(1)):

a. ALL NAILS ARE SMOOTH-COMMON, BOX OR DEFORMED SHANKS EXCEPT WHERE OTHERWISE STATED. NAILS USED FOR FRAMING AND SHEATHING CONNECTIONS SHALL HAVE MIN. AVERAGE BENDING YIELD STRENGTHS AS SHOWN 80 ksi FOR SHANK DIAMETER OF 0.192 INCHES, 90 ksi FOR SHANK DIAMETERS LARGER THAN 0.142 INCHES BUT NOT LARGER THAN 0.177 INCHES AND 100 ksi FOR SHANK DIAMETERS OF 0.142 INCHES OR LESS
b. STAPLES ARE 16 GAGE WIRE AND HAVE A MINIMUM 7/16 INCH ON DIAMETER CROWN WIDTH
c. NAILS SHALL BE SPACED AT NOT MORE THAN 6" O.C. AT ALL SUPPORTS WHERE SPANS ARE 48" OR GREATER
d. 4'-0" x 8'-0" OR 4'-0" x 9'-0" PANELS SHALL BE APPLIED VERTICALLY.
e. SPACING OF FASTENERS NOT INCLUDED IN THIS TABLE SHALL BE BASED ON TABLE R602.3(2) OF IRC 2015.
f. FOR REGIONS HAVING BASIC WIND SPEED OF 110 MPH OR GREATER 8d DEFORMED (2 1/2" x 0.120) NAILS SHALL BE USED FOR ATTACHING PLYWOOD AND WOOD STRUCTURAL PANEL ROOF SHEATHING TO FRAMING WITHIN MIN. 48" DISTANCE FROM GABLE END WALLS, IF MEAN ROOF HEIGHT IS MORE THAN 25'-0" UP TO 35'-0" MAXIMUM.
g. FOR REGIONS HAVING BASIC WIND SPEED OF 100 MPH OR LESS, NAILS FOR ATTACHING WOOD STRUCTURAL PANEL ROOF SHEATHING TO GABLE END WALL FRAMING SHALL BE SPACED 6" O.C. WHEN BASIC WIND SPEED IS GREATER THAN 100 MPH, NAILS FOR ATTACHING PANEL ROOF SHEATHING TO INTERMEDIATE SUPPORTS SHALL BE SPACED 6" O.C. FOR MIN. 48" DISTANCE FROM RIDGES, EAVES AND GABLE END WALLS; AND 4" O.C. TO GABLE END WALL FRAMING.
h. GYPSUM SHEATHING SHALL CONFORM TO ASTM C 1396 AND SHALL BE INSTALLED IN ACCORDANCE WITH GA 253. FIBERBOARD SHEATHING SHALL CONFORM TO ASTM C 208.
i. SPACING OF FASTENERS ON FLOOR SHEATHING PANEL EDGES APPLIES TO PANEL EDGES SUPPORTED BY FRAMING MEMBERS AND REQUIRED BLOCKING AND AT ALL FLOOR PERIMETERS ONLY. SPACING OF FASTENERS ON ROOF SHEATHING PANEL EDGES APPLIES TO PANEL EDGES SUPPORTED BY FRAMING MEMBERS AND REQUIRED BLOCKING. BLOCKING OF ROOF OR FLOOR SHEATHING PANEL EDGES PERPENDICULAR TO THE FRAMING MEMBERS NEED NOT BE PROVIDED EXCEPT AS REQUIRED BY OTHER PROVISIONS OF THE CODE. FLOOR PERIMETER SHALL BE SUPPORTED BY FRAMING MEMBERS OR SOLID BLOCKING.

ABBREVIATIONS:

ARCH=	ARCHITECTURAL
B.E.W=	BOTTOM EACH WAY
BM=	BEAM
BRG=	BEARING
COL=	COLUMN
CONC.=	CONCRETE
CONT=	CONTINUOUS
DBL=	DOUBLE
EA=	EACH
E.E.=	EACH END
EXP=	EXPANSION
EXT.=	EXTERIOR
FDN=	FOUNDATION
FTG=	FOOTING
G.T.=	GIRDER TRUSS
HDR=	HEADER
INT.=	INTERIOR
INFO	INFORMATION
J=	JACK STUD
MANUF=	MANUFACTURER
MIN=	MINIMUM
MAX=	MAXIMUM
ML=	MICROLAM
N.T.S=	NOT TO SCALE
O.C.=	ON CENTER
PLYWD=	PLYWOOD
P.T.=	PRESSURE TREATED
P.A. =	POST FROM ABOVE
REQD=	REQUIRED
S=	KING STUD
SPF=	SPRUCE PINE FIR
SP=	SOUTHERN PINE
STL=	STEEL
TYP=	TYPICAL
W/=	WITH
WD=	WOOD
WWF=	WELDED WIRE FABRIC
U.N.O.=	UNLESS NOTED OTHERWISE

REVIEWED
By Michael Kyne at 2:05 pm, May 23, 2022

APPROVED
Montgomery County
Historic Preservation Commission

NO.	DESCRIPTION OF BUILDING ELEMENT	FASTNERS
1	BLOCKING BETWEEN JOISTS OR RAFTERS TO TOP PLATE (TOE NAIL)	(3) 8d (2 1/2" x 0.113")
2	CEILING JOISTS TO PLATE (TOE NAIL)	(3) 8d (2 1/2" x 0.113")
3	CEILING JOISTS NOT ATTACHED TO PARALLEL RAFTER, LAPS OVER PARTIAIONS (FACE NAIL)	(3) 10d
4	COLLAR TIE RAFTER (FACE NAIL) OR 1 1/4" x 20 GAGE RIDGE STRAP	(3) 10d (3" x 0.128")
5	RAFTER TO PLATE (TOE NAIL)	(2) 16d (3 1/2" x 0.135")
6	ROOF RAFTERS TO RIDGE, VALLEY OR HIP RAFTERS TOE NAILS FACE NAILS	 (4) 16d (3 1/2" x 0.135") (3) 16d (3 1/2" x 0.135")
7	BUILT-UP CORNER STUDS	10d (3" x 0.128") @ 24" O.C.
8	BUILT-UP HEADER, TWO PIECES W/ 1/2" SPACER	16d (3 1/2" x 0.135") @ 16" O.C. ALONG EACH EDGE
9	CONTINUED HEADER, TWO PIECES	16d (3 1/2" x 0.135") @ 16" O.C. ALONG EACH EDGE
10	CONTINUOUS HEADER TO STUD (TOE NAIL)	(4) 8d (2 1/2" x 0.113")
11	DOUBLE STUDS (FACE NAILS)	10d (3" x 0.128") @ 24" O.C.
12	DOUBLE TOP PLATES (FACE NAILS)	10d (3" x 0.128") @ 24" O.C.
13	DOUBLE TOP PLATES, MIN. 48" OFFSET OF END JOINSTS (FACE NAILS IN LAPPED AREA)	(8) 16d (3 1/2" x 0.135")
14	SOLE PLATE TO JOIST OR BLOCKING (FACE NAIL)	16d (3 1/2" x 0.135") @ 16" O.C.
15	SOLE PLATE TO JOIST OR BLOCKING (FACE NAIL) AT BRACED WALL PANELS	(3) 16d (3 1/2" x 0.135") @ 16" O.C.

NO.	DESCRIPTION OF BUILDING ELEMENT	FASTNERS
16	STUD TO SOLE PLATE (TOE NAIL)	(3) 8d (2 1/2" x 0.113") OR (2) 16d (3 1/2" x 0.135")
17	TOP OR SOLE PLATE TO STUD (END NAIL)	(2) 16d (3 1/2" x 0.135")
18	TOP PLATES, LAPS AT CORNERS AND INTERSECTIONS (FACE NAIL)	(2) 10d (3" x 0.128")
19	1" BRACE TO EACH STUD AND PLATE (FACE NAIL)	(2) 8d (2 1/2" x 0.113") OR (2) STAPLES 1 3/4"
20	1" x 6" SHEATHING TO EACH BEARING (FACE NAIL)	(2) 8d (2 1/2" x 0.113") OR (2) STAPLES 1 3/4"
21	1" x 8" SHEATHING TO EACH BEARING (FACE NAIL)	(2) 8d (2 1/2" x 0.113") OR (3) STAPLES 1 3/4"
22	WIDER THAN 1" x 8" SHEATHING TO EACH BEARING (FACE NAIL)	(3) 8d (2 1/2" x 0.113") OR (4) STAPLES 1 3/4"
23	JOIST TO SILL OR GIRDER (TOE NAIL)	(3) 8d (2 1/2" x 0.113")
24	1" x 6" SUBFLOOR OR LESS TO EACH JOIST (FACE NAIL)	(2) 8d (2 1/2" x 0.113") OR (2) STAPLES 1 3/4"
25	2" SUBFLOOR TO JOIST OR GIRDER (BLIND AND FACE NAIL)	(2) 16d (3 1/2" x 0.135")
26	RIM JOIST TO TOP PLATE (TOE NAIL) ROOF APPLICATOIN ALSO	8d (2 1/2" x 0.113") @ 6" O.C.
27	2" PLANKS (PLANK & BEAM - FLOOR & ROOF)	(2) 16d (3 1/2" x 0.135") @ E.E.
28	BUILT-UP GIRDERS & BEAMS, 2" LUMBER LAYERS	10d (3" x 0.128") NAIL EA. LAYER 32" O.C. AT TOP AND BOTT. STAGGERED. TWO NAILS AT ENDS AND AT EA. SPLICE.
29	LEDGER STRIP SUPPORTING JOISTS OR RAFTERS	(3) 16d (3 1/2" x 0.135") AT EACH JOIST OR RAFTER

NO.	BUILDING MATERIALS	DESCRIPTION OF FASTENERS	NAILING PATTERN EDGES	NAILING PATTERN INTERMEDIATE SUPPORTS
WOOD STRUCTURAL PANELS, SUBFLOOR, ROOF AND INTERIOR WALL SHEATHING TO FRAMING & PARTICLE BOARD WALL SHEATHING TO FRAMING				
30	3/8" - 1/2"	6d (2" x 0.113") COMMON NAIL (SUBFLOOR, WALL) (j) 8d (2 1/2" x 0.131") COMMON NAIL (ROOF)	6"	12" (g)
31	5/16" - 1/2"	6d (2" x 0.113") COMMON NAIL (SUBFLOOR, WALL) 8d (2 1/2" x 0.131") COMMON NAIL (ROOF) (f)	6"	12" (g)
32	19/32" - 1"	8d (2 1/2" x 0.131") COMMON NAIL	6"	12" (g)
33	1 1/8" - 1 1/4"	10d (3" x 0.148") COMMON NAIL OR 8d (2 1/2" x 0.131") DEFORMED NAIL	6"	12"
OTHER WALL SHEATHING (h)				
34	1/2" STRUCTURAL CELLULOSIC FIBERBOARD SHEATHING	1/2" GALVANIZED ROOFING NAIL, 7/16' CROWN OR 16 GA. STAPLE, 1" CROWN & 1 1/4" LONG	3"	6"
35	25/32" STRUCTURAL CELLULOSIC FIBERBOARD SHEATHING	1 3/4" GALVANIZED ROOFING NAIL, 7/16' CROWN OR 16 GA. STAPLE, 1" CROWN & 1 1/2" LONG	3"	6"
36	1/2" GYPSUM SHEATHING (d)	1 1/2" GALVANIZED ROOFING NAIL OR 1 1/2" LONG GALVANIZED STAPLES, OR 1 1/4" SCREWS TYPE W OR S.	7"	7"
37	1/2" GYPSUM SHEATHING (d)	1 3/4" GALVANIZED ROOFING NAIL OR 1 5/8" LONG GALVANIZED STAPLES, OR 1 5/8" SCREWS TYPE W OR S.	7"	7"
WOOD STRUCTURAL PANELS, COMBINATION OF SUBFLOOR UNDERLAYMENT TO FRAMING				
38	3/4" AND LESS	6d (2" x 0.120") DEFORMED NAIL OR 8d (2 1/2" x 0.131") COMMON NAIL	6"	12"
39	7/8" - 1"	8d (2 1/2" x 0.131") COMMON NAIL OR 8d (2 1/2" x 0.120") DEFORMED NAIL	6"	12"
40	1 1/8" - 1 1/4"	10d (3" x 0.148") COMMON NAIL OR 8d (2 1/2" x 0.120") DEFORMED NAIL	6"	12"

© COPYRIGHT 2016
Structural Engineering content of this drawings are property of structBIM LLC and are issued for this project only. Any re-use or re-production of these drawings shall not be done without written consent of structBIM LLC. These drawings are to be read in conjuction with project specifications and drawings from other consultants. These drawings shall not be used as shop drawings. Do not scale drawings, use dimensions as specified.

GTM ARCHITECTS

7735 OLD GEORGETOWN ROAD
SUITE 700
BETHESDA, MD 20814
(240)333-2000
(240)333-2001 FAX
WWW.GTMARCHITECTS.COM

GTM

Seal

Consultant

structBIM ENGINEERS
WE DESIGN....WE BIM
46400 BENEDICT DR, SUITE #211
PHONE: 703-657-4481
E-MAIL: info@structBIM.com

Project

23 HIGH STREET, LOT 2, BROOKVILLE, MD

I certify that these documents were prepared or approved by me, and that I am a duly licensed Professional Engineer under the laws of the State of Maryland, license number 40082, Expiration Date: 02-13-2023.

N

Issue Description	Date

structBIM Project No.	21-0244
Checked By	KK
Drawn By	KK
Scale	1/4" = 1'-0"

Sheet Title
GENERAL NOTES

Sheet No.
SG

COPYRIGHT, 2016 structBIMEngineers, LLC.
PLOTTED ON: 4/15/2022 3:02:12 PM

FILE NAME:

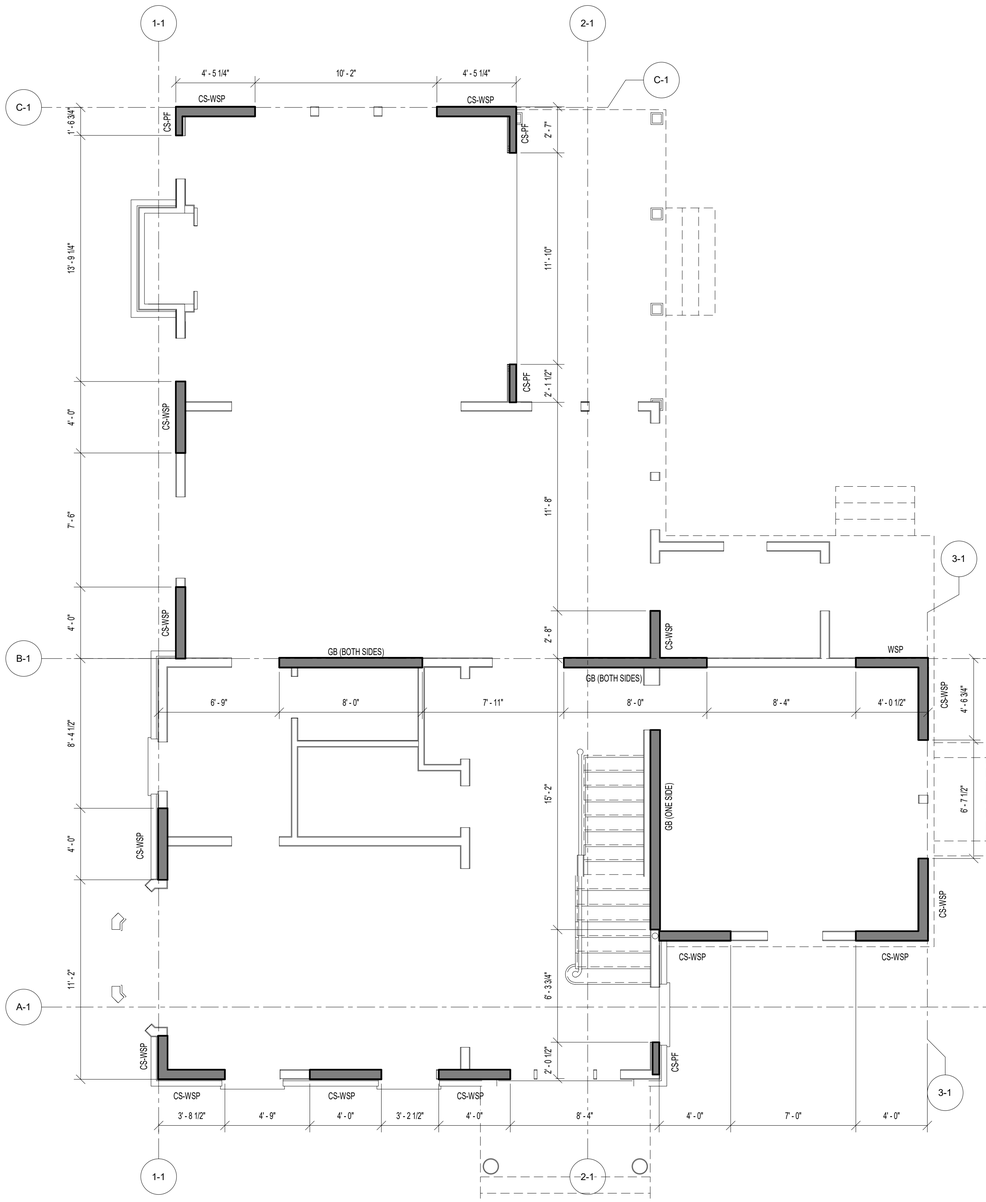

1 SWB1 FIRST FLOOR WALL BRACING PLAN
SCALE: 1/4" = 1'-0"

REVIEWED
By Michael Kyne at 2:05 pm, May 23, 2022

APPROVED
Montgomery County
Historic Preservation Commission

PLAN LEGENDS & SYMBOLS:

- INDICATES BEARING WALL
- INDICATES DRAIN HOLE FROM ABOVE
- INDICATES JOIST/TRUSS HANEGR (REFER TO SHOP DWGS)
- INDICATES FRAMING DIRECTION
- INDICATES REBAR DIRECTION
- (J+_S) — INDICATES NO. OF KING STUDS AT EACH END; INDICATES NO. OF JACK STUDS AT EACH END
- WF?? — INDICATES WALL FOOTING; WIDTH OF WALL FOOTING IN INCHES
- TS?? — INDICATES THICKENED SLAB; WIDTH OF THICKENED SLAB IN INCHES
- F.x.x — INDICATES ISOLATED COLUMN FOOTING; INDICATES SIZE OF FOOTING IN DECIMAL FEET
- ML?? — MICROLAM LVL 2.0E; DEPTH OF MICROLAM LVL IN INCHES
- LSL?? — LAMINATED STRAND LUMBER 1.7E; DEPTH OF TIMBERSTAND LSL BEAM IN INCHES
- PSL?? — PARALLAM STRAND LUMBER 2.0E; WIDTHxDEPTH OF MEMBER
- CC — COLUMN CAP
- CB — COLUMN BASE
- HD — HOLD DOWN ANCHOR
- MS — METAL STRAP
- H — JOIST/TRUSS/BEAM HANGER
- HC — HURRICANE CLIPS

Ultimate Wind Speed (mph)	115											
BWL Designation	A-1		B-1		C-1		1-1		2-1		3-1	
No. of Floors above BWL	1		1		1		1		1		1	
BWP Method	CS-WSP		GB		CS-WSP		CS-WSP		GB		CS-WSP	
Average BWL Spacing (ft)	19		23.27		25		24		21		19.33	
Tabular Requirement (ft)	6.20		14.30		7.75		7.50		13.05		6.30	
Adjustments: Exposure	B	1.00	B	1.00	B	1.00	B	1.00	B	1.00	B	1.00
Adjustments: Eave-to-Ridge Ht. (ft)	12.00	1.06	12.00	1.06	12.00	1.06	12.00	1.06	12.00	1.06	12.00	1.06
Adjustments: Max. Wall Ht. (ft)	10.00	1.00	10.00	1.00	10.00	1.00	10.00	1.00	10.00	1.00	10.00	1.00
Adjustments: No. of BWLs	3	1.30	3	1.30	3	1.30	3	1.30	3	1.30	3	1.30
Adjustments: Omit Interior Finish?	No	1.00	No	1.00	No	1.00	No	1.00	No	1.00	No	1.00
Adjustments: Added Hold-downs?	No	1.00	No	1.00	No	1.00	No	1.00	No	1.00	No	1.00
Adjustments: Joints Blocked?	Yes	1.00	Yes	1.00	Yes	1.00	Yes	1.00	Yes	1.00	Yes	1.00
Adjustments: Fasteners @ 4" o.c.?	No	1.00	No	1.00	Yes	0.83	No	1.00	Yes	0.70	No	1.00
Required BWP Length (ft)	8.54		19.70		8.86		10.34		12.59		8.68	
Actual BWPs: Contributing Length (ft) — W3/P=actual; SF8=actual; GB(ss)=0.5actual; GB(ds)=actual; CS-PF=1.5actual; PF3=1.5actual; PF=actual; AB/W=4' — BWP	Method	Length	Method	Length	Method	Length	Method	Length	Method	Length	Method	Length
1	CS-WSP	3.75	GB (ds)	8.00	CS-WSP	4.50	CS-WSP	2.33	CS-PF	2.00	CS-WSP	4.58
2	CS-WSP	4.00	GB (ds)	8.00	CS-WSP	4.50	CS-WSP	4.00	GB (ss)	5.50	CS-WSP	4.58
3	CS-WSP	4.00	WSP	4.00			CS-WSP	4.00	CS-PF	2.16		
4	CS-WSP	4.00					CS-WSP	4.00	CS-PF	2.58		
5	CS-WSP	4.00					CS-PF	1.75	CS-WSP	2.66		
6												
7												
Actual BWP Length (ft)	19.75		20.00		9.00		16.08		14.90		9.16	
Actual ≥ Required?	PASS		PASS		PASS		PASS		PASS		PASS	
BWPs ≤ 20' Apart?	Yes		Yes		Yes		Yes		Yes		Yes	
≥ 2 Panels in BWL?	Yes		Yes		Yes		Yes		Yes		Yes	
BWP 10' from Ends?	Yes		Yes		Yes		Yes		Yes		Yes	
Continuous Sheathing	End 1	End 2	End 1	End 2	End 1	End 2	End 1	End 2	End 1	End 2	End 1	End 2
End Conditions	1	1	1	1	1	1	1	1	1	1	1	1
BWL Compliance	PASS		PASS		PASS		PASS		PASS		PASS	

WALL BRACING/SHEAR WALL SCHEDULE

MARK	DESCRIPTION	FASTENING PATTERN
CS-PF	7/16" APA RATED OSB SHEATHING	8d COMMON NAILS (2 1/2" x 0.131") @ 6" O.C. ON EDGES & 12" O.C. IN-FIELD
CS-WSP	7/16" APA RATED OSB SHEATHING	8d COMMON NAILS (2 1/2" x 0.131") @ 6" O.C. ON EDGES & 12" O.C. IN-FIELD
GB (BOTH SIDES)	1/2" GYPSUM WALL BOARD SHEATHING	1 1/2 " GALVANIZED ROOFING NAILS OR 1 1/2" GALVANIZED STAPLES OR 1 1/4" SCREWS TYPE W OR S @ 7" O.C. ON EDGES & IN-FIELD
GB (ONE SIDE)	1/2" GYPSUM WALL BOARD SHEATHING	1 1/2 " GALVANIZED ROOFING NAILS OR 1 1/2" GALVANIZED STAPLES OR 1 1/4" SCREWS TYPE W OR S @ 7" O.C. ON EDGES & IN-FIELD
WSP	7/16" APA RATED OSB SHEATHING	8d COMMON NAILS (2 1/2" x 0.131") @ 6" O.C. ON EDGES & 12" O.C. IN-FIELD

© COPYRIGHT 2016
Structural Engineering content of this drawings are property of structBIM LLC and are issued for this project only. Any re-use or re-production of these drawings shall not be done without written consent of structBIM LLC. These drawings are to be read in conjuction with project specifications and drawings from other consultants. These drawings shall not be used as shop drawings. Do not scale drawings, use dimensions as specified.

GTM ARCHITECTS
7735 OLD GEORGETOWN ROAD
SUITE 700
BETHESDA, MD 20814
(240)333-2000
(240)333-2001 FAX
WWW.GTMARCHITECTS.COM
GTM

Seal

STATE OF MARYLAND — MICHAEL KANE — 40082 — PROFESSIONAL ENGINEER

Consultant

structBIM ENGINEERS
WE DESIGN....WE BIM
46400 BENEDICT DR, SUITE #211
PHONE: 703-657-4481
E-MAIL: info@structBIM.com

Project

23 HIGH STREET, LOT 2,
BROOKVILLE, MD

I certify that these documents were prepared or approved by me, and that I am a duly licensed Professional Engineer under the laws of the State of Maryland, license number 40082, Expiration Date: 02-13-2023.

Issue Description	*Date*

structBIM Project No.	21-0244
Checked By	KK
Drawn By	KK
Scale	1/4" = 1'-0"

Sheet Title
FIRST FLOOR WALL
BRACING PLAN

Sheet No.

SWB1

COPYRIGHT, 2016 structBIMEngineers, LLC.
PLOTTED ON: 4/15/2022 3:02:14 PM

FILE NAME:

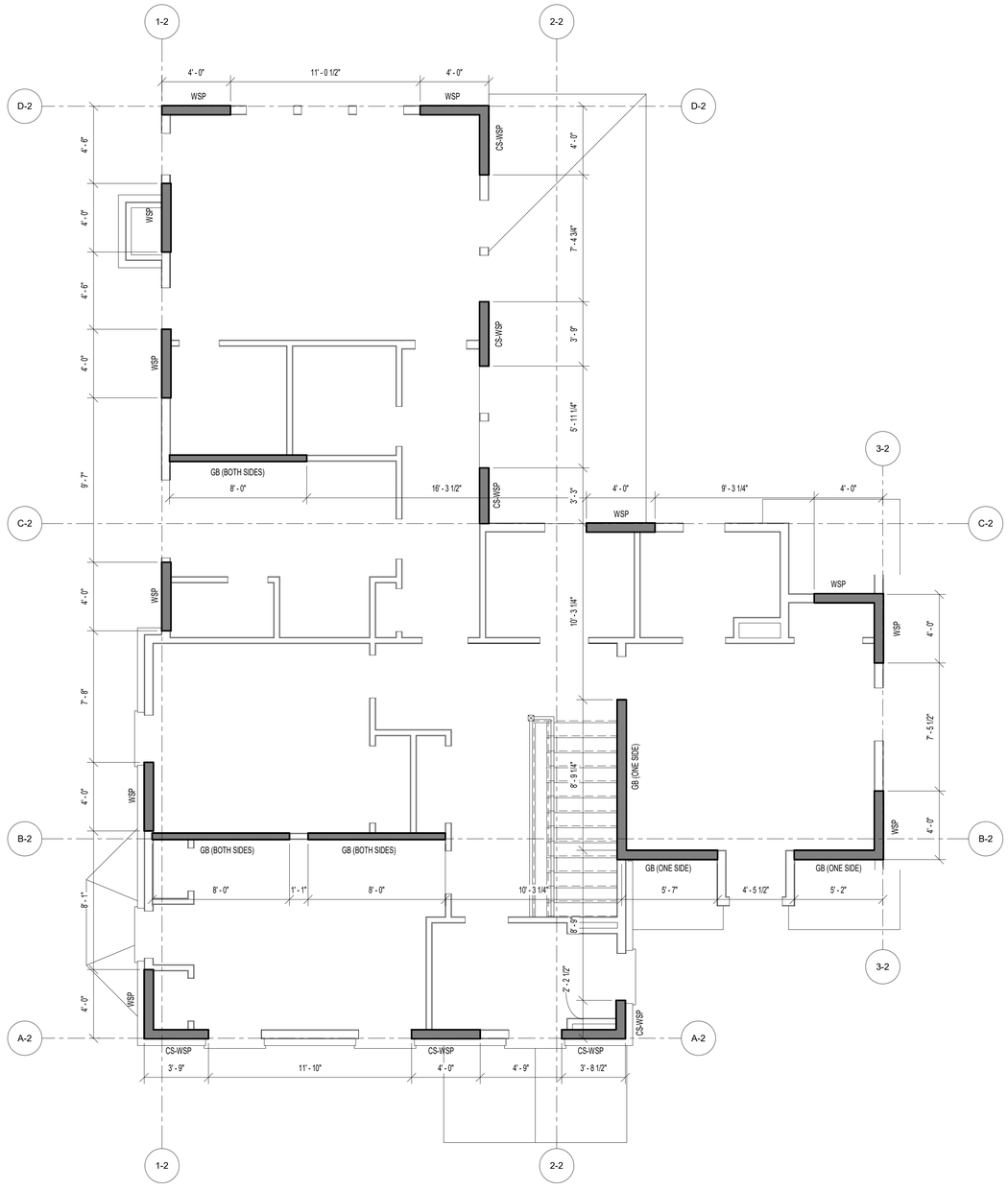

1 SWB2 SECOND FLOOR WALL BRACING PLAN
SCALE: 1/4" = 1'-0"

REVIEWED
By Michael Kyne at 2:05 pm, May 23, 2022

APPROVED
Montgomery County
Historic Preservation Commission

PLAN LEGENDS & SYMBOLS:

- INDICATES BEARING WALL
- INDICATES DRAIN HOLE FROM ABOVE
- INDICATES JOIST/TRUSS HANEGR (REFER TO SHOP DWGS)
- INDICATES FRAMING DIRECTION
- INDICATES REBAR DIRECTION
- (_J+_S) — INDICATES NO. OF KING STUDS AT EACH END; INDICATES NO. OF JACK STUDS AT EACH END
- WF?? — INDICATES WALL FOOTING; WIDTH OF WALL FOOTING IN INCHES
- TS?? — INDICATES THICKENED SLAB; WIDTH OF THICKENED SLAB IN INCHES
- Fx.x — INDICATES ISOLATED COLUMN FOOTING; INDICATES SIZE OF FOOTING IN DECIMAL FEET
- ML?? — MICROLAM LVL 2.0E; DEPTH OF MICROLAM LVL IN INCHES
- LSL?? — LAMINATED STRAND LUMBER 1.7E; DEPTH OF TIMBERSTAND LSL BEAM IN INCHES
- PSL?? — PARALLAM STRAND LUMBER 2.0E; WIDTHxDEPTH OF MEMBER
- CC — COLUMN CAP
- CB — COLUMN BASE
- HD — HOLD DOWN ANCHOR
- MS — METAL STRAP
- H — JOIST/TRUSS/BEAM HANGER
- HC — HURRICANE CLIPS

Ultimate Wind Speed (mph)	115															
BWL Designation	A-2		B-2		C-2		D-2		1-2		2-2		3-2			
No. of Floors above BWL	0		0		0		0		0		0		0			
BWP Method	CS-WSP		GB		GB		WSP		WSP		GB		WSP			
Average BWL Spacing (ft)	11.58		16.5		22.25		24.33		23		23		19			
Tabular Requirement (ft)	2.24		5.45		7.18		4.37		4.10		7.40		3.35			
Adjustments: Exposure	B	1.00	B	1.00	B	1.00	B	1.00	B	1.00	B	1.00	B	1.00		
Adjustments: Eave-to-Ridge Ht. (ft)	12.00	1.12	12.00	1.12	12.00	1.12	12.00	1.12	12.00	1.12	12.00	1.12	12.00	1.12		
Adjustments: Max. Wall Ht. (ft)	9.00	0.95	9.00	0.95	9.00	0.95	9.00	0.95	9.00	0.95	9.00	0.95	9.00	0.95		
Adjustments: No. of BWLs	4	1.45	4	1.45	4	1.45	4	1.45	3	1.30	3	1.30	3	1.30		
Adjustments: Omit Interior Finish?	No	1.00	No	1.00	No	1.00	No	1.00	No	1.00	No	1.00	No	1.00		
Adjustments: Added Hold-downs?	No	1.00	No	1.00	No	1.00	No	1.00	No	1.00	No	1.00	No	1.00		
Adjustments: Joints Blocked?	Yes	1.00	Yes	1.00	Yes	1.00	Yes	1.00	Yes	1.00	Yes	1.00	Yes	1.00		
Adjustments: Fasteners @ 4" o.c.?	No	1.00	No	1.00	No	1.00	No	1.00	No	1.00	No	1.00	No	1.00		
Required BWP Length (ft)	3.45		8.41		11.07		6.74		5.67		10.24		4.63			
Actual BWPs: BWP	Method	Length	Method	Length	Method	Length	Method	Length	Method	Length	Method	Length	Method	Length		
Contributing Length (ft) 1	CS-WSP	3.75	GB (ds)	8.00	GB (ds)	8.00	WSP	4.00	WSP	4.00	CS-WSP	2.25	WSP	4.00		
2	CS-WSP	4.00	GB (ds)	8.00	WSP	4.00	WSP	4.00	WSP	4.00	GB (ss)	4.25	WSP	4.00		
WSP=actual SPB=actual GB(ss)=0.5actual GB(ds)=actual CS-PF=1.5actual PF(ds)=1.5actual PF=actual ABW=4' 3	CS-WSP	3.75	GB (ss)	2.50	WSP	4.00			WSP	4.00	CS-WSP	3.25				
4			GB (ss)	2.75					WSP	4.00	CS-WSP	3.25				
5									WSP	4.00	CS-WSP	4.00				
6																
7																
Actual BWP Length (ft)	11.50		21.25		16.00		8.00		20.00		17.00		8.00			
Actual ≥ Required?	PASS		PASS		PASS		PASS		PASS		PASS		PASS			
BWPs ≤ 20' Apart?	Yes		Yes		Yes		Yes		Yes		Yes		Yes			
≥ 2 Panels in BWL?	Yes		Yes		Yes		Yes		Yes		Yes		Yes			
BWP 10' from Ends?	Yes		Yes		Yes		Yes		Yes		Yes		Yes			
Continuous Sheathing End Conditions	End 1	End 2	End 1	End 2	End 1	End 2	End 1	End 2	End 1	End 2	End 1	End 2	End 1	End 2		
	1	1	1	1	1	1	1	1	1	1	1	1	1	1		
BWL Compliance	PASS		PASS		PASS		PASS		PASS		PASS		PASS			

WALL BRACING/SHEAR WALL SCHEDULE

MARK	DESCRIPTION	FASTENING PATTERN
CS-PF	7/16" APA RATED OSB SHEATHING	8d COMMON NAILS (2 1/2" x 0.131") @ 6" O.C. ON EDGES & 12" O.C. IN-FIELD
CS-WSP	7/16" APA RATED OSB SHEATHING	8d COMMON NAILS (2 1/2" x 0.131") @ 6" O.C. ON EDGES & 12" O.C. IN-FIELD
GB (BOTH SIDES)	1/2" GYPSUM WALL BOARD SHEATHING	1 1/2 " GALVANIZED ROOFING NAILS OR 1 1/2" GALVANIZED STAPLES OR 1 1/4" SCREWS TYPE W OR S @ 7" O.C. ON EDGES & IN-FIELD
GB (ONE SIDE)	1/2" GYPSUM WALL BOARD SHEATHING	1 1/2 " GALVANIZED ROOFING NAILS OR 1 1/2" GALVANIZED STAPLES OR 1 1/4" SCREWS TYPE W OR S @ 7" O.C. ON EDGES & IN-FIELD
WSP	7/16" APA RATED OSB SHEATHING	8d COMMON NAILS (2 1/2" x 0.131") @ 6" O.C. ON EDGES & 12" O.C. IN-FIELD

© COPYRIGHT 2016
Structural Engineering content of this drawings are property of structBIM LLC and are issued for this project only. Any re-use or re-production of these drawings shall not be done without written consent of structBIM LLC. These drawings are to be read in conjuction with project specifications and drawings from other consultants. These drawings shall not be used as shop drawings. Do not scale drawings, use dimensions as specified.

GTM ARCHITECTS

7735 OLD GEORGETOWN ROAD
SUITE 700
BETHESDA, MD 20814
(240)333-2000
(240)333-2001 FAX
WWW.GTMARCHITECTS.COM

GTM

Seal

STATE OF MARYLAND — KEVIN M. KANE — 40082 — PROFESSIONAL ENGINEER

Consultant

structBIM ENGINEERS
WE DESIGN....WE BIM
46400 BENEDICT DR, SUITE #211
PHONE: 703-657-4481
E-MAIL: info@structBIM.com

Project

23 HIGH STREET, LOT 2,
BROOKVILLE, MD

I certify that these documents were prepared or approved by me, and that I am a duly licensed Professional Engineer under the laws of the State of Maryland, license number 40082, Expiration Date: 02-13-2023.

Issue Description	*Date*

structBIM Project No.	21-0244
Checked By	KK
Drawn By	KK
Scale	1/4" = 1'-0"

Sheet Title
SECOND FLOOR WALL BRACING PLAN

Sheet No.

SWB2

COPYRIGHT, 2016 structBIMEngineers, LLC.
PLOTTED ON: 4/18/2022 3:02:10 PM

FILE NAME:

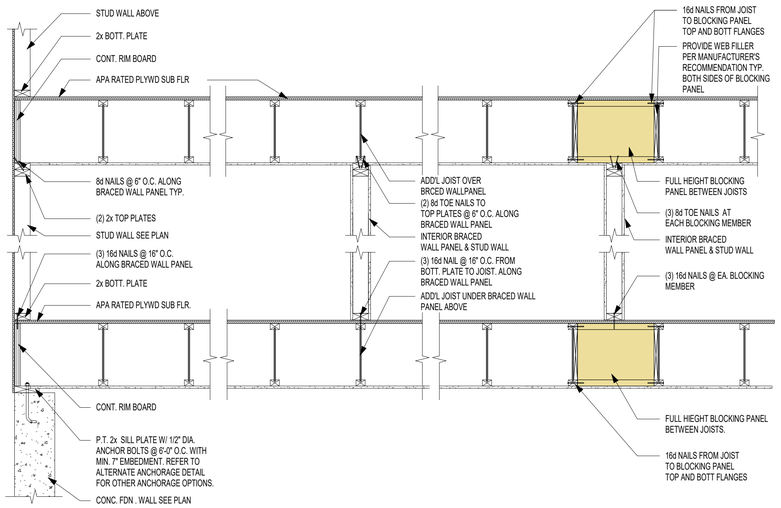

3 / SWB3 BRACED WALL PANEL PARALLEL TO I-JOISTS
SCALE: 3/4" = 1'-0"

WALL BRACING/SHEAR WALL SCHEDULE		
MARK	**DESCRIPTION**	**FASTENING PATTERN**
CS-PF	7/16" APA RATED OSB SHEATHING	8d COMMON NAILS (2 1/2" x 0.131") @ 6" O.C. ON EDGES & 12" O.C. IN-FIELD
CS-WSP	7/16" APA RATED OSB SHEATHING	8d COMMON NAILS (2 1/2" x 0.131") @ 6" O.C. ON EDGES & 12" O.C. IN-FIELD
GB (BOTH SIDES)	1/2" GYPSUM WALL BOARD SHEATHING	1 1/2 " GALVANIZED ROOFING NAILS OR 1 1/2" GALVANIZED STAPLES OR 1 1/4" SCREWS TYPE W OR S @ 7" O.C. ON EDGES & IN-FIELD
GB (ONE SIDE)	1/2" GYPSUM WALL BOARD SHEATHING	1 1/2 " GALVANIZED ROOFING NAILS OR 1 1/2" GALVANIZED STAPLES OR 1 1/4" SCREWS TYPE W OR S @ 7" O.C. ON EDGES & IN-FIELD
WSP	7/16" APA RATED OSB SHEATHING	8d COMMON NAILS (2 1/2" x 0.131") @ 6" O.C. ON EDGES & 12" O.C. IN-FIELD

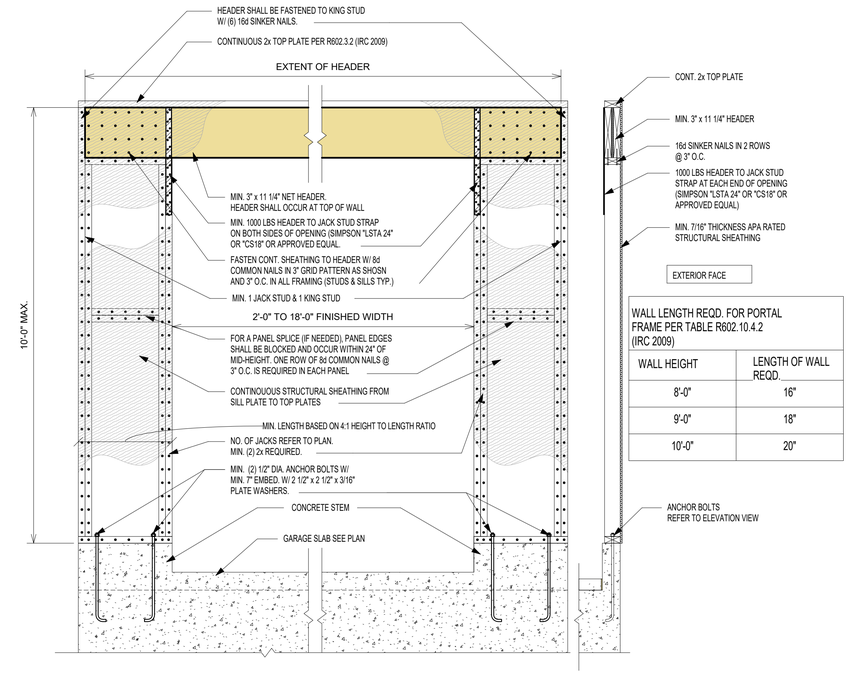

WALL LENGTH REQD. FOR PORTAL FRAME PER TABLE R602.10.4.2 (IRC 2009)	
WALL HEIGHT	LENGTH OF WALL REQD.
8'-0"	16"
9'-0"	18"
10'-0"	20"

ELEVATION VIEW

SECTION VIEW

1 / SWB3 PORTAL FRAME @ GARAGE (PFG) LEFT SIDE ONLY
SCALE: 3/4" = 1'-0"

REVIEWED
By Michael Kyne at 2:05 pm, May 23, 2022

APPROVED
Montgomery County
Historic Preservation Commission

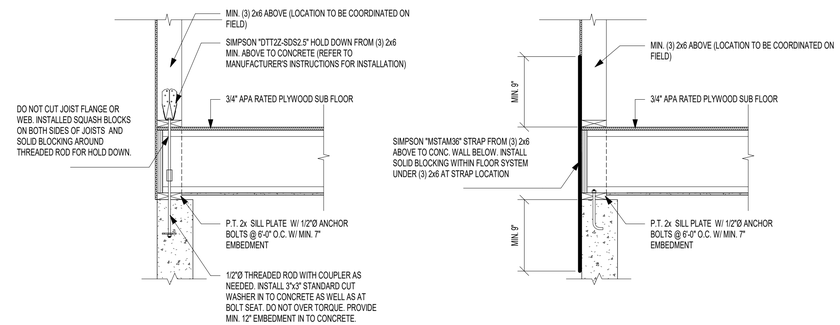

HOLD DOWN OPTION WITH SIMPSON "DTT2Z"

HOLD DOWN OPTION WITH SIMPSON "MSTAM36"

2 / SWB3 TYP. HOLD DOWN DETAILS (APPLY AT CORNERS < 24")
SCALE: 3/4" = 1'-0"

© COPYRIGHT 2016
Structural Engineering content of this drawings are property of structBIM LLC and are issued for this project only. Any re-use or re-production of these drawings shall not be done without written consent of structBIM LLC. These drawings are to be read in conjuction with project specifications and drawings from other consultants. These drawings shall not be used as shop drawings. Do not scale drawings, use dimensions as specified.

GTM ARCHITECTS
7735 OLD GEORGETOWN ROAD
SUITE 700
BETHESDA, MD 20814
(240)333-2000
(240)333-2001 FAX
WWW.GTMARCHITECTS.COM
GTM

Seal

STATE OF MARYLAND · KYNE · 40082 · PROFESSIONAL ENGINEER

Consultant

structBIM ENGINEERS
WE DESIGN....WE BIM
46400 BENEDICT DR, SUITE #211
PHONE: 703-657-4481
E-MAIL: info@structBIM.com

Project

23 HIGH STREET, LOT 2,
BROOKVILLE, MD

I certify that these documents were prepared or approved by me, and that I am a duly licensed Professional Engineer under the laws of the State of Maryland, license number 40082, Expiration Date: 02-13-2023.

N

Issue Description	*Date*

structBIM Project No.	21-0244
Checked By	KK
Drawn By	KK
Scale	3/4" = 1'-0"

Sheet Title
WALL BRACING DETAILS & SCHEDULE

Sheet No.

SWB3

COPYRIGHT, 2016 structBIMEngineers, LLC.
PLOTTED ON: 4/19/2022 3:02:31 PM

FILE NAME:

21 HIGH STREET, LOT 3
BROOKEVILLE, MD 20833

PLAT DATA

LOT 3
ADDITION TO BROOK GROVE
OLNEY 8TH ELECTION DISTRICT
MONTGOMERY COUNTY, MD

TOWN OF BROOKEVILLE
ZONED:HISTORIC VILLAGE RESIDENTIAL

FRONT SETBACK= 15'
SIDE SETBACKS= 8'
REAR SETBACK= 40'

15,000 SF (0.344 ACRES)

BUILDING TO BE FULLY SPRINKLERED IN ACCORDANCE WITH 2018 IRC & NFPA13D

GRAPHIC SYMBOLS

- A / A-5 — SECTION SHEET NO.
- A / A-5 — SECTIONAL DETAIL SHEET NO.
- A / A-5 — DETAIL TARGET, ENLARGEMENT SHEET NO.
- N / A-12 — EXTERIOR ELEVATION SHEET NO.
- N / W 2 A-12 E / S — INTERIOR ELEVATION SYMBOL DRAWING NO. SHEET NO.
- ELEV. 42.00 — DATUM ELEVATION
- 106 — ROOM NUMBER
- 4 — DOOR NUMBER
- W1 — WINDOW TYPE
- SF1 / A-6 — STOREFRONT ELEVATION
- 1 — REVISION NUMBER
- P1 — PARTITION TYPES SEE SCHEDULE
- T — TEMPERED GLASS

LIST OF DRAWINGS

001	COVER SHEET
002	SPECIFICATIONS
003	STUCCO SPECIFICATIONS
004	DOOR & WINDOW SCHEDULES
EC001	THERMAL ENVELOPE
EC002	THERMAL ENVELOPE
EC003	ENERGY CALCULATIONS
SITE	BUILDING PERMIT SITE PLAN
A100	BASEMENT PLAN
A101	FIRST FLOOR PLAN
A102	SECOND FLOOR PLAN
A103	ATTIC PLAN
A104	ROOF PLAN
A200	FRONT ELEVATION
A201	RIGHT SIDE ELEVATION
A202	REAR ELEVATION
A203	LEFT SIDE ELEVATION
A300	BUILDING SECTIONS
A301	BUILDING SECTIONS
A302	DETAILS
A303	DETAILS
A304	DETAILS
A305	DETAILS
A700	GARAGE PLANS
A701	GARAGE ELEVATIONS
A702	GARAGE SECTIONS & DETAILS
S0	FOUNDATION PLAN
S1	FIRST FLOOR FRAMING PLAN
S2	SECOND FLOOR FRAMING PLAN
S3	LOFT FLOOR FRAMING PLAN
S4	ROOF FRAMING PLAN
SD0	FOUNDATION DETAILS
SD0.1	FOUNDATION DETAILS
SD1	FRAMING DETAILS
SD2	FRAMING DETAILS
SD3	FRAMING DETAILS
SG	GENERAL NOTES
SWB1	FIRST FLOOR WALL BRACING PLAN
SWB2	SECOND FLOOR WALL BRACING PLAN
SWB3	WALL BRACING DETAILS & SCHEDULE

CALCULATIONS

BASEMENT:	
FINISHED:	1,252 SF
UNFINISHED:	132 SF
TOTAL:	1,384 SF
FIRST FLOOR:	1,514.3 SF
FRONT PORCH:	237.3 SF
REAR PORCH:	270 SF
SECOND FLOOR:	1,386.6 SF
ATTIC:	651.4 SF
DETACHED GARAGE:	360 SF
SIDE PORCH:	232 SF
TOTAL GFA:	6,035.6 SF
HOUSE FOOTPRINT:	2,021.6 SF

LOT COVERAGE:

MONTGOMERY COUNTY
LOT= 15,000 SF
15,000 SF- 6,000 SF= 9,000 SF
9,000 SF x .001= 9.0%
30%- 9%= 21% MAX COVERAGE (3,150 SF)
1,874.3 SF/ 15,000 SF= 12.5%

MATERIAL SYMBOLS

EARTH, CONCRETE, STEEL, BRICK, FINISH WOOD, CONCRETE MASONRY UNIT, ROUGH LUMBER BLOCKING, GYPSUM SHEATHING, SLAT BOARD, ACOUSTICAL TILE

ABBREVIATIONS

ABOVE FINISH FLOOR	AFF	EACH	EA	INTERIOR	INT	PLATE	PL	VERTICAL	VERT
ACOUSTIC	ACST	EAST	E			PLUMBING	PLMB	VESTIBULE	VEST
ADJUSTABLE	ADJ	ELECTRIC, ELECTRICAL	ELEC	JANITOR'S CLOSET	JC	PLYWOOD	PLYWD	VINYL COMPOSITE TILE	VCT
AIR CONDITIONING	A/C	ELEVATION	EL	JOINT	JT	POLYVINYL CHLORIDE	PVC	VOLTS	V
AIR HANDLING	AH	ELEVATOR	ELEV	JOIST	JST	POUND	LB		
AIR HANDLING UNIT	AHU	EMERGENCY POWER	EM	JUNCTION BOX	JB	POUNDS PER SQUARE INCH	PSI	WALLBOARD	WB
ALTERNATE	ALT	EMPTY CONDUIT	EC			PREFABRICATED	PREFAB	WELDED WIRE FABRIC	WWF
ALTERNATE CURRENT	AC	ENGINEER	ENGR	LAMINATED	LAM	PREFINISHED	PREFIN	WIDTH	W
ALUMINUM	AL	ELECTRIC WATER COOLER	EWC	LAVATORY	LAV	PRELIMINARY	PRELIM	WINDOW	WDW
AMPERES	AMP	EXHAUST	EXH	LEFT HAND	LH			WITH	W/
ANCHOR BOLT	AB	EXISTING	EX	LENGTH	L	QUARRY TILE	QT	WITHOUT	W/O
ARCHITECT	ARCH	EXPANSION	EXP	LIBRARY	LIB			WOOD	WD
AT	@	EXPANSION JOINT	EXP JT	LINEAR FEET	LF	RADIUS	RAD, R		
AVERAGE	AVG	EXTERIOR	EXT	LONG LEG HORIZONTAL	LLH	REFRIGERATOR	REF	YARD	YD
				LONG LEG VERTICAL	LLV	REINFORCING	REINF		
BEAM	BM	FAHRENHEIT	F			REQUIRED	REQD		
BOARD	BD	FEET PER MINUTE	FPM	MAINTENANCE	MAINT	RESILIENT	RES		
		FEET, FOOT	FT	MANUFACTURER	MFR	RETURN AIR	RA		
CABINET	CAB	FINISH	FIN	MASONRY	MAS	REVISION	REV		
CATALOG	CAT	FIRE EXTINGUISHER CAB.	FEC	MASONRY OPENING	MO	RIGHT HAND	RH		
CEILING	CLG	FLOOR	FL	MAXIMUM	MAX	ROOM	RM		
CENTERLINE	CL	FLUORESCENT	FLOUR	MECHANICAL	MECH	ROUGH OPENING	RO		
CERAMIC TILE	CT	FIRE RATED	FR	MEDIUM	MED				
CLOSET	CLO			MEZZANINE	MEZZ	SCHEDULE	SCHD		
COLUMN	COL	GAUGE	GA	MINIMUM	MIN	SECTION	SECT		
COMPANY	CO	GALLON	GAL	MISCELLANEOUS	MISC	SERVICE SINK	SS		
CONCRETE	CONC	GALLONS PER MINUTE	GPM	MOUNTED	MTD	SIMILAR	SIM		
CONCRETE MASONRY UNITS	CMU	GALVANIZED	GALV	MULLION	MUL	SOUND TRANSMISSION	STM		
CONFERENCE	CONF	GENERAL CONTRACTOR	GC			SPECIFICATION	SPEC		
CONTINUOUS	CONT	GROUNDED FAULT INTERUPT.	GFI	NOT IN CONTRACT	NIC	SQUARE	SQ		
CONTROL JOINT	CJ	GYPSUM	GYP	NOT TO SCALE	NTS	STANDARD	STD		
COORDINATE	COORD	GYPSUM WALLBOARD	GWB	NUMBER	# NO	STAND PIPE	ST		
CORRIDOR	CORR					STAINLESS STEEL	SS		
CUBIC FEET	CF	HANDICAPPED	HDCP	OFFICE	OFF	STATION	STA		
CUBIC FEET PER MINUTE	CFM	HARDWARE	HDW	ON CENTER	OC	STEEL	STL		
		HARDWOOD	HDWD	OPENING	OPNG	STORAGE	STOR		
DEDICATED	DED	HEIGHT	HGT, H	OPPOSITE	OPP	STRUCTURAL	STRUCT		
DEPARTMENT	DEPT	HERTZ	HZ	OUNCE	OZ	SUSPENDED CEILING	SUSP		
DEPTH	D	HOLLOW METAL	HM	OVERALL	OA				
DETAIL	DET	HORIZONTAL	HORIZ	OVERHEAD	OH	TELEPHONE	TEL		
DIAGONAL	DIAG	HORSE POWER	HP			THICK OR THICKNESS	THK		
DIAMETER	DIA	HOT WATER HEATER	HWH	PAINTED	PTD	THRESHOLD	THRSLD		
DIMENSION	DIM	HOUR	HR	PANEL	PNL	TILE	T		
DISHWASHER	DW			PARTITION	PTN	TO BE SELECTED	TBS		
DOOR	DR	INCH	IN	PERPENDICULAR	PERP	TONGUE & GROOVE	T & G		
DOWN	DN	INFORMATION	INFO	PERSONAL COMPUTER	PC	TOP	T		
DRAWING	DWG	INSIDE DIAMETER	ID	PHASE	PH	TYPICAL	TYP		
DRINKING FOUNTAIN	DF	INSULATED, INSULATION	INSUL	PLASTIC LAMINATE	P LAM				

PROJECT INFORMATION

CLIENT/CONTRACTOR
PHIL SARDELIS
10776 TUCKER STREET
BELTSVILLE, MD 20705
240-417-5333
philsardelis@gmail.com

ARCHITECT
GTM ARCHITECTS
CONTACT: LUKE OLSON/DOUGLAS ROBERTS
7735 OLD GEORGETOWN ROAD
BETHESDA, MD 20814
(240) 333-2021
(240) 333-2070 FAX
lolson@gtmarchitects.com

CIVIL ENGINEER
CAS ENGINEERING
CONTACT: JARED SIMS CARHART, PD, MSE
10 SOUTH BENTZ STREET
FREDERICK, MD 21701
301-703-2346 (O)
303-217-1152 (C)
jcarhart@casengineering.com

STRUCTURAL ENGINEER
structBIM ENGINEERS
CONTACT: KAUSHAL KANSARA, P.E.
20130 LAKEVIEW CTR. PLZ.
SUITE 400
ASHBURN, VA 20147
(703) 405-9732 (C)
kaushal@structbim.com

PLANS PREPARED BASED ON THE FOLLOWING CODES:
INTERNATIONAL RESIDENTIAL CODE 2018

GTM ARCHITECTS
7735 OLD GEORGETOWN ROAD
SUITE 700
BETHESDA, MD 20814
(240)333-2000
(240)333-2001 FAX
WWW.GTMARCHITECTS.COM

Seal

I certify that these documents were prepared or approved by me, and that I am a duly licensed architect under the laws of the State of Maryland. License number 8888, Expiration Date: 10.06.2022.

Consultant

Project
21 HIGH STREET
LOT 3

Owner

Developer

PERMIT SET	4-11-2022
Issue Description	Date

GTM Project No.	18.0320
Checked By	GTM
Drawn By	LEO/DER
Scale	AS NOTED

Sheet Title
COVER SHEET

Sheet No.
001

COPYRIGHT, 2022 GTM ARCHITECTS, INC.

SPECIFICATIONS FOR RESIDENTIAL CONSTRUCTION

The purpose of the following specifications is to establish the level of quality required for both materials and workmanship. These notes are intended as a general outline; specific and additional requirements are indicated on the drawings. Unless noted otherwise in the contract documents, all Products and Materials shall be installed in strict compliance with the manufacturer's recommendations. The contractor should also note that not all of the items mentioned below may apply to the project.

GENERAL REQUIREMENTS

1. All work shall conform to the International Residential Code (IRC), 2018 edition and all applicable sections of the Montgomery County code for single family construction and applicable building codes including (but not limited to) IECC 2018.
2. The General Contractor shall stake off area of new construction and designate trees and shrubs for removal as required. Protect all landscaping beyond the areas of construction.
3. The General Contractor shall coordinate phasing and time limits for new construction with the Owner, so as to establish an acceptable payment schedule related to the status of the project.
4. Any permits required for the project shall be obtained by the General Contractor, unless informed otherwise by the Architect that the permit has been obtained.
5. The General Contractor shall store materials and equipment in a safe and suitable place during the construction process. The Owner is not responsible for any losses of material. The contractor shall be responsible for damage to installed and (or) stored materials until substantial completion or as otherwise noted in the contract document.
6. All debris shall be periodically removed from the site so as to not create a physical or visual hazard to the Owner.
7. The General Contractor shall be licensed in Montgomery County, Maryland, and shall guarantee the project labor and materials for a period of one year after the Architect determines the work to be substantially complete, as per county laws.
8. The General Contractor shall provide competent daily supervision of the project.
9. The General Contractor shall notify the related authorities for inspection of the work as related to the specific areas required by the county.
10. The General Contractor shall Carry Workmen's Compensation Insurance for every person employed by him on the premises and shall maintain such insurance in full force during the entire time of this contract. The General Contractor shall carry Comprehensive General and Automotive Liability Insurance of $25,000 to $50,000 minimum. These requirements can be amended by the Owner if specified by the contract.
11. All drawings, specifications, and copies furnished by the Architect are the documents for the construction of this project only and shall not be used in any other circumstance.
12. The General Contractor shall carefully study the contract documents and report to the Architect any error, omission, or inconsistency they may discover.
13. The General Contractor shall provide and pay for all labor, materials, equipment, tools, machinery and other facilities and services necessary for proper execution and completion of the work, and shall guarantee no mechanic liens against the project at completion.
14. The Contract Sum is stated in the agreement and is the total amount payable by the Owner, which designates the addition, deletion, or revision to the contract. The Change Order must also designate the change in the original contract sum.
15. At least seven days before the date of each progress payment established by the agreement, the General Contractor shall submit to the Architect and Owner an itemized application designating which portion of the work has been completed.
16. The Contractor shall verify dimensions prior to construction, and all discrepancies shall be brought to the attention of the Architect so that clarifications can be made. The Contractor shall field verify all dimensions related to existing conditions. Written dimensions take precedence over scaled sizes. Do not scale drawings to determine missing dimensions.
17. The Contractor shall be responsible to have new utility line services (gas, electric, telephone) installed to the house connection/meter location.

DEMOLITION NOTES

1. Every care shall be taken during demolition to protect the house by means of temporary supports and braces as necessary to prevent any structural failure during removal and replacement of existing structural members.
2. Temporary walls and dust barriers shall be installed as necessary to prevent circulation of dirt and dust into portions of the house that are not part of the work.
3. All dashed walls, fixtures, windows, etc., are to be removed. See Demolition Sheets for additional information.
4. Conduct all demolition operations in compliance with applicable codes and ordinances.
5. Coordinate demolition with work of subcontractors.
6. Maintain the existing structure in a watertight condition at all times.
7. Provide the necessary enclosures to allow the owner to maintain comfortable temperatures within the occupied portions of the home during construction.

GENERAL STRUCTURAL NOTES

1. Work shall be done in accordance with the International Residential Code (IRC), 2018 Edition.
2. The design gravity live loads are as follows:
   - Roof load (snow): 30 LL + 15 DL = 45 PSF
   - Living Spaces: (1st Floor) 40 LL + 15 DL = 55 PSF
   - Sleeping Spaces: (2nd Floor) 30 LL + 15 DL = 45 PSF
   - Exterior Decks: 60 LL + 15 DL = 75 PSF
   - Live Load Deflection Limitation for floors and stairs shall be L/360
   - Live Load Deflection Limitation for roofs shall be L/240

FOUNDATIONS

1. The foundation for the structure has been designed for the assumed bearing pressure of 1,500 PSF. This is to be verified by the contractor prior to the footings being poured. It is also assumed that there is no water condition present.
2. Basement walls have been designed for an assumed equivalent fluid pressure of 55 PSF.
3. Excavations for spread footings and continuous footings shall be cleaned and hand tamped to a uniform surface.
4. Slabs on grade shall be underlaid by a minimum of 4" of granular material having a maximum aggregate size of 1.5 inches and no more than 2% fines. Prior to placing the granular material, the floor subgrade shall be properly compacted, proofrolled, free of standing water, mud, and frozen soil. Before placement of concrete, a (min. 6 mil poly) vapor barrier shall be placed on top of the granular fill and sealed to vertical foundation walls.
5. Bottoms of all exterior footings shall be 2'-6" minimum below finished grade. Footings shall project a minimum of 12" into undisturbed existing natural ground having allowable bearing capacity stated. Depths of footings subject to change if soil conditions are other than assumed.

ENERGY CONSERVATION

1. The following provisions for thermal resistance meet or exceed the requirements stipulated by the 2018 International Energy Conservation Code (IECC), climate zone 4A. These values are the minimum acceptable. See drawings for specific values required for the project.
2. Insulation

		IECC
A.	Ceiling (of uppermost story)	R-49, or R-38 continuous
B.	Vaulted Ceiling sf or 20% of total insulated ceiling area R-30 allowance	R-49 w/lesser of 500
C.	Frame walls (with storm window or double glazing)	R-20 or 13+5 (exterior)
D.	Rim Joists	Equal to wall below
E.	Floors over unheated spaces (including floor overhangs)	R-38
F.	Masonry walls (enclosed heated living areas)	R-13 or R-10 continuous
G.	Slab on grade (heated space) 24" Perimeter Insulation	R-10
H.	Windows	U-0.32 SHGC-0.40
I.	Doors	See section R402.3.4

3. Air Infiltration
   - A. Provide ¼" x 5.5" compressible sill sealer between foundation wall and all sill plates. Sill sealer shall be set such that no gaps exist at sealer butt joints.
   - B. Windows: Not exceeding three tenths (0.3) CFM of sash crack
   - C. Sliding glass doors: not exceeding three tenths (0.3) CFM per square foot of door area
   - D. Swinging doors: Not exceeding five tenths (0.5) CFM per square foot of door area. Provide 1" compressible sill sealer between foundation wall and all sill plates.
   - E. Building thermal envelopes shall be tested per IECC R402.4.1.2 and verified as having air leakage not to exceed 3 air changes per hour.
   - F. Recessed lighting in the thermal envelope shall comply with IECC R402.4.5
   - G. Systems duct and piping installation shall comply with IECC R403 including Whole-House Mechanical Ventilation system installation.

TERMITE CONTROL SOIL TREATMENT

1. Treat soil with Bayer Corporation, Premise 75, in strict accordance with manufacturer's recommendations.
2. Remove all extraneous sources of wood cellulose and other edible materials such as wood debris, tree stumps and roots, stakes, formwork, and construction waste wood from soil within and around foundations. Loosen, rake, and level soil to be treated except previously compacted areas under slabs and footings.
   - A. Slabs-on-Grade and Basement Slabs: Under ground-supported slab construction, including footings, building, slabs, and attached slabs as an overall treatment. Treat soil materials before concrete footings and slabs are placed.
   - B. Foundations: Adjacent soil including soil along the entire inside perimeter of foundation walls, along both sides of interior partition walls, around plumbing pipes and electric conduit penetrating the slab, and around interior column footers, piers, and chimney bases; also along the entire outside perimeter, from grade to bottom of footing. Avoid soil washout around footings.
   - C. Crawlspaces: Soil under and adjacent to foundations as previously indicated. Treat adjacent areas including around entrance platform, porches, and equipment bases. Apply overall treatment only where attached concrete platform and porches are on fill or ground.Crawlspaces used as plenum spaces strictly follow manufacturer's recommendedations.
   - D. Along driplines of roof overhangs without gutters.
   - E. Where condensate lines from mechanical equipment drip or drain to soil.
   - F. At plumbing penetrations through ground-supported slabs.
   - G. Other sites and locations as determined by licensed installer.

WARRANTY

Special Warranty: Manufacturer's standard form, signed by Applicator and Contractor certifying that termite control work, consisting of applied termiticide treatment, will prevent infestation of subterranean termites. If subterranean termite activity or damage is discovered during warranty period of five (5) years from Substantial Completion, re-treat soil and repair or replace damage caused by termite infestation.

CONCRETE

1. All concrete construction shall conform to the latest A.C.I. code 332 and shall comply with ACI 117, "Specifications for Tolerances for Concrete Construction and Materials" unless modified by requirements in the Contract Documents.
2. Concrete shall have natural sand fine aggregates and normal weight coarse aggregates conforming to ASTM C33, Type 1 Portland Cement conforming to ASTM 150, and shall have a minimum 28-day compressive strength (F/C) as follows:
   - F/C = 2,500 PSI for footings, interior slabs on grade (except garages) and fill in concrete blocks
   - F/C = 3,000 PSI for foundation walls exposed to weather.
   - F/C = 3,500 PSI for drives, porches, walks, steps, and garage slabs.
   - F/C = 4,000 PSI for precast concrete units.
3. All poured in place concrete exposed to weather conditions, including the garage floor, shall be air entrained by 6% of concrete volume. No calcium chloride or other admixtures shall be used except as approved in writing by the Owner.
4. Slabs on grade: except where otherwise noted, shall be min. 4" thick, reinforced with 6x6 W1.4xW1.4 WWF Lap mesh 6" in each direction. Slab shall be placed on a layer of 6 mil polyethylene, sealed to fdn. walls, over a 4" layer of washed gravel. Refer to drawings for location of thermal insulation.
5. Concrete finish: Exposed exterior steps, stoops and slabs shall first have a steel trowel finish and then a very light broom finish. Exposed interior and garage shall receive a steel trowel finish.
6. Expansion joints: Non-organic, Owner approved, expansion joint material shall be cast in place where slabs abut masonry or concrete walls to prevent bonding between the two materials.
7. Curing: Exposed concrete surfaces shall be sealed with an approved chemical curing compound within one hour of the final troweling. Curing compound label shall state that its use will not interfere with adhesion of subsequent floor finishes.
8. Reinforcing steel: Reinforcing steel for the ties shall be intermediate grade deformed billet steel conforming to ASTM spec. A615-40. All other reinforcing steel shall conform to ASTM spec. A615-60. Welded wire fabric to conform to ASTM A-185. Fabric shall be supplied in flat sheets and lapped to mesh at splices. All reinforcing shall be detailed, fabricated and installed in accordance with the latest detailing manual A.C.I. 315.
9. Reinforcement designated as "continuous" shall lap 36 bar diameters at splices unless noted otherwise.
10. Horizontal footing and walls: reinforcement shall be continuous and shall have 90 degree bends and extensions, or corner bars of equivalent size lapped 36 bar diameters, at corners and intersections.
11. Footings:
    - A. Bottom of footings shall extend a minimum of 2'-6" below any surface subject to freezing: footings shall extend at least 12" into undisturbed soil or set on controlled compacted fill. Depth of footing subject to change if soil conditions are other than assumed. Bearing value of soil is assumed to be 1,500 PSF with no water condition present. Minimum bearing value of controlled fill shall be certified by a licensed geotechnical engineer.
12. Anchor bolts: set anchor bolts or approved straps as shown. Bolts for wood sill plates shall be ½" in diameter and project 8" into concrete; set straps or bolts 12" max from end of any plate and 6'-0" max O.C. spacing, unless shown otherwise.

MASONRY

1. Brick shall conform to ASTM C-62. Mortar shall conform to federal specifications SS-C-18IE-type II. Lay brick only when outside temperature is 45° F and rising. Protect all work from cold and frost and ensure that mortar will cure without freezing. Calcium chloride and antifreeze admixture will not be acceptable.
2. Bearing steel and wood beams shall be supported on solid masonry piers as indicated. Other structural members (lintels, etc.) shall be supported on 8" of solid masonry. All beams and lintels shall have minimum horizontal bearing of 4".
3. Anchor bolts: Set anchor bolts or approved anchor straps as required. Bolts for wood sill plates shall be ½" diameter and project 16" into masonry. Set bolts or straps 12" max. from end of any plate.
4. CMU walls shall have horizontal wire joints reinforcement at 16" O.C. vertically, or as indicated.
5. Provide 4" solid masonry on all sides of joists or beams entering masonry party walls.
6. Brick Veneer:
   - A. Secure brick veneer with 16 GA hot-dipped zinc coated wall ties at 16" O.C. horizontally and vertically.
   - B. Provide flashing at first course above grade, at lintels, sills and elsewhere as shown. Provide 3/16" diameter tube weeps or cellular plastic head joint-type weeps at 24" O.C.
   - C. Provide through-wall flashing above all unsheltered openings. Flashing shall be end-dammed at all terminations.
   - D. Install high-density polyethylene or polyester cavity drainage material, equal to "mortar net," above all flashing. Material shall be sized to fill the width of the cavity.
7. Stone Veneer:
   - A. Vapor permeable weather-resistive barriers: two-ply asphalt saturated Kraft Grade D breather type sheathing paper.
     - Basis of design is FortifiberΦ / two-ply super jumbo texΦ 60 minute
     - Reference standard; federal specification W-B-790A, Type I, Grade D, Style 2
     - Moisture vapor transmission: 35 grams minimum; ASTM E 96
     - Water resistance: 150 minutes (Professional), ASTM D 779
8. C.M.U.'s to have water repellent block admixture; 'Dry-Block' by W.R. Grace recommended.
9. Exterior mortar to have water repellent admixture.
10. Unless noted otherwise, tool all joints concave.
11. Fully bed in mortar face shells and webs of first course of CMU.
12. All masonry joints shall be fully filled with mortar, including head joints.

ADHERED MASONRY VENNER

1. The adhered Masonry Veneer (AMV) system shall be installed in compliance with IRC R703.12 and ASTM C1780 "Standard Practice for Installation Methods for Cement-based Adhered Masonry Veneer" and The Masonry Veneer Manufacturers Associations (MVMA) "Installation Guide and Detailing Options for Compliance with ASTM C1780". The cladding unit manufacturers installation recommendations are also to be followed.
2. Two separate layers of Water Resistant Barrier (WRM) shall be provided over the sheating substrate.
3. Galvanized lath shall be securely fastened to the wall structure with approved fasteners. A mortar scratch coat shall fully encapsulate the lath and have a scored surface.
4. Cladding units shall be set over a fully cured mortar scratch coat. Cladding units shall be adjusted to comply with the cladding unit manufacturers recommendations and ASTM C1780. Doors and windows shall be adjusted to provide proper operation of opening.
5. Joints shall be filled with "thumb-print hard" adhesive mortar with a slightly concave profile, unless noted otherwise. Prior to joint filling a field mock-up shall be provided for color and workmanship approval.

STEEL

1. Structural steel shall conform to ASTM A36
2. Steel beams shall conform to ASTM A572 Grade 50.
3. All steel angles, lintels, beams, columns, etc. are to be shop primed with red lead or red oxide primer or approved equal. Structural steel at or below grade shall be painted with two coats on an asphaltic base paint and protected with a minimum of 2" solid masonry or concrete.
4. For all openings or recesses in brick or brick-faced masonry walls not specifically detailed, provide one steel angle for each 4" of wall thickness. Provide lintels according to the schedule below:

Lintel	Masonry Opening	Min. Bearing
L 3-1/2 X 3-1/2 X 1/4	Up to 3'-0"	4"
L 3-1/2 X 3-1/2 X 5/16	3'-1" to 4'-0"	6"
L 4 X 3-1/2 X 1/4	4'-1" to 5'-0"	6"
L 4 X 3-1/2 X 5/16	5'-1" to 6'-0"	6"
L 5 X 3-1/2 X 5/16	6'-1" to 7'-0"	8"
L 6 X 4 X 3/8	7'-1" to 8'-0"	8"

Note: For openings greater than 8'-0", consult with Architect and Engineer.

WOOD & CARPENTRY

1. Unless otherwise noted on drawings, all structural wood members shall be #2 Southern Pine or equal, with the following combination of unit stresses:

Extreme fiber stress in bending	1,200 PSI
Compression parallel to the grain	1,000 PSI
Compression perpendicular to the grain	565 PSI
Modulus of Elasticity Shear Stress	1,500,000 PSI

   Installation Tolerance; walls - a maximum out-of-plumb limit of 1/4" in 10' vertically and horizontal in-plane misalignment of 1/8" from adjacent framing shall be achieved. Plates and floors shall be installed within a 1/4" maximum tolerance for straightness relative to the intended location.
2. Manufactured joists and trusses (if shown on drawings) must be designed and certified by a licensed engineer and submitted to the Architect and local building department for approval.
3. Roof rafters and/or trusses shall be connected at each bearing point with one prefab-90 PSI galvanized rafter tie (hurricane clip) by Simpson or approved equal. Similarly, floor joists and trusses shall be connected with one prefabricated joist hanger. Each anchor shall be 18 GA minimum thick.
4. Provide double joists under all parallel partitions, at joists that support headers, and at headers that support joists. Use joist hangers where applicable.
5. All joists and rafters shall be rigidly braced at intervals not exceeding 8'-0".
6. Double studs at header bearing, double joists and rafters at all openings according to schedule below (unless noted otherwise on drawings):
   - Double 2 x 4 Up to 3'-0"
   - Double 2 x 6 Up to 4'-0"
   - Double 2 x 8 Up to 5'-0"
   - Double 2 x 10 Up to 7'-0"
   - Double 2 x 12 Up to 8'-0"

   All double headers and joists shall be joined with a minimum of two rows of 16 d nails 12" on center.
7. Provide blocking, banding, crush blocks, stiffeners, or rim joists, as required, at joist ends.
8. Floor joists shall have a minimum bearing of 2" on framed walls. All beams shall have minimum bearing of 4" bearing on all supports. Provide moisture protection to end of beams pocketed into masonry walls.
9. Wood joists, studs, and beams shall not be cut or notched unless authorized by the Architect. Drilled holes shall be centered at mid-depth of the member and the hole diameter shall not exceed ⅓ the actual depth of the member. No holes shall be drilled within 2' from the ends or within the middle ⅓ of the span. Provide 4" clear between holes.
10. Existing conditions shall be verified by the Contractor. Any existing damaged wood members shall be identified and replaced by the Contractor.
11. Contractor shall be responsible for providing necessary bracing and shoring of existing members and walls while altering the structure.
12. Provide 2x4 intermediate blocking at all bearing and non-bearing partitions.
13. All plywood shall be APA span rated. Use exterior grade plywood wherever edge of face will be exposed to weather. Interior plywood exposed to weather during construction shall be Exposure I min.
    - A. Exterior wall sheathing shall be ½" plywood unless noted otherwise.
    - B. Subflooring shall be ¾" tongue and groove plywood, glued and screwed to the floor joists as per APA recommendations.
    - C. Where spacing of roof structure members is 16" O.C., roof sheathing shall be ½" plywood (¾" where roofing is slate or tile). Where spacing of roof structure members is 24" O.C., roof sheathing shall be ⅝" plywood (¾" where roofing is slate or tile). Provide "H" clips at butt joints of roof sheathing.
14. MICRO-LAM L.V.L. (laminated veneer lumber) beams shall be manufactured by Trus Joist MacMillan or approved equal. Beams shall be installed according to manufacturer's recommendations. When fastening two or more beams together, provide a minimum of two rows of 16 d nails 12" on center.
15. TJI Floor Joists are to be manufactured by Trus Joist MacMillan or approved equal. Install per manufacturer's recommendations.
16. The following wood elements are to be pressure treated with preservative, bearing the AWPA standard use category label UC3B or UC4B (for ground contact):
    - A. Sill plates resting on concrete or masonry walls.
    - B. Sill plates resting on concrete slabs on grade.
    - C. Joists which enter concrete or masonry walls and have less than ½" clearance on tops, sides, and ends.
    - D. Sleepers resting directly on concrete slabs.
    - E. Exterior porch and deck framing, decking, and stairs.
17. Fasteners, hangers, and metal accessories used in pressure treated wood construction shall be type 304 or 316 stainless steel. Treated lumber shall not be placed in contact with aluminum flashing or other aluminum components.
18. Exterior Wood Trim:
    - A. All exterior wood trim shall be clear pine or redwood.
    - B. All trim shall be primed on 6 sides (including cut ends) prior to installation.
    - C. All outside corners shall be mitered and no end grain shall be exposed to view. No butt joints will be accepted
19. Exterior Synthetic Trim shall be "AZEK," with traditional smooth surface. Fasteners, joint cement, and installation procedures shall be in accordance with manufacturer's recommendations.
20. Siding: Refer to drawings for type specified.
    - A. Cement board shall be non-asbestos fiber-cement material complying with ASTM Standard Specification C1186 Grade II, Type A. Materials shall be equal to those manufactured by James Hardie Building Products.
    - B. Wood siding and sidewall Shingles shall be kiln dried Western Red Cedar, "Clear V.G. Heart" grade for clear and transparent stain finishes, and "A Clear" grade for semi-transparent stain or opaque finishes. Semi-transparent stain or opaque finish shall be applied in strict accordance to manufacturer's recommendations; including, but not limited to, substrate preparation and primer/sealer application to all wood surfaces (6-sides). Fasteners shall generally be type 304 stainless steel, but shall be type 316 for coastal applications. Install wood siding and shingle products over "Cedar Breather" by Benjamin Obdyke Inc. and 30# felts in accordance with manufacturer's instructions. Siding installation and finishing shall be as recommended by the Western Red Cedar Lumber Association. Siding shall be sealed prior to installation, fasteners shall be concealed where possible or arranged in a uniform pattern.
21. Coordinate all floor and wall framing with ductwork. Refer to mechanical notes.
22. Folding Attic Access Ladder shall be 22 ½" x 44" with self-trimming flange, pre-finished door panel, and gas-piston counterbalance. The door panel shall have continuous integral weatherstripping, R-10 insulation, and two key operated locking pins to draw the door tight. Ladder steps shall be pine, doweled to pine stringers. Contact Resource Conservation Technology at 410-366-1146. Additional insulation hood shall be provided to meet required insulation value per IECC R402.2.4.

DOORS AND WINDOWS

1. AWI "Custom Standard" shall apply to the workmanship, installation and finishing of wood doors and windows components.
2. The tops, bottoms, and edges of all doors shall be finished.
3. Any defects that prevent the door or window from serving its intented purpose satisfactorily shall be rejected, such as material that is crooked, warped, bowed, chatter marked, plane or tool marked, chipped, or otherwise defective.
4. Doors and windows shall be adjusted to provide proper operation of opening.

RADON DETECTION AND TREATMENT

1. The Contractor shall provide a venting system consisting of a minimum of 3" diameter ABS, PVC or equivalent gas-tight plumbing pipe inserted into the sub-slab gravel base (at all new concrete slabs). A 'T' fitting or equivalent method shall be used to ensure that the pipe opening remains with the sub-slab permeable material. The pipe shall terminate at least 12" above the high side of the roof penetration. Contractor shall coordinate location of pipe with Architect prior to installing the pipe.
2. Install, per IRC, 2018 edition, Appendix F 'Radon Control Methods.'
3. The Contractor shall provide any other measures as required by local codes.

VENTILATION

1. Where attics are indicated to be ventilated, they are to be vented in one of the following ways (refer to drawings for specifics):
   - A. Continuous ridge venting and continuous soffit venting. Ridge vent shall be by Cor-A-Vent or approved equal. Continuous screen soffit vents shall be a minimum of 2" wide. Circular louver vents between each rafter may be used at the soffit if shown on the drawings.
   - B. Screen louvers or vents with an open area equal to one square foot for every 300 square feet of attic space.
2. Provide foundation vents for all crawl spaces. Refer to drawings for locations.
3. Venting for appliances and exhaust fans:
   - A. Provide venting to the exterior as per manufacturer's recommendations for all appliances. Location of ductwork and vent on exterior shall be approved by Architect prior to installation.
   - B. Provide exhaust fans for bathrooms, etc., as shown on drawings. Location of ductwork and vent on exterior shall be approved by Architect prior to installation. Ducts within unconditioned spaces shall be insulated to prevent condensation.
4. Provide Whole-House ventilation system to comply with IECC R403.4

MOISTURE PROTECTION

1. Appropriate sealants shall be selected for each substrate depending upon location (interior or exterior), humidity, moisture conditions, and traffic conditions. Use primers as required.
2. Color of caulking shall be coordinated with adjacent materials and must be approved by Architect prior to application.
3. Joint fillers shall be used:
   - A. To control the depth of sealants in joints.
   - B. To meet the requirements for resilient separations in horizontal joints in floor, pavements, patios, sidewalks, and other light traffic areas.
4. Bond breakers shall be used to prevent adhesion to more than two surfaces.
5. Masonry foundations shall be parged to a thickness of ¾" minimum.
6. Waterproof all below grade foundation walls with a polymer-modified asphalt emulsion similar to TREMCO "TUFF-N-DRI Classic". Dry/ cured membrane thickness shall be minimum 40 mil. Installation and substrate preparation shall be per manufacturer's recommendations. Install subsurface drainage composite similar to CETCO "Aquadrain 10X" over the cured membrane with asphalt emulsion adhesive similar to Henry 111 Insulbond.
7. Footing drains shall be min. 4" in diameter and installed on the exterior of all foundations.
8. All flashing shall be installed according to the building code. An eave flashing strip of 40 mil. self-adhering rubberized asphalt sheet membrane shall be applied to extend from the edge of the roof to a point 24" min. inside the interior wall line of the structure, and at all valleys.
9. All membrane roofing to be approved by Architect prior to installation.
10. All roof shingles to be approved by Architect prior to installation.
11. Asphalt shingle roofs with slopes from 2 in 12 to 4 in 12 shall have two layers of #15 roofing felt applied in accordance with with the International Residential Code.
12. Flashing"
    - A. Through-wall and other concealed flashing shall be a composite of fiberglass fabric, 5 oz. copper and asphalt, equal to York Copper Fabric.
    - B. Exposed flashing shall be 16 oz. copper.
13. Painted aluminum drip strips shall be installed at the eave and rake edges of the roof sheathing for shingle roofs, and above window and door trim where indicated.
14. Exterior Insulation and Finish Systems (EIFS) shall be equal to Dryvit, Residential MD System, with Dryvit drainage mat installed between the secondary weather barrier and the insulation board.
15. Cedar roof shingles shall be No. 1, Blue Label, red cedar. Install over "Cedar Breather" by Benjamin Obdyke Inc. and 30# felts in accordance with manufacturer's instructions.
16. Standing seam roofing shall be 16 ounce copper with water-tight standing seams. For slopes greater than 3 in 12 provide #30 roofing felt underlayment on solid sheathing. For slopes 3 in 12 or less provide self-adhering 40 mil ice and water guard membrane over the entire area to receive standing seam roofing.

FINISHES

Gypsum Wallboard:

1. Gypsum wallboard shall be ASTM C-36 as follows:
   - A. Regular (½"): except where noted.
   - B. Water resistant (½"): at bathroom ceilings and walls that are not tiled.
   - C. Durock interior tile backer board (½"): at all surfaces that have tile.
2. Gypsum boards shall have tapered edges to accommodate joint reinforcement.
3. Provide edge corner beads, trim, taping, and joint compounds as required for the proper completion of the job. Materials shall be by U.S. Gypsum or approved equal.
4. Finishing requirements:
   - A. For typical walls and ceilings provide a Level 4 Finish as defined by the Gypsum Association.
   - B. For surfaces noted to receive semi-gloss or gloss paint provide a Level 5 Finish as defined by the Gypsum Association.

Hardwood Flooring:

1. Unless noted otherwise, provide wood strip flooring where shown on the drawings.
2. Wood strip flooring to be oak. Where abutting existing floor, new floor shall match existing in size and grain. Elsewhere, oak shall be "clear" grade, in accordance with the national Oak Flooring Manufacturer's Association.
3. Install flooring in strict accordance with the recommendation of the National Oak Flooring Manufacturer's Association.
4. After the floors have been sanded, the flooring contractor shall apply a minimum of four stain and urethane samples in two foot by two foot areas on the floor for the owner to review. The owner shall have a minimum of two days to make a selection.

Ceramic Tile:

1. Provide ceramic tile and accessories in accordance with the Tile Council of American Specifications 137.1, in colors and patterns to be specified by the owner.
2. Setting materials: comply with pertinent recommendations contained in the Tile Council of America "Handbook for Ceramic Tile Installation."
3. Installation: comply with ANSI A108.1, ANSI A108.2, and the "Handbook for Ceramic Tile Installation" of the Tile Council of America.
   - A. Extend tile into recesses and under equipment and fixtures to form a complete covering without interruptions.
   - B. Terminate tile neatly at obstruction, edges, and corners, without disruption of pattern or joint alignment.
   - C. Align joints when adjoining tiles on floor, base, trim, and walls are the same size.
   - D. Layout tile work and center the tile fields in both directions in each space or on each wall area.
4. Replacement reserve: Contractor shall furnish to the Owner one unopened box of additional tiles for future repairs and maintenance work.

Carpet:

1. Provide carpeting as indicated on the drawings. Refer to allowances on schedule sheet.

Vinyl Tile:

1. Installation of all vinyl composition tile (VCT) shall be done in a manner which conforms with:
   - ASTM E 648,
   - ASTM E 84, AND
   - ASTM E 662.
2. Replacement reserve: Contractor shall furnish Owner with one unopened box of additional tile for future repairs and maintenance.

Paint:

1. All paint and primers to be Benjamin Moore or approved equal. Refer to schedule for colors and types.
2. All surfaces to be painted shall receive one primer coat and two finish coats.
3. All paint shall be applied according to manufacturer's recommendations.

Architectural Woodwork and Trim:

1. All millwork trim and molding shall be installed accordingly to the quality of standards of the Architectural Woodwork Institute (AWI).
2. All interior trim and millwork shall conform to AWI "custom standards."
3. Flat trim shall be clear pine or approved equal.
4. All corners of trim and siding are to be mitered, except inside corners of interior running trim which shall be coped. Exposed end grains will not be accepted.
5. All millwork and trim shall be installed by craftsmen with experience in work of this type. All work shall be first class in every regard and consistent with the best practices of the trade.

FIRE AND LIFE SAFETY

1. Stairs:
   - A. 7¾" max rise
   - B. 10" min tread
   - C. 6'-8" min head room
   - D. Height of handrails shall be continuous, 34" (min) to 38" (max) above finished stair treads. Handrails required at stairs with 3 or more risers.
   - E. Guardrails shall be 36" (min) to 42" (max) above finished floor.
2. Provide a clear window opening of 5.7 square feet with no less than 20" clear wide and 24" clear high for sleeping area. The sill of this windows shall be no more than 44" above the finished floor.
3. Provide safety glass in all exterior doors, storm doors, sliding glass doors, shower doors, and tub enclosures above and adjacent to spas and tubs and where the glass is closer than 18" to the floor and exceeds 9 square feet in area.
4. Ground metal siding.
5. Smoke detectors shall be provided on every floor, in each bedroom and in each hall outside of bedrooms, and integrated with the electrical system with battery backup.
6. If a fuel-burning appliance, fireplace, or attached garage is present, an interconnected battery back up carbon monoxide alarm or detector must be installed outside all sleeping areas and on all floors. If fuel-buring appliance or fireplace is present in any sleeping area, an interconnected carbon monoxide alarm or detector must also be installed in that room as required per local jurisdiction.
7. Flues shall be class B except solid fuel flues, which shall be class A.
8. Top of flue shall be 2'-0" above any part of structure within 10'-0" of flue.
9. Interior finish of walls and ceiling shall have a flame spread rating not greater than Class III.
10. Carpeting shall meet federal regulation DOC FF-1.
11. Prefab fireplaces shall be (U.L.) rated and installed according to manufacturer's specifications.
12. Provide outside air for combustion in all prefab and masonry fireplaces.

ELECTRICAL AND LIGHTING NOTES

1. Electrical contractor shall size and arrange all circuits in accordance with the National Electric Code as well as all local codes. Service to be upgraded as required.
2. Wall outlets are to be mounted 1'-6" above finished floor unless noted otherwise.
3. Switches are to be mounted 4'-0" above finished floor unless noted otherwise.
4. Mounting heights are to the vertical center of the equipment to the finished elevation of the floor.
5. All new switch and outlet styles are to be approved by Owner prior to installation.
6. Provide hardwired smoke detectors on all floors, located as per Montgomery County Code.
7. Electrician shall locate all fixtures, switches, outlets, etc. prior to running wiring. Owner, Architect, and Electrician to meet at a mutually agreed upon time to review locations. The purpose of which is to allow for possible relocation prior to wiring.
8. Owner is allowed to add an additional ten (10) items (switches, cable, phone, outlet, etc., or any combination) at no additional charge to the owner.
9. Contractor shall determine, based on an on-site review of existing and proposed electrical systems, whether an electrical service heavy-up will be required, and shall include the costs of all required upgrades in their Contract Amount.
10. Provide door bell, transformer, and chime for front door and where indicated. In lieu of Owner's selection otherwise, price shall be based on the following: Illuminated Button - Destination Lighting product number 15921; Transformer - 16V; Chimes - Teiber Model CTSB-or STPW-, in Owner's choice of finish. Verify all selections and mounting locations with Owner prior to purchasing.
11. Per IECC R404.1 90% of installed lighting fixtures must contain high efficacy lamps.

MECHANICAL NOTES

1. All work shall be done in accordance with the International Residential Code (IRC), 2018 Edition, as well as IECC 2018 and other local codes including a compliant Manual J load calculation/ design in accordance with ACCA recommendations.
2. Unless otherwise indicated in Contract Documents, Contractor shall be delegated to design a fully functional and performing mechanical system in accordance with applicable mechanical codes and standards. Contractor shall submit all duct layouts and air handler locations (and thermostat locations) to the Owner and the Architect for approval prior to the commencement of framing. No extras will be given for any modification required to the framing due to ductwork.
3. All exterior unit locations to be coordinated with Owner and Architect.
4. Air conditioners shall be Energy Star rated and shall have a minimum 13 SEER rating with two zones each. Gas furnaces shall have a minimum Annual Fuel Utilization Efficiency rating of 90%.
5. Equipment will be Carrier or approved equal.
6. Ductwork will be galvanized sheet metal and flex.
7. Registers and return grilles are Hart & Cooley or equal.

PLUMBING NOTES

1. All work shall be done in accordance with the International Residential Code (IRC), 2018 Edition, as well as IECC 2018 and other local codes.
2. Contractor shall provide riser diagrams as required for permit, and shall submit to the Architect proposed locations of all waste and supply lines prior to the commencement of framing. No extras will be given for any modification required to the framing due to plumbing lines. Provide cast iron at vertical waste lines.
3. Unless otherwise indicated in Contract Documents. Contractor shall be delegated to design a fully functional and performing water supply and waste system in accordance with applicable plumbing codes and standards. Install water heater and reserve tank per requirements of the house with recirculate system.
4. Provide drain pans under all water heaters and washing machines, and pipe the pan to the sanitary drain upstream of a trap.
5. Contractor shall make a count of existing and proposed fixtures to determine whether a water or sewer upgrade will be required, and shall include the costs of all required upgrades in his Contract Amount. The count of existing fixtures shall be based on an on-site inspection.
6. Provide cast iron at vertical waste lines.
7. Locate plumbing clean out plugs in bottom ⅓" of wall, typical.

STEAM SHOWER

1. Wall construction: Provide ceramic tile over dryset or latex Portland cement mortar bond coat over tile backer board over Dow insulation board over 2x4 studs.
2. Ceiling construction: Same as walls, provide continuous sloped ceiling (½" per foot), and provide rounded inside corner tile at joint between wall and ceiling.
3. Insulate all walls, ceiling, and floor adjacent to steam shower.
4. Steam shower to be watertight, including a watertight shower door.
5. Steam Unit: "Mr. Steam model #MS-150, 6kw or approved equal. Provide the following connections: water inlet ⅜" NPT, steam outlet NPT, drain ⅜" NPT. Follow all manufacturer's specifications.

ROOFTOP-MOUNTED PHOTOVOLTAIC SYSTEMS

1. Structural support for all rooftop-mounted photovoltaic systems and other considerations shall comply with 2018 IRC Section R324.4

STATIONARY STORAGE BATTERY SYSTEMS

1. The installation of battery storage systems shall comply with 2018 IRC Section R327

FILE NAME:

GTM ARCHITECTS

7735 OLD GEORGETOWN ROAD
SUITE 700
BETHESDA, MD 20814
(240)333-2000
(240)333-2001 FAX
WWW.GTMARCHITECTS.COM

GTM

Seal

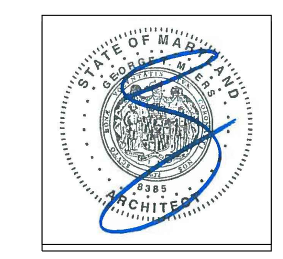

I certify that these documents were prepared or approved by me, and that I am a duly licensed architect under the laws of the State of Maryland, license number 8385, Expiration Date: 12-06-2022.

Consultant

Project
21 HIGH STREET LOT 3

Owner

Developer

Issue Description	Date
PERMIT SET	4-11-2022

GTM Project No.	18.0320
Checked By	GTM
Drawn By	LEO/DER
Scale	AS NOTED

Sheet Title

SPECIFICATIONS

Sheet No.

002

COPYRIGHT, 2022 GTM ARCHITECTS, INC.

STUCCO FINISH

Part 1 - General

1.1 Summary

A. This Section includes the following:
- Exterior Portland cement plasterwork (stucco) on metal lath.

B. See Sections "Wood and Carpentry" on Specifications Sheet (SP) and section 3.1.A this sheet for additional structural requirements for wood framing and wood sheathing.

1.2 Quality Assurance

A. Samples: For each type of finish coat indicated; 12 by 12 inches, and prepared on rigid backing. Obtain Architect and Owner approval prior to actual installation.

B. Mockups: Before plastering, install mockups of at least 100 sq ft in surface area to demonstrate aesthetic effects and set quality standards for materials and execution.
- Install mockups for each type of finish indicated.
- Approved mockups may become part of the completed work if undisturbed at time of Substantial Completion.

1.3 Project Conditions

A. Comply with ASTM C 926 requirements.

B. Exterior Plasterwork: Apply plaster when ambient temperature is between 50° and 80° F.

C. Apply stucco on south-facing walls only on overcast days.

Part 2 - Products

2.1 Metal Lath

A. Expanded-Metal Lath: ASTM C 847 with ASTM A 653/A 653M, g60 (z180), hot-dip galvanized zinc coating.
- Diamond-Mesh Lath: Self-furring, 3.4 lb/sq yd

2.2 Accessories

A. General: Comply with ASTM C 1063 and coordinate depth of trim and accessories with thicknesses and number of plaster coats required.

B. Zinc and Zinc-coated (Galvanized) Accessories:
- Foundation Weep Screed: Fabricated from hot-dip galvanized steel sheet, ASTM A 653/A 653M, G60 zinc coating.
- Cornerite: Fabricated from metal lath with ASTM A 653/ A 653M, g60, hot-dip galvanized zinc coating.
- External-Corner Reinforcement: Fabricated from metal lath with ASTM A 653/A 653M, G60, hot-dip galvanized zinc coating.
- Cornerbeads: Fabricated from zinc or galvanized steel.
  a. Small-nose style; use unless otherwise indicated.
- Casing Beads: Fabricated from zinc or galvanized steel; square-edged style, with expanded flanges.
- Control Joints: Fabricated from zinc or galvanized steel; one-piece type, folded pair of unperforated screeds in M-shaped configuration; with perforated flanges and removable protective tape on plaster face of control joint.
- Expansion Joints: fabricated with zinc or galvanized steel; folded pair of unperforated screeds in M-shaped configuration; with expanded flanges.
- Two-piece Expansion Joints: Fabricated from zinc or galvanized steel; formed to produce slip-joint and square-edged reveal that is adjustable from ½"-to-⅝" wide; with perforated flanges.

2.3 Miscellaneous Materials

A. Water for Mixing: Potable and free of substances capable of affecting plaster set or of damaging plaster, lath, or accessories.

B. Fiber for Base Coat: alkaline-resistant glass or polypropylene fibers, ½" long, free of contaminants, manufactured for use in Portland cement plaster.

C. Bonding Compound: ASTM C 932.

D. Fasteners for attaching Metal lath to Substrates: Complying with ASTM C 1063.

E. isolation Barrier at Exterior Walls: Tyvek StuccoWrap, as manufactured by Dupont.

2.4 Plaster Materials

A. Portland Cement: ASTM C 150, Type I or II
- Color for Finish Coats: White or Gray as required to match color sample.

B. Colorants for Job-Mixed Finish Coats: Colorfast mineral pigments that produce finish plaster color to match Architect's sample.

C. Lime: ASTM C 206, Type S; or ASTM C 207, Type S.

D. Sand Aggregate: ASTM C 897.
- Color for Job-Mixed Finish Coats: Color to produce sample to match Architect's sample.

E. Ready-Mixed Finish-Coat Plaster: Mill-mixed Portland cement, aggregates, coloring agents, and proprietary ingredients.
- Products:
  a. California Stucco Products Corp., Conventional Portland Cement Stucco.
  b. ChemRex; Thoro Stucco.
  c. Florida Stucco Corp.
  d. Highland Stucco and Lime Products, Inc.
  e. United States Gypsum Co.; Oriental Exterior Finish Stucco.
- Color: To match existing stucco.

2.5 Plaster Mixes

A. General: Comply with ASTM C 926 for applications indicated.
- Fiber Content: Add fiber to base-coat mixes after ingredients have mixed at least two minutes. Comply with fiber manufacturer's written instructions for fiber quantities in mixes, but do not exceed 1 lb of fiber/cu ft of cementitious materials. Reduce aggregate quantities accordingly to maintain workability.

B. Portland Cement Base Coat Mixes:
- Over Metal Lath: Scratch and brown coats for three-coat plasterwork as follows:
  a. Scratch Coat: For cementitious material, mix 1 part Portland cement and ¾ parts lime. Use 2-½ to 4 parts aggregate per part of cementitious material (sum of separate volumes of each component material).
  b. Brown Coat: For cementitious material, mix 1 part Portland cement and ¾ parts lime. Use 3 to 5 parts aggregate per part of cementitious material (sum of separate volumes of each component material).
- Over Brick and Monolithic Concrete:
  a. For cementitious material, mix 1 part Portland cement and 0 to ¾ parts lime. Use 2-½ to 4 parts aggregate per part of cementitious material (sum of separate volumes of each component material).
- Over Brick and Concrete Masonry Unit: Single base coats for two-coat plasterwork as follows:
  a. For cementitious material, mix 1 part Portland cement ¾ to 1-½ parts lime. Use 2-½ to 4 parts aggregate per part of cementitious material (sum of separate volumes of each component material).

C. Portland Cement Job-Mixed Finish-Coat Mixes: For cementitious materials, mix 1 part Portland cement and 1-½ parts lime. use 1-½ to 3 parts aggregate per part of cementitious material (sum of separate volumes of each component material).

D. Factory-Prepared Finish-Coat Mixes: For ready-mixed finish-coat plasters acrylic-based finish coatings, comply with manufacturer's written instructions.

PART 3 - EXECUTION

3.1 Preparation

A. Verify that all sheathing is plywood or OSB, and that all joints are backed by blocking and nailed or screwed to the blocking.

A. Protect adjacent work from soiling, spattering, moisture deterioration, and other harmful effects caused by plastering.

B. Prepare solid-plaster bases that are smooth or that do not have the suction capability required to bond with plaster according to ASTM C 926.

3.2 Installing Metal Lath

A. Expanded-Metal lath: Install according to ASTM C 1063.

3.3 Installing Accessories

A. Install according to ASTM C 1063 and at locations indicated on drawings.

B. Reinforcement for External Corners:
- Install lath-type inside corner reinforcement at exterior locations.
- Install cornerbead at outside corner locations.

C. Control Joints: Install control joints in specific locations approved by Architect for visual effect as follows:
- As required to delineate plasterwork into areas (panels) of the following maximum sizes:
  a. Vertical Surfaces: 144 sq ft
  b. Horizontal and other Non-Vertical Surfaces: 100 sq ft
- At distances between control joints of not greater than 18 feet O.C.
- As required to delineate plasterwork into areas (panels) with length-to-width ratios of not greater than 2-1/2:1.
- Where control joints occur in surface of construction directly behind plaster.
- Where plasterwork areas change dimensions, to delineate rectnagular-shaped areas (panels) and to relieve the stress that occurs at the corner formed by the dimension change.
- Above and below band board in multi-floor buildings.
- As indicated on drawings.

3.4 Plaster Application

A. General: Comply with ASTM C 926.

B. Bonding Compound: Apply on unit masonry and concrete plaster bases.

C. Plaster Finish Coats: Apply to provide float, dash, scraped trowel-textured, skip trowel-textured, brocade (knock-down dash), trowel sweep, combed, sacked (California mission), or other finish selected by the Architect.

D. Acrylic-Based Finish Coatings: Apply coating system, including primers, finish coats, and sealing topcoats, according to manufacturer's written instructions.

3.5 Cutting and Patching

A. Cut, patch, replace, and repair as necessary to accomodate other work and to restore cracks, dents, and imperfections. Repair or replace work to eliminate blistes, buckles, crazing (check cracking), dry outs, efflorescence, sweat outs, and similar defects and where bond to substrate has failed.

GTM ARCHITECTS

7735 OLD GEORGETOWN ROAD
SUITE 700
BETHESDA, MD 20814
(240)333-2000
(240)333-2001 FAX
WWW.GTMARCHITECTS.COM

Seal

I certify that these documents were prepared or approved by me, and that I am a duly licensed architect under the laws of the State of Maryland. License number 8888, Expiration Date: 10.06.2020.

Consultant

Project

21 HIGH STREET
LOT 3

Owner

Developer

PERMIT SET	4-11-2022

Issue Description	*Date*

GTM Project No.	18.0320
Checked By	GTM
Drawn By	LEO/DER
Scale	AS NOTED

Sheet Title

STUCCO SPECIFICATIONS

Sheet No.

003

COPYRIGHT, 2022 GTM ARCHITECTS, INC.

DOOR SCHEDULE

DOOR				FRAME					HARDWARE	REMARKS
NO.	SIZE	MATERIAL	MANUF.	MAT:	FIN:	HEAD	JAMB	SILL		
BASEMENT										
1	2^{6} x 6^{8}	SOLID CORE MASONITE	T.B.D						H-4	
2	2^{6} x 6^{8}	SOLID CORE MASONITE	T.B.D						H-4	
3	3^{0} x 6^{8}	SOLID CORE MASONITE	T.B.D.						H-4	
4	2^{4} x 6^{8}	SOLID CORE MASONITE	T.B.D						H-3	
5	2^{4} x 6^{8}	SOLID CORE MASONITE	T.B.D.						H-3	
6	2^{6} x 6^{8}	SOLID CORE MASONITE	T.B.D.						H-3	
7	2^{4} x 6^{8}	SOLID CORE MASONITE	T.B.D.						H-4	
FIRST FLOOR										
8	3^{0} x 8^{0}	WOOD & GLASS	T.B.D						H-2	PAINT GRADE W/ 15" TEMPERED SIDELIGHTS
9	2^{4} x 8^{0}	SOLID CORE MASONITE	T.B.D.						H-3	
10	2^{4} x 8^{0}	SOLID CORE MASONITE	T.B.D.						H-4	
11	SCS3-10-OQ x 8-0	WOOD & GLASS	JELDWEN						H-2	TEMPERED, WEATHERSTRIPPED SLIDER
12	2^{8} x 8^{0}	WOOD & GLASS	T.B.D						H-2	PAINT GRADE
SECOND FLOOR										
13	3^{0} x 7^{0}	SOLID CORE MASONITE	T.B.D.						H-3	
14	2^{4} x 7^{0}	SOLID CORE MASONITE	T.B.D.						H-4	
15	2^{4} x 7^{0}	SOLID CORE MASONITE	T.B.D.						H-4	
16	2^{4} x 7^{0}	SOLID CORE MASONITE	T.B.D.						H-3	
17	2^{4} x	GLASS	T.B.D							TEMPERED SHOWER DOOR
18	2^{4} x 7^{0}	SOLID CORE MASONITE	T.B.D.						H-3	
19	2^{4} x 7^{0}	SOLID CORE MASONITE	T.B.D.						H-4	
20	2^{4} x 7^{0}	SOLID CORE MASONITE	T.B.D.						H-3	
21	1 PAIR 2^{0} x 7^{0}	SOLID CORE MASONITE	T.B.D						H-5	
22	2^{6} x 7^{0}	SOLID CORE MASONITE	T.B.D.						H-3	
23	1 PAIR 1^{6} x 7^{0}	SOLID CORE MASONITE	T.B.D						H-5	
24	2^{8} x 7^{0}	SOLID CORE MASONITE	T.B.D.						H-6	POCKET DOOR
25	2^{6} x 7^{0}	SOLID CORE MASONITE	T.B.D.						H-3	
26	1 PAIR 2^{0} x 7^{0}	SOLID CORE MASONITE	T.B.D						H-5	
27	2^{4} x 7^{0}	SOLID CORE MASONITE	T.B.D.						H-3	
ATTIC										
28	2^{4} x 6^{8}	SOLID CORE MASONITE	T.B.D.						H-3	
29	2^{4} x	GLASS	T.B.D						-	TEMPERED SHOWER DOOR
30	2^{6} x 6^{8}	SOLID CORE MASONITE	T.B.D						H-3	
31	2^{4} x 6^{8}	SOLID CORE MASONITE	T.B.D						H-4	
DETACHED GARAGE										
32	10^{0} x 8^{0}	WOOD/GLASS	T.B.D						-	PAINT GRADE
33	3^{0} x 7^{0}	WOOD/GLASS	T.B.D						H-2	PAINT GRADE

HARDWARE SCHEDULE

NOTE: ALL HARDWARE TO BE BY SCHLAGE OR APPROVED EQUAL. (EXCEPT FRENCH DOORS, WHICH ARE TO HAVE STANDARD HARDWARE BY DOOR MANUF.)

H-1	DOUBLE CYLINDER ENTRANCE LOCK, DEADBOLT
H-2	MULTI-POINT LEVER SET BY WINDOW/DOOR MANUF.
H-3	BATH/BEDROOM PRIVACY LOCK
H-4	PASSAGE SET
H-5	BALL CATCHES $ DUMMY KNOBS
H-6	POCKET DOOR HARDWARE
H-7	FRENCH DOOR PRIVACY LOCK-FLUSH BOLT/DUMMY HANDSET COMBO

GENERAL DOOR NOTES:

1. CONFIRM HARDWARE SELECTION WITH OWNER PRIOR TO ORDERING.
2. INTERIOR DOORS TO BE SOLID CORE.
3. DOORS W/ SIDELITES SHALL HAVE 2-2x6 SPACERS BETWEEN UNLESS SHOWN OTHERWISE
4. PROVIDE SAFETY GLASS AT ALL EXTERIOR FRENCH DOORS, PER CODE
5. PROVIDE CHARCOAL SCREENING @ SCREEN DOORS
6. CONNECT GARAGE DOOR TO ALARM SYSTEM PER OWNER

GENERAL NOTES

1. ALL WINDOWS TO HAVE SCREENS (SCREEN FRAMES COLOR T.B.S.).
2. ALL WINDOWS TO BE ALUMINUM CLAD EXTERIOR, PRE-PRIMED INTERIOR.
3. CONFIRM HARDWARE FINISH W/ ARCHITECT & OWNER PRIOR TO ORDER.
4. ALL GLAZING TO BE DOUBLE PANED, LOW E, CLEAR INSULATED.
5. CONFIRM OVERALL WINDOW SCHEDULE W/ ARCHITECT PRIOR TO ORDER.
6. ALL WINDOWS & GLASS DOORS TO BE SIMULATED DIVIDED LITE, 7/8" MUNTIN.. SEE ELEVATIONS FOR MUNTIN CONFIGURATIONS
7. PROVIDE WHITE JAMB LINERS.
8. ALL EXTERIOR TRIM FOR FRAME WALL UNITS TO BE AZEK PROVIDED & INSTALLED BY G.C.
9. GANGED WINDOWS SHALL 3-2x4 SPACERS BETWEEN UNLESS SHOWN OTHERWISE
10. PROVIDE EGRESS HARDWARE IN EGRESS WINDOWS AS REQUIRED.
11. SEE ELEVATIONS FOR TYPICAL HEAD HEIGHTS ABOVE FINISHED SUBFLOOR
12. PROVIDE SAFETY GLASS AT ENTRIES, STAIRS, OVER BATHTUBS & ELSEWHERE AS REQUIRED BY CODE.

WINDOW SCHEDULE (DETACHED GARAGE)

400	DOUBLE HUNG	JELDWEN SITELINE	ECD2540	26 1/8"x 40 3/4"	INSULATED	SEE ELEVS. FOR GRILLE PATTERN	
401	DOUBLE HUNG	JELDWEN SITELINE	ECD3148	32 1/8"x 48 3/4"	INSULATED	SEE ELEVS. FOR GRILLE PATTERN	
402	DOUBLE HUNG	JELDWEN SITELINE	ECD2540	26 1/8"x 40 3/4"	INSULATED	SEE ELEVS. FOR GRILLE PATTERN	
403	DOUBLE HUNG	JELDWEN SITELINE	ECD3148	32 1/8"x 48 3/4"	INSULATED	SEE ELEVS. FOR GRILLE PATTERN	
404	DOUBLE HUNG	JELDWEN SITELINE	ECD3148	32 1/8"x 48 3/4"	INSULATED	SEE ELEVS. FOR GRILLE PATTERN	
405	DOUBLE HUNG	JELDWEN SITELINE	ECD3148	32 1/8"x 48 3/4"	INSULATED	SEE ELEVS. FOR	

WINDOW SCHEDULE (BASEMENT)

#	TYPE	MANUFACTURER	CAT. NO.	ROUGH OPNG.	GLASS	REMARKS	
001	CASEMENT	JELDWEN SITELINE	ECC3624	36 3/4" x 24 3/4"	INSULATED	SEE ELEVS. FOR GRILLE PATTERN	TEMPERED UNIT
002	CASEMENT	JELDWEN SITELINE	ECC3624	36 3/4" x 24 3/4"	INSULATED	SEE ELEVS. FOR GRILLE PATTERN	TEMPERED UNIT
003	DOUBLE HUNG	JELDWEN SITELINE	ECD3760	38 1/8" x 60 3/4"	INSULATED	SEE ELEVS. FOR GRILLE PATTERN	EGRESS UNIT

WINDOW SCHEDULE (FIRST FLOOR)

100	DOUBLE HUNG	JELDWEN SITELINE	ECD3372	34 1/8" x 72 3/4"	INSULATED	SEE ELEVS. FOR GRILLE PATTERN	
101	DOUBLE HUNG	JELDWEN SITELINE	ECD3372	34 1/8" x 72 3/4"	INSULATED	SEE ELEVS. FOR GRILLE PATTERN	
102	DOUBLE HUNG	JELDWEN SITELINE	ECD3372	34 1/8" x 72 3/4"	INSULATED	SEE ELEVS. FOR GRILLE PATTERN	
103	DOUBLE HUNG	JELDWEN SITELINE	ECD2172	22 1/8" x 72 3/4"	INSULATED	SEE ELEVS. FOR GRILLE PATTERN	
104	DOUBLE HUNG	JELDWEN SITELINE	ECD4572	46 1/8" x 72 3/4"	INSULATED	SEE ELEVS. FOR GRILLE PATTERN	
105	DOUBLE HUNG	JELDWEN SITELINE	ECD2172	22 1/8" x 72 3/4"	INSULATED	SEE ELEVS. FOR GRILLE PATTERN	
106	CASEMENT	JELDWEN SITELINE	ECC2454-2	48 3/4"x 54 3/4"	INSULATED	SEE ELEVS. FOR GRILLE PATTERN	
107	DOUBLE HUNG	JELDWEN SITELINE	ECD3372	34 1/8" x 72 3/4"	INSULATED	SEE ELEVS. FOR GRILLE PATTERN	
108	DOUBLE HUNG	JELDWEN SITELINE	ECD3372	34 1/8" x 72 3/4"	INSULATED	SEE ELEVS. FOR GRILLE PATTERN	
109	DOUBLE HUNG	JELDWEN SITELINE	ECD3372	34 1/8" x 72 3/4"	INSULATED	SEE ELEVS. FOR GRILLE PATTERN	
110	DOUBLE HUNG	JELDWEN SITELINE	ECD3372	34 1/8" x 72 3/4"	INSULATED	SEE ELEVS. FOR GRILLE PATTERN	
111	DOUBLE HUNG	JELDWEN SITELINE	ECC3036	30 3/4"x 36 3/4"	INSULATED	SEE ELEVS. FOR GRILLE PATTERN	
112	DOUBLE HUNG	JELDWEN SITELINE	ECC3036	30 3/4"x 36 3/4"	INSULATED	SEE ELEVS. FOR GRILLE PATTERN	
113	CASEMENT	JELDWEN SITELINE	ECC3648	36 3/4"x 48 3/4"	INSULATED	SEE ELEVS. FOR GRILLE PATTERN	
114	DOUBLE HUNG	JELDWEN SITELINE	ECD3372	34 1/8" x 72 3/4"	INSULATED	SEE ELEVS. FOR GRILLE PATTERN	

WINDOW SCHEDULE (SECOND FLOOR)

200	DOUBLE HUNG	JELDWEN SITELINE	ECD3364	34 1/8" x 64 3/4"	INSULATED	SEE ELEVS. FOR GRILLE PATTERN	EGRESS UNIT
201	DOUBLE HUNG	JELDWEN SITELINE	ECD3364	34 1/8" x 64 3/4"	INSULATED	SEE ELEVS. FOR GRILLE PATTERN	EGRESS UNIT
202	DOUBLE HUNG	JELDWEN SITELINE	ECD3364	34 1/8" x 64 3/4"	INSULATED	SEE ELEVS. FOR GRILLE PATTERN	EGRESS UNIT
203	DOUBLE HUNG	JELDWEN SITELINE	ECD3364	34 1/8" x 64 3/4"	INSULATED	SEE ELEVS. FOR GRILLE PATTERN	EGRESS UNIT
204	DOUBLE HUNG	JELDWEN SITELINE	ECD3364	34 1/8" x 64 3/4"	INSULATED	SEE ELEVS. FOR GRILLE PATTERN	EGRESS UNIT
205	DOUBLE HUNG	JELDWEN SITELINE	ECD3364	34 1/8" x 64 3/4"	INSULATED	SEE ELEVS. FOR GRILLE PATTERN	TEMPERED UNIT
206	DOUBLE HUNG	JELDWEN SITELINE	ECD3364	34 1/8" x 64 3/4"	INSULATED	SEE ELEVS. FOR GRILLE PATTERN	TEMPERED UNIT
207	DOUBLE HUNG	JELDWEN SITELINE	ECD3364	34 1/8" x 64 3/4"	INSULATED	SEE ELEVS. FOR GRILLE PATTERN	EGRESS UNIT
208	DOUBLE HUNG	JELDWEN SITELINE	ECD3364	34 1/8" x 64 3/4"	INSULATED	SEE ELEVS. FOR GRILLE PATTERN	EGRESS UNIT
209	DOUBLE HUNG	JELDWEN SITELINE	ECC3036	30 3/4"x 36 3/4"	INSULATED	SEE ELEVS. FOR GRILLE PATTERN	
210	DOUBLE HUNG	JELDWEN SITELINE	ECC3036	30 3/4"x 36 3/4"	INSULATED	SEE ELEVS. FOR GRILLE PATTERN	
211	DOUBLE HUNG	JELDWEN SITELINE	ECD3364	34 1/8" x 64 3/4"	INSULATED	SEE ELEVS. FOR GRILLE PATTERN	TEMPERED UNIT
212	DOUBLE HUNG	JELDWEN SITELINE	ECD3364	34 1/8" x 64 3/4"	INSULATED	SEE ELEVS. FOR GRILLE PATTERN	TEMPERED UNIT
213	DOUBLE HUNG	JELDWEN SITELINE	ECD3364	34 1/8" x 64 3/4"	INSULATED	SEE ELEVS. FOR GRILLE PATTERN	EGRESS UNIT

WINDOW SCHEDULE (ATTIC)

300	CASEMENT	JELDWEN SITELINE	ECC3642	36 3/4"x 42 3/4"	INSULATED	SEE ELEVS. FOR GRILLE PATTERN	
301	CASEMENT	JELDWEN SITELINE	ECC3642	36 3/4"x 42 3/4"	INSULATED	SEE ELEVS. FOR GRILLE PATTERN	
302	CASEMENT	JELDWEN SITELINE	ECC3648	36 3/4"x 48 3/4"	INSULATED	SEE ELEVS. FOR GRILLE PATTERN	TEMPERED UNIT
303	CASEMENT	JELDWEN SITELINE	ECC3642	36 3/4"x 42 3/4"	INSULATED	SEE ELEVS. FOR GRILLE PATTERN	EGRESS UNIT
304	CASEMENT	JELDWEN SITELINE	ECC3642	36 3/4"x 42 3/4"	INSULATED	SEE ELEVS. FOR GRILLE PATTERN	EGRESS UNIT
305	CASEMENT	JELDWEN SITELINE	ECC3654	36 3/4"x 54 3/4"	INSULATED	SEE ELEVS. FOR GRILLE PATTERN	
306	CASEMENT	JELDWEN SITELINE	ECC3654	36 3/4"x 54 3/4"	INSULATED	SEE ELEVS. FOR GRILLE PATTERN	

GTM ARCHITECTS

7735 OLD GEORGETOWN ROAD
SUITE 700
BETHESDA, MD 20814
(240)333-2000
(240)333-2001 FAX
WWW.GTMARCHITECTS.COM

GTM

Seal

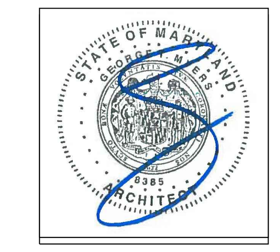

I certify that these documents were prepared or approved by me, and that I am a duly licensed architect under the laws of the State of Maryland, license number 8385, Expiration Date: 12-06-2022.

Consultant

Project

21 HIGH STREET LOT 3

Owner

Developer

Issue Description	Date
PERMIT SET	4-11-2022

GTM Project No.	18.0320
Checked By	GTM
Drawn By	LEO/DER
Scale	AS NOTED

Sheet Title

DOOR & WINDOW SCHEDULES

Sheet No. 004

COPYRIGHT, 2022 GTM ARCHITECTS, INC.

FILE NAME:

GENERAL NOTES

1. Boundary information and two-foot contour data within noted "Limits of Topographic Survey" are based upon surveys performed by CAS Engineering, dated July, 2018.
2. The location of offsite trees, improvements and other structures beyond noted "Limits of Topographic Survey" are approximate. Offsite features are shown per available MNCPPC topographic records and are provided for illustrative purposes only.
3. Total lot area: Lot 3 =15,000 sq. ft. (0.344 ac.)
4. Property is located on Tax Map HU562 and WSSC 200' Sheet 227NW03.
5. Property is located on Montgomery County soils survey map number 14. Soil type(s): 1B, 1C, 6A & 16D. [Gaila silt loam, Baile silt loam & Brinklow-Blocktown channery silt loams] Hydrologic Soil Group "B" "C" & "D".
6. Flood zone "X" per F.E.M.A. Firm Maps, Community Panel Number 24031C0216D.
7. Property is located in the Hawlings River - Reddy Branch Watershed.
8. Water Category - 3, Sewer Category - 3
9. Local utilities include:
   Water / Sewer - Washington Suburban Sanitary Commission
   Electric - PEPCO
   Telephone - Verizon
   Gas - Washington Gas
10. Parcel 770 is located in the Town of Brookeville and the Brookeville Historic District.
11. This plan was created without the benefit of a title report.

TOWN OF BROOKEVILLE ZONING DATA

1. Zoning: Historic Village Residential (HVR)

Minimum Lot Area = 10,000 sq. ft.	Front B.R.L. = 15 ft.
Minimum Lot Width at R/W = 25 ft.	Rear B.R.L. = 40 ft. / 2 ft. (Accessory Structures)
Minimum Lot Width at B.R.L. = N/A	Side B.R.L. = 8 ft. / 2 ft. (Accessory Structures)

2. Verify main building height in accordance with the Town of Brookeville Zoning Ordinance.

Height of building from FF to highest point:	31.89 ft (31'-10 5/8" Per Arch.)
First floor elevation	445.70 ft
Height of building to highest point	31.89 ft
Elevation @ highest point	477.59 ft
Average elevation along front of building	442.80 ft

Height of building at highest point = 477.59 - 442.80 = 34.79 feet
Allowable height of building = 35 feet

Proposed height of building to highest point = 34.79 feet

3. Verify accessory building height in accordance with the Town of Brookeville Zoning Ordinance.

Height of building from FF to highest point:	19.83 ft (19'-10" Per Arch.)
First floor elevation	439.50 ft
Height of accessory building to highest point	19.83 ft
Elevation @ highest point	459.33 ft
Average elevation along front of building	438.95 ft

Height of accessory building at highest point = 459.33 - 438.95 = 20.38 feet
Allowable height of accessory building = 35 feet

Proposed height of accessory building to highest point = 20.38 feet

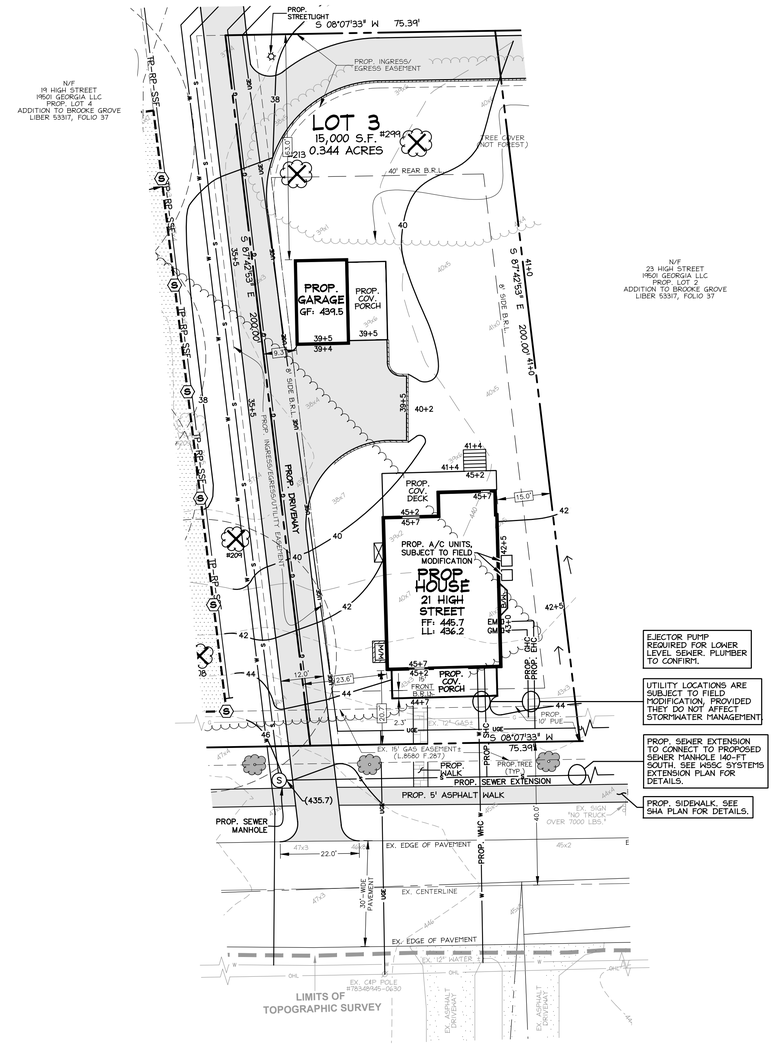

EJECTOR PUMP REQUIRED FOR LOWER LEVEL SEWER. PLUMBER TO CONFIRM.

UTILITY LOCATIONS ARE SUBJECT TO FIELD MODIFICATION, PROVIDED THEY DO NOT AFFECT STORMWATER MANAGEMENT

PROP. SEWER EXTENSION TO CONNECT TO PROPOSED SEWER MANHOLE (40-FT SOUTH. SEE W&SC SYSTEMS EXTENSION PLAN FOR DETAILS.

PROP. SIDEWALK. SEE SHA PLAN FOR DETAILS.

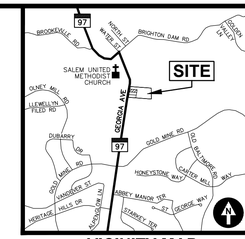

VICINITY MAP

ADC MAP 5050, GRID A-3, SCALE: 1" = 2000'

CAS JOB NO.:	16-579B
DATE:	04/2022

DATE	REVISION
04/01/22	SMF: Building Permit Site Plan to Arch for coordination.

AVERAGE GRADE (ACCESSORY BUILDING)

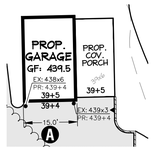

	ELEV @ POINT 1	ELEV @ POINT 2	AVERAGE GRADE	SECTION LENGTH	% LENGTH	AVERAGE GRADE x % LENGTH
Section A	438.60	439.30	438.95	15.0	100.00%	438.95

AVERAGE GRADE = 438.95

AVERAGE GRADE DETERMINATION

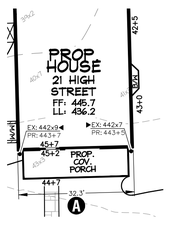

	ELEV @ POINT 1	ELEV @ POINT 2	AVERAGE GRADE	SECTION LENGTH	% LENGTH	AVERAGE GRADE x % LENGTH
Section A	442.90	442.70	442.80	32.3	100.00%	442.80

AVERAGE GRADE = 442.80

LEGEND

EXISTING FEATURES

- Ex. Sewer Manhole and Invert
- Ex. Water Line with Valve
- Ex. Gas Line with Valve
- Ex. Overhead Utility with Pole
- Ex. Two- And Ten-foot Contours
- Ex. Spot Elevation
- Ex. Canopy Line
- Ex. Tree
- Ex. Specimen Tree (DBH ≥ 30")
- Ex. Significant Tree (DBH ≥ 24")
- Ex. Tree (To Be Removed)

PROPOSED FEATURES

- Prop. Water-House Connection
- Prop. Sewer-House Connection
- Prop. Gas-House Connection
- Prop. Electric-House Connection
- Prop. Contour with Elevation
- Prop. Spot Elevation
- Prop. Surface Flow Direction
- Prop. Tree
- Prop. Streetlight

UTILITY INFORMATION

EXISTING UNDERGROUND UTILITY LOCATIONS ARE APPROXIMATE AND MUST BE FIELD VERIFIED. UTILITY LOCATIONS ARE BASED UPON AVAILABLE RECORDS AND ARE SHOWN TO THE BEST OF OUR ABILITY.

FOR LOCATION OF UTILITIES, CALL "MISS UTILITY" AT 1-800-257-7777, OR LOG ON TO WWW.MISSUTILITY.NET/ITIC 48 HOURS IN ADVANCE OF ANY WORK IN THIS VICINITY. THE EXCAVATOR MUST NOTIFY ALL PUBLIC UTILITY COMPANIES WITH UNDER GROUND FACILITIES IN THE AREA OF PROPOSED EXCAVATION AND HAVE THOSE FACILITIES LOCATED BY THE UTILITY COMPANIES PRIOR TO COMMENCING EXCAVATION. THE EXCAVATOR IS RESPONSIBLE FOR COMPLIANCE WITH REQUIREMENTS OF CHAPTER 36A OF THE MONTGOMERY COUNTY CODE.

THIS PLAN IS FOR BUILDING PERMIT APPROVAL ONLY.
SEE THE SHA DISTRICT OFFICE PERMIT PLAN FOR ADDITIONAL DETAILS.
SEE THE APPROVED SEDIMENT CONTROL PLAN FOR REQUIRED SEDIMENT CONTROL AND STORMWATER MANAGEMENT MEASURES.

CLIENT
Phillip E. Sardelis
10776 Ticker Street
Beltsville, MD 20705
philsardelis@gmail.com

ARCHITECT
GTM Architects
Attn: Luke Olson
7735 Old Georgetown Road, Suite 700
Bethesda, MD 20814
(240) 333-2021 Phone
lolson@gtmarchitects.com

21 High Street
Lot 3
Addition to Brooke Grove
Building Permit Site Plan

Lot 3, Addition to Brooke Grove
Plat Pending
Olney (8th) Election District, Montgomery County, MD

21 High Street
Brookeville, Maryland 20833

CAS ENGINEERING-MD
10 South Bentz Street
Frederick, Maryland 21701
301-607-8031 Phone
info@casengineering.com
www.casengineering.com

CAS ENGINEERING-DC, LLC
4836 MacArthur Boulevard, NW, 2nd Floor
Washington, DC 20007
202-393-7200 Phone
info@cas-dc.com
www.cas-dc.com

0 10 20 30 40
SCALE: 1 INCH = 20 FEET

SHEET TITLE:

Building Permit Site Plan

P:\2016\165798__23 High Street_Parcel 770\6 drawings\16579_BPSP_SCP_SWM.dwg, 4/1/2022 10:13:09 AM, smf, © 2022 CAS Engineering and CAS Engineering-DC, LLC

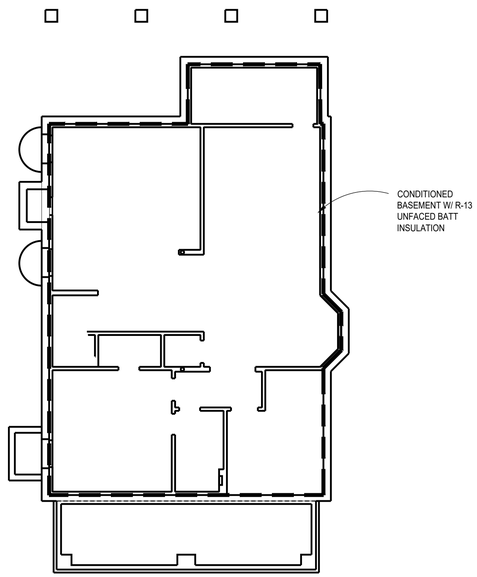

1 BASEMENT THERMAL ENVELOPE PLAN
SCALE: 1/8"=1'=0

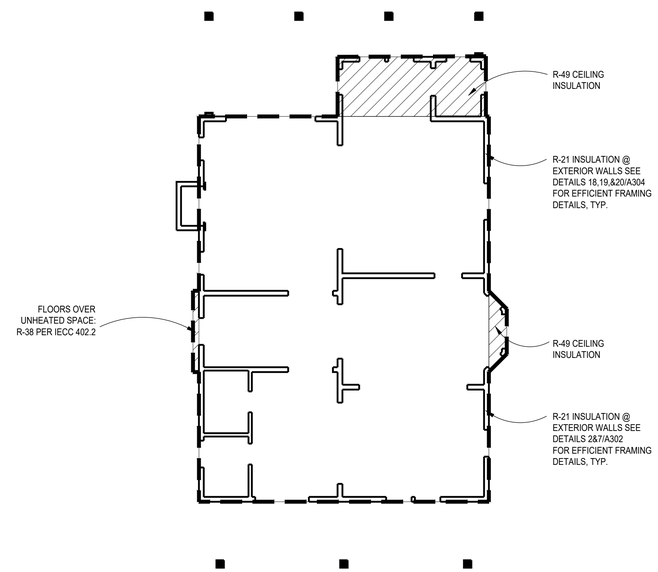

2 FIRST FLOOR THERMAL ENVELOPE PLAN
SCALE: 1/8"=1'=0

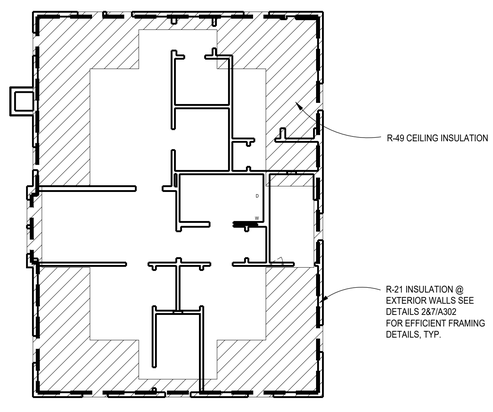

3 SECOND FLOOR THERMAL ENVELOPE PLAN
SCALE: 1/8"=1'=0

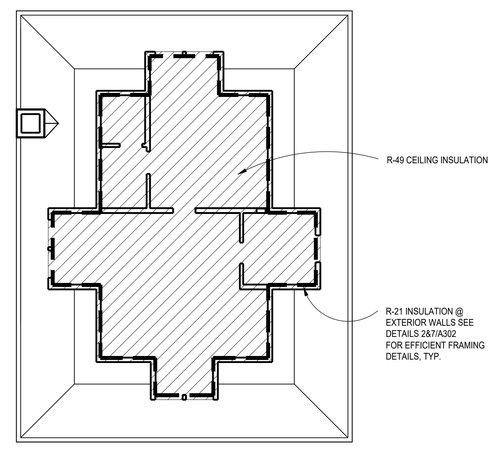

4 ATTIC THERMAL ENVELOPE PLAN
SCALE: 1/8"=1'=0

WINDOW/DOORS THERMAL DATA

THERMAL PERFORMACE DATA FOR DOORS & WINDOWS		
OPENING TYPE	U-VALUE	SHGC
CASEMENT WINDOWS	0.35	0.40
DOUBLE HUNG WINDOWS	0.35	0.40
FRENCH INSWINGING/ SLIDING DOORS	0.35	0.40
EXTERIOR SWINGING DOORS	0.35	0.40

THE AREA-WEIGHTED AVERAGE MAXIMUM FENESTRATION U-FACTOR PERMITTED USING TRADE-OFFS FROM SECTION 402.1 IN ZONE 4 SHALL BE .32 FOR VERTICAL FENESTRATION AND .55 FOR SKYLIGHTS

ENERGY CONSERVATION NOTES

1. The following provisions for thermal resistance meet or exceed the requirements stipulated by the International Energy Conservation Code.
2. INSULATION: IRC

CEILING (OF UPPERMOST STORY)	R-49 W/ 500SF R-30 ALLOWANCE, OR R-38 CONTINUOUS
VAULTED CEILING	R-38
EXTERIOR FRAME WALLS	R-20 OR 13+5 (EXTERIOR)
RIM JOISTS	EQUAL TO WALL BELOW
FLOORS OVER UNHEATED SPACES (INCLUDING FLOOR OVERHANGS)	R-38
MASONRY WALLS (ENCLOSED HEATED LIVING AREAS)	R-13 OR R-10 CONTINUOUS
SLAB ON GRADE (HEATED SPACE) 24" PERIMETER INSULATION	R-10
WINDOWS	0.32 U FACTOR, 0.40 SHGC
DOORS	SEE SECTION R402.3.4

*ALL VALUES ARE TYPICAL UNLESS NOTED OTHERWISE IN ARCHITECTURAL DRAWINGS

3. Air Infiltration:
A. Windows: not exceeding five tenths (0.5) CFM of sash crack.
B. Sliding Glass Doors: not exceeding five tenths (0.5) CFM per foot of door area.
C. Swinging Doors: not exceeding one and twenty-five hundredths (1.25) CFM per square foot of door area. Provide 1" fiberglass sill sealer between foundation wall and all sill plates.
D. In order to seal between dissimilar materials to allow for differential expansion and contraction, the following shall be caulked, gasketed, weatherstripped or otherwise sealed with an air barrier material, suitable film or solid material:

1. All joints, seams, and penetrations
2. Site-built windows, doors, and skylites
3. Openings between window and door assemblies and their respective jambs & framing
4. Utility penetrations
5. Dropped ceilings or chases adjacent to the thermal envelope
6. Knee walls
7. Walls and ceilings separating a garage from conditioned spaces
8. Behind tubs and showers on exterior walls
9. Common walls between dwelling units
10. Attic access openings
11. Rim joist junction
12. Other sources of infiltration

HVAC SYSTEMS & WATER HEATING

1. HEATING & COOLING EQUIP. CONTROLS. AT LEAST ONE PRE-PROGRAMMED PROGRAMMABLE THERMOSTAT IS REQUIRED WHEN USING A FORCED AIR SYSTEM. SEPARATE THERMOSTATS ARE REQUIRED FOR EACH HEATING/COOLING ZONE IN THE DWELLING.

2. DUCT INSULATION. SUPPLY DUCTS LOCATED OUTSIDE THE BUILDING THERMAL ENVELOPE SHALL BE INSULATED TO MINIMUM R-8, ALL OTHER DUCTS INSULATED TO A MINIMUM OF R-6

3. DUCT SEALING. ALL DUCTS, AIR HANDLERS, FILTER BOXES, & BUILDING CAVITIES MUST BE SEALED. JOINTS & SEAMS SHALL COMPLY W/ M1606.4.1 IRC

4. MECHANICAL SYSTEM PIPING INSULATION. R-3 FOR PIPING CARRYING FLUIDS AT >105°F OR <55°F IS REQUIRED

5. MECHANICAL VENTILATION. OUTDOOR AIR INTAKES OR EXHAUSTS SHALL HAVE DAMPERS

6. SERVICE WATER HEATING. PIPING IN THE CIRCULATING HOT WATER SYSTEM SHALL BE INSULATED TO AN R-3 AND SYSTEM TO INCLUDE MANUAL OR AUTOMATIC SWITCH THAT CAN TURN OFF THE SYSTEM WHEN IT IS NOT USED, WATER HEATERS WITH PIPE RISERS SHALL HAVE HEAT TRAPS ON BOTH INLET AND OUTLET OF WATER HEATER UNLESS THE WATER HEATER HAS INTEGRAL HEAT TRAPS OR IS PART OF A CIRCULATION SYSTEM. TYPICAL METHODS USED FOR CREATING HEAT TRAPS ARE "U" OR "RAMS HORN" BENDS IN THE FLEXIBLE PIPE CONNECTORS OR INSTALLING AFTERMARKET PIPE NIPPLES WITH INTEGRAL TRAPS.

7. EQUIPMENT SIZING. HEATING AND COOLING EQUIPMENT SHALL BE SIZED BASED ON BUILDING LOADS CALCULATED IN ACCORDANCE WITH ACCA (AIR CONDITIONING CONTRACTORS OF AMERICA) MANUAL-J, A SIMPLIFIED METHOD OF CALCULATING HEATING AND COOLING LOADS. THE MANUAL-J CALCULATIONS SHALL BE SUBMITTED UPON APPLICATION FOR THE MECHANICAL PERMIT.

SECTION 302.1 OF IECC SPECIFIES THE INTERIOR DESIGN TEMPERATURES USED FOR HEATING AND COOLING LOAD CALCULATIONS AS MAXIMUM OF 72°F FOR HEATINGAND MINIMUM 75°F FOR COOLING.

LEGEND

INSULATION PERIMETER

AREA OF INSULATION ABOVE OR BELOW AS INDICATED

GTM ARCHITECTS

7735 OLD GEORGETOWN ROAD
SUITE 700
BETHESDA, MD 20814
(240)333-2000
(240)333-2001 FAX
WWW.GTMARCHITECTS.COM

Seal

I certify that these documents were prepared or approved by me, and that I am a duly licensed architect under the laws of the State of Maryland. Expiration Date: 01.06.2023 License Number: 8085.

Consultant

Project

21 HIGH STREET LOT 3

Owner

Developer

PERMIT SET	4-11-2022

Issue Description	*Date*

GTM Project No.	18.0320
Checked By	GTM
Drawn By	LEO/DER
Scale	AS NOTED

Sheet Title

THERMAL ENERGY DIAGRAMS

Sheet No.

EC001

COPYRIGHT, 2022 GTM ARCHITECTS, INC.

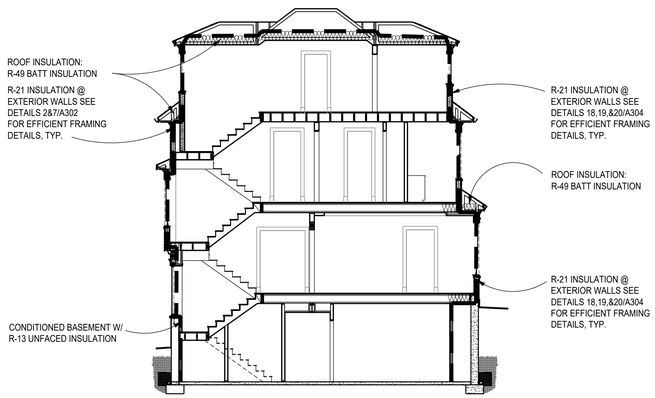

1 TYPICAL THERMAL ENVELOPE BUILDING SECTION

SCALE: 1/8"=1'=0

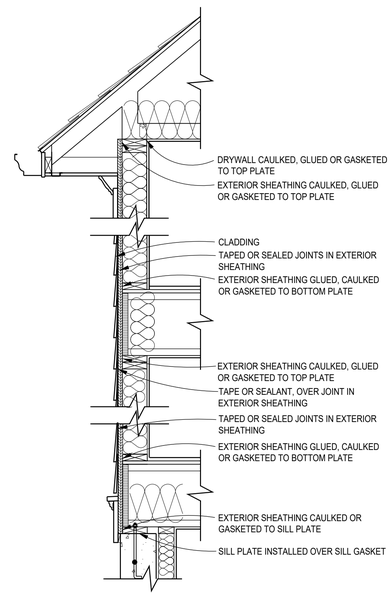

2 ENVELOPE AIR SEALING DETAIL

SCALE: 3/4"=1'-0"

*95 TOTAL SQ. FT. OF PROPOSED
R-38 CEILING/ATTIC INSULATION

500 SQ. FT ALLOWED PER IECC 402.2

WINDOW/DOORS THERMAL DATA

THERMAL PERFORMACE DATA FOR DOORS & WINDOWS

OPENING TYPE	U-VALUE	SHGC
CASEMENT WINDOWS	0.35	0.40
DOUBLE HUNG WINDOWS	0.35	0.40
FRENCH INSWINGING/ SLIDING DOORS	0.35	0.40
EXTERIOR SWINGING DOORS	0.35	0.40

THE AREA-WEIGHTED AVERAGE MAXIMUM FENESTRATION U-FACTOR PERMITTED USING TRADE-OFFS FROM SECTION 402.1 IN ZONE 4 SHALL BE .35 FOR VERTICAL FENESTRATION AND .55 FOR SKYLITES

ENERGY CONSERVATION NOTES

1. The following provisions for thermal resistance meet or exceed the requirements stipulated by the International Energy Conservation Code.
2. INSULATION: IRC

CEILING (OF UPPERMOST STORY)	R-49 W/ 500SF R-30 ALLOWANCE, OR R-38 CONTINUOUS
VAULTED CEILING	R-38
EXTERIOR FRAME WALLS	R-20 OR 13+5 (EXTERIOR)
RIM JOISTS	EQUAL TO WALL BELOW
FLOORS OVER UNHEATED SPACES (INCLUDING FLOOR OVERHANGS)	R-38
MASONRY WALLS (ENCLOSED HEATED LIVING AREAS)	R-13 OR R-10 CONTINUOUS
SLAB ON GRADE (HEATED SPACE) 24" PERIMETER INSULATION	R-10
WINDOWS	0.32 U FACTOR, 0.40 SHGC
DOORS	SEE SECTION R402.3.4

*ALL VALUES ARE TYPICAL UNLESS NOTED OTHERWISE IN ARCHITECTURAL DRAWINGS

3. Air Infiltration:
A. Windows: not exceeding five tenths (0.5) CFM of sash crack.
B. Sliding Glass Doors: not exceeding five tenths (0.5) CFM per foot of door area.
C. Swinging Doors: not exceeding one and twenty-five hundredths (1.25) CFM per square foot of door area.
Provide 1" fiberglass sill sealer between foundation wall and all sill plates.
D. In order to seal between dissimilar materials to allow for differential expansion and contraction, the following shall be caulked, gasketed, weatherstripped or otherwise sealed with an air barrier material, suitable film or solid material:

1. All joints, seams, and penetrations
2. Site-built windows, doors, and skylites
3. Openings between window and door assemblies and their respective jambs & framing
4. Utility penetrations
5. Dropped ceilings or chases adjacent to the thermal envelope
6. Knee walls
7. Walls and ceilings separating a garage from conditioned spaces
8. Behind tubs and showers on exterior walls
9. Common walls between dwelling units
10. Attic access openings
11. Rim joist junction
12. Other sources of infiltration

HVAC SYSTEMS & WATER HEATING

1. HEATING & COOLING EQUIP. CONTROLS. AT LEAST ONE PRE-PROGRAMMED PROGRAMMABLE THERMOSTAT IS REQUIRED WHEN USING A FORCED AIR SYSTEM. SEPARATE THERMOSTATS ARE REQUIRED FOR EACH HEATING/COOLING ZONE IN THE DWELLING.

2. DUCT INSULATION. SUPPLY DUCTS LOCATED OUTSIDE THE BUILDING THERMAL ENVELOPE SHALL BE INSULATED TO MINIMUM R-8, ALL OTHER DUCTS INSULATED TO A MINIMUM OF R-6

3. DUCT SEALING. ALL DUCTS, AIR HANDLERS, FILTER BOXES, & BUILDING CAVITIES MUST BE SEALED. JOINTS & SEAMS SHALL COMPLY W/ M1606.4.1 IRC

4. MECHANICAL SYSTEM PIPING INSULATION. R-3 FOR PIPING CARRYING FLUIDS AT >105°F OR <55°F IS REQUIRED

5. MECHANICAL VENTILATION. OUTDOOR AIR INTAKES OR EXHAUSTS SHALL HAVE DAMPERS

6. SERVICE WATER HEATING. PIPING IN THE CIRCULATING HOT WATER SYSTEM SHALL BE INSULATED TO AN R-3 AND SYSTEM TO INCLUDE MANUAL OR AUTOMATIC SWITCH THAT CAN TURN OFF THE SYSTEM WHEN IT IS NOT USED, WATER HEATERS WITH PIPE RISERS SHALL HAVE HEAT TRAPS ON BOTH INLET AND OUTLET OF WATER HEATER UNLESS THE WATER HEATER HAS INTEGRAL HEAT TRAPS OR IS PART OF A CIRCULATION SYSTEM. TYPICAL METHODS USED FOR CREATING HEAT TRAPS ARE "U" OR "RAMS HORN" BENDS IN THE FLEXIBLE PIPE CONNECTORS OR INSTALLING AFTERMARKET PIPE NIPPLES WITH INTEGRAL TRAPS.

7. EQUIPMENT SIZING. HEATING AND COOLING EQUIPMENT SHALL BE SIZED BASED ON BUILDING LOADS CALCULATED IN ACCORDANCE WITH ACCA (AIR CONDITIONING CONTRACTORS OF AMERICA) MANUAL-J. A SIMPLIFIED METHOD OF CALCULATING HEATING AND COOLING LOADS. THE MANUAL-J CALCULATIONS SHALL BE SUBMITTED UPON APPLICATION FOR THE MECHANICAL PERMIT.

SECTION 302.1 OF IECC SPECIFIES THE INTERIOR DESIGN TEMPERATURES USED FOR HEATING AND COOLING LOAD CALCULATIONS AS MAXIMUM OF 72°F FOR HEATINGAND MINIMUM 75°F FOR COOLING.

LEGEND

INSULATION PERIMETER

AREA OF INSULATION ABOVE OR BELOW AS INDICATED

GTM ARCHITECTS

7735 OLD GEORGETOWN ROAD
SUITE 700
BETHESDA, MD 20814
(240)333-2000
(240)333-2001 FAX
WWW.GTMARCHITECTS.COM

Seal

I certify that these documents were prepared or approved by me, and that I am a duly licensed architect under the laws of the State of Maryland. License number 8888, Expiration Date: 12/31/2022.

Consultant

Project

21 HIGH STREET
LOT 3

Owner

Developer

PERMIT SET	4-11-2022

Issue Description	*Date*

GTM Project No.	18.0320
Checked By	GTM
Drawn By	LEO/DER
Scale	AS NOTED

Sheet Title

THERMAL ENERGY DIAGRAMS

Sheet No.

EC002

COPYRIGHT, 2022 GTM ARCHITECTS, INC.

FILE NAME:

Generated by RES*check-Web* Software

Compliance Certificate

Project Parcel 770, Lot C

Energy Code:	**2018 IECC**
Location:	**Brookeville, Maryland**
Construction Type:	**Single-family**
Project Type:	**New Construction**
Conditioned Floor Area:	**4,792 ft2**
Glazing Area	**19%**
Climate Zone:	**4 (5093 HDD)**
Permit Date:	
Permit Number:	

Construction Site:
Parcel 770
Lot C
Brookeville, MD

Owner/Agent:
Phil Sardelis
10776 Tucker Street
Beltsville, MD 20705
240-417-5333
philsardelis@gmail.com

Designer/Contractor:
Luke Olson
GTM Architects
7735 Old Georgetown Road
Bethesda, MD 20814
240-333-2021
lolson@gtmarchitects.com

Compliance: Passes using UA trade-off

Compliance: **2.7% Better Than Code** Maximum UA: **448** Your UA: **436** Maximum SHGC: **0.40** Your SHGC: **0.23**

The % Better or Worse Than Code Index reflects how close to compliance the house is based on code trade-off rules.
It DOES NOT provide an estimate of energy use or cost relative to a minimum-code home.

Envelope Assemblies

Assembly	Gross Area or Perimeter	Cavity R-Value	Cont. R-Value	Prop. U-Factor	Req. U-Factor	Prop. UA	Req. UA
Ceiling: Flat Ceiling or Scissor Truss	1,390	49.0	0.0	0.026	0.026	36	36
Wall: Wood Frame, 16" o.c.	1,530	20.0	0.0	0.059	0.060	70	71
Door: Glass Door (over 50% glazing) SHGC: 0.23	132			0.310	0.320	41	42
Window: Wood Frame SHGC: 0.23	208			0.310	0.320	64	67
Wall 1: Wood Frame, 16" o.c.	1,395	20.0	0.0	0.059	0.060	71	72
Window 1: Wood Frame SHGC: 0.23	198			0.310	0.320	61	63
Basement: Solid Concrete or Masonry Wall height: 8.8' Depth below grade: 7.8' Insulation depth: 8.8'	1,518	13.0	0.0	0.057	0.059	85	88
Window: Wood Frame SHGC: 0.23	27			0.310	0.320	8	9

Project Title: Parcel 770, Lot C
Data filename:

Report date: 08/20/21
Page 1 of 2

2018 IECC Energy Efficiency Certificate

Insulation Rating	R-Value	
Above-Grade Wall	20.00	
Below-Grade Wall	13.00	
Floor	0.00	
Ceiling / Roof	49.00	
Ductwork (unconditioned spaces):	_____	
Glass & Door Rating	**U-Factor**	**SHGC**
Window	0.31	0.23
Door	0.31	0.23
Heating & Cooling Equipment	**Efficiency**	
Heating System:_____	_____	
Cooling System:_____	_____	
Water Heater:_____	_____	

Name: _____ Date:_____

Comments

GTM ARCHITECTS

7735 OLD GEORGETOWN ROAD
SUITE 700
BETHESDA, MD 20814
(240)333-2000
(240)333-2001 FAX
WWW.GTMARCHITECTS.COM

GTM

Seal

I certify that these documents were prepared or approved by me, and that I am a duly licensed architect under the laws of the State of Maryland, license number 8385. Expiration Date: 12-06-2022.

Consultant

Project
21 HIGH STREET
LOT 3

Owner

Developer

PERMIT SET	4-11-2022
Issue Description	Date

GTM Project No.	18.0320
Checked By	GTM
Drawn By	LEO/DER
Scale	AS NOTED

Sheet Title
ENERGY CALCS

Sheet No.
EC003

COPYRIGHT, 2022 GTM ARCHITECTS, INC.

FILE NAME:

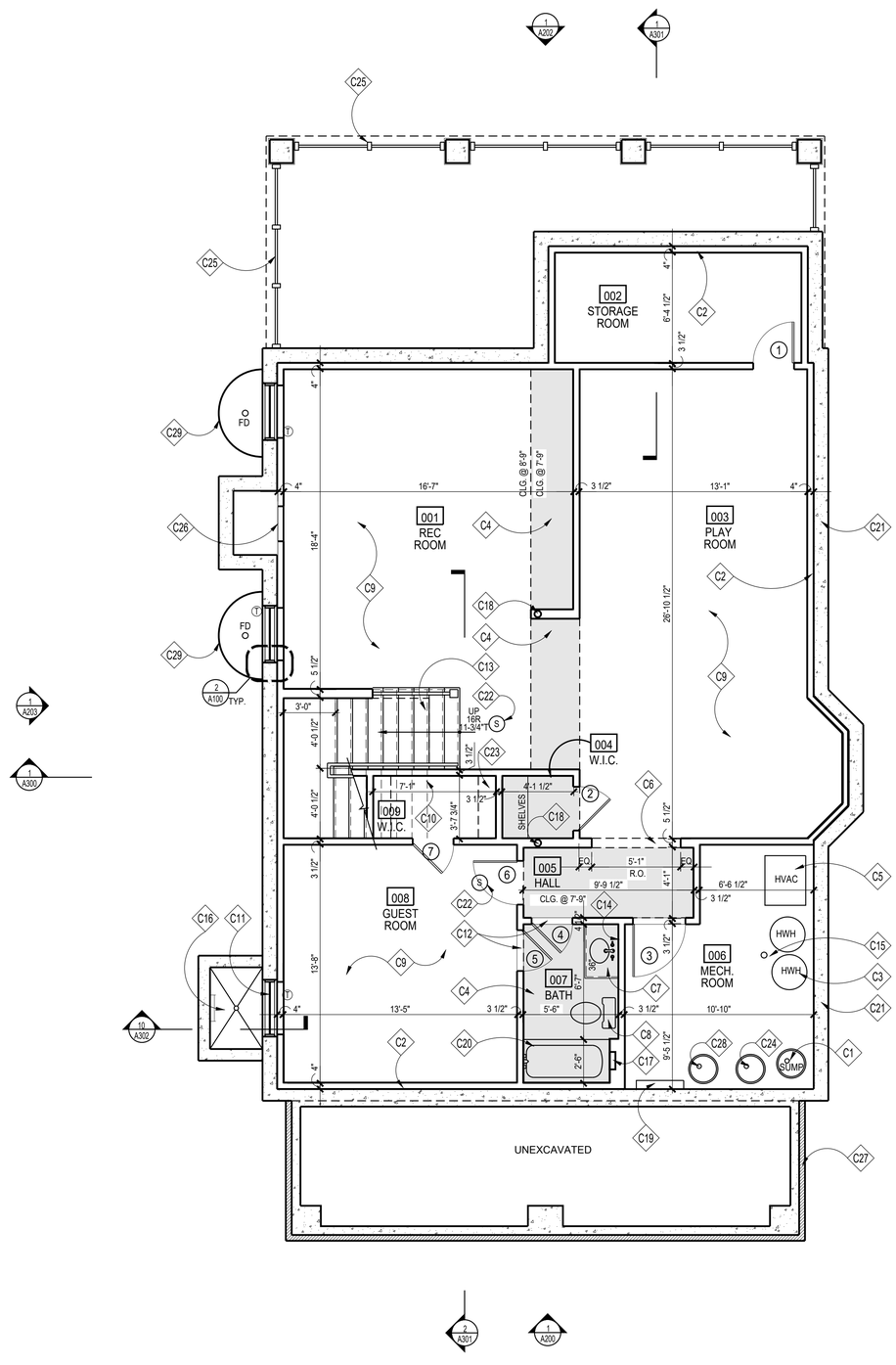

1 BASEMENT PLAN
SCALE: 1/4"=1'=0

PLAN NORTH

CONSTRUCTION NOTES

- C1 SUMP PUMP WITH BATTERY POWERED SUMP BACKUP; LOCATION T.B.D.
- C2 FUR OUT WALLS W/ FULL 2x4's W/ R-13 BATT INSULATION, TYP.; PROVIDE P.T. SILL; HOLD 1/2" OFF MASONRY WALL
- C3 HOT WATER HEATER, LOCATION APPROXIMATE, SEE SHEET '002'
- C4 TONED AREA INDICATES LOWERED CEILING TO ALLOW FOR DUCTWORK, BEAMS AND/OR AESTHETIC APPEAL
- C5 HVAC, SEE SHEET '002'
- C6 CASED OPENING @ 6'-8" FINISHED
- C7 VANITY W/ SINK, FAUCET & COUNTERTOP; T.B.S.
- C8 PLUMBING FIXTURES & ACCESSORIES T.B.S.
- C9 REINF. CONC. SLAB ON GRADE; SEE FOUNDATION PLAN
- C10 PROVIDE CLOSET ROD & SHELF
- C11 EGRESS WINDOW; MAX. 44" SILL HEIGHT FROM A.F.F.
- C12 MARBLE THRESHOLD T.B.S.
- C13 WD. STEPS; 1x RISERS W/ TREADS TO MATCH H.W.F.; WOOD RAILING T.B.S, SEE DETAILS '1, 6/A302', FOLLOW IRC 2018 R311.7 FOR STAIR AND RAILING
- C14 1/4" POLISHED PLATE GLASS MIRROR, T.B.S.
- C15 DRAIN FOR HWH & HVAC. LOCATION T.B.D., RUN TO SUMP PUMP
- C16 WINDOW WELL; EGRESS LADDER & COVER AS REQ'D. BY CODE DRAIN TO SUMP PUMP OR DAYLIGHT
- C17 12" W x 14" H TILED RECESS w/ SLOPED SILL @ 42" A.F.F.
- C18 STEEL COLUMN, SEE FOUNDATION AND FRAMING PLANS
- C19 APPROXIMATE ELECTRICAL PANEL LOCATION; FIELD VERIFY FINAL LOCATION
- C20 TUB & SHOWER FLOORS AND WALLS SHALL BE FINISHED W/ A NON-ABSORBENT SURFACE AT LEAST 6" ABOVE THE FLOOR, PER IRC 2018
- C21 TONED WALL INDICATES EXTENT OF REVERSE LEDGE; SEE FOUNDATION & FRAMING PLANS
- C22 INSTALL INTERCONNECTED & HARD-WIRED SMOKE DETECTORS/ SMOKE & CARBON MONOXIDE DETECTORS IN ACCORDANCE W/ IRC 2018
- C23 (5) EQUALLY SPACED SHELVES, FLOOR TO CEILING, PTD.
- C24 RADON MITIGATION PIPE, SEE SPECIFICATIONS SHEET FOR DETAILS
- C25 PTD. CEDAR LATTICE PANEL TO MATCH EXG., SEE DETAIL 5/A304
- C26 ACCESS PANEL PER IRC 2018
- C27 STONE VENEER TBS, SEE ELEVATIONS
- C28 EJECTOR PUMP PER CIVIL
- C29 PREFABRICATED WINDOW WELL, PROVIDE GRAVEL BASE AND DRAIN TO SUMP OR DAYLIGHT

NOTE:

1. UNLESS INDICATED OTHERWISE, DIMENSIONS ARE TO FACE OF FRAMING
2. VERIFY ALL EXTERIOR RISER + TREAD DIMENSIONS IN THE FIELD
3. SEE DETAILS '2&7/A302' FOR ENERGY EFFICIENT FRAMING DETAILS
4. PROVIDE MINERAL WOOL SOUND INSULATION IN WALLS, CEILING, + FLOOR OF THE FOLLOWING ROOMS (U.N.O.):

   006 MECHANICAL ROOM
   007 BATH

5. Ⓣ = TEMPERED GLASS

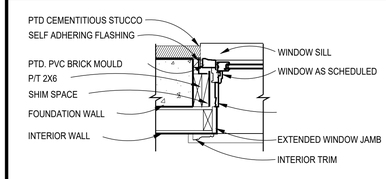

2 TYP. BASEMENT WINDOW/DOOR JAMB
Scale: 1"=1'-0"

WALL TYPES

TYPICAL NEW EXTERIOR WALL: 10" CONC. WALL; SEE FOUNDATION PLAN; FUR WHERE SHOWN WITH 2x4 STUDS @ 16" O.C.,
(SEE THERMAL ENVELOPE, SHEET "EC001" FOR INSULATION INFORMATION)

TYPICAL NON-BEARING INTERIOR PARTITION: 2"x4" STUDS 16" O.C. W/ ½" GYP. BD. EACH SIDE; INCREASE WALL THICKNESS AS SHOWN TO ALIGN FINISHES WHERE SHOWN

GTM ARCHITECTS

7735 OLD GEORGETOWN ROAD
SUITE 700
BETHESDA, MD 20814
(240)333-2000
(240)333-2001 FAX
WWW.GTMARCHITECTS.COM

Seal

I certify that these documents were prepared or approved by me, and that I am a duly licensed architect under the laws of the State of Maryland License No. 30200, Expiration Date: 01/06/2023.

Consultant

Project

21 HIGH STREET
LOT 3

Owner

Developer

PERMIT SET	4-11-2022

Issue Description	*Date*

GTM Project No.	18.0320
Checked By	GTM
Drawn By	LEO/DER
Scale	AS NOTED

Sheet Title

BASEMENT PLAN

Sheet No.

A100

COPYRIGHT, 2022 GTM ARCHITECTS, INC.

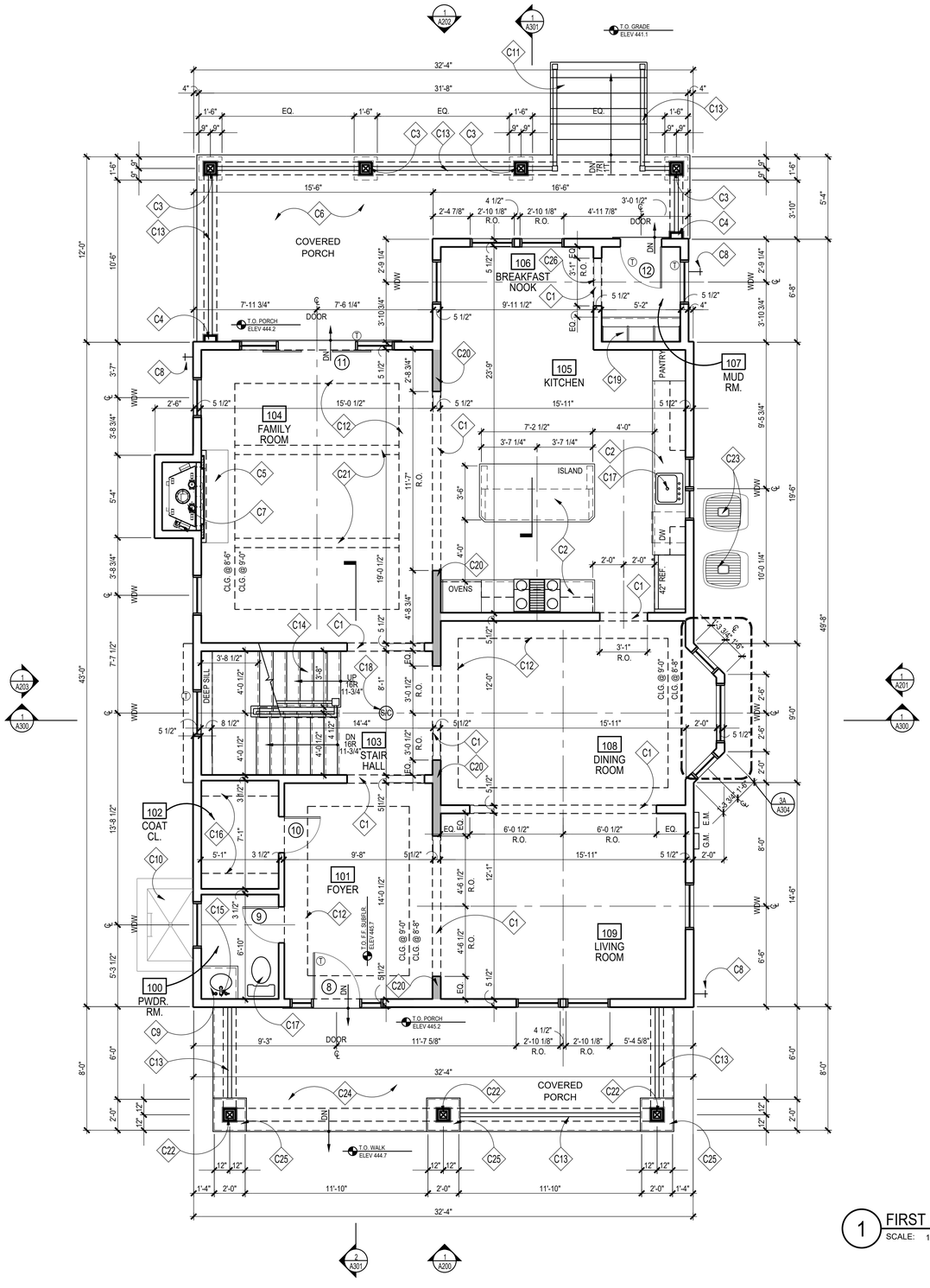

1 FIRST FLOOR PLAN
SCALE: 1/4"=1'=0

PLAN NORTH

CONSTRUCTION NOTES

- C1 CASED OPENING @ 8'-0" FINISHED
- C2 KITCHEN CABINETS, APPLIANCES + COUNTER TOPS, ETC. T.B.S.
- C3 SQUARE COLUMN, BUILT UP FROM 2x10's, PTD. (WRAP 6x6 POST) OR 10" SQ. HB&G PERMACAST COLUMN CUT FROM 9'-0" STOCK W/ TUSCAN BASE AND CAPITAL
- C4 PTD. PILASTER TO MATCH COLUMNS; SEE ELEVATIONS
- C5 HEARTH, MATERIAL T.B.S.
- C6 COMPOSITE DECKING MATERIAL, STYLE/COLOR T.B.S.
- C7 B-VENT GAS FIREPLACE, T.B.S. INSTALL PER MANUFACTURER REQUIREMENTS
- C8 FROST PROOF HOSE BIB BELOW; CONFIRM LOCATION
- C9 PEDESTAL SINK, T.B.S.
- C10 EGRESS WINDOW WELL W/ HINGED GRATE; SEE DETAIL '10/A302'
- C11 COMPOSITE TREADS, T.B.S., F.V. RISE/RUN
- C12 OPTIONAL TRAY CEILING ABOVE, SEE PLAN FOR HEIGHTS
- C13 PROVIDE HANDRAIL/GUARDRAIL TO COMPLY W/ IRC 2018
- C14 WD. STEPS; 1x RISERS W/ TREADS TO MATCH H.W.F.; WOOD RAILING T.B.S, SEE DETAILS '1,6/A302', FOLLOW IRC 2018 FOR STAIR AND RAILING
- C15 1/4" POLISHED PLATE GLASS MIRROR, T.B.S.
- C16 PROVIDE CLOSET ROD & SHELF
- C17 PLUMBING FIXTURES & ACCESSORIES T.B.S.
- C18 HARD-WIRED SMOKE DETECTOR/CARBON MONOXIDE COMBO UNIT PER IRC 2018
- C19 BUILT-IN BENCH W/ LOCKERS & HOOKS; SEE TYP DETAIL ON '10/A303'
- C20 DARKER TONED WALL INDICATES 2x6 LOAD BEARING WALL @ 16" O.C.
- C21 OPTIONAL BEAMS ABOVE, T.B.D.
- C22 TAPERED SQ. HB&G PERMACAST COLUMN W/ TUSCAN BASE AND CAPITAL
- C23 CONDENSOR UNIT LOCATION APPROXIMATE
- C24 FLAGSTONE @ PORCH, T.B.S
- C25 BRICK PIER W/ SLOPED STONE CAP BELOW
- C26 MARBLE THRESHOLD, T.B.S.; SEE DETAIL '5/A302'

NOTE:

1. UNLESS INDICATED OTHERWISE, DIMENSIONS ARE TO FACE OF FRAMING
2. VERIFY ALL EXTERIOR RISER + TREAD DIMENSIONS IN THE FIELD
3. SEE DETAILS '2&7/A302' FOR ENERGY EFFICIENT FRAMING DETAILS
4. PROVIDE MINERAL WOOL SOUND INSULATION IN WALLS, CEILING, + FLOOR OF THE FOLLOWING ROOMS (U.N.O.):
   100 POWDER ROOM
5. Ⓣ = TEMPERED GLASS

WALL TYPES

TYPICAL NEW EXTERIOR WALL; 2x6 WOOD STUDS 16" O.C., W/ INSULATION (SEE THERMAL ENVELOPE, SHEET "EC001" FOR INSULATION LOCATION & INFORMATION) W/ , ½" EXTERIOR SHEATHING, AIR & WATER RESISTIVE BUILDING WRAP, & SIDING; SEE ELEVATIONS. INTERIOR FINISH TO BE ½" GYP. BD.

TYPICAL NON-BEARING INTERIOR PARTITION; U.N.O. 2x4 WOOD STUDS 16" O.C. W/ ½" GYP. BD. EACH SIDE, INCREASE WALL THICKNESS AS SHOWN TO ALIGN FINISHES WHERE SHOWN

GTM ARCHITECTS

7735 OLD GEORGETOWN ROAD
SUITE 700
BETHESDA, MD 20814
(240)333-2000
(240)333-2001 FAX
WWW.GTMARCHITECTS.COM

Seal

I certify that these documents were prepared or approved by me, and that I am a duly licensed architect under the laws of the State of Maryland, license number 8385, Expiration Date: 12-06-2022.

Consultant

Project
21 HIGH STREET
LOT 3

Owner

Developer

Issue Description	Date
PERMIT SET	4-11-2022

GTM Project No.	18.0320
Checked By	GTM
Drawn By	LEO/DER
Scale	AS NOTED

Sheet Title
FIRST FLOOR PLAN

Sheet No.
A101

COPYRIGHT, 2022 GTM ARCHITECTS, INC.

FILE NAME:

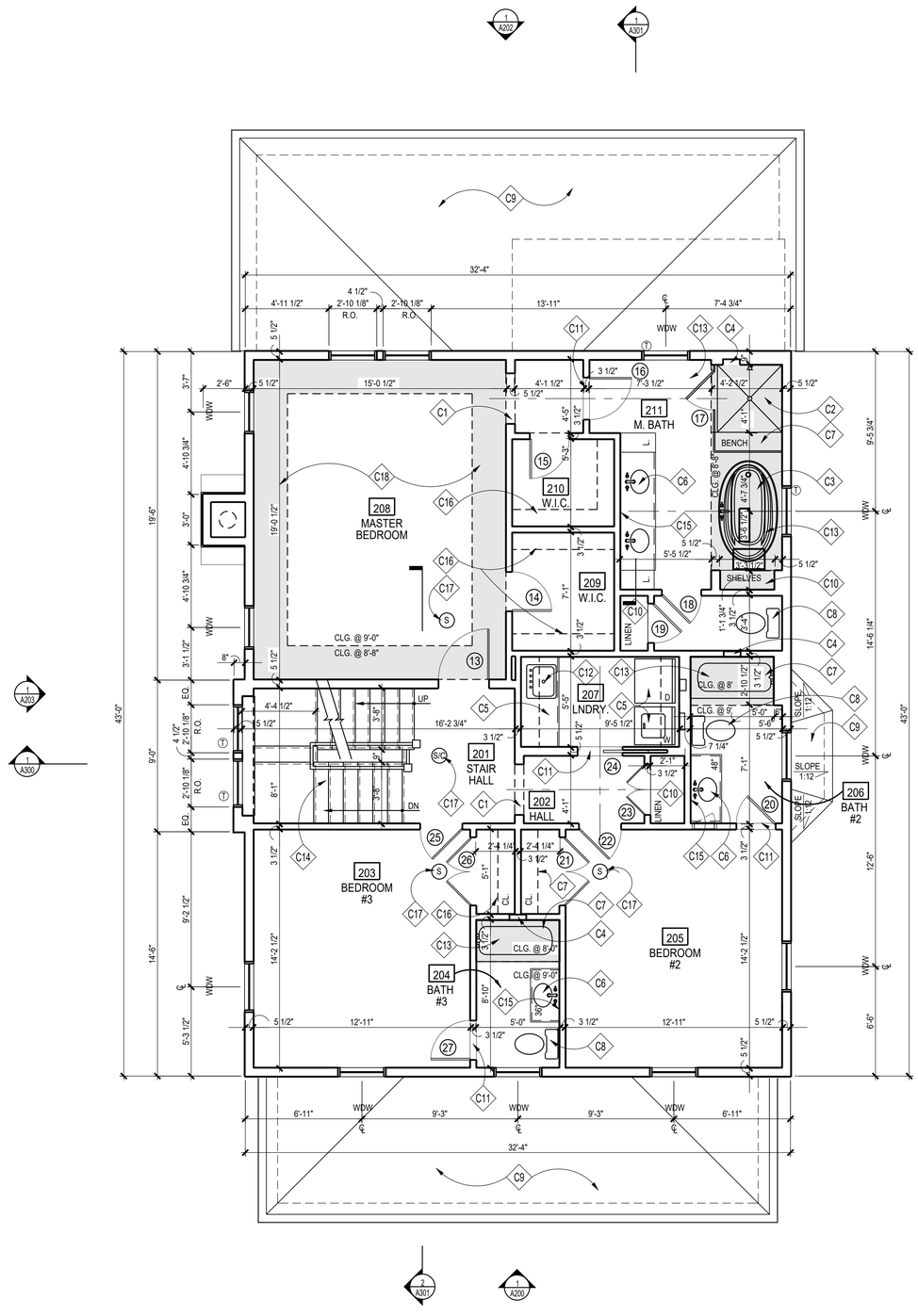

1 SECOND FLOOR PLAN
SCALE: 1/4"=1'=0

PLAN NORTH

CONSTRUCTION NOTES

- C1 CASED OPENING @ 7'-0" FINISHED
- C2 TILED SHOWER AND TILED BENCH; REFER TO DETAIL '16,17/A302', W/ TEMPERED GLASS ENCLOSURE & DOOR
- C3 SOAKING TUB WITHIN BUILT-IN DECK, T.B.S.
- C4 12" W x 14" H TILED RECESS w/ SLOPED SILL @ 42" A.F.F.
- C5 LAUNDRY ROOM CABINETS, APPLIANCES + COUNTER TOPS, ETC. T.B.S.; PROVIDE OVERFLOW PAN AND DRAIN UNDER WASHER
- C6 VANITY W/ SINK, FAUCET & COUNTERTOP; T.B.S.
- C7 TUB & SHOWER FLOORS AND WALLS SHALL BE FINISHED W/ A NON-ABSORBENT SURFACE AT LEAST 6" ABOVE THE FLOOR, PER IRC 2018
- C8 PLUMBING FIXTURES & ACCESSORIES T.B.S.
- C9 ROOF BELOW; SEE ROOF PLAN
- C10 PROVIDE (5) EQUALLY SPACED SHELEVES, PTD.
- C11 MARBLE THRESHOLD, T.B.S.; SEE DETAIL '5/A302'
- C12 OPTIONAL LAUNDRY SINK, T.B.S.
- C13 TONED AREA INDICATES LOWERED CEILING FOR AESTHETIC OR STRUCTURAL PURPOSES
- C14 WD. STEPS; 1x RISERS W/ TREADS TO MATCH H.W.F.; WOOD RAILING T.B.S, SEE DETAILS '1,6/A302', FOLLOW IRC 2018 FOR STAIR AND RAILING
- C15 1/4" POLISHED PLATE GLASS MIRROR, T.B.S.
- C16 PROVIDE CLOSET ROD & SHELF
- C17 HARD-WIRED SMOKE DETECTOR/CARBON MONOXIDE COMBO UNIT PER IRC 2018
- C18 OPTIONAL TRAY CEILING ABOVE, SEE PLAN FOR HEIGHTS

NOTE:

1. UNLESS INDICATED OTHERWISE, DIMENSIONS ARE TO FACE OF FRAMING
2. SEE DETAILS '2&7/A302' FOR ENERGY EFFICIENT FRAMING DETAILS
3. PROVIDE MINERAL WOOL SOUND INSULATION IN WALLS, CEILING, + FLOOR OF THE FOLLOWING ROOMS (U.N.O.):
   207 LAUNDRY ROOM
   211 MASTER BATH
   206 BATH #2
   204 BATH #3
4. Ⓣ = TEMPERED GLASS

WALL TYPES

TYPICAL NEW EXTERIOR WALL; 2x6 WOOD STUDS 16" O.C., W/ INSULATION (SEE THERMAL ENVELOPE, SHEET "EC001" FOR INSULATION LOCATION & INFORMATION) W/ , ½" EXTERIOR SHEATHING, AIR & WATER RESISTIVE BUILDING WRAP, & SIDING; SEE ELEVATIONS. INTERIOR FINISH TO BE ½" GYP. BD.

TYPICAL NON-BEARING INTERIOR PARTITION; U.N.O. 2x4 WOOD STUDS 16" O.C. W/ ½" GYP. BD. EACH SIDE, INCREASE WALL THICKNESS AS SHOWN TO ALIGN FINISHES WHERE SHOWN

GTM ARCHITECTS

7735 OLD GEORGETOWN ROAD
SUITE 700
BETHESDA, MD 20814
(240)333-2000
(240)333-2001 FAX
WWW.GTMARCHITECTS.COM

Seal

Consultant

Project
21 HIGH STREET
LOT 3

Owner

Developer

Issue Description	Date
PERMIT SET	4-11-2022

GTM Project No.	18.0320
Checked By	GTM
Drawn By	LEO/DER
Scale	AS NOTED

Sheet Title
SECOND FLOOR PLAN

Sheet No.
A102

COPYRIGHT, 2022 GTM ARCHITECTS, INC.

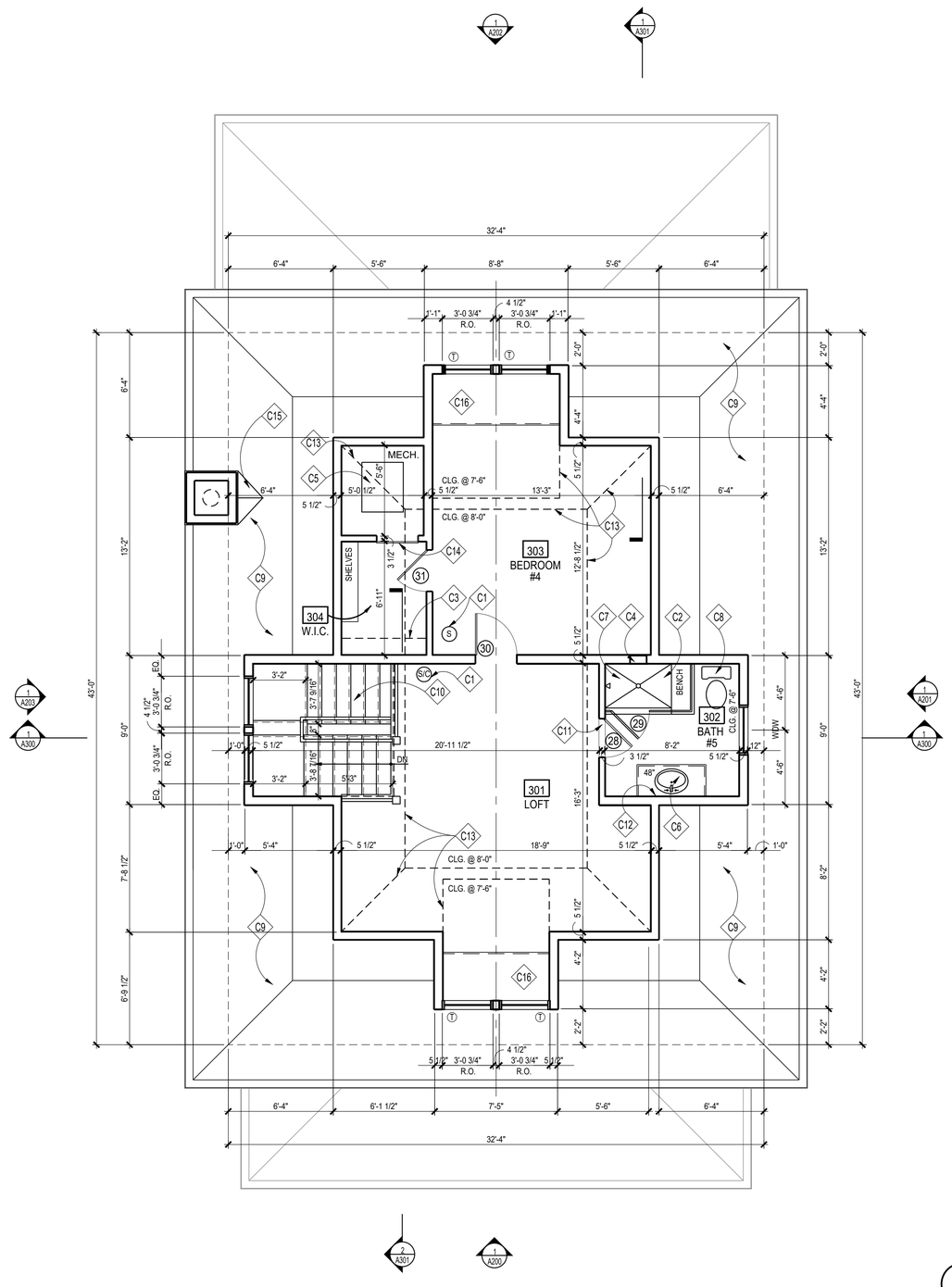

1 ATTIC PLAN
SCALE: 1/4"=1'=0

PLAN NORTH

CONSTRUCTION NOTES

- C1 HARD-WIRED SMOKE DETECTOR/CARBON MONOXIDE COMBO UNIT PER IRC 2018
- C2 TILED SHOWER; REFER TO DETAIL '16,17/A302', W/ TEMPERED GLASS ENCLOSURE & DOOR
- C3 PROVIDE CLOSET ROD & SHELF
- C4 12" W x 14" H TILED RECESS w/ SLOPED SILL @ 42" A.F.F. VERIFY IF IF RECESS CONFLICTS WITH GIRDER TRUSS
- C5 HVAC, SEE SHEET '002'
- C6 VANITY W/ SINK, FAUCET & COUNTERTOP; T.B.S.
- C7 TUB & SHOWER FLOORS AND WALLS SHALL BE FINISHED W/ A NON-ABSORBENT SURFACE AT LEAST 6" ABOVE THE FLOOR, PER IRC 2018
- C8 PLUMBING FIXTURES & ACCESSORIES T.B.S.
- C9 ROOF BELOW; SEE ROOF PLAN
- C10 WD. STEPS; 1x RISERS W/ TREADS TO MATCH H.W.F.; WOOD RAILING T.B.S, SEE DETAILS '1,6/A302', FOLLOW IRC 2018 FOR STAIR AND RAILING
- C11 MARBLE THRESHOLD, T.B.S.; SEE DETAIL '5/A302'
- C12 1/4" POLISHED PLATE GLASS MIRROR, T.B.S.
- C13 SLOPED CEILING ABOVE
- C14 ACCESS PANEL TO HVAC ROOM, F.V. HEIGHT
- C15 METAL CRICKET PER IRC. MIN 4:12 SLOPE
- C16 BUILT-IN BENCH SEAT, SEE 8/A305

NOTE:

1. UNLESS INDICATED OTHERWISE, DIMENSIONS ARE TO FACE OF FRAMING
2. SEE DETAILS '18-20/A304' FOR ENERGY EFFICIENT FRAMING DETAILS
3. PROVIDE MINERAL WOOL SOUND INSULATION IN WALLS, CEILING, + FLOOR OF THE FOLLOWING ROOMS (U.N.O.):
   MECHANICAL CLOSET
   BATH #5
4. Ⓣ = TEMPERED GLASS

GTM ARCHITECTS

7735 OLD GEORGETOWN ROAD
SUITE 700
BETHESDA, MD 20814
(240)333-2000
(240)333-2001 FAX
WWW.GTMARCHITECTS.COM

Seal

I certify that these documents were prepared or approved by me, and that I am a duly licensed architect under the laws of the State of Maryland, license number 8385, Expiration Date: 12-06-2022.

Consultant

Project
21 HIGH STREET
LOT 3

Owner

Developer

Issue Description	Date
PERMIT SET	4-11-2022

GTM Project No.	18.0320
Checked By	GTM
Drawn By	LEO/DER
Scale	AS NOTED

Sheet Title
ATTIC PLAN

Sheet No.
A103

COPYRIGHT, 2022 GTM ARCHITECTS, INC.

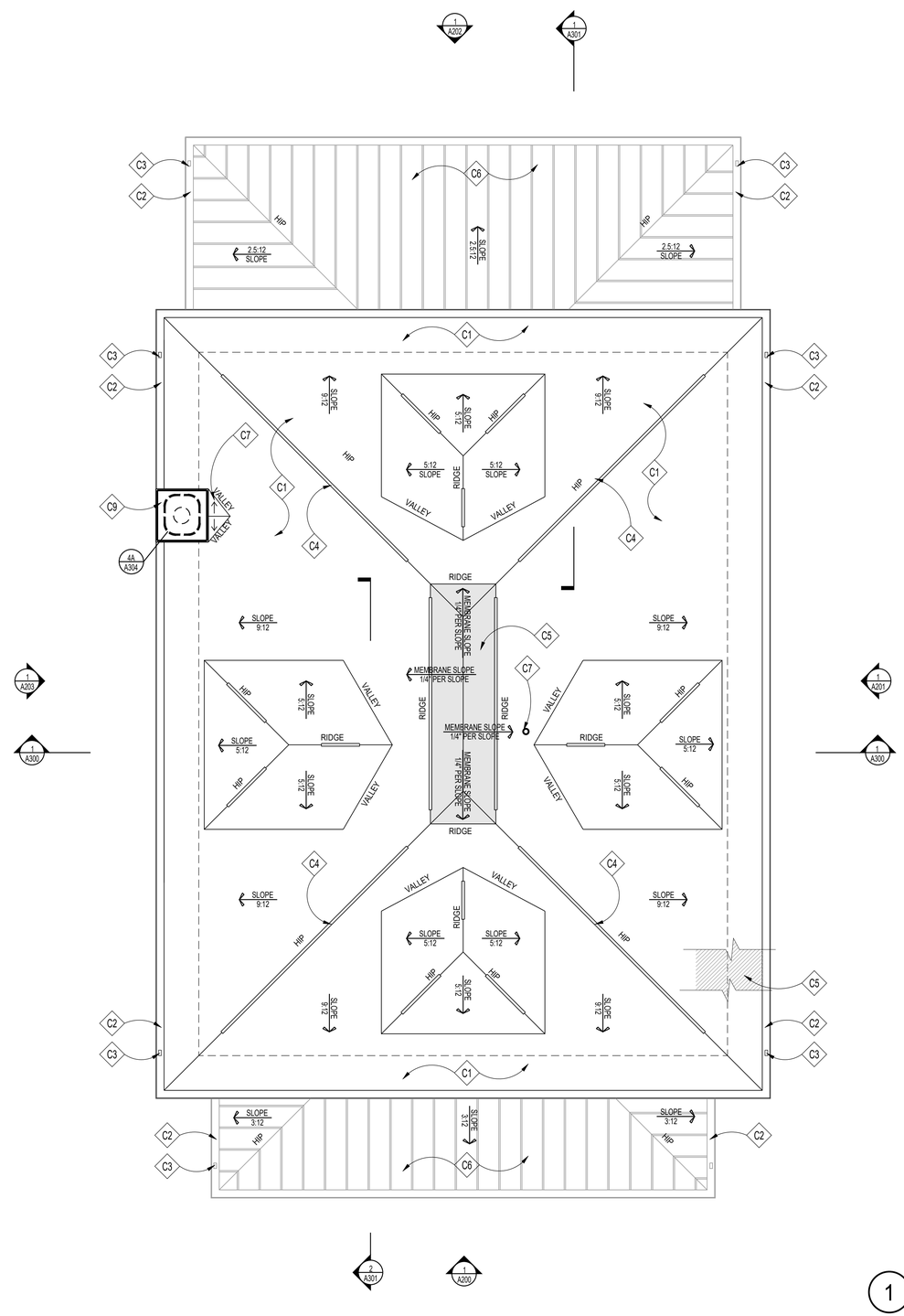

1 ROOF PLAN
SCALE: 1/4"=1'=0

PLAN NORTH

ROOFING NOTES

- C1 ROOF SHINGLES, COLOR AND STYLE T.B.S.
- C2 OGEE GUTTER T.B.S., TYP.
- C3 OGEE DOWNSPOUT T.B.S., TYP.
- C4 RIDGE/HIP VENTS BY COR-A-VENT OR APP'D EQUAL ELIMINATE WITH THE USE OF FOAM INSULATION
- C5 SEE NOTE #1 UNDER GENERAL ROOFING NOTES, TYP.
- C6 STANDING SEAM METAL ROOF BELOW, T.B.S.
- C7 RADON MITIGATION PIPE, SEE SPECIFICATIONS SHEET FOR DETAILS
- C8 RADON MITIGATION PIPE, SEE SPECIFICATIONS SHEET FOR DETAILS
- C9 STUCCO CHIMNEY FOR PRE-FABRICATED FIREPLACE W/ B-VENT FLUE & HIGH WIND TERMINATION CAP WITHIN DECORATIVE MTL. CHIMNEY POT TBS, SEE DETAIL 9/A302, CHIMNEY TO EXTEND 24" ABOVE ROOF WITHIN 10' PER IRC 2018

GENERAL ROOFING NOTES

1. PROVIDE SELF-ADHERING, 40 MIL ICE AND WATER GUARD UNDERLAYMENT UNDER SHINGLES AT ALL VALLEYS AND FROM LOWEST EDGE OF ROOF SURFACES TO A POINT AT LEAST 24" INSIDE THE EXTERIOR WALL LINE, AND ON ALL AREAS WITH A SLOPE LESS THAN 4:12.
2. SEE FRAMING PLAN FOR OVERBUILD AREAS
3. DOTTED LINE INDICATES LINE OF BUILDING BELOW

GTM ARCHITECTS

7735 OLD GEORGETOWN ROAD
SUITE 700
BETHESDA, MD 20814
(240)333-2000
(240)333-2001 FAX
WWW.GTMARCHITECTS.COM

Seal

I certify that these documents were prepared or approved by me, and that I am a duly licensed architect under the laws of the State of Maryland, license number 8385, Expiration Date: 12-06-2022.

Consultant

Project
21 HIGH STREET
LOT 3

Owner

Developer

Issue Description	Date
PERMIT SET	4-11-2022

GTM Project No.	18.0320
Checked By	GTM
Drawn By	LEO/DER
Scale	AS NOTED

Sheet Title
ROOF PLAN

Sheet No.
A104

COPYRIGHT, 2022 GTM ARCHITECTS, INC.

FILE NAME:

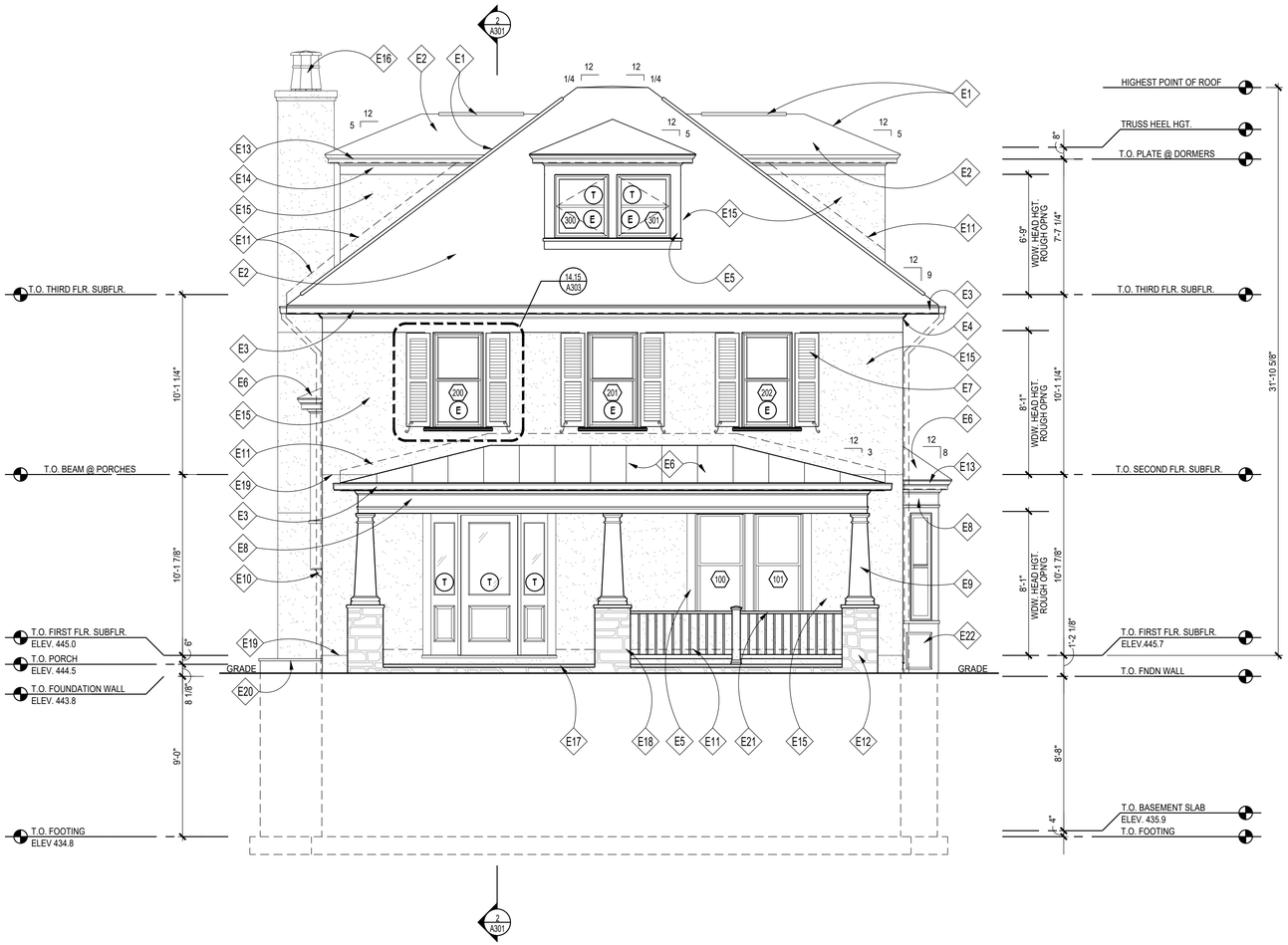

1 FRONT ELEVATION
SCALE: 1/4"=1'=0

ELEVATION NOTES

E1	RIDGE VENTS BY COR-A-VENT OR APPROVED EQUAL, TYP.; REMOVE IF USING SPRAY FOAM INSULATION, SEE DETAILS '12 & 19/A302'
E2	ROOFING T.B.S., SEE ROOF PLAN
E3	OGEE GUTTER (ON 1x6 PTD. FASCIA BD.) & DOWNSPOUT, T.B.S.
E4	PTD. WD 5/4x12 TRIM BAND W/ WM-47 CROWN, ALIGN W/ TOP OF WINDOWS
E5	PTD. WD 5/4x6 WINDOW/DOOR TRIM W/ PTD. WD HISTORIC SILL, TYP.;
E6	STANDING SEAM METAL ROOF, T.B.S.
E7	OPERABLE SOLID-CORE PTD. CEDAR SHUTTERS & HARDWARE, T.B.S., SEE DETAIL '15/A303'
E8	PTD. WD 5/4x TRIM BAND W/ WM-47 & WM-287; CUT TO FIT, ALIGN W/ TOP OF WINDOWS/DOORS AND PORCH COLUMNS
E9	TAPERED SQ. WD COLUMN W/ TUSCAN BASE AND CAPITAL
E10	PTD. TIMBERBUILD 23T1 WOOD CORBEL
E11	CONCEALED FLASHING & COUNTER FLASHING @ ALL VERTICAL TRANSITIONS, TYP. EXTEND MIN. 8" BEHIND SIDING. COLOR T.B.S.
E12	STONE VENEER, TO BE SELECTED
E13	PTD. 1x6 FASCIA BD. W/ WM-47 CROWN, SEE DETAIL '3/A303'
E14	PTD. 5/4x8 WD TRIM BAND W/ WM-49 CROWN, TYP.
E15	3-COAT PORTLAND CEMENT PLASTER (STUCCO) ON MTL. LATH, TYP.;PROVIDE SMOOTH FINISH, SEE STUCCO SPECIFICATIONS, SHEET A003; COLOR & TEXTURE T.B.S.
E16	STUCCO CHIMNEY FOR PRE-FABRICATED FIREPLACE W/ B-VENT FLUE & HIGH WIND TERMINATION CAP WITHIN DECORATIVE MTL. CHIMNEY POT TBS, SEE DETAIL 4/A304, CHIMNEY TO EXTEND 24" ABOVE ROOF WITHIN 10' PER IRC 2018
E17	STONE/FLAGSTONE PORCH & STEPS TO GRADE W/ STONE RISERS AND FLAGSTONE TREADS
E18	STONE VENEER PIERS WITH 2" SLOPE STONE CAP
E19	STUCCO EXPANSION JOINT, TYP.; SEE SPECIFICATIONS & DETAILS 14 & 15/A304, ALIGN HORIZONTAL JOINT WITH SUBFLOOR
E20	EGRESS WINDOW WELL PER IRC 2018 W/ SLOPED FLAGSTONE CAP
E21	PTD. 36" H. DECORATIVE WOOD RAILING
E22	PTD RECESSED PANEL, SEE DETAIL '18/A302'

NOTE:

1. VERIFY ALL EXTERIOR RISER & TREAD DIMENSIONS IN FIELD
2. ALL EXTERIOR WOOD TRIM TO BE TREATED FOR PROTECTION AGAINST MOISTURE, ROT, FUNGAL ATTACK & INSECTS, WINDSOR-ONE+, LIFESPAN OR EQ.
3. (T) = TEMPERED GLASS
   (E) = EGRESS

GTM ARCHITECTS

7735 OLD GEORGETOWN ROAD
SUITE 700
BETHESDA, MD 20814
(240)333-2000
(240)333-2001 FAX
WWW.GTMARCHITECTS.COM

Seal

I certify that these documents were prepared or approved by me, and that I am a duly licensed Architect under the laws of the State of Maryland, License number 6356, Expiration Date: 12-06-2022.

Consultant

Project

21 HIGH STREET
LOT 3

Owner

Developer

Issue Description	Date
PERMIT SET	4-11-2022

GTM Project No.	18.0320
Checked By	GTM
Drawn By	LEO/DER
Scale	AS NOTED

Sheet Title

FRONT ELEVATION

Sheet No.

A200

COPYRIGHT, 2022 GTM ARCHITECTS, INC.

FILE NAME:

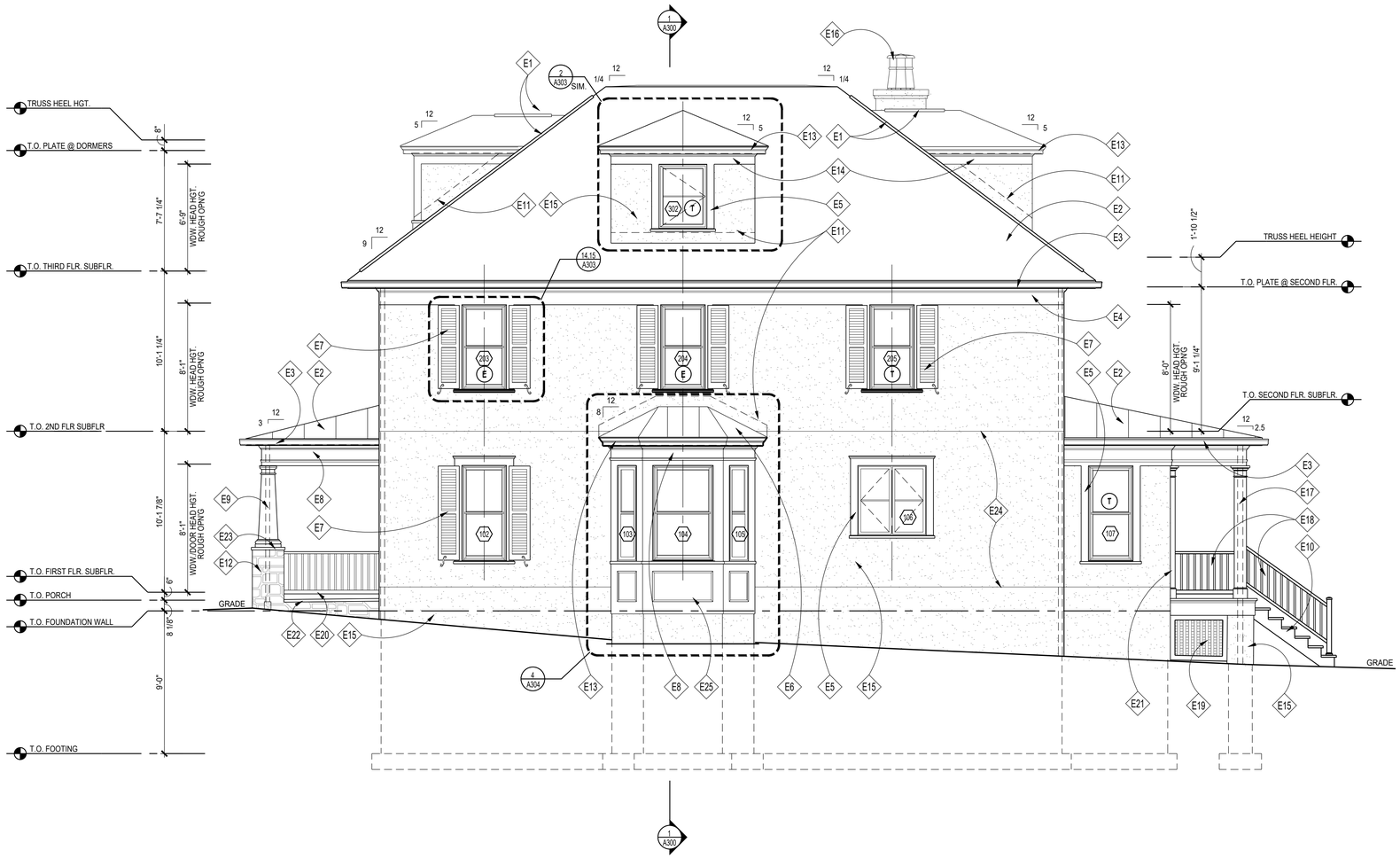

1 RIGHT SIDE ELEVATION
SCALE: 1/4"=1'=0

ELEVATION NOTES

E1	RIDGE VENTS BY COR-A-VENT OR APPROVED EQUAL, TYP.; REMOVE IF USING SPRAY FOAM INSULATION, SEE DETAILS '12 & 19/A302'
E2	ROOFING T.B.S., SEE ROOF PLAN
E3	OGEE GUTTER (ON 1x6 PTD. FASCIA BD.) & DOWNSPOUT, T.B.S.
E4	PTD. WD 5/4x12 TRIM BAND W/ WM-47 CROWN, ALIGN W/ TOP OF WINDOWS
E5	PTD. WD 5/4x6 WINDOW/DOOR TRIM W/ PTD. WD HISTORIC SILL, TYP.;
E6	STANDING SEAM METAL ROOF, T.B.S.
E7	OPERABLE SOLID-CORE PTD. CEDAR SHUTTERS & HARDWARE, T.B.S., SEE DETAIL '15/A303'
E8	PTD. WD 5/4x TRIM BAND W/ WM-47 & WM-287; CUT TO FIT, ALIGN W/ TOP OF WINDOWS/DOORS AND PORCH COLUMNS
E9	TAPERED SQ. WD COLUMN W/ TUSCAN BASE AND CAPITAL
E10	STAIRS TO GRADE, COMPOSITE WOOD RISERS & TREADS, F.V. RISE/RUN
E11	CONCEALED FLASHING & COUNTER FLASHING @ ALL VERTICAL TRANSITIONS, TYP. EXTEND MIN. 8" BEHIND SIDING. COLOR T.B.S.
E12	STONE VENEER, TO BE SELECTED
E13	PTD. 1x6 FASCIA BD. W/ WM-47 CROWN, SEE DETAIL '3/A303'
E14	PTD. 5/4x8 WD TRIM BAND W/ WM-49 CROWN, TYP.
E15	3-COAT PORTLAND CEMENT PLASTER (STUCCO) ON MTL. LATH, TYP.;PROVIDE SMOOTH FINISH, SEE STUCCO SPECIFICATIONS, SHEET A003; COLOR & TEXTURE T.B.S.
E16	STUCCO CHIMNEY FOR PRE-FABRICATED FIREPLACE W/ B-VENT FLUE & HIGH WIND TERMINATION CAP WITHIN DECORATIVE MTL. CHIMNEY POT TBS, SEE DETAIL 9/A302, CHIMNEY TO EXTEND 24" ABOVE ROOF WITHIN 10' PER IRC 2018
E17	SQUARE COLUMN, BUILT UP FROM 1x10's, PTD. (WRAP 6x6 POST) OR 10" SQ. WD COLUMN WRAP CUT FROM 9'-0" STOCK W/ TUSCANBASE AND CAPITAL
E18	PTD. WOOD HANDRAIL/GUARDRAIL PER IRC 2018
E19	PTD. WOOD LATTICE PANEL, SEE 5/A304
E20	PTD. 36" H. DECORATIVE WOOD RAILING
E21	PTD. WD PILASTER TO MATCH COLUMNS
E22	STONE/FLAGSTONE PORCH & STEPS TO GRADE W/ STONE RISERS AND FLAGSTONE TREADS
E23	STONE VENEER PIERS WITH 2" SLOPE STONE CAP
E24	STUCCO EXPANSION JOINT, TYP.; SEE SPECIFICATIONS & DETAILS 14 & 15/A304, ALIGN HORIZONTAL JOINT WITH SUBFLOOR
E25	PTD RECESSED PANEL, SEE DETAIL '18/A302'

NOTE:

1. VERIFY ALL EXTERIOR RISER & TREAD DIMENSIONS IN FIELD
2. ALL EXTERIOR WOOD TRIM TO BE TREATED FOR PROTECTION AGAINST MOISTURE, ROT, FUNGAL ATTACK & INSECTS, WINDSOR-ONE+, LIFESPAN OR EQ.
3. (T) = TEMPERED GLASS
   (E) = EGRESS

GTM ARCHITECTS

7735 OLD GEORGETOWN ROAD
SUITE 700
BETHESDA, MD 20814
(240)333-2000
(240)333-2001 FAX
WWW.GTMARCHITECTS.COM

Seal

I certify that these documents were prepared or approved by me, and that I am a duly licensed Architect under the laws of the State of Maryland, license number 8245, Expiration Date: 12-06-2022.

Consultant

Project

21 HIGH STREET LOT 3

Owner

Developer

Issue Description	Date
PERMIT SET	4-11-2022

GTM Project No.	18.0320
Checked By	GTM
Drawn By	LEO/DER
Scale	AS NOTED

Sheet Title

RIGHT SIDE ELEVATION

Sheet No.

A201

COPYRIGHT, 2022 GTM ARCHITECTS, INC.

FILE NAME:

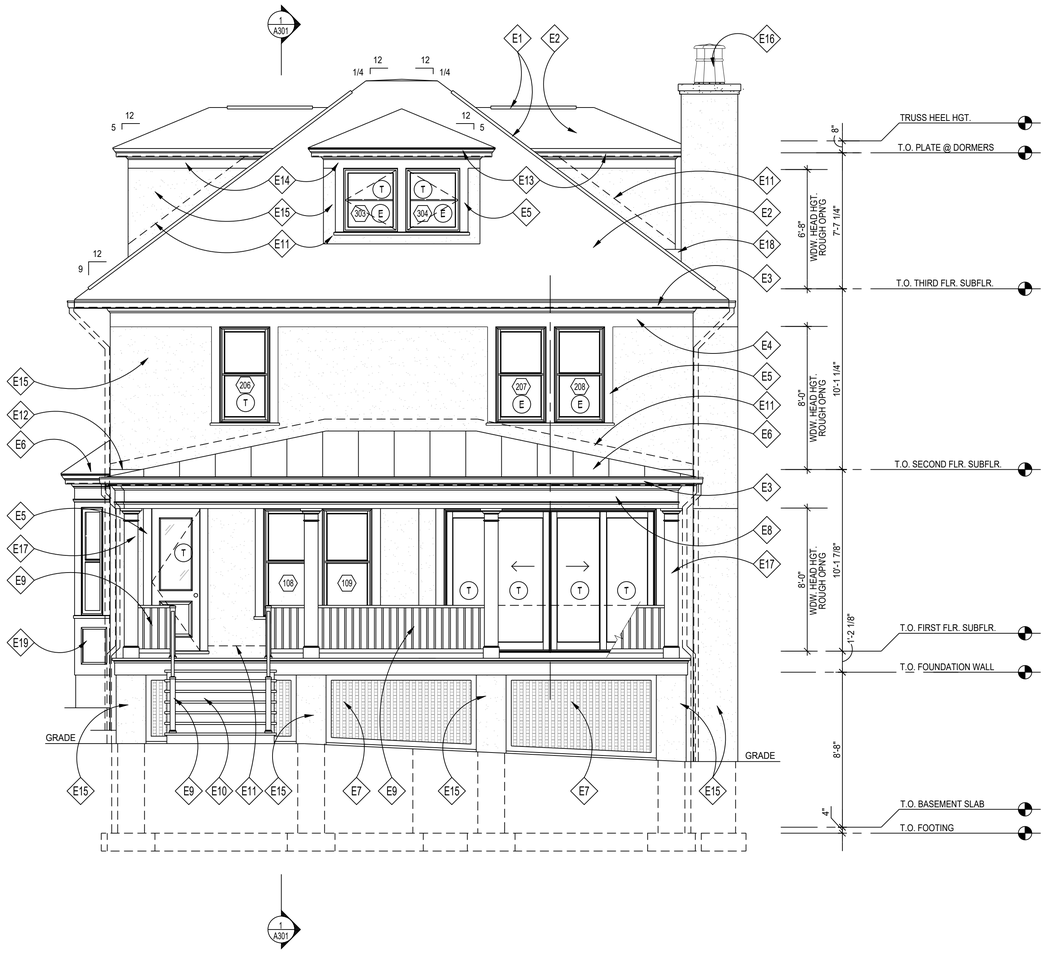

1 REAR ELEVATION
SCALE: 1/4"=1'=0

ELEVATION NOTES

- E1 RIDGE VENTS BY COR-A-VENT OR APPROVED EQUAL, TYP.; REMOVE IF USING SPRAY FOAM INSULATION, SEE DETAILS '12 & 19/A302'
- E2 ROOFING T.B.S., SEE ROOF PLAN
- E3 OGEE GUTTER (ON 1x6 PTD. FASCIA BD.) & DOWNSPOUT, T.B.S.
- E4 PTD. WD 5/4x12 TRIM BAND W/ WM-47 CROWN, ALIGN W/ TOP OF WINDOWS
- E5 PTD. WD 5/4x6 WINDOW/DOOR TRIM W/ PTD. WD HISTORIC SILL, TYP.;
- E6 STANDING SEAM METAL ROOF, T.B.S.
- E7 PTD. WOOD LATTICE PANEL, SEE 5/A304
- E8 PTD. WD 5/4x TRIM BAND W/ WM-47 & WM-287; CUT TO FIT, ALIGN W/ TOP OF WINDOWS/DOORS AND PORCH COLUMNS
- E9 PTD. WOOD HANDRAIL/GUARDRAIL PER IRC 2018
- E10 STAIRS TO GRADE, COMPOSITE WOOD RISERS & TREADS, F.V. RISE/RUN
- E11 CONCEALED FLASHING & COUNTER FLASHING @ ALL VERTICAL TRANSITIONS, TYP. EXTEND MIN. 8" BEHIND SIDING. COLOR T.B.S.
- E12 STUCCO EXPANSION JOINT, TYP.; SEE SPECIFICATIONS & DETAILS 14 & 15/A304, ALIGN HORIZONTAL JOINT WITH SUBFLOOR
- E13 PTD. 1x6 FASCIA BD. W/ WM-47 CROWN, SEE DETAIL '3/A303'
- E14 PTD. 5/4x8 WD TRIM BAND W/ WM-49 CROWN, TYP.
- E15 3-COAT PORTLAND CEMENT PLASTER (STUCCO) ON MTL. LATH, TYP.;PROVIDE SMOOTH FINISH, SEE STUCCO SPECIFICATIONS, SHEET A003; COLOR & TEXTURE T.B.S.
- E16 STUCCO CHIMNEY FOR PRE-FABRICATED FIREPLACE W/ B-VENT FLUE & HIGH WIND TERMINATION CAP WITHIN DECORATIVE MTL. CHIMNEY POT TBS, SEE DETAIL 9/A302, CHIMNEY TO EXTEND 24" ABOVE ROOF WITHIN 10' PER IRC 2018
- E17 SQUARE COLUMN, BUILT UP FROM 1x10's, PTD. (WRAP 6x6 POST) OR 10" SQ. WD COLUMN WRAP CUT FROM 9'-0" STOCK W/ TUSCANBASE AND CAPITAL
- E18 MTL CRICKET PER IRC, MIN 4:12 SLOPE
- E19 PTD RECESSED PANEL, SEE DETAIL '18/A302'

NOTE:

1. VERIFY ALL EXTERIOR RISER & TREAD DIMENSIONS IN FIELD
2. ALL EXTERIOR WOOD TRIM TO BE TREATED FOR PROTECTION AGAINST MOISTURE, ROT, FUNGAL ATTACK & INSECTS, WINDSOR-ONE+, LIFESPAN OR EQ.
3. Ⓣ = TEMPERED GLASS
   Ⓔ = EGRESS

GTM ARCHITECTS

7735 OLD GEORGETOWN ROAD
SUITE 700
BETHESDA, MD 20814
(240)333-2000
(240)333-2001 FAX
WWW.GTMARCHITECTS.COM

Seal

I certify that these documents were prepared or approved by me, and that I am a duly licensed architect under the laws of the State of Maryland, license number 8385, Expiration Date: 12-06-2022.

Consultant

Project
21 HIGH STREET
LOT 3

Owner

Developer

PERMIT SET	4-11-2022
Issue Description	Date

GTM Project No.	18.0320
Checked By	GTM
Drawn By	LEO/DER
Scale	AS NOTED

Sheet Title
REAR ELEVATION

Sheet No.
A202

COPYRIGHT, 2022 GTM ARCHITECTS, INC.

FILE NAME:

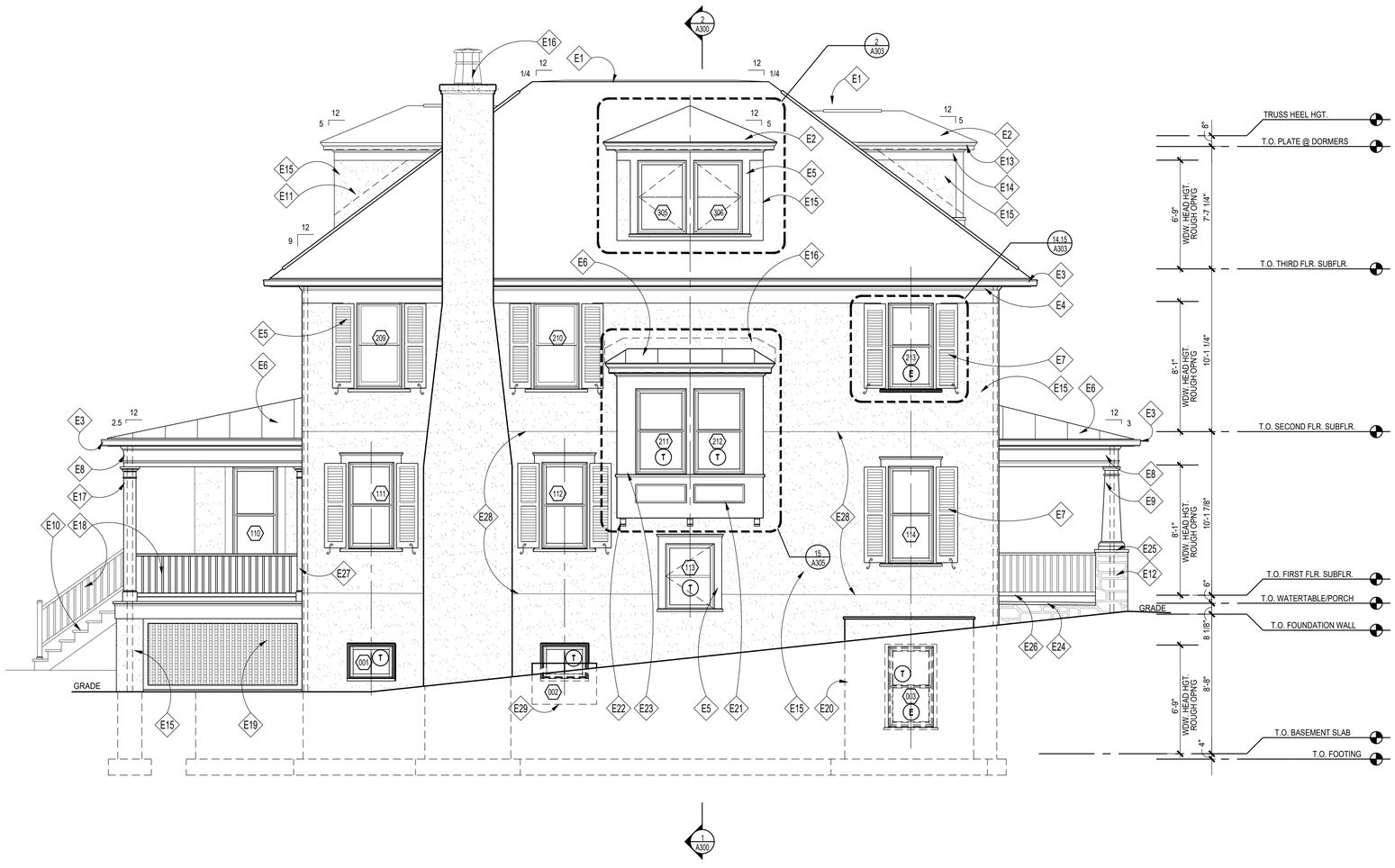

1 LEFT SIDE ELEVATION
SCALE: 1/4"=1'=0

ELEVATION NOTES

- E1 RIDGE VENTS BY COR-A-VENT OR APPROVED EQUAL, TYP.; REMOVE IF USING SPRAY FOAM INSULATION, SEE DETAILS '12 & 19/A302'
- E2 ROOFING T.B.S., SEE ROOF PLAN
- E3 OGEE GUTTER (ON 1x6 PTD. FASCIA BD.) & DOWNSPOUT, T.B.S.
- E4 PTD. WD 5/4x12 TRIM BAND W/ WM-47 CROWN, ALIGN W/ TOP OF WINDOWS
- E5 PTD. WD 5/4x6 WINDOW/DOOR TRIM W/ PTD. WD HISTORIC SILL, TYP.;
- E6 STANDING SEAM METAL ROOF, T.B.S.
- E7 OPERABLE SOLID-CORE PTD. CEDAR SHUTTERS & HARDWARE, T.B.S., SEE DETAIL '15/A303'
- E8 PTD. WD 5/4x TRIM BAND W/ WM-47 & WM-287; CUT TO FIT, ALIGN W/ TOP OF WINDOWS/DOORS AND PORCH COLUMNS
- E9 TAPERED SQ. WD COLUMN W/ TUSCAN BASE AND CAPITAL
- E10 STAIRS TO GRADE, COMPOSITE WOOD RISERS & TREADS, F.V. RISE/RUN
- E11 CONCEALED FLASHING & COUNTER FLASHING @ ALL VERTICAL TRANSITIONS, TYP. EXTEND MIN. 8" BEHIND SIDING. COLOR T.B.S.
- E12 STONE VENEER, TO BE SELECTED
- E13 PTD. 1x6 FASCIA BD. W/ WM-47 CROWN, SEE DETAIL '3/A303'
- E14 PTD. 5/4x8 WD TRIM BAND W/ WM-49 CROWN, TYP.
- E15 3-COAT PORTLAND CEMENT PLASTER (STUCCO) ON MTL. LATH, TYP.;PROVIDE SMOOTH FINISH, SEE STUCCO SPECIFICATIONS, SHEET A003; COLOR & TEXTURE T.B.S.
- E16 STUCCO CHIMNEY FOR PRE-FABRICATED FIREPLACE W/ B-VENT FLUE & HIGH WIND TERMINATION CAP WITHIN DECORATIVE MTL. CHIMNEY POT TBS, SEE DETAIL 9/A302, CHIMNEY TO EXTEND 24" ABOVE ROOF WITHIN 10' PER IRC 2018
- E17 SQUARE COLUMN, BUILT UP FROM 1x10's, PTD. (WRAP 6x6 POST) OR 10" SQ. WD COLUMN WRAP CUT FROM 9'-0" STOCK W/ TUSCANBASE AND CAPITAL
- E18 PTD. WOOD HANDRAIL/GUARDRAIL PER IRC 2018
- E19 PTD. WOOD LATTICE PANEL, SEE 5/A304
- E20 EGRESS WINDOW WELL PER IRC 2018 W/ SLOPED FLAGSTONE CAP
- E21 PTD RECESSED PANEL, SEE DETAIL '18/A302'
- E22 PTD. TIMBERBUILD 23T1 WOOD CORBEL
- E23 PTD. 5/4x CUT TO FIT WOOD TRIM
- E24 STONE/FLAGSTONE PORCH & STEPS TO GRADE W/ STONE RISERS AND FLAGSTONE TREADS
- E25 STONE VENEER PIER(S) WITH 2" SLOPE STONE CAP
- E26 PTD. 36" H. DECORATIVE WOOD RAILING
- E27 PTD. WD PILASTER TO MATCH COLUMNS
- E28 STUCCO EXPANSION JOINT, TYP.; SEE SPECIFICATIONS & DETAILS 14 & 15/A304, ALIGN HORIZONTAL JOINT WITH SUBFLOOR
- E29 PREFABRICATED WINDOW WELL, PROVIDE GRAVEL BASE AND DRAIN TO SUMP OR DAYLIGHT

NOTE:

1. VERIFY ALL EXTERIOR RISER & TREAD DIMENSIONS IN FIELD
2. ALL EXTERIOR WOOD TRIM TO BE TREATED FOR PROTECTION AGAINST MOISTURE, ROT, FUNGAL ATTACK & INSECTS, WINDSOR-ONE+, LIFESPAN OR EQ.
3. (T) = TEMPERED GLASS
   (E) = EGRESS

GTM ARCHITECTS

7735 OLD GEORGETOWN ROAD
SUITE 700
BETHESDA, MD 20814
(240)333-2000
(240)333-2001 FAX
WWW.GTMARCHITECTS.COM

Seal

I certify that these documents were prepared or approved by me, and that I am a duly licensed architect under the laws of the State of Maryland, License number 6305, Expiration Date: 12-06-2022.

Consultant

Project

21 HIGH STREET
LOT 3

Owner

Developer

PERMIT SET	4-11-2022
Issue Description	*Date*

GTM Project No.	18.0320
Checked By	GTM
Drawn By	LEO/DER
Scale	AS NOTED

Sheet Title

LEFT SIDE ELEVATION

Sheet No.

A203

COPYRIGHT, 2022 GTM ARCHITECTS, INC.

FILE NAME:

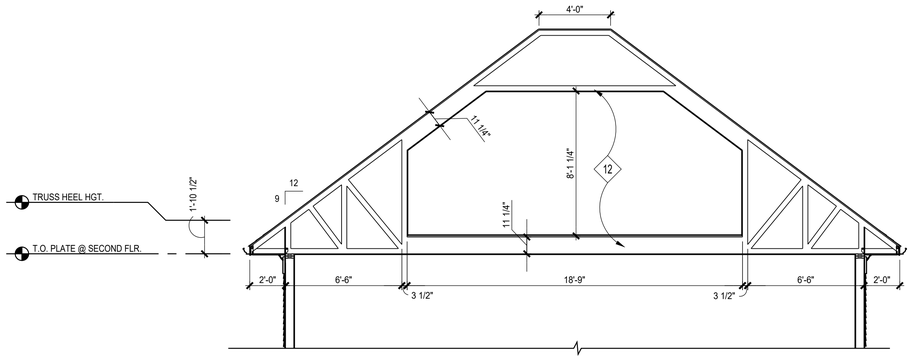

2 TRUSS DETAIL
SCALE: 1/4"=1'=0

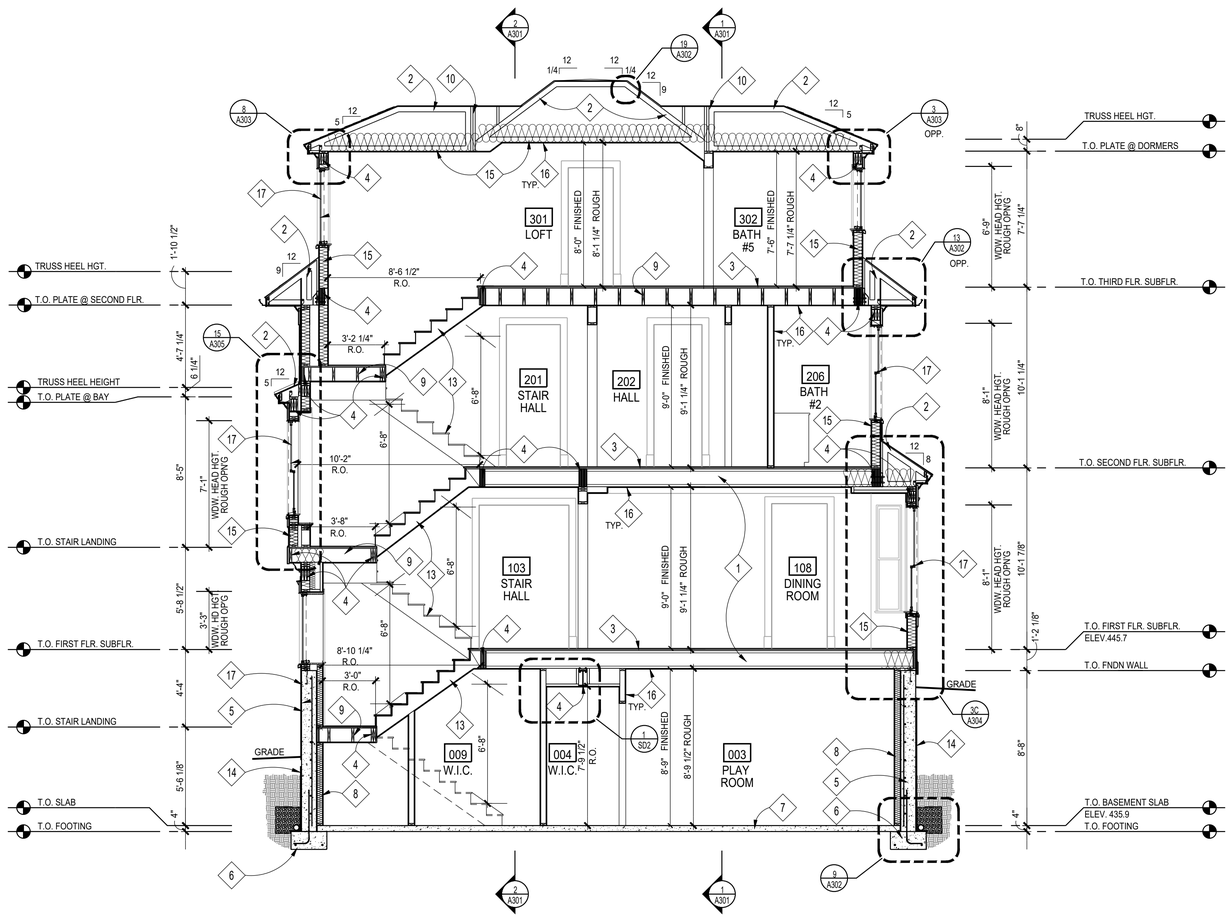

1 BUILDING SECTION @ STAIRS
SCALE: 1/4"=1'=0

CONSTRUCTION NOTES

1. FLOOR JOISTS; SEE FRAMING PLANS
2. ROOF TRUSSES BY TRUSS MANUFACTURER; SEE FRAMING PLANS
3. 3/4" T&G PLYWD. SUBFLOOR; GLUED & SCREWED
4. BEAM/ LINTEL/ HEADER; SEE FRAMING PLANS
5. CONCRETE FOUNDATION WALL; SEE FOUNDATION PLAN
6. FOOTING; SEE FOUNDATION PLAN
7. REINF. CONC. SLAB; SEE FOUNDATION PLAN
8. FUR OUT BASEMENT WALLS W/ 2x4's @ 16" O.C. & R-13 BATT INSULATION, TYP.
9. 2x INFILL FLOOR JOISTS, SEE FRAMING PLANS
10. GIRDER TRUSS BY TRUSS MANUFACTURER; SEE FRAMING PLANS
11. P.T. 2X DECK JOISTS, SEE FRAMING PLANS
12. ATTIC TRUSSES BY TRUSS MANUFACTURER; SEE FRAMING PLANS
13. STAIRCASE & RAILING; TREADS & RISERS, MATCH H.W.F., T.B.S., SEE DETAILS 1&6/A302 & 2,19&20/A304, FOLLOW IRC 2018, RAILING T.B.S.
14. WATERPROOFING AND DRAINAGE BD TO GRADE
15. INSULATION, SEE THERMAL ENVELOPE SHEET EC001
16. 1/2" GYP. BD
17. SCHEDULED WINDOW/DOOR

GTM ARCHITECTS

7735 OLD GEORGETOWN ROAD
SUITE 700
BETHESDA, MD 20814
(240)333-2000
(240)333-2001 FAX
WWW.GTMARCHITECTS.COM

Seal

STATE OF MARYLAND
LEO E. DER
No. 7245
ARCHITECT

I certify that these documents were prepared or approved by me, and that I am a duly licensed architect under the laws of the State of Maryland, license number 7245, Expiration Date: 12-06-2022.

Consultant

Project
21 HIGH STREET
LOT 3

Owner

Developer

PERMIT SET	4-11-2022
Issue Description	Date

GTM Project No.	18.0320
Checked By	GTM
Drawn By	LEO/DER
Scale	AS NOTED

Sheet Title
BUILDING SECTIONS

Sheet No.
A300

COPYRIGHT, 2022 GTM ARCHITECTS, INC.

FILE NAME:

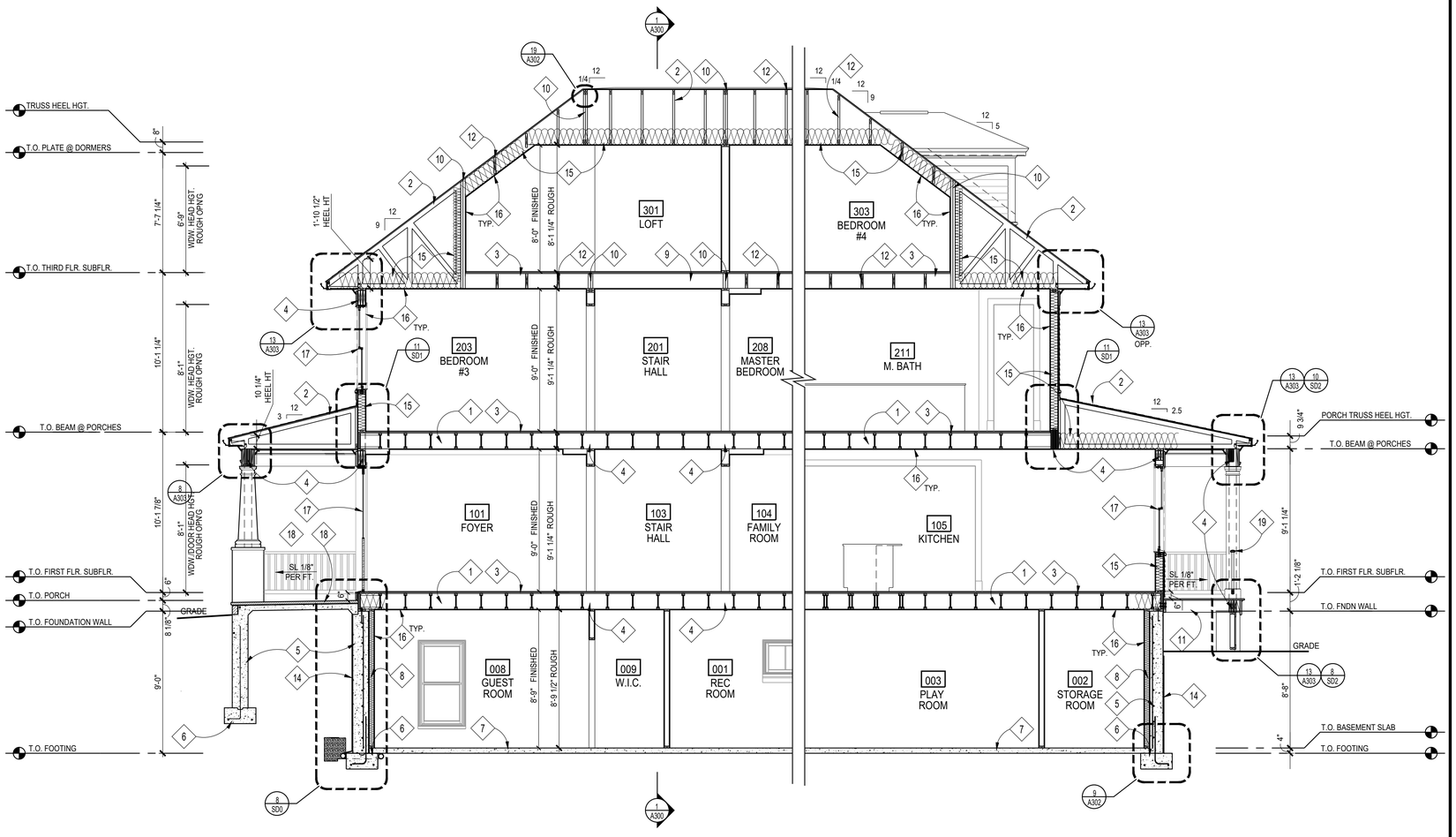

2 BUILDING SECTION @ FRONT PORCH
SCALE: 1/4"=1'=0

1 BUILDING SECTION @ REAR PORCH
SCALE: 1/4"=1'=0

CONSTRUCTION NOTES

1. FLOOR JOISTS; SEE FRAMING PLANS
2. ROOF TRUSSES BY TRUSS MANUFACTURER; SEE FRAMING PLANS
3. 3/4" T&G PLYWD. SUBFLOOR; GLUED & SCREWED
4. BEAM/ LINTEL/ HEADER; SEE FRAMING PLANS
5. CONCRETE FOUNDATION WALL; SEE FOUNDATION PLAN
6. FOOTING; SEE FOUNDATION PLAN
7. REINF. CONC. SLAB; SEE FOUNDATION PLAN
8. FUR OUT BASEMENT WALLS W/ 2x4's @ 16" O.C. & R-13 BATT INSULATION, TYP.
9. 2x INFILL FLOOR JOISTS, SEE FRAMING PLANS
10. GIRDER TRUSS BY TRUSS MANUFACTURER; SEE FRAMING PLANS
11. P.T. 2X DECK JOISTS, SEE FRAMING PLANS
12. ATTIC TRUSSES BY TRUSS MANUFACTURER; SEE FRAMING PLANS
13. GRADE BEAM SUPPORTED BY CONC. WING WALL, SEE FOUNDATION PLAN
14. WATERPROOFING AND DRAINAGE BD TO GRADE
15. INSULATION, SEE THERMAL ENVELOPE SHEET EC001
16. 1/2" GYP. BD
17. SCHEDULED WINDOW/DOOR
18. FLAGSTONE; T.B.S, ON 1" SETTING BED ON STRUCTURAL CONC. SLAB, SEE STRUCTURAL DRAWINGS.
19. PTD. WOOD HANDRAIL/GUARDRAIL PER IRC 2018

GTM ARCHITECTS

7735 OLD GEORGETOWN ROAD
SUITE 700
BETHESDA, MD 20814
(240)333-2000
(240)333-2001 FAX
WWW.GTMARCHITECTS.COM

Seal

I certify that these documents were prepared or approved by me, and that I am a duly licensed architect under the laws of the State of Maryland, license number 8385, Expiration Date: 12-06-2022.

Consultant

Project
21 HIGH STREET
LOT 3

Owner

Developer

Issue Description	Date
PERMIT SET	4-11-2022

GTM Project No.	18.0320
Checked By	GTM
Drawn By	LEO/DER
Scale	AS NOTED

Sheet Title
BUILDING SECTIONS

Sheet No.
A301

COPYRIGHT, 2022 GTM ARCHITECTS, INC.

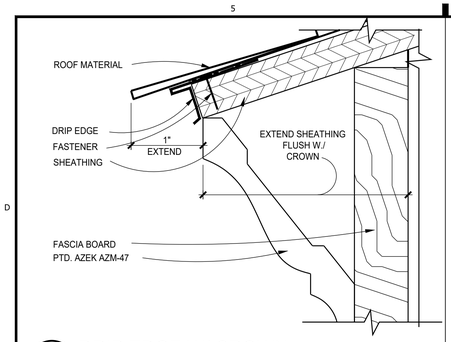

20 DRIP EDGE W/ CROWN
SCALE: 1" = 1"
(1X1)

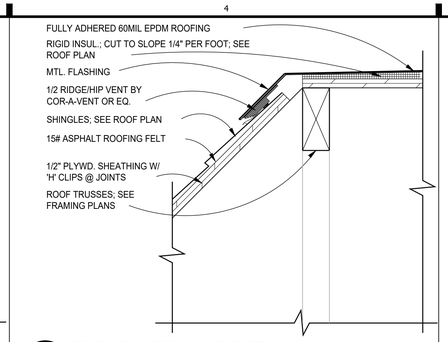

19 TYP. FLAT ROOF DETAIL
SCALE: 3'=1'-0"
(1X1)

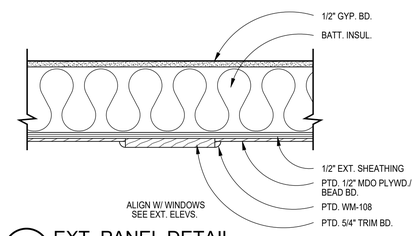

18 EXT. PANEL DETAIL
SCALE: 1"=1'-0"
(1X1)

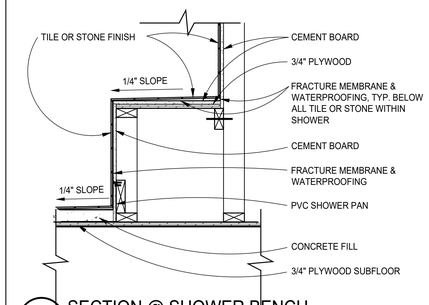

17 SECTION @ SHOWER BENCH
SCALE: 1"=1'-0"
R06-046

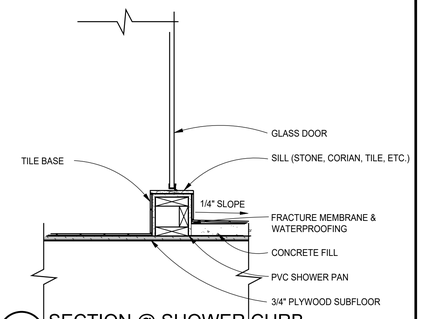

16 SECTION @ SHOWER CURB
SCALE: 1"=1'-0"
R06-047

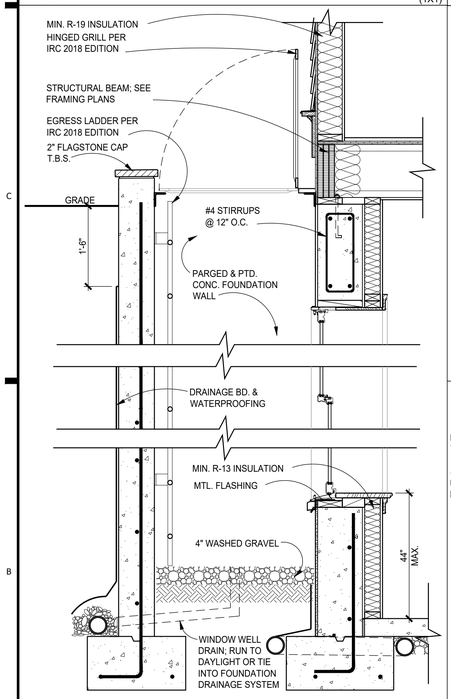

10 WINDOW WELL DETAIL, TYP.
SCALE: 3/4"=1'-0"
R03-021

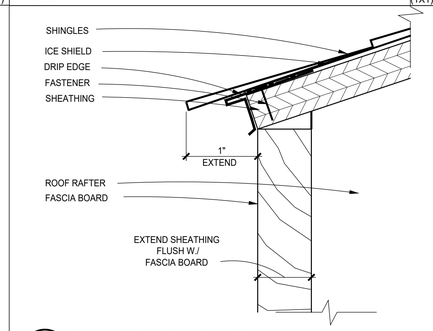

14 DRIP EDGE EAVE DETAIL
SCALE: 1"=1"
R04-051

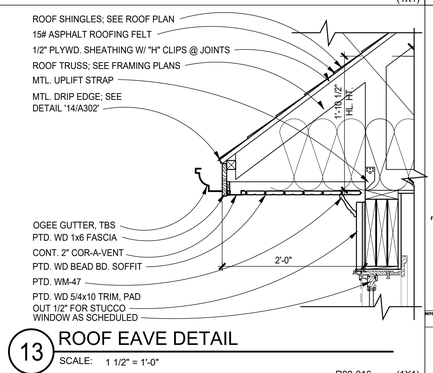

13 ROOF EAVE DETAIL
SCALE: 1 1/2" = 1'-0"
R08-016
(1X1)

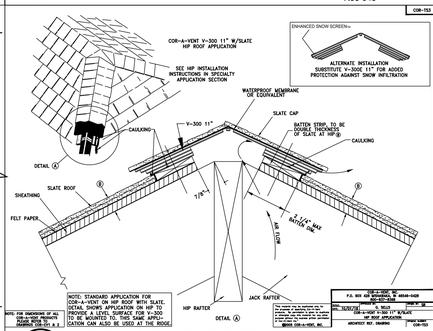

12 HIP/RIDGE VENT DETAIL
SCALE: N.T.S.
(1X1)

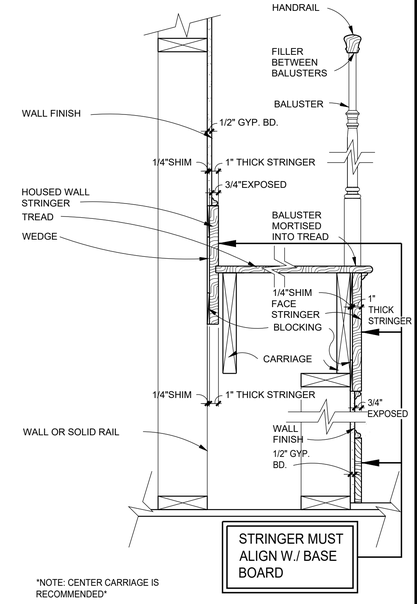

6 TYP. WOOD STAIR TRIM DETAIL
SCALE: 1 1/2"=1'-0"
R06-045

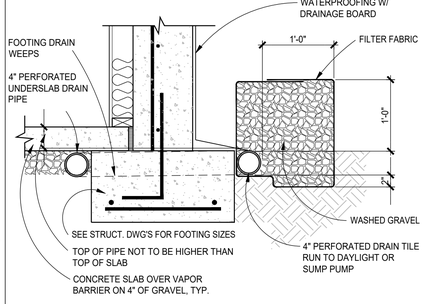

9 TYPICAL FOOTING DETAIL
SCALE: 1"=1'-0"
R01-035

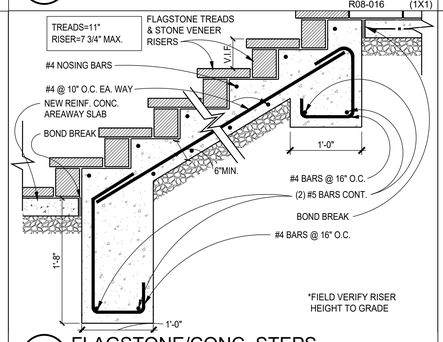

8 FLAGSTONE/CONC. STEPS
SCALE: 1"=1'-0"
R06-050
(1X1)

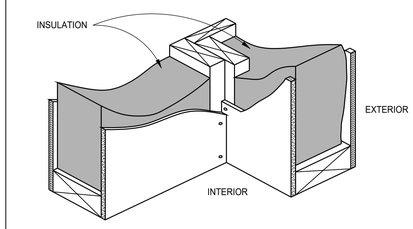

7 CORNER FRAMING DETAIL
SCALE: N.T.S.
R03-022
(1X1)

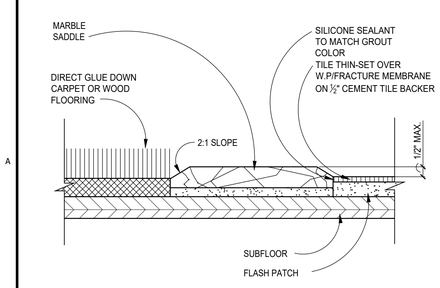

5 THRESHOLD DETAIL
SCALE: N.T.S.
S14-003 (1X1)

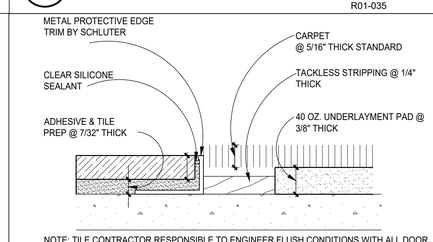

NOTE: TILE CONTRACTOR RESPONSIBLE TO ENGINEER FLUSH CONDITIONS WITH ALL DOOR OPENINGS AND CARPET INSETS, AND TO SUBMIT ANY DETAIL OR RAMPED THRESHOLDS TO GTM FOR APPROVAL. TILE CONTRACTOR RESPONSIBLE TO PREP AND INSTALL ALL TILE MATERIALS, AND TO KEEP PREMISES CLEAN DURING AND AFTER INSTALLATION. TILE CONTRACTOR RESPONSIBLE TO GROUT AND SEAL FINISHED INSTALLATION, AND SUBMIT COLORS FOR GROUTING MATERIALS TO GTM FOR APPROVAL, AND PROVIDE SPEC SHEETS ON SEALANTS, ALONG WITH MAINTENANCE SPECIFICATIONS.

4 TILE-TO-CARPET TRANSITION
SCALE: 12"=1'-0"
S14-001 (1X1)

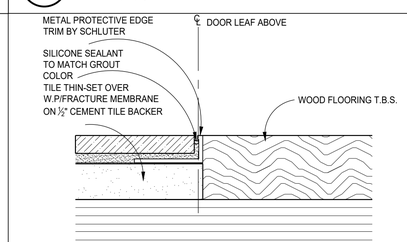

NOTE: TILE CONTRACTOR RESPONSIBLE TO ENGINEER FLUSH CONDITIONS WITH ALL DR. OPENINGS & WOOD/CARPET INSETS, & TO SUBMIT ANY DETAIL OR RAMPED THRESHOLDS TO GTM FOR APPROVAL. TILE CONTRACTOR RESPONSIBLE TO PREP & INSTALL ALL TILE MATERIALS, & TO KEEP PREMISES CLEAN DURING & AFTER INSTALLATION. TILE CONTRACTOR RESPONSIBLE TO GROUT & SEAL FINISHED INSTALLATION, & SUBMIT COLORS FOR GROUTING MATERIALS TO GTM FOR APPROVAL, & PROVIDE SPEC SHEETS ON SEALANTS, ALONG WITH MAINTENANCE SPECS. FOR FLOOR AREAS W/ RADIUS, USE EDGE TRIM W/ RADIUS PERFORATIONS, SCHLUTER "SCHIENE" OR SIM.

3 TILE-TO-WOOD TRANSITION
SCALE: 12"=1'-0"
R06-050
(1X1)

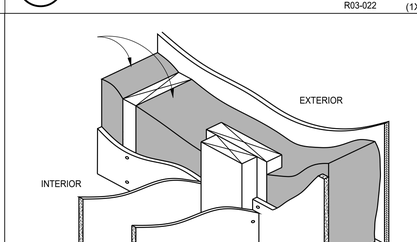

2 INTERSECTING WALL FRAMING
SCALE: N.T.S.
R03-023
(1X1)

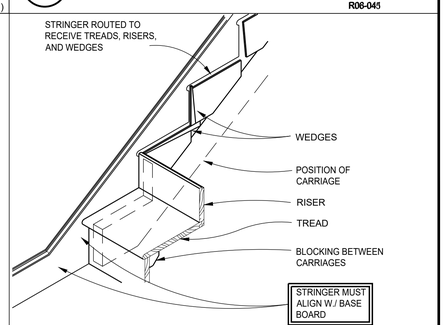

1 STAIR STRINGER
SCALE: 1"=1'-0"
R08-040

GTM ARCHITECTS

7735 OLD GEORGETOWN ROAD
SUITE 700
BETHESDA, MD 20814
(240)333-2000
(240)333-2001 FAX
WWW.GTMARCHITECTS.COM

Seal

I certify that these documents were prepared or approved by me, and that I am a duly licensed Architect under the laws of the State of Maryland, license no. 3,835, Expiration Date: 12-06-2022.

Consultant

Project

21 HIGH STREET LOT 3

Owner

Developer

PERMIT SET	4-11-2022

Issue Description	*Date*

GTM Project No.	18.0320
Checked By	GTM
Drawn By	LEO/DER
Scale	AS NOTED

Sheet Title

DETAILS

Sheet No.

A302

COPYRIGHT, 2022 GTM ARCHITECTS, INC.

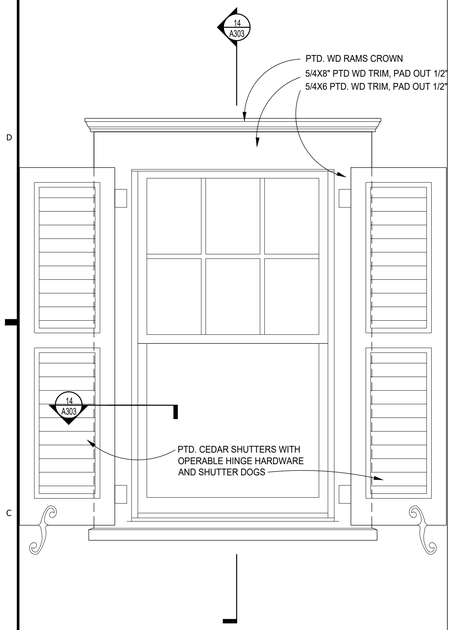

15 TYP. EXTERIOR WDW. ELEVATION

SCALE: 1"=1'-0"

(1X2)

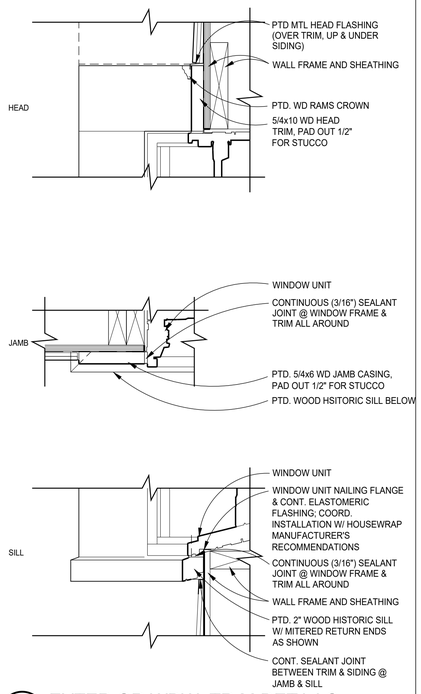

14 EXTERIOR WDW. TRIM DETAILS

SCALE: 3"=1'-0"

(1X2)

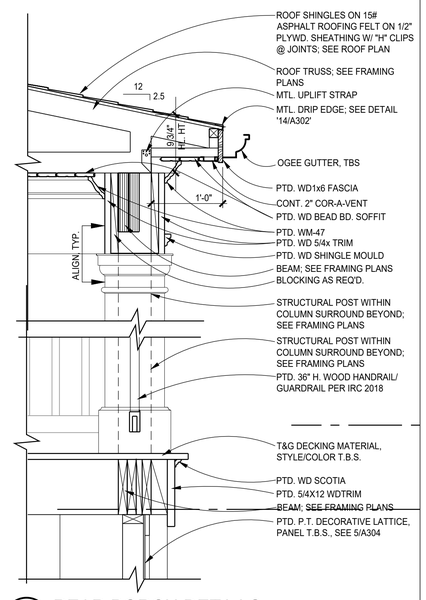

13 REAR PORCH DETAILS

SCALE: 3"=1'-0"

(1X2)

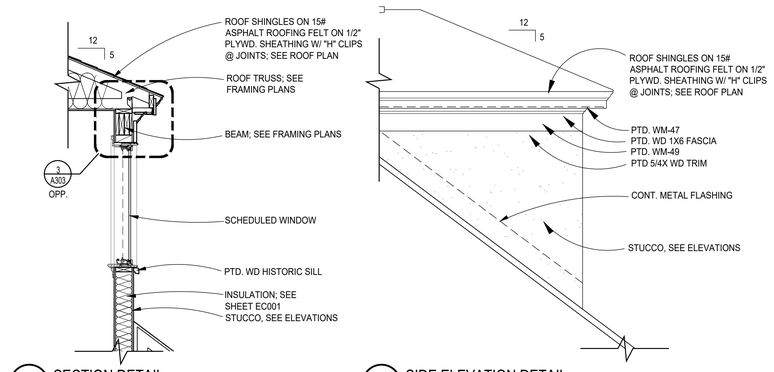

B SECTION DETAIL

SCALE: 1/2"=1'-0"

C SIDE ELEVATION DETAIL

SCALE: 1/2"=1'-0"

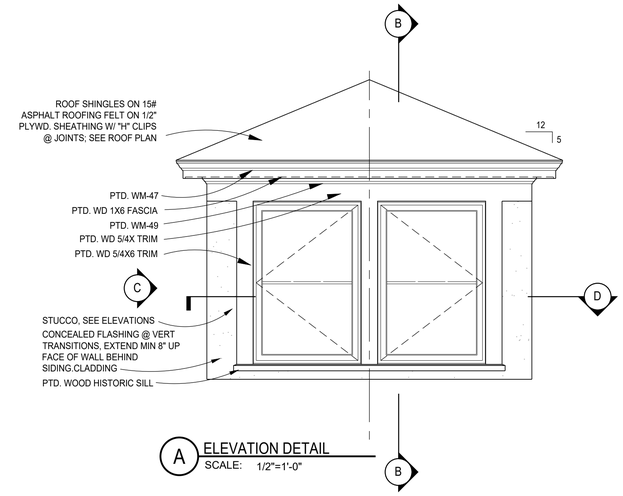

A ELEVATION DETAIL

SCALE: 1/2"=1'-0"

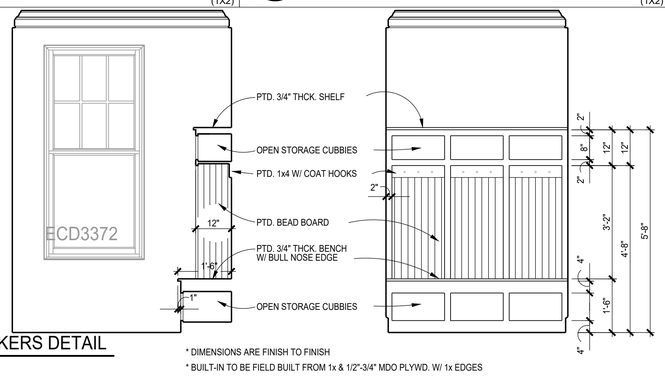

10 MUDROOM LOCKERS DETAIL

SCALE: 1/2"=1'-0"

* DIMENSIONS ARE FINISH TO FINISH
* BUILT-IN TO BE FIELD BUILT FROM 1x & 1/2"-3/4" MDO PLYWD. W/ 1x EDGES

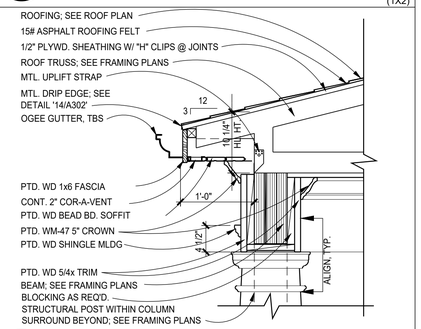

8 FRONT PORCH DETAIL

SCALE: 1"=1'-0"

(1X1)

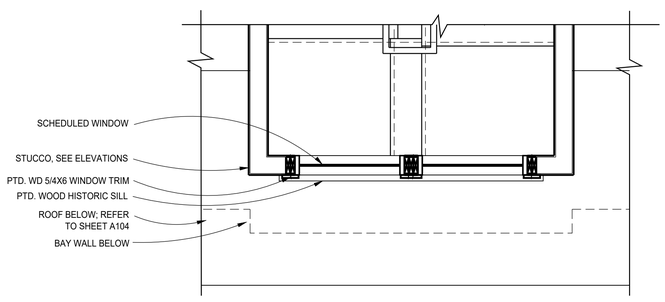

D PLAN DETAIL

SCALE: 1/2"=1'-0"

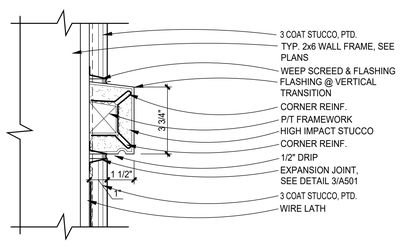

5 STUCCO BAND/SILL DETAIL

SCALE: 3"=1'-0"

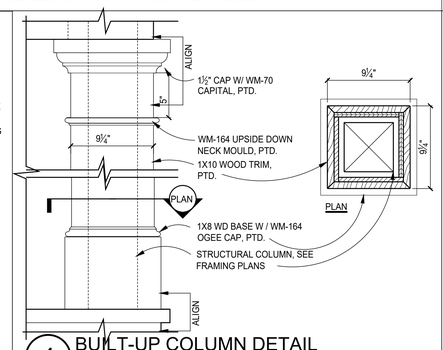

4 BUILT-UP COLUMN DETAIL

SCALE: 1 1/2" =1'-0"

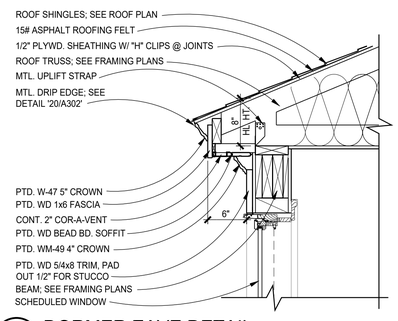

3 DORMER EAVE DETAIL

SCALE: 1 1/2" = 1'-0"

R08-016

(1X1)

2 TYP. DORMER DETAILS

SCALE: 1/2" = 1'-0"

(2X4)

FILE NAME:

GTM ARCHITECTS

7735 OLD GEORGETOWN ROAD
SUITE 700
BETHESDA, MD 20814
(240)333-2000
(240)333-2001 FAX
WWW.GTMARCHITECTS.COM

Seal

STATE OF MARYLAND — LEO E. ORDER — 2243 — ARCHITECT

I certify that these documents were prepared or approved by me, and that I am a duly licensed architect under the laws of the State of Maryland, license number 2243, Expiration Date: 12-06-2022.

Consultant

Project

21 HIGH STREET LOT 3

Owner

Developer

PERMIT SET	4-11-2022

Issue Description	Date

GTM Project No.	18.0320
Checked By	GTM
Drawn By	LEO/DER
Scale	AS NOTED

Sheet Title

DETAILS

Sheet No.

A303

COPYRIGHT, 2022 GTM ARCHITECTS, INC.

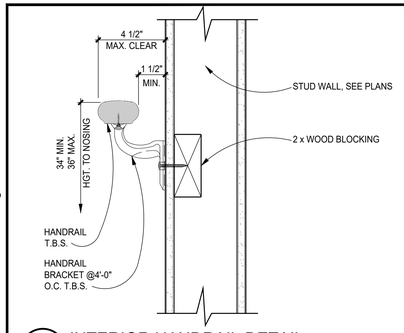

20 INTERIOR HANDRAIL DETAIL

SCALE: 3"=1'-0"

R08-044

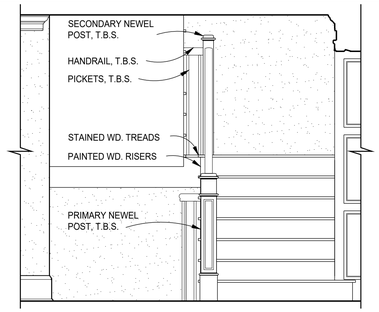

19 STAIR DETAIL

SCALE: 1/2"=1'-0"

(1X1)

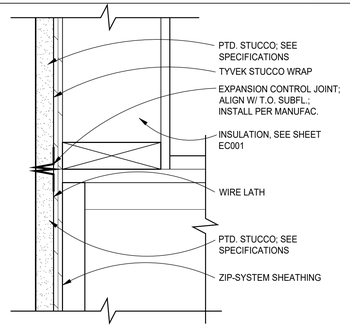

15 EXPANSION CONTROL JOINT DET.

SCALE: 3"=1'-0"

R03-025 (1X1)

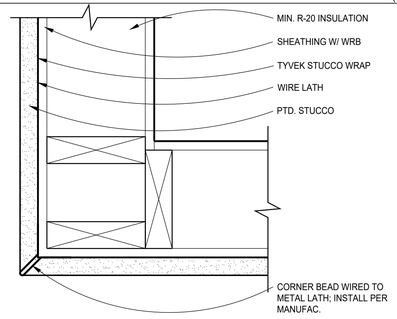

14 EXPANSION CONTROL JOINT DET.

SCALE: 3"=1'-0"

(1X1)

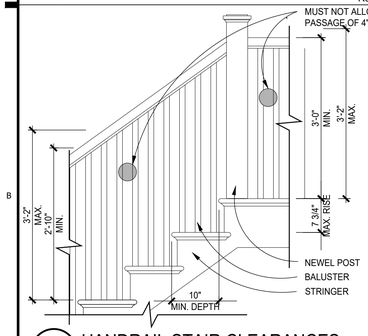

10 HANDRAIL STAIR CLEARANCES

SCALE: 3/4"=1'-0"

R08-045

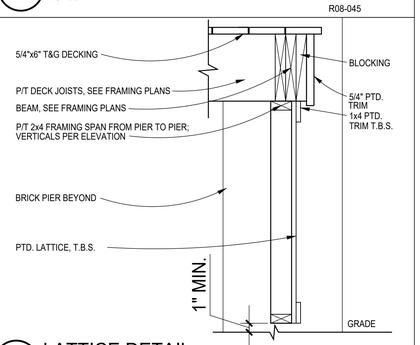

5 LATTICE DETAIL

SCALE: 1"=1'-0"

R08-038 (1X1)

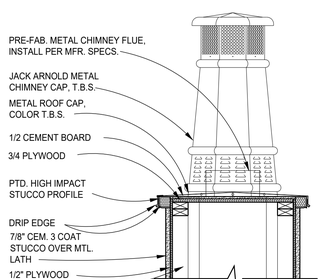

B SECTION

SCALE: AS NOTED

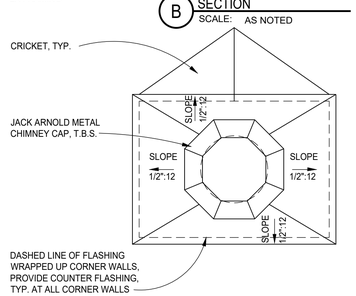

A PLAN

SCALE: AS NOTED

4 CHIMNEY CAP DETAILS

SCALE: 3/4" = 1'-0"

??? (1X2)

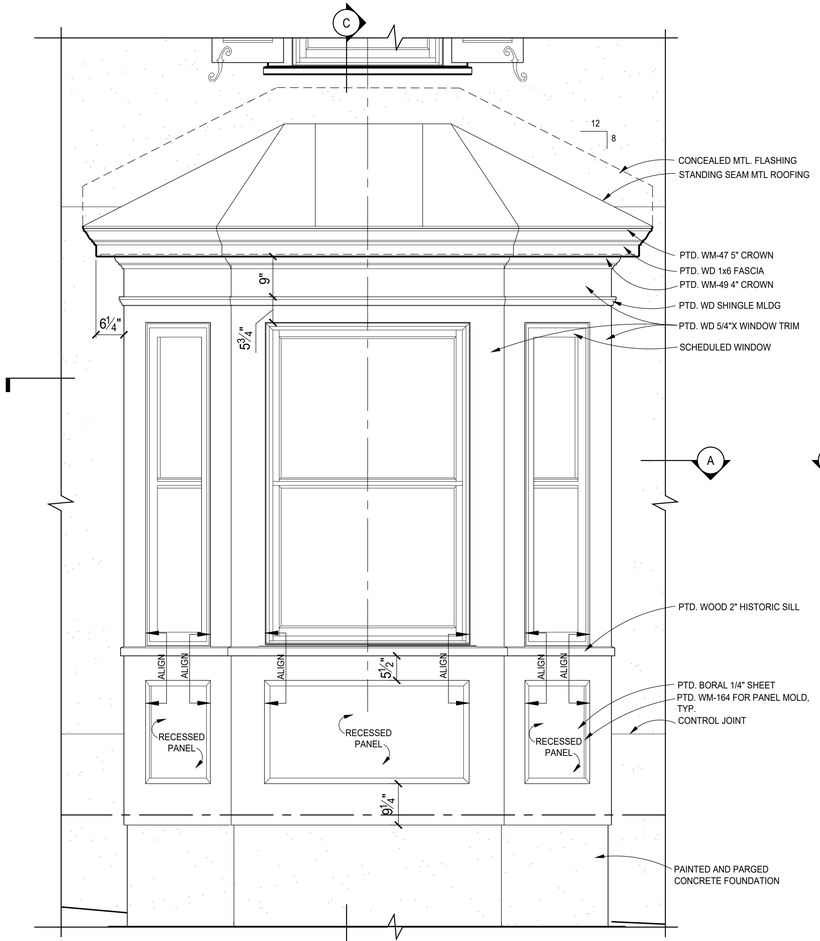

B FRONT ELEVATION

SCALE: 3/4"=1'-0"

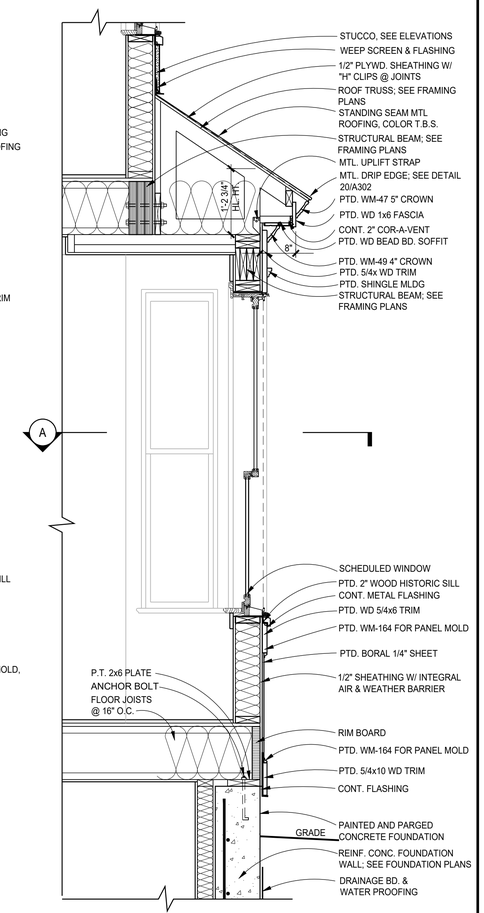

C BAY WINDOW SECTION

SCALE: 3/4"=1'-0"

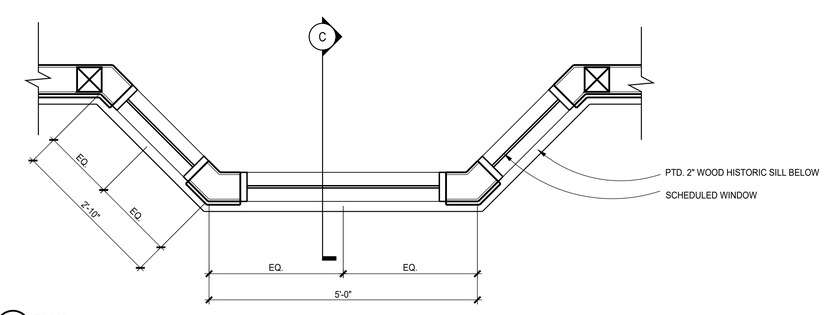

A PLAN

SCALE: 3/4"=1'-0"

3 BAY DETAILS

SCALE: AS NOTED

(3X4)

GTM ARCHITECTS

7735 OLD GEORGETOWN ROAD
SUITE 700
BETHESDA, MD 20814
(240)333-2000
(240)333-2001 FAX
WWW.GTMARCHITECTS.COM

Seal

I certify that these documents were prepared or approved by me, and that I am a duly licensed Architect under the laws of the State of Maryland, License No. 6305, Expiration Date: 12-06-2022.

Consultant

Project

21 HIGH STREET LOT 3

Owner

Developer

PERMIT SET	4-11-2022

Issue Description	*Date*

GTM Project No.	18.0320
Checked By	GTM
Drawn By	LEO/DER
Scale	AS NOTED

Sheet Title

DETAILS

Sheet No.

A304

COPYRIGHT, 2022 GTM ARCHITECTS, INC.

FILE NAME:

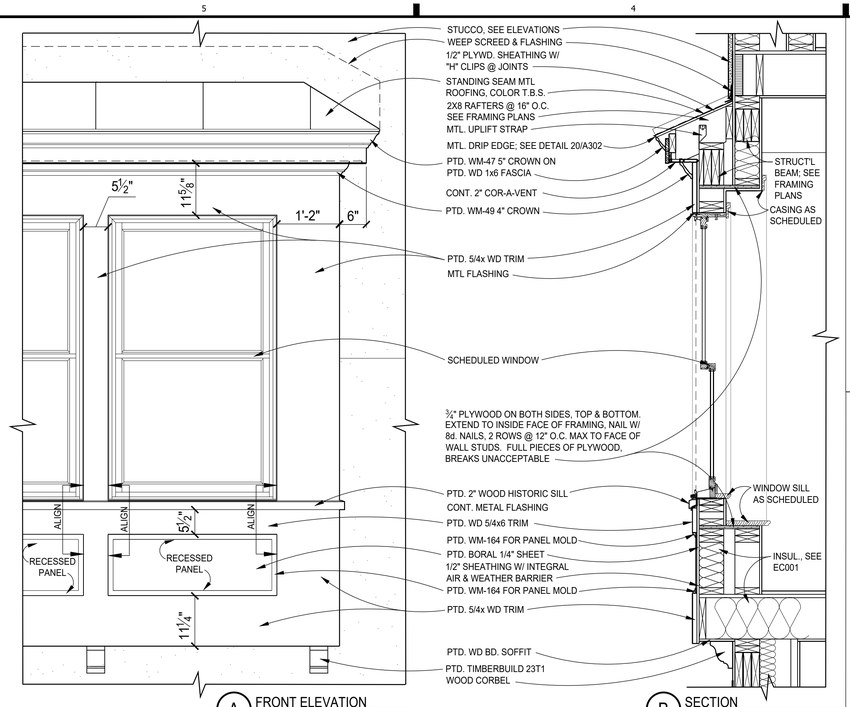

15 BAY DETAILS
SCALE: AS NOTED

18 NOT USED
SCALE:

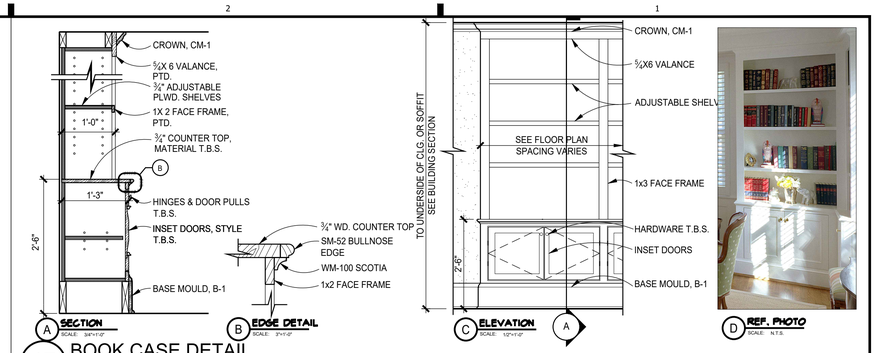

17 BOOK CASE DETAIL
SCALE: AS NOTED

(1X1)

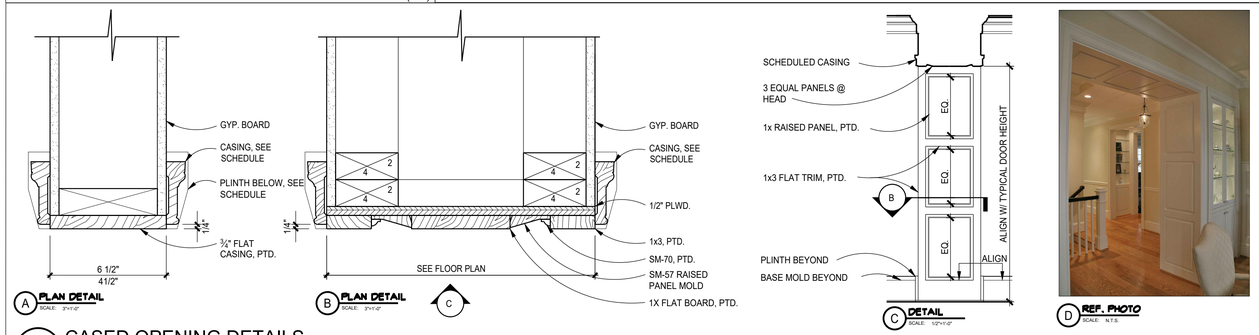

13 CASED OPENING DETAILS
SCALE: AS NOTED

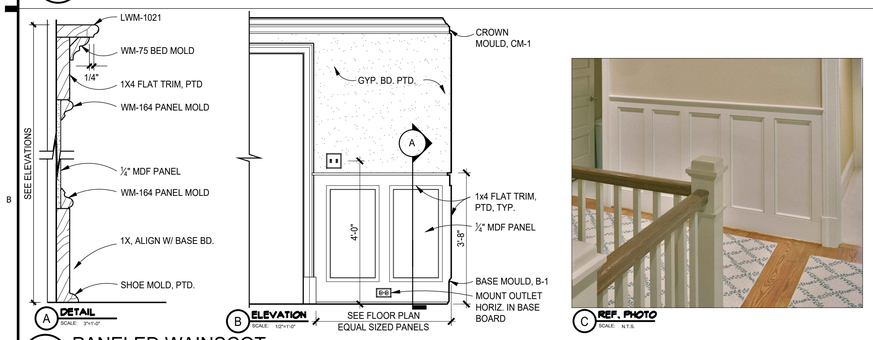

10 PANELED WAINSCOT
SCALE: AS NOTED

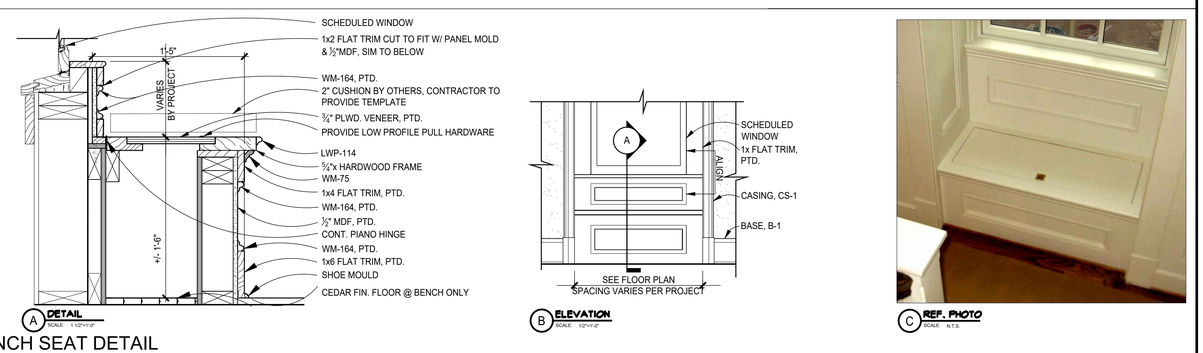

8 BENCH SEAT DETAIL
SCALE: AS NOTED

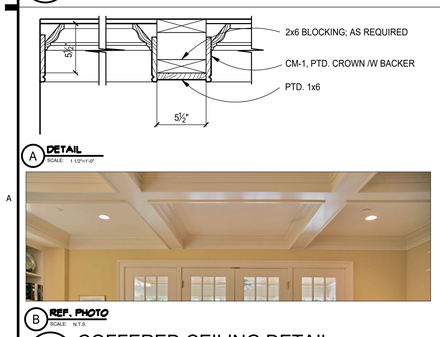

5 COFFERED CEILING DETAIL
SCALE: 1 1/2"=1'-0"

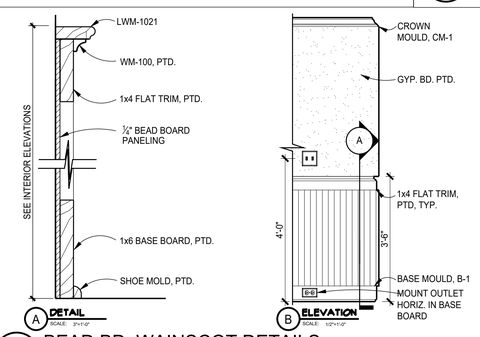

4 BEAD BD. WAINSCOT DETAILS
SCALE: AS NOTED

C REF. PHOTO SCALE: N.T.S.

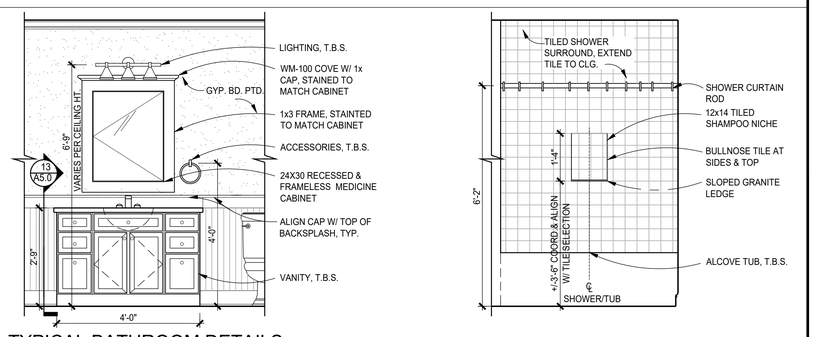

2 TYPICAL BATHROOM DETAILS
SCALE: 1/2"=1'-0"

FILE NAME:

GTM ARCHITECTS

7735 OLD GEORGETOWN ROAD
SUITE 700
BETHESDA, MD 20814
(240)333-2000
(240)333-2001 FAX
WWW.GTMARCHITECTS.COM

Seal

I certify that these documents were prepared or approved by me, and that I am a duly licensed Architect under the laws of the State of Maryland, License No. 6305, Expiration Date: 12-06-2022.

Consultant

Project

21 HIGH STREET LOT 3

Owner

Developer

PERMIT SET	4-11-2022

Issue Description	Date

GTM Project No.	18.0320
Checked By	GTM
Drawn By	LEO/DER
Scale	AS NOTED

Sheet Title

DETAILS

Sheet No.

A305

COPYRIGHT, 2022 GTM ARCHITECTS, INC.

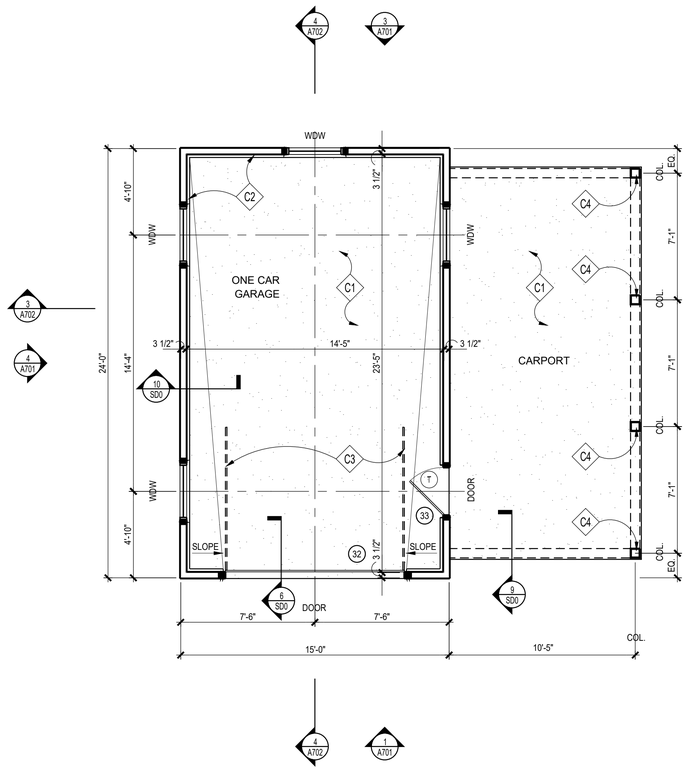

1 GARAGE PLAN
SCALE: 1/4"=1'-0"

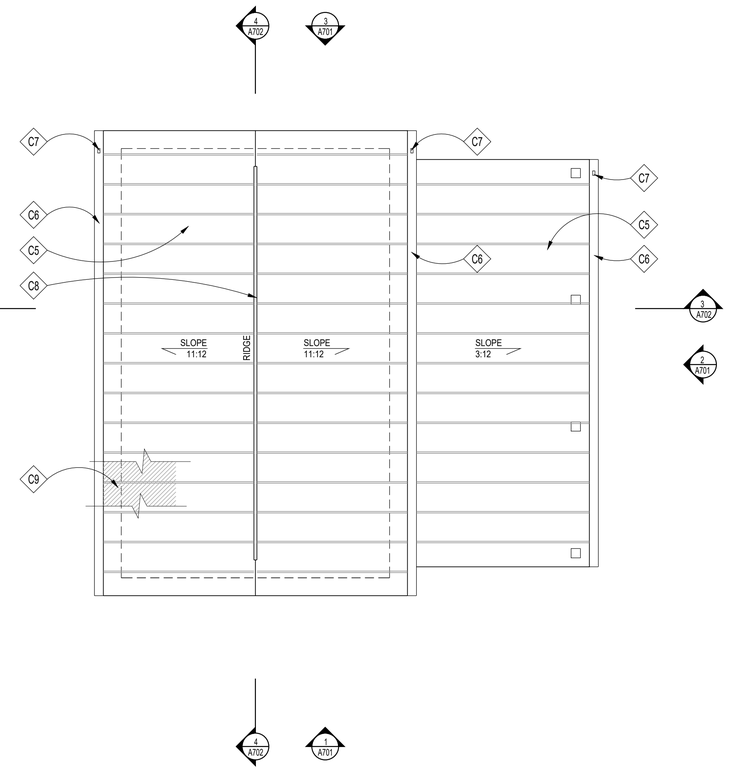

2 ROOF PLAN
SCALE: 1/4"=1'-0"

CONSTRUCTION NOTES

- C1 REINF. CONC. SLAB; SEE FOUNDATION PLAN
- C2 CONC. CURB BELOW
- C3 GARAGE DOOR TRACKS ABOVE
- C4 6x6 P.T. POST, PTD.
- C5 STANDING SEAM METAL ROOF, T.B.S.
- C6 GUTTER TO MATCH MAIN HOUSE
- C7 DOWNSPOUT TO MATCH MAIN HOUSE; SEE CIVIL DRAINAGE PLAN FOR ADDITIONAL INFO
- C8 RIDGE/HIP VENTS BY COR-A-VENT OR APPROVED EQUAL
- C9 SEE NOTE #1 UNDER GENERAL ROOFING NOTES, TYP.

ROOFING NOTES

1. PROVIDE SELF-ADHERING, 40 MIL ICE AND WATER GUARD UNDERLAYMENT UNDER SHINGLES AT ALL VALLEYS AND FROM LOWEST EDGE OF ROOF SURFACES TO A POINT AT LEAST 24" INSIDE THE EXTERIOR WALL LINE, AND ON ALL AREAS WITH A SLOPE LESS THAN 4:12.
2. SEE FRAMING PLAN FOR OVERBUILD AREAS
3. DOTTED LINE INDICATES LINE OF BUILDING BELOW

WALL TYPES

TYPICAL EXTERIOR WALL: 2x4 WOOD STUDS 16" O.C. W/ VAPOR BARRIER, 1/2" OSB SHEATHING, TYVEK STUCCO WRAP, & PTD. LAP SIDING TO MATCH MAIN HOUSE; SEE ELEVATIONS.

GTM ARCHITECTS

7735 OLD GEORGETOWN ROAD
SUITE 700
BETHESDA, MD 20814
(240)333-2000
(240)333-2001 FAX
WWW.GTMARCHITECTS.COM

Seal

I certify that these documents were prepared or approved by me, and that I am a duly licensed architect under the laws of the State of Maryland, license number 8385, Expiration Date: 12-06-2022.

Consultant

Project
21 HIGH STREET
LOT 3

Owner

Developer

PERMIT SET	4-11-2022
Issue Description	Date

GTM Project No.	18.0320
Checked By	GTM
Drawn By	LEO/DER
Scale	AS NOTED

Sheet Title
GARAGE PLANS

Sheet No.
A700

COPYRIGHT, 2022 GTM ARCHITECTS, INC.

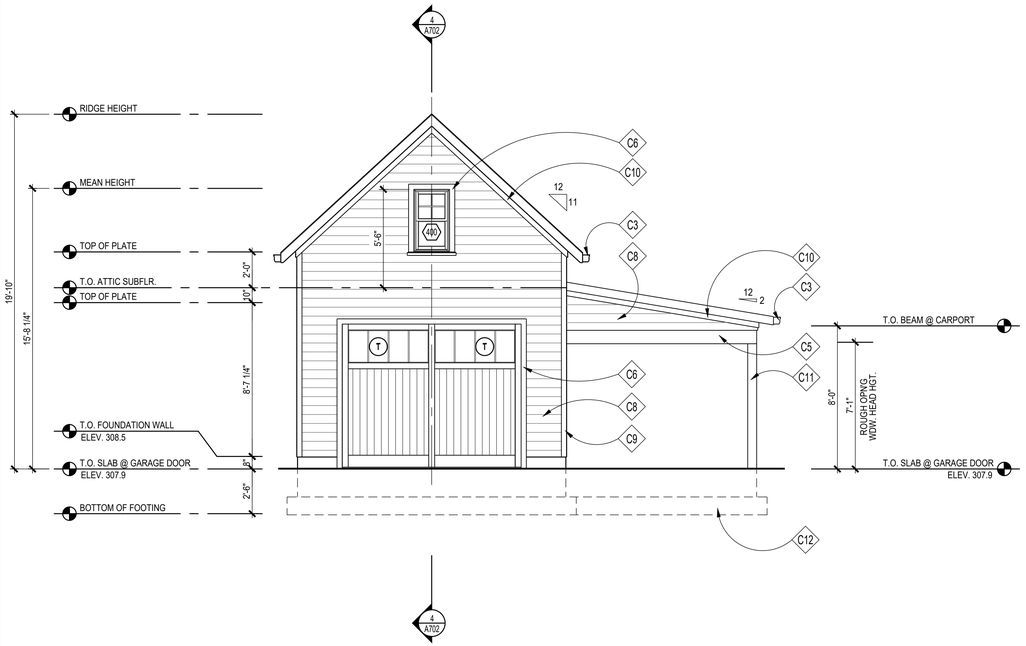

1 FRONT ELEVATION
SCALE: 1/4"=1'-0"

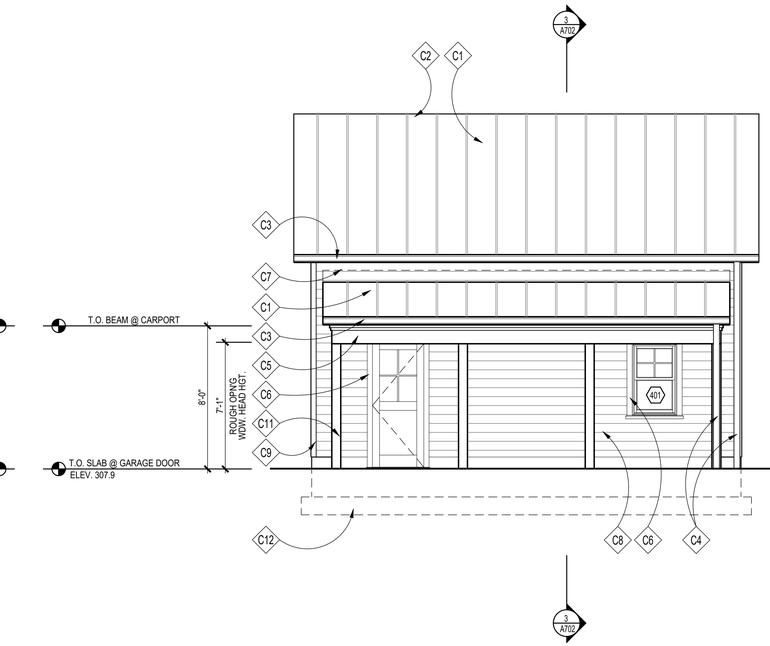

2 RIGHT SIDE ELEVATION
SCALE: 1/4"=1'-0"

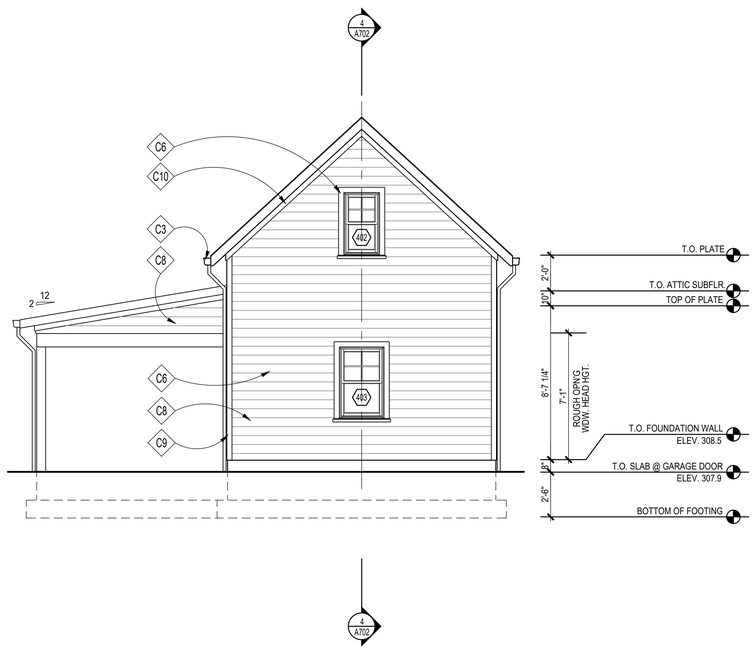

3 REAR ELEVATION
SCALE: 1/4"=1'-0"

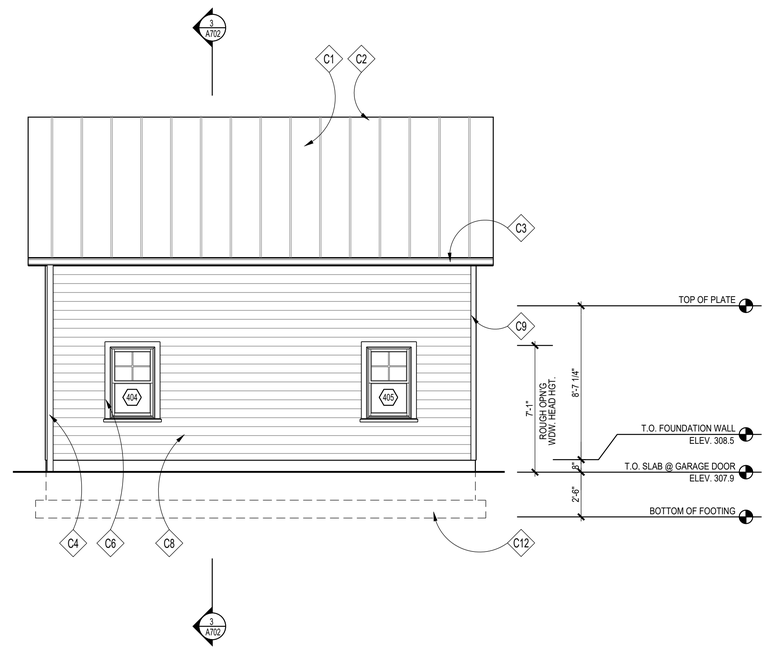

4 LEFT SIDE ELEVATION
SCALE: 1/4"=1'-0"

CONSTRUCTION NOTES

- C1 STANDING SEAM METAL ROOF, T.B.S.
- C2 RIDGE/HIP VENTS BY COR-A-VENT OR APPROVED EQUAL
- C3 OGEE GUTTER (ON 1x6 PTD. FASCIA BD.)
- C4 DOWNSPOUT TO MATCH MAIN HOUSE; SEE CIVIL DRAINAGE PLAN FOR ADDITIONAL INFO
- C5 PTD. AZEK 5/4x12 TRIM BAND, ALIGN W/ TOP OF WINDOWS
- C6 PTD. WOOD 5/4x4 WINDOW/DOOR TRIM W/ PTD. WOOD HISTORIC SILL, TYP.
- C7 CONCEALED FLASHING, TYP.
- C8 PTD. HARDIE SIDING, 6" EXPOSURE
- C9 PTD. WOOD 5/4x4 CORNER TRIM BOARDS, TYP.
- C10 PTD. WOOD 5/4x4 RAKE, TYP.
- C11 P.T. 6x6 POST, PTD.
- C12 LINE OF FOOTING BELOW

ROOFING NOTES

1. MEMBRANE ROOF SHALL BE 60 MIL, WHITE PVC, ASTM D 4434, TYPE III, FABRIC REINFORCED. THE MEMBRANE SHALL BE ADHERED TO MECHANICALLY FASTENED, POLYISOCYANURATE BOARD INSULATION ASTM C 1289, FELT OR GLASS-FIBER MAT FACER ON BOTH MAJOR SURFACES. TAPERED INSULATION SHALL BE FACTORY-MADE TO A MINIMUM SLOPE OF 1/4" PER FOOT. INSULATION SHALL BE INSTALLED IN TWO LAYERS WITH JOINTS STAGGERED.
2. PROVIDE FLASHING FOR MIN. 8" EACH SIDE OF ALL VALLEYS & PITCH CHANGES

WALL TYPES

TYPICAL EXTERIOR WALL: 2x4 WOOD STUDS 16" O.C. W/ VAPOR BARRIER, 1/2" OSB SHEATHING, TYVEK STUCCO WRAP, & PTD. STUCCO TO MATCH MAIN HOUSE; SEE ELEVATIONS.

GENERAL NOTES

1. REFER TO THE ARCH DWGS FOR DIMENSIONS, ELEVATIONS, AND BALANCE OF INFORMATION. REFER TO MEP DWGS FOR ADD'L INFO ON DRAINGS, UTILITY LINES, SLEEVES & OPENING REQ'S.
2. REFER TO SN.1 FOR STRUCTURAL NOTES. REFER TO SD.1, SD.2, SD.3, SD.4 & WB.1 FOR APPLICABLE DETAILS NOT REFERENCED ON PLANS.
3. PROVIDE SOLID BLOCKING BETWEEN FLOORS UNDER ALL WOOD POSTS ALL THE WAY DOWN TO TOP OF BEAMS & CONC WALLS. PROVIDE 2x6 SQUASH BLOCKING EA. SIDE OF TJI JOISTS AT STACKED LOAD BEARING WALLS, INSTALL PER TJI. MANUF. PROVIDE INTERMEDIATE HORIZONTAL BLKG. STUDS AT 4'-0" VERTICAL SPACING AT ALL LOAD BEARING WALLS.
4. IN ADDITION TO POSTS SHOWN ON PLAN PROVIDE THE FOLLOWING:
   ADD'L (1) KING STUD EACH SIDE OF OPNGS UP TO 4'-0" WIDE.
   ADD'L (2) KING STUD EACH SIDE OF OPNGS UP TO 8'-0" WIDE.
5. PROVIDE FRAMING CONNECTORS FOR JOISTS, BEAMS & POSTS. CONNECTORS SHALL BE BY SIMPSON STRONG-TIE OR EQ. AND SHALL BE PROPERLY SIZED ACCORDING TO MEMBER SIZES, AND INSTALLED ACCORDING TO MANUFACTURER. PROVIDE SIMPSON H2.5A UPLIFT CONNECTORS AT ALL RAFTERS. PROVIDE ST215 STRAPS CONNECTING TOP OF SHEARWALLS TO HEADERS.
6. INSTALL CHIMNEY ANCHORAGE STRAPS PER IRC 2012 EDITION.
7. REFER TO WB.1 FOR WALL BRACING PANEL CONSTRUCTION INFORMATION & TYP. DETAILS

GTM ARCHITECTS

7735 OLD GEORGETOWN ROAD
SUITE 700
BETHESDA, MD 20814
(240)333-2000
(240)333-2001 FAX
WWW.GTMARCHITECTS.COM

Seal

I certify that these documents were prepared or approved by me, and that I am a duly Licensed architect under the laws of the State of Maryland. License number 8088, Expiration Date: 10.06.2022.

Consultant

Project

21 HIGH STREET
LOT 3

Owner

Developer

PERMIT SET	4-11-2022
Issue Description	*Date*

GTM Project No.	18.0320
Checked By	GTM
Drawn By	LEO/DER
Scale	AS NOTED

Sheet Title

GARAGE ELEVATIONS

Sheet No.

A701

COPYRIGHT, 2022 GTM ARCHITECTS, INC.

FILE NAME:

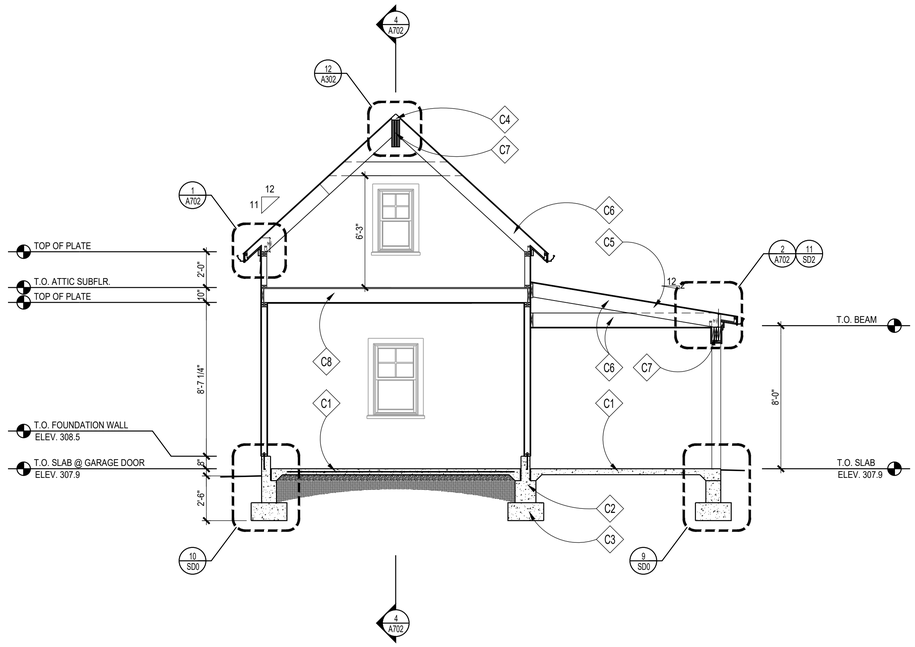

3 BUILDING SECTION
SCALE: 1/4"=1'-0"

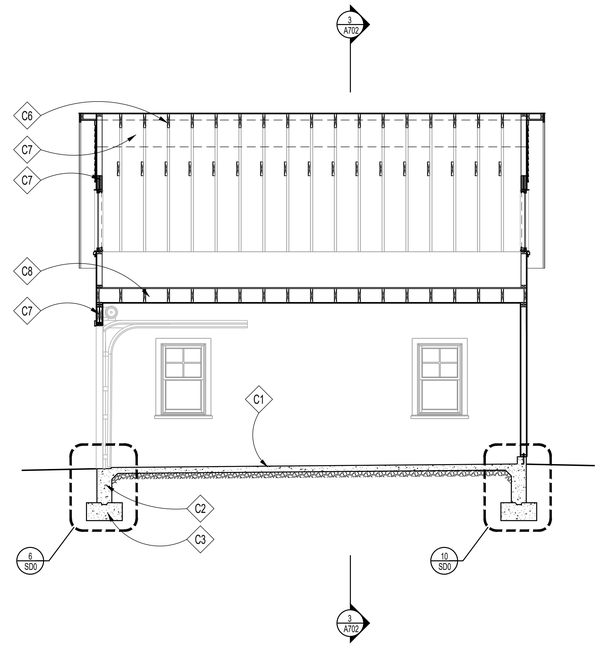

4 BUILDING SECTION
SCALE: 1/4"=1'-0"

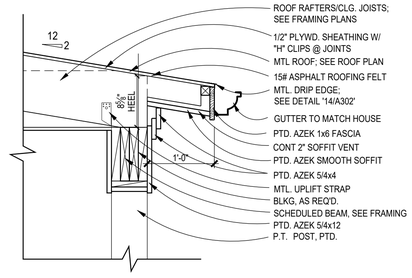

2 CARPORT SOFFIT DETAIL
SCALE: 1" = 1'-0"
(1X1)

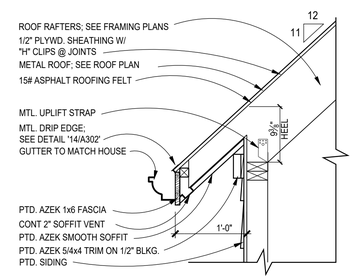

1 GARAGE SOFFIT DETAIL
SCALE: 1" = 1'-0"
(1X1)

CONSTRUCTION NOTES

- C1 REINF. CONC. SLAB; SEE FOUNDATION PLAN
- C2 CONCRETE FOUNDATION WALL; SEE FOUNDATION PLAN
- C3 FOOTING; SEE FOUNDATION PLAN
- C4 NOT USED
- C5 NOT USED
- C6 2x RAFTERS/CEILING JOISTS, SEE FRAMING PLAN
- C7 BEAM, SEE FRAMING PLAN
- C8 2x10 JOISTS, SEE FRAMING PLAN

GTM ARCHITECTS

7735 OLD GEORGETOWN ROAD
SUITE 700
BETHESDA, MD 20814
(240)333-2000
(240)333-2001 FAX
WWW.GTMARCHITECTS.COM

Seal

I certify that these documents were prepared or approved by me, and that I am a duly licensed architect under the laws of the State of Maryland, license number 8385, Expiration Date: 12-06-2022.

Consultant

Project
21 HIGH STREET
LOT 3

Owner

Developer

PERMIT SET	4-11-2022
Issue Description	Date

GTM Project No.	18.0320
Checked By	GTM
Drawn By	LEO/DER
Scale	AS NOTED

Sheet Title
GARAGE SECTIONS/ DETAILS

Sheet No.
A702

COPYRIGHT, 2022 GTM ARCHITECTS, INC.

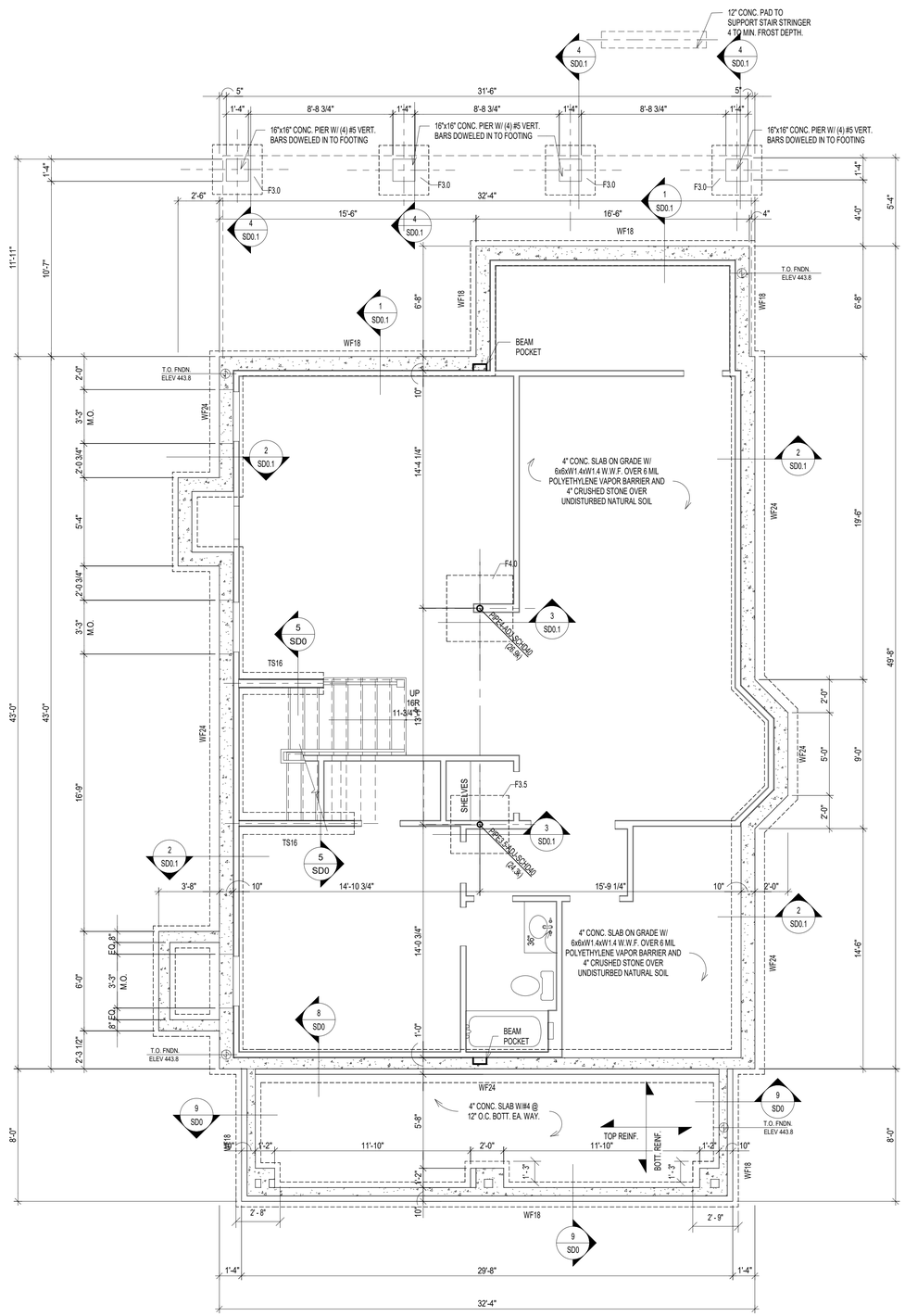

1 / S0 FOUNDATION PLAN
SCALE: 1/4" = 1'-0"

BASEMENT FOUNDATION WALL SCHEDULE (MAX. UNSPPORTED HEIGHT = 9'-0")					
THICKNESS	UNBALANCED BACK FILL HEIGHT	VERTICAL REBARS (E.F.P. = 30 PSF/FT)	VERTICAL REBARS (E.F.P. = 45 PSF/FT)	VERTICAL REBARS (E.F.P. = 60 PSF/FT)	HORIZONTAL REBARS
8"	UP TO 5'-0"	NOT REQD.	NOT REQD.	NOT REQUIRED	#4 @ 24" O.C.
	5'-0" < HT < 6'-0"	NOT REQD.	NOT REQD.	#5 @ 36" O.C.	
	6'-0" < HT < 7'-0"	NOT REQD.	#5 @ 36" O.C.	#5 @ 24" O.C.	
	7'-0" < HT < 8'-0"	#4 @ 24" O.C.	#5 @ 24" O.C.	#5 @ 20" O.C.	
	8'-0" < HT < 9'-0"	#4 @ 18" O.C.	#5 @ 20" O.C.	#5 @ 16" O.C.	

NOTE:
1. BASED ON TABLE 3.12 OF PCA-100 "PRESCRIPTIVE DESIGN OF EXTERIOR CONCRETE WALLS" WITH FOLLOWING CRITERIA
2. f'C' = 3000 psi & Fy = 60000 ksi
3. E.F.P. = EQUIVALENT EARTH PRESSURE
4. MAXIMUM WALL HEIGHT = 9'-0"
5. MIN. COVER TO REINFORCEMENT AT INSIDE FACE = 3/4" & MIN. COVER TO REINFORCEMENT AT OUTSIDE FACE = 1 1/2"
6. PROVIDE MINIMUM ONE #4 REBAR 12" FROM TOP & BOTTOM.
7. PROVIDE PROPER DRAINAGE TO THE BACKFILL REFER TO ARCHITECTURAL DRAWINGS FOR DRAINAGE AND WATEPROOFING
8. REFER TO GEOTECHNICAL REPORT FOR ALL FURTHER RECOMMENDATIONS. GEOTECHNICAL ENGINEER TO VERIFY FOUNDATION DESIGN CRITERIA FOR SOIL BEARING CAPAICTY AND EARTH PRESSURE.
9. REBARS CAN BE SUBSTITUTED WITH #4 REBARS TO MATCH SPECIFIED AREA OF REINFORCEMENT IN ABOVE TABLE

BASEMENT FOUNDATION WALL SCHEDULE (MAX. UNSPPORTED HEIGHT = 9'-0")					
THICKNESS	UNBALANCED BACK FILL HEIGHT	VERTICAL REBARS (E.F.P. = 30 PSF/FT)	VERTICAL REBARS (E.F.P. = 45 PSF/FT)	VERTICAL REBARS (E.F.P. = 60 PSF/FT)	HORIZONTAL REBARS
10"	UP TO 6'-0"	NOT REQD.	NOT REQD.	NOT REQD.	#4 @ 24" O.C.
	6'-0" < HT < 7'-0"	NOT REQD.	NOT REQD.	#4 @ 24" O.C.	
	7'-0" < HT < 8'-0"	NOT REQD.	#4 @ 18" O.C.	#4 @ 18" O.C.	
	8'-0" < HT < 9'-0"	NOT REQD.	#4 @ 16" O.C.	#4 @ 12" O.C.	

NOTE:
1. BASED ON TABLE A.4 OF ACI 332-10 WITH FOLLOWING CRITERIA
2. f'C' = 3000 psi & Fy = 60000 ksi
3. E.F.P. = EQUIVALENT EARTH PRESSURE
4. MAXIMUM WALL HEIGHT = 9'-0"
5. MIN. COVER TO REINFORCEMENT AT INSIDE FACE = 3/4" & MIN. COVER TO REINFORCEMENT AT OUTSIDE FACE = 1 1/2"
6. PROVIDE MINIMUM ONE #4 REBAR 12" FROM TOP & BOTTOM.
7. PROVIDE PROPER DRAINAGE TO THE BACKFILL REFER TO ARCHITECTURAL DRAWINGS FOR DRAINAGE AND WATEPROOFING
8. REFER TO GEOTECHNICAL REPORT FOR ALL FURTHER RECOMMENDATIONS. GEOTECHNICAL ENGINEER TO VERIFY FOUNDATION DESIGN CRITERIA FOR SOIL BEARING CAPAICTY AND EARTH PRESSURE.

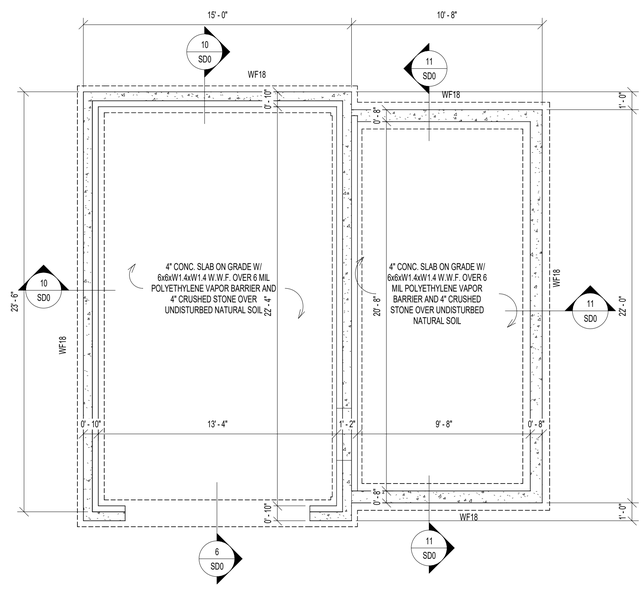

2 / S0 FOUNDATION PLAN @ GARAGE
SCALE: 1/4" = 1'-0"

LEGENDS:

TS = THICKENED SLAB
WF = WALL FOOTING
F = FOOTING

FOUNDATION NOTES:

1. FOUNDATION DESIGN IS BASED ON ASSUMED DESIGN CRITERIA AS SPECIFIED ON GENERAL NOTES SHEET. AND SHALL BE FIELD VERIFIED BY GEOTECHNICAL ENGINEER. NOTIFY ENGINEER IF ANY DESCRIPANCIES ARE FOUND OR CRITERIA DIFFERS FROM ASSUMED CRITERIA.
2. VERIFY AND COORDINATE ALL DIMENSIONS WITH ARCHITECTURAL AND CIVIL DRAWINGS. NOTIFY ENGINEER IF ANY COORINDATION IS REQUIRED.
3. BASEMENT SLAB SHALL BE 4" CONC. SLAB ON GRADE WITH 6x6xW1.4xW1.4 W.W.F U.N.O.
4. ALL EXTERIOR FOOTINGS SHALL BE LOWERED TO MINMUM FROST DEPTH AS REQUIRED BY LOCAL JURISDICTIONS.
5. PROVIDE MIN. 3'-0"x3'-0"x12" CONC. FOOTING W/ #5 @ 12" O.C. BOTT. EA. WAY. UNDER EACH POST UNLESS NOTED OTHERWISE ON FOUDATION PLAN.
6. PROVIDE MIN. 16"x12" CONC. THICKENED SLAB UNDER BEARING WALLS UNLESS NOTED OTHERWISE.
7. PROVIDE MIN. 24"x8" CONC. WALL FOOTING W/ MIN. (2) #4 CONT. AT BOTT. UNDER ALL FOUNDATION WALLS UNLESS NOTED OTHERWISE.
8. PROVIDE WATERPROOFING, DAMP PROOFING PER APPLICABLE CODES AT FOUNDATION WALL, FOOTINGS AND SLABS.
9. INSTALL CONTINUOUS 4"Ø PERFORATED DRAIN PIPES ON EACH SIDE OF FOOTING. CONNECTED WITH 1 1/2"Ø WEEP HOLES @ 8'-0" O.C. AND DRAIN TO SUMP PUMP OR DAY LIGHT.

PLAN LEGENDS & SYMBOLS:

- INDICATES BEARING WALL
- INDICATES DRAIN HOLE FROM ABOVE
- INDICATES JOIST/TRUSS HANEGR (REFER TO SHOP DWGS)
- INDICATES FRAMING DIRECTION
- INDICATES REBAR DIRECTION
- (_J+_S) — INDICATES NO. OF KING STUDS AT EACH END; INDICATES NO. OF JACK STUDS AT EACH END
- WF?? — INDICATES WALL FOOTING; WIDTH OF WALL FOOTING IN INCHES
- TS?? — INDICATES THICKENED SLAB; WIDTH OF THICKENED SLAB IN INCHES
- Fx.x — INDICATES ISOLATED COLUMN FOOTING; INDICATES SIZE OF FOOTING IN DECIMAL FEET
- ML?? — MICROLAM LVL 2.0E; DEPTH OF MICROLAM LVL IN INCHES
- LSL?? — LAMINATED STRAND LUMBER 1.7E; DEPTH OF TIMBERSTAND LSL BEAM IN INCHES
- PSL?? — PARALLAM STRAND LUMBER 2.0E; WIDTHxDEPTH OF MEMBER
- CC — COLUMN CAP
- CB — COLUMN BASE
- HD — HOLD DOWN ANCHOR
- MS — METAL STRAP
- H — JOIST/TRUSS/BEAM HANGER
- HC — HURRICANE CLIPS

COLUMN FOOTING SCHEDULE	
MARK	DESCRIPTION
F3.0	3'-0" x 3'-0" x 12" CONC. FTG W/ #4 @ 12" O.C. BOTT. EA. WAY
F3.5	3'-6" x 3'-6" x 12" CONC. FTG W/ #4 @ 12" O.C. BOTT. EA. WAY
F4.0	4'-0" x 4'-0" x 12" CONC. FTG W/ #5 @ 12" O.C. BOTT. EA. WAY

CONCRETE LINTEL SCHEDULE	
MARK	DESCRIPTION
CB812	8" x 12" CONC. LINTEL W/ (2) #5 CONT. @ BOTT.
CB1012	10" x 12" CONC. LINTEL W/ (2) #5 CONT. @ BOTT.

WALL FOOTING SCHEDULE	
MARK	DESCRIPTION
TS16	16" x 8" CONC. THICKENED SLAB W/ (2) #4 CONT. @ BOTT.
WF16	16" x 8" CONC. FTG. W/ (2) #4 CONT. @ BOTT.
WF18	18" x 8" CONC. FTG. W/ (2) #4 CONT. @ BOTT.
WF20	20" x 8" CONC. FTG. W/ (2) #4 CONT. @ BOTT.
WF24	24" x 8" CONC. FTG. W/ (2) #4 CONT. @ BOTT.

© COPYRIGHT 2016
Structural Engineering content of this drawings are property of structBIM LLC and are issued for this project only. Any re-use or re-production of these drawings shall not be done without written consent of structBIM LLC. These drawings are to be read in conjuction with project specifications and drawings from other consultants. These drawings shall not be used as shop drawings. Do not scale drawings, use dimensions as specified.

GTM ARCHITECTS

7735 OLD GEORGETOWN ROAD
SUITE 700
BETHESDA, MD 20814
(240)333-2000
(240)333-2001 FAX
WWW.GTMARCHITECTS.COM

Seal

STATE OF MARYLAND — SHAH KAMRAN — 40082 — PROFESSIONAL ENGINEER

Consultant

structBIM ENGINEERS
WE DESIGN....WE BIM
46400 BENEDICT DR, SUITE #211
PHONE: 703-657-4481
E-MAIL: info@structBIM.com

Project

21 HIGH STREET, LOT 3
BROOKVILLE, MD 20833

I certify that these documents were prepared or approved by me, and that I am a duly licensed Professional Engineer under the laws of the State of Maryland, license number 40082, Expiration Date: 02-13-2023.

Issue Description	*Date*

structBIM Project No.	21-0245
Checked By	KK
Drawn By	KK
Scale	1/4" = 1'-0"

Sheet Title

FOUNDATION PLAN

Sheet No.

S0

COPYRIGHT, 2016 structBIMEngineers, LLC.
PLOTTED ON: 4/18/2022 12:49:38 PM

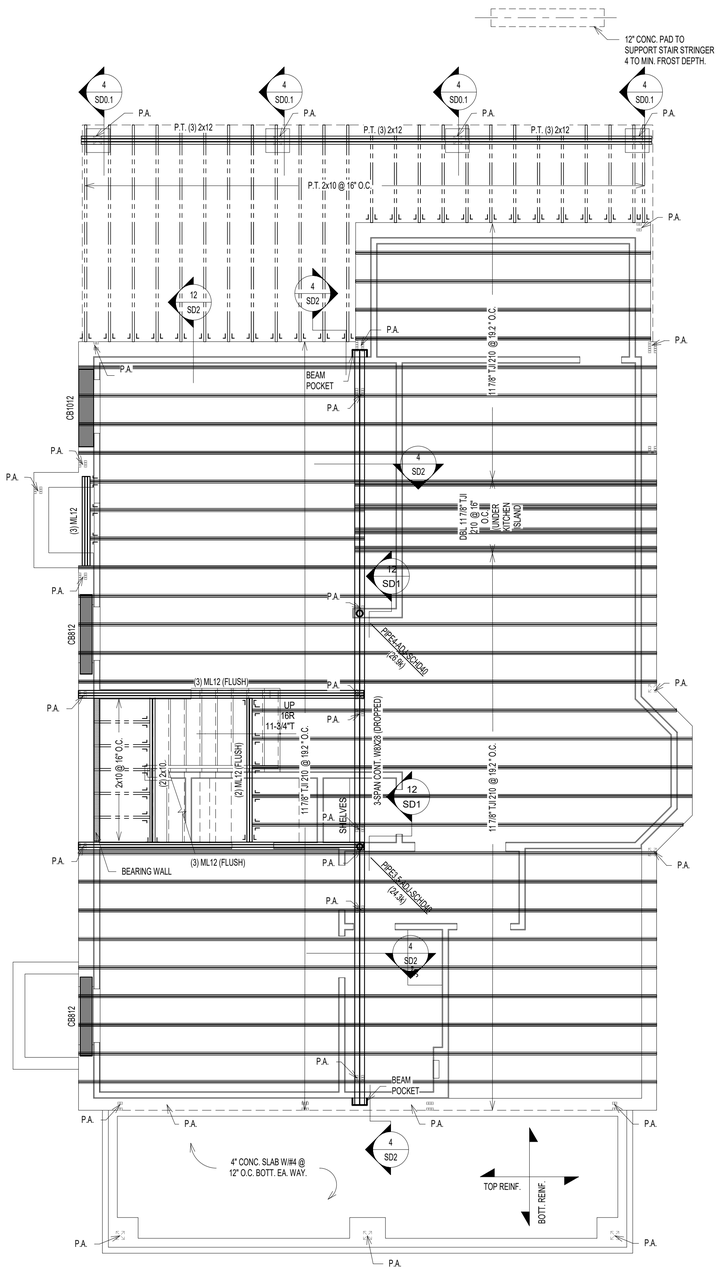

1 S1 FIRST FLOOR FRAMING PLAN
SCALE: 1/4" = 1'-0"

MICROLAM LVL BEAM SCHEDULE	
MARK	DESCRIPTION
(2) ML10	(2) 1 3/4" x 9 1/2" LVL - 1.9E
(2) ML12	(2) 1 3/4" x 11 7/8" LVL - 1.9E
(3) ML10	(3) 1 3/4" x 9 1/2" LVL - 1.9E
(3) ML12	(3) 1 3/4" x 11 7/8" LVL - 1.9E
(3) ML14	(3) 1 3/4" x 14" LVL - 1.9E
(3) ML18	(3) 1 3/4" x 18" LVL - 1.9E
(4) ML10	4) 1 3/4" x 9 1/2" LVL - 1.9E

PARALLAM PSL BEAM SCHEDULE	
MARK	DESCRIPTION

PARALLAM PSL POST SCHEDULE	
MARK	DESCRIPTION
PSL66	5 1/4" x 5 1/4" PSL 1.8E

STEEL COLUMN SCHEDULE	
MARK	DESCRIPTION
PIPE3.5-ADJ-SCHD40	3 1/2"Ø (O.D.) SCHEDULE 40 ADJUSTABLE STEEL PIPE COLUMN
PIPE4-ADJ-SCHD40	4"Ø (O.D.) SCHEDULE 40 ADJUSTABLE STEEL PIPE COLUMN

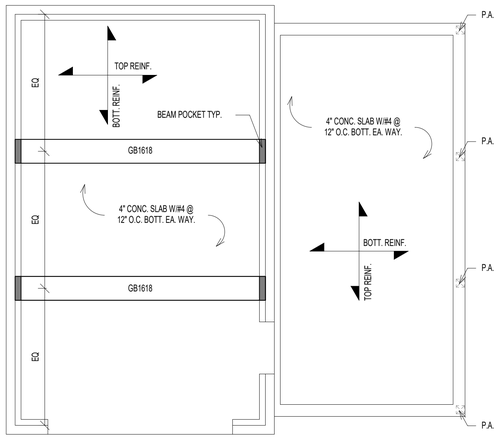

2 S1 FIRST FLOOR FRAMING PLAN @ GARAGE
SCALE: 1/4" = 1'-0"

NOTES:

1. FLOOR JOISTS SHALL BE SPACED @ 16" O.C. UNLESS NOTED OTHERWISE.
2. (J) INDICATED JACK STUDS & (S) INDICATES KING STUDS. EXAMPLE: 1J+1S = ONE JACK STUD & ONE KING STUD AT EACH END OF SPECIFIED HEADER.
3. FLOOR SHEATHING SHALL BE 3/4" APA RATED 3/4" T&G PLYWOOD WITH SPAN RATING OF 48/24 OR STURD-I-FLOOR WITH 24" O.C. GRADE.
4. WALL SHEATHING SHALL BE 7/16" APA RATED OSB/PLYWOOD CONTINUOUS SHEATHING W/ 8d NAILS @ 6" O.C.ON EDGES AND 12" O.C. IN-FIELD.
5. INSTALL BRIDGING BETWEEN JOISTS AT MID-SPAN OR AS REQUIRED PER MANUFACTURER BRIDGING BETWEEN JOISTS UNDER KITCHEN PLATFORMS AND CERAMIC TILE AREAS FOR MIN.THREE JOIST BAYS @ 8'-0" O.C. MAX.
6. FLOOR JOISTS SHALL HAVE 1/2" GYPSUM BOARD CEILING ATTACHED DIRECTLY TO UNDERSIDE OF BOTTOM FLANGE OF JOIST. NOTIFY ENGINEER OF ANY UNFINISHED AREAS.
7. ALL JOISTS ARE DESIGNED PER MIN. PRO RATING (BASED ON LEVEL WEYERHAEUSER PRO RATING CRITERIA) CRITERIA OF 38. NOTIFY ENGINEER, IF HIGHER PRO RATING IS REQURED.
8. INSTALL SQUASH BLOCKS AT EVERY BEARING LOCATION AND PROVIDE SOLID BLOCKING UNDER EVERY BEARING WALL FROM ABOVE AT ALL I JOISTS.
9. PROVIDE JOISTS AT MAX. 16" O.C. SPACING UNDER CERAMIC TILE AREAS. JOIST MANUFACTURER TO DESIGN JOISTS FOR DEFLECTION LIMIT OF L/720 OR 0.3" MAX. COORDINATE LOCATION OF CERAMIC TILE AREAS WITH ARCHITECTURAL DRAWINGS.
10. PROVIDE DOUBLE JOISTS UNDER KITCHEN ISLANDS. OVERSIZED BATH TUBS.
11. WEB STIFFENERS ARE REQUIRED WHEN INTERMEDIATE BEARING LENGTH IS LESS THAN 5 1/4" AND SPAN ON EITHER SIDE OF BEARING IS LARGER THAN REQUIRED PER JOIST MANUFACTURER.
12. PROTECT ALL UNTREATED WOOD FROM DIRECT CONTACT WITH CONCRETE OR MASONRY.
13. PROVIDE SQUASH BLOCKS ON BOTH SIDES AT BEARING WALL LOCATIONS WITH ONE 10d NAILS AT EACH FLANGE.
14. PROVIDE BLOCKING PANELS PER MANUFACTURER'S SPECIFICATIONS, IF JOISTS ARE SUPPORTING SHEAR WALL FROM ABOVE.
15. PROVIDE SOLID BLOCKING BETWEEN JOISTS WHEN SUPPORTING BEARING WALL FROM ABOVE.
16. PROVIDE BACKER/FILLER BLOCKS AS RECOMMENDED BY JOIST MANUFACTURER AT CONNECTION LOCATIONS OR MULTIPLE JOISTS SUPPORTING POSTS FROM ABOVE.
17. DO NOT CUT HOLES OR NOTCHES WITHOUT PRIOR APPROVAL FROM ENGINEER OR JOIST MANUFACTURER.
18. PROVIDE SOLID BLOCKING OF SAME SIZE WITHIN FLOOR SYSTEM UNDER ALL JACK STUDS, KING STUDS & POSTS FROM ABOVE.
19. PROVIDE MIN. (2) 2x12 UP TO 4'-0" SPAN, (2) ML10 FOR 4'-0" TO 6'-0" SPAN, (2) ML12 6'-0" TO 9'-0" SPAN WHERE BEAM SIZES ARE NOT SPECIFIED ON PLANS. ANY SPANS LARGER THAN 9'-0" SUPPORTING FRAMING AND NOT SPECIFIED ON PLANS SHALL BE NOTIFIED TO ENGINEER IMMEDIATELY.
20. PROVIDE MIN. DOUBLE JOISTS OR SPECIAL FLOOR TRUSS UNDER (2) 2x POSTS AND (2) PLY MICROLAM LVL OR SPECIAL FLOOR TRUSS TO MATCH FLOOR THICKNESS UNDER (3) 2x POSTS UNLESS NOTED OTHERWISE ON THE PLAN. CONTRACTOR SHALL NOTIFY ENGINEER FOR SUPPORTING STRUCTURAL MEMBER FOR ALL OTHER POST SIZES COMING FROM ABOVE.
21. PROVIDE MIN. (3) 2x POST UNDER BEAMS UNLESS NOTED OTHERWISE.
22. ALL POSTS SHALL CONTINUE DOWN TO FOUNDATION OR STRUCTURAL MEMBER SUCH AS BEAM/GIRDER TRUSS BELOW.
23. PROVIDE MIN. 3 JACK STUDS + 2 KING STUDS AT ALL HEADERS UNLESS NOTED OTHERWISE.
24. ALL WALL STUDS SHALL SPF#2 AND SHALL BE SPACED AT MAX. 16" O.C. UNLESS NOTED OTHERWISE.
25. ALL TWO STORY HIGH WALLS SHALL BE (2) 2x6 SPF#2 BALLOON FRAMED UNLESS NOTED OTHERWISE.
26. PROVIDE FULL HEIGHT BLOCKING BETWEEN JOISTS UP TO THREE JOIST BAYS WHERE JOISTS ARE PARALLEL TO FOUNDATION WALL.

PLAN LEGENDS & SYMBOLS:

- INDICATES BEARING WALL
- INDICATES DRAIN HOLE FROM ABOVE
- INDICATES JOIST/TRUSS HANEGR (REFER TO SHOP DWGS)
- INDICATES FRAMING DIRECTION
- INDICATES REBAR DIRECTION
- (_J+_S) — INDICATES NO. OF KING STUDS AT EACH END; INDICATES NO. OF JACK STUDS AT EACH END
- WF?? — INDICATES WALL FOOTING; WIDTH OF WALL FOOTING IN INCHES
- TS?? — INDICATES THICKENED SLAB; WIDTH OF THICKENED SLAB IN INCHES
- Fx.x — INDICATES ISOLATED COLUMN FOOTING; INDICATES SIZE OF FOOTING IN DECIMAL FEET
- ML?? — MICROLAM LVL 2.0E; DEPTH OF MICROLAM LVL IN INCHES
- LSL?? — LAMINATED STRAND LUMBER 1.7E; DEPTH OF TIMBERSTAND LSL BEAM IN INCHES
- PSL?? — PARALLAM STRAND LUMBER 2.0E; WIDTHxDEPTH OF MEMBER
- CC — COLUMN CAP
- CB — COLUMN BASE
- HD — HOLD DOWN ANCHOR
- MS — METAL STRAP
- H — JOIST/TRUSS/BEAM HANGER
- HC — HURRICANE CLIPS

© COPYRIGHT 2016
Structural Engineering content of this drawings are property of structBIM LLC and are issued for this project only. Any re-use or re-production of these drawings shall not be done without written consent of structBIM LLC. These drawings are to be read in conjuction with project specifications and drawings from other consultants. These drawings shall not be used as shop drawings. Do not scale drawings, use dimensions as specified.

GTM ARCHITECTS

7735 OLD GEORGETOWN ROAD
SUITE 700
BETHESDA, MD 20814
(240)333-2000
(240)333-2001 FAX
WWW.GTMARCHITECTS.COM

GTM

Seal

STATE OF MARYLAND — SHAH KAMAL — 40082 — PROFESSIONAL ENGINEER

Consultant

structBIM ENGINEERS
WE DESIGN....WE BIM
46400 BENEDICT DR, SUITE #211
PHONE: 703-657-4481
E-MAIL: info@structBIM.com

Project

21 HIGH STREET, LOT 3
BROOKVILLE, MD 20833

I certify that these documents were prepared or approved by me, and that I am a duly licensed Professional Engineer under the laws of the State of Maryland, license number 40082, Expiration Date: 02-13-2023.

Issue Description	*Date*

structBIM Project No.	21-0245
Checked By	KK
Drawn By	KK
Scale	1/4" = 1'-0"

Sheet Title
FIRST FLOOR FRAMING PLAN

Sheet No.

S1

COPYRIGHT, 2016 structBIMEngineers, LLC.
PLOTTED ON: 4/19/2022 12:49:42 PM

FILE NAME:

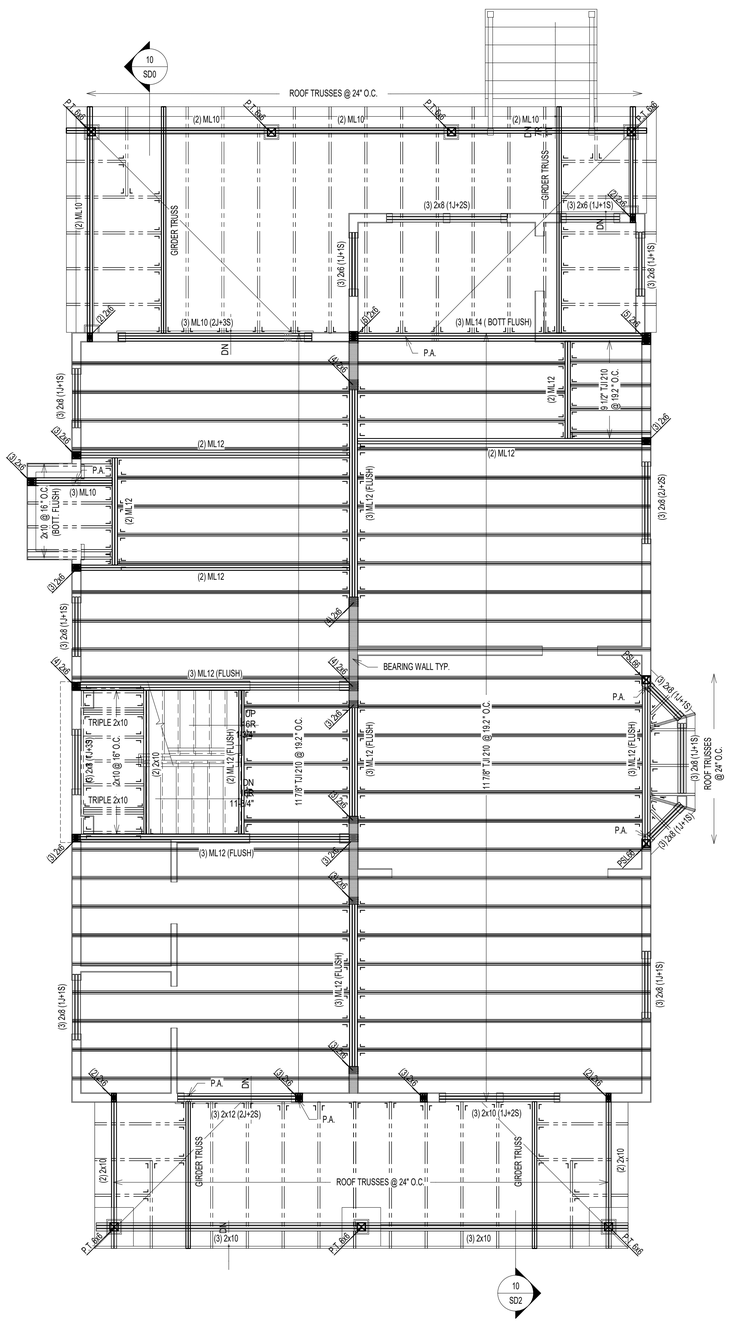

1 / S2 SECOND FLOOR FRAMING PLAN

SCALE: 1/4" = 1'-0"

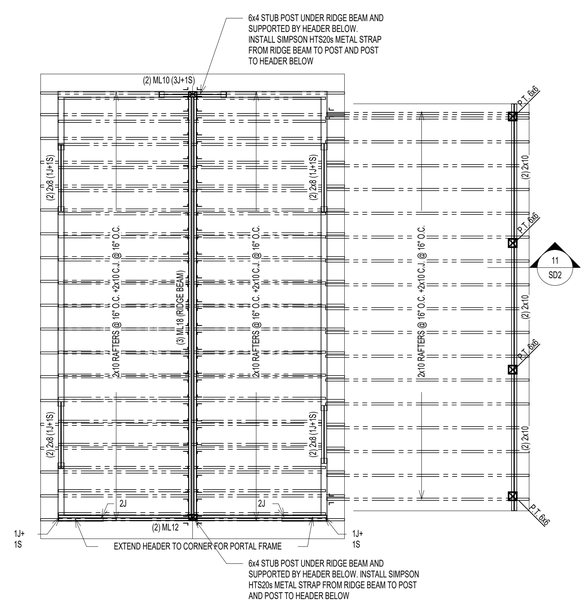

2 / S2 SECOND FLOOR FRAMING PLAN @ GARAGE

SCALE: 1/4" = 1'-0"

NOTES:

1. FLOOR JOISTS SHALL BE SPACED @ 16" O.C. UNLESS NOTED OTHERWISE.
2. (J) INDICATED JACK STUDS & (S) INDICATES KING STUDS. EXAMPLE: 1J+1S = ONE JACK STUD & ONE KING STUD AT EACH END OF SPECIFIED HEADER.
3. FLOOR SHEATHING SHALL BE 3/4" APA RATED 3/4" T&G PLYWOOD WITH SPAN RATING OF 48/24 OR STURD-I-FLOOR WITH 24" O.C. GRADE.
4. WALL SHEATHING SHALL BE 7/16" APA RATED OSB/PLYWOOD CONTINUOUS SHEATHING W/ 8d NAILS @ 6" O.C.ON EDGES AND 12" O.C. IN-FIELD.
5. INSTALL BRIDGING BETWEEN JOISTS AT MID-SPAN OR AS REQUIRED PER MANUFACTURER BRIDGING BETWEEN JOISTS UNDER KITCHEN PLATFORMS AND CERAMIC TILE AREAS FOR MIN.THREE JOIST BAYS @ 8'-0" O.C. MAX.
6. FLOOR JOISTS SHALL HAVE 1/2" GYPSUM BOARD CEILING ATTACHED DIRECTLY TO UNDERSIDE OF BOTTOM FLANGE OF JOIST. NOTIFY ENGINEER OF ANY UNFINISHED AREAS.
7. ALL JOISTS ARE DESIGNED PER MIN. PRO RATING (BASED ON I-LEVEL WEYERHAEUSER PRO RATING CRITERIA) CRITERIA OF 38. NOTIFY ENGINEER, IF HIGHER PRO RATING IS REQUIRED.
8. INSTALL SQUASH BLOCKS AT EVERY BEARING LOCATION AND PROVIDE SOLID BLOCKING UNDER EVERY BEARING WALL FROM ABOVE AT ALL JOISTS.
9. PROVIDE JOISTS AT MAX. 16" O.C. SPACING UNDER CERAMIC TILE AREAS. JOIST MANUFACTURER TO DESIGN JOISTS FOR DEFLECTION LIMIT OF L/720 OR 0.3" MAX. COORDINATE LOCATION OF CERAMIC TILE AREAS WITH ARCHITECTURAL DRAWINGS.
10. PROVIDE DOUBLE JOISTS UNDER KITCHEN ISLANDS. OVERSIZED BATH TUBS.
11. WEB STIFFENERS ARE REQUIRED WHEN INTERMEDIATE BEARING LENGTH IS LESS THAN 5 1/4" AND SPAN ON EITHER SIDE OF BEARING IS LARGER THAN REQUIRED PER JOIST MANUFACTURER.
12. PROTECT ALL UNTREATED WOOD FROM DIRECT CONTACT WITH CONCRETE OR MASONRY.
13. PROVIDE SQUASH BLOCKS ON BOTH SIDES AT BEARING WALL LOCATIONS WITH ONE 10d NAILS AT EACH FLANGE.
14. PROVIDE BLOCKING PANELS PER MANUFACTURER'S SPECIFICATIONS, IF JOISTS ARE SUPPORTING SHEAR WALL FROM ABOVE.
15. PROVIDE SOLID BLOCKING BETWEEN JOISTS WHEN SUPPORTING BEARING WALL FROM ABOVE.
16. PROVIDE BACKER/FILLER BLOCKS AS RECOMMENDED BY JOIST MANUFACTURER AT CONNECTION LOCATIONS OR MULTIPLE JOISTS SUPPORTING POSTS FROM ABOVE.
17. DO NOT CUT HOLES OR NOTCHES WITHOUT PRIOR APPROVAL FROM ENGINEER OR JOIST MANUFACTURER.
18. PROVIDE SOLID BLOCKING OF SAME SIZE WITHIN FLOOR SYSTEM UNDER ALL JACK STUDS, KING STUDS & POSTS FROM ABOVE.
19. PROVIDE MIN. (2) 2x12 UP TO 4'-0" SPAN, (2) ML10 FOR 4'-0" TO 6'-0" SPAN, (2) ML12 6'-0" TO 9'-0" SPAN WHERE BEAM SIZES ARE NOT SPECIFIED ON PLANS. ANY SPANS LARGER THAN 9'-0" SUPPORTING FRAMING AND NOT SPECIFIED ON PLANS SHALL BE NOTIFIED TO ENGINEER IMMEDIATELY.
20. PROVIDE MIN. DOUBLE JOISTS OR SPECIAL FLOOR TRUSS UNDER (2) 2x POSTS AND (2) PLY MICROLAM LVL OR SPECIAL FLOOR TRUSS TO MATCH FLOOR THICKNESS UNDER (3) 2x POSTS UNLESS NOTED OTHERWISE ON THE PLAN. CONTRACTOR SHALL NOTIFY ENGINEER FOR SUPPORTING STRUCTURAL MEMBER FOR ALL OTHER POST SIZES COMING FROM ABOVE.
21. PROVIDE MIN. (3) 2x POST UNDER BEAMS UNLESS NOTED OTHERWISE.
22. ALL POSTS SHALL CONTINUE DOWN TO FOUNDATION OR STRUCTURAL MEMBER SUCH AS BEAM/GIRDER TRUSS BELOW.
23. PROVIDE MIN. 3 JACK STUDS + 2 KING STUDS AT ALL HEADERS UNLESS NOTED OTHERWISE.
24. ALL WALL STUDS SHALL SPF#2 AND SHALL BE SPACED AT MAX. 16" O.C. UNLESS NOTED OTHERWISE.
25. ALL TWO STORY HIGH WALLS SHALL BE (2) 2x6 SPF#2 BALLOON FRAMED UNLESS NOTED OTHERWISE.
26. PROVIDE FULL HEIGHT BLOCKING BETWEEN JOISTS UP TO THREE JOIST BAYS WHERE JOISTS ARE PARALLEL TO FOUNDATION WALL.

PLAN LEGENDS & SYMBOLS:

- INDICATES BEARING WALL
- INDICATES DRAIN HOLE FROM ABOVE
- INDICATES JOIST/TRUSS HANEGR (REFER TO SHOP DWGS)
- INDICATES FRAMING DIRECTION
- INDICATES REBAR DIRECTION
- (_J+_S) — INDICATES NO. OF KING STUDS AT EACH END; INDICATES NO. OF JACK STUDS AT EACH END
- WF?? — INDICATES WALL FOOTING; WIDTH OF WALL FOOTING IN INCHES
- TS?? — INDICATES THICKENED SLAB; WIDTH OF THICKENED SLAB IN INCHES
- Fx.x — INDICATES ISOLATED COLUMN FOOTING; INDICATES SIZE OF FOOTING IN DECIMAL FEET
- ML?? — MICROLAM LVL 2.0E; DEPTH OF MICROLAM LVL IN INCHES
- LSL?? — LAMINATED STRAND LUMBER 1.7E; DEPTH OF TIMBERSTAND LSL BEAM IN INCHES
- PSL?? — PARALLAM STRAND LUMBER 2.0E; WIDTHxDEPTH OF MEMBER
- CC — COLUMN CAP
- CB — COLUMN BASE
- HD — HOLD DOWN ANCHOR
- MS — METAL STRAP
- H — JOIST/TRUSS/BEAM HANGER
- HC — HURRICANE CLIPS

MICROLAM LVL BEAM SCHEDULE

MARK	DESCRIPTION
(2) ML10	(2) 1 3/4" x 9 1/2" LVL - 1.9E
(2) ML12	(2) 1 3/4" x 11 7/8" LVL - 1.9E
(3) ML10	(3) 1 3/4" x 9 1/2" LVL - 1.9E
(3) ML12	(3) 1 3/4" x 11 7/8" LVL - 1.9E
(3) ML14	(3) 1 3/4" x 14" LVL - 1.9E
(3) ML18	(3) 1 3/4" x 18" LVL - 1.9E
(4) ML10	4) 1 3/4" x 9 1/2" LVL - 1.9E

PARALLAM PSL BEAM SCHEDULE

MARK	DESCRIPTION

PARALLAM PSL POST SCHEDULE

MARK	DESCRIPTION
PSL66	5 1/4" x 5 1/4" PSL 1.8E

STEEL COLUMN SCHEDULE

MARK	DESCRIPTION
PIPE3.5-ADJ-SCHD40	3 1/2"Ø (O.D.) SCHEDULE 40 ADJUSTABLE STEEL PIPE COLUMN
PIPE4-ADJ-SCHD40	4"Ø (O.D.) SCHEDULE 40 ADJUSTABLE STEEL PIPE COLUMN

© COPYRIGHT 2016
Structural Engineering content of this drawings are property of structBIM LLC and are issued for this project only. Any re-use or re-production of these drawings shall not be done without written consent of structBIM LLC. These drawings are to be read in conjuction with project specifications and drawings from other consultants. These drawings shall not be used as shop drawings. Do not scale drawings, use dimensions as specified.

GTM ARCHITECTS

7735 OLD GEORGETOWN ROAD
SUITE 700
BETHESDA, MD 20814
(240)333-2000
(240)333-2001 FAX
WWW.GTMARCHITECTS.COM

GTM

Seal

STATE OF MARYLAND · VISHAL KANOJIA · 40082 · PROFESSIONAL ENGINEER

Consultant

structBIM ENGINEERS
WE DESIGN....WE BIM
46400 BENEDICT DR, SUITE #211
PHONE: 703-657-4481
E-MAIL: info@structBIM.com

Project

21 HIGH STREET, LOT 3
BROOKVILLE, MD 20833

I certify that these documents were prepared or approved by me, and that I am a duly licensed Professional Engineer under the laws of the State of Maryland, license number 40082, Expiration Date: 02-13-2023.

Issue Description	*Date*

structBIM Project No.	21-0245
Checked By	KK
Drawn By	KK
Scale	1/4" = 1'-0"

Sheet Title
SECOND FLOOR FRAMING PLAN

Sheet No.

S2

COPYRIGHT, 2016 structBIMEngineers, LLC.

PLOTTED ON: 4/19/2022 12:45:47 PM

FILE NAME:

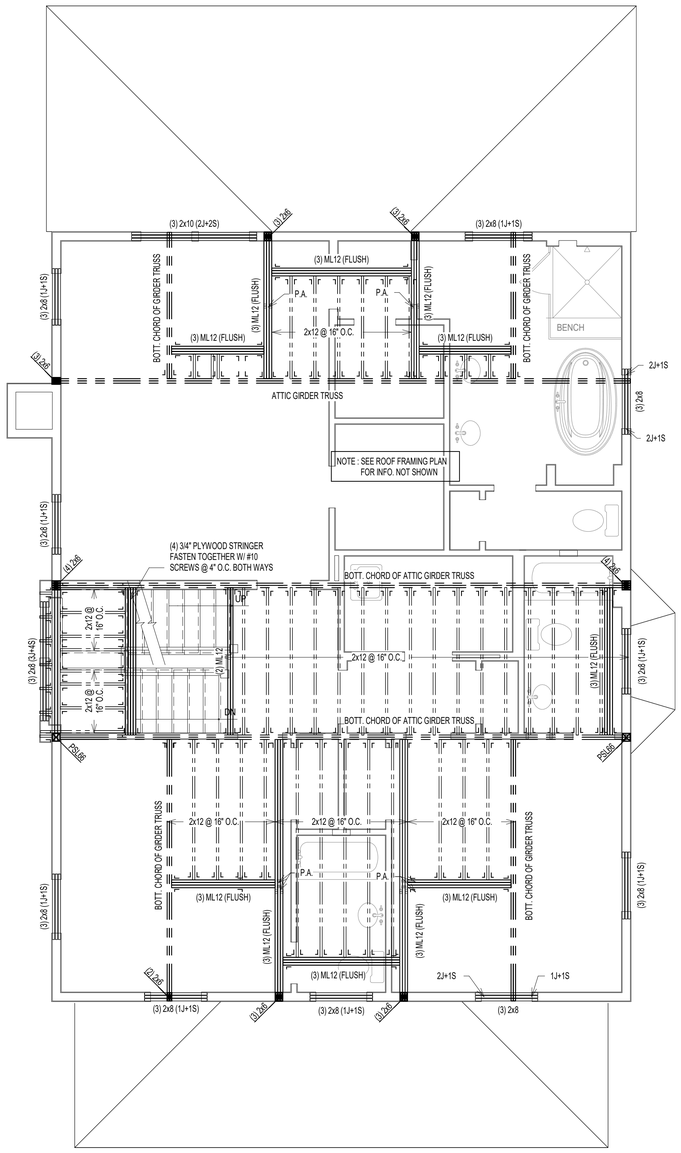

1 / S3 LOFT FLOOR FRAMING PLAN
SCALE: 1/4" = 1'-0"

NOTES:

1. ALL TRUSSES SHALL BE PRE-FABRICATED ENGINEERED ROOF TRUSSES AND SHALL BE INSTALLED PER TRUSS MANUFACTURER'S LAYOUT AND DESIGN. SUBMIT SIGNED AND SEALED SHOP DRAWINGS FOR REVIEW.
2. ALL ROOF SHEATHING SHALL BE APA RATED 7/16" C-C, C-D OR STRUCTURAL II WITH SPAN RATING OF 48/24 PER "AMERICAN PLYWOOD ASSOCIATION". PROVIDE MIN. NAILING PATTERN W/ 8d COMMON NAILS @ 6" O.C. ON EDGES AND 12" O.C. IN FIELD. PROVIDE PLYWOOD CLIPS AT PLYWOOD EDGES BETWEEN EACH FRAMING MEMBER.
3. TRUSS LAYOUT SHOWN ON THESE DRAWINGS ARE FOR SCHEMATIC PURPOSES ONLY AND TO REFLECT DESIGN INTENT FOR OTHER FRAMING MEMBERS. THESE DRAWINGS SHALL NOT BE CONSIDERED AS SHOP DRAWINGS. TRUSS DESIGN DRAWINGS PREPARED BY TRUSS MANUFACTURER SHALL BE USED FOR TRUSS LAYOUT AND COORDINATION. NOTIFY ENGINEER IF VARIATION IS MADE IN TRUSS DESIGN DRAWINGS THAT AFFECTS ORIGINAL DESIGN INTENT.
4. COORDINATE ROOF SLOPES, VALLEYS, HEEL HEIGHTS WITH ARCHITECTURAL DRAWINGS.
5. INSTALL MINIMUM H2.5A HURRICANE CLIPS AT EACH TRUSS BEARING UNLESS SPECIFIED ON SHOP DRAWINGS.
6. AT ALL NON LOAD BEARING WALLS MAINTAIN 1/4" GAP BETWEEN BOTTOM OF TRUSS BOTTOM CHORD AND TOP OF TOP PLATE. INSTALL SIMPSON "STC" TRUSS CLIPS TO MAINTAIN GAP TO ALLOW TRUSS MOVEMENT.
7. ALL SECTIONS/DETAIL CUTS MARKED AS TYP. SHALL BE APPLIED AT ALL SIMILAR CONDITIONS ON ENTIRE PLAN.
8. TRUSS MANUFACTURER TO DESIGN NECESSARY TEMPORARY/PERMENANT BRACING AND SHALL SPECIFY ON SHOP DRAWINGS.
9. TRUSS MANUFACTURER TO SPECIFY NECESSARY CONNECTORS AND FASTENERS FOR ALL CONNECTIONS INCLUDING BUT NOT LIMITED TO UPLIFT CONNECTORS, HANGERS.
10. PROVIDE SOLID BLOCKING OF SAME SIZE WITHIN FLOOR SYSTEM UNDER ALL JACK STUDS, KING STUDS & POSTS FROM ABOVE.
11. PROVIDE MIN. (3) 2x POST UNDER ALL GIRDER TRUSSES UNLESS NOTED OTHERWISE.
12. PROVIDE MIN. TWO JACK STUDS + TWO KING STUDS AT ALL HEADERS UNLESS NOTED OTHERWISE.
13. ALL WALL STUDS SHALL BE SPFI#2 OR EQ. APPROVED AND SPACED AT MAX. 16" O.C. UNLESS NOTED OTHERWISE.

PLAN LEGENDS & SYMBOLS:

- INDICATES BEARING WALL
- INDICATES DRAIN HOLE FROM ABOVE
- INDICATES JOIST/TRUSS HANEGR (REFER TO SHOP DWGS)
- INDICATES FRAMING DIRECTION
- INDICATES REBAR DIRECTION
- (_J+_S) — INDICATES NO. OF KING STUDS AT EACH END; INDICATES NO. OF JACK STUDS AT EACH END
- WF?? — INDICATES WALL FOOTING; WIDTH OF WALL FOOTING IN INCHES
- TS?? — INDICATES THICKENED SLAB; WIDTH OF THICKENED SLAB IN INCHES
- F.x.x — INDICATES ISOLATED COLUMN FOOTING; INDICATES SIZE OF FOOTING IN DECIMAL FEET
- ML?? — MICROLAM LVL 2.0E; DEPTH OF MICROLAM LVL IN INCHES
- LSL?? — LAMINATED STRAND LUMBER 1.7E; DEPTH OF TIMBERSTAND LSL BEAM IN INCHES
- PSL?? — PARALLAM STRAND LUMBER 2.0E; WIDTHxDEPTH OF MEMBER
- CC — COLUMN CAP
- CB — COLUMN BASE
- HD — HOLD DOWN ANCHOR
- MS — METAL STRAP
- H — JOIST/TRUSS/BEAM HANGER
- HC — HURRICANE CLIPS

MICROLAM LVL BEAM SCHEDULE

MARK	DESCRIPTION
(2) ML10	(2) 1 3/4" x 9 1/2" LVL - 1.9E
(2) ML12	(2) 1 3/4" x 11 7/8" LVL - 1.9E
(3) ML10	(3) 1 3/4" x 9 1/2" LVL - 1.9E
(3) ML12	(3) 1 3/4" x 11 7/8" LVL - 1.9E
(3) ML14	(3) 1 3/4" x 14" LVL - 1.9E
(3) ML18	(3) 1 3/4" x 18" LVL - 1.9E
(4) ML10	(4) 1 3/4" x 9 1/2" LVL - 1.9E

PARALLAM PSL BEAM SCHEDULE

MARK	DESCRIPTION

PARALLAM PSL POST SCHEDULE

MARK	DESCRIPTION
PSL66	5 1/4" x 5 1/4" PSL 1.8E

STEEL COLUMN SCHEDULE

MARK	DESCRIPTION
PIPE3.5-ADJ-SCHD40	3 1/2"Ø (O.D.) SCHEDULE 40 ADJUSTABLE STEEL PIPE COLUMN
PIPE4-ADJ-SCHD40	4"Ø (O.D.) SCHEDULE 40 ADJUSTABLE STEEL PIPE COLUMN

© COPYRIGHT 2016
Structural Engineering content of this drawings are property of structBIM LLC and are issued for this project only. Any re-use or re-production of these drawings shall not be done without written consent of structBIM LLC. These drawings are to be read in conjuction with project specifications and drawings from other consultants. These drawings shall not be used as shop drawings. Do not scale drawings, use dimensions as specified.

GTM ARCHITECTS

7735 OLD GEORGETOWN ROAD
SUITE 700
BETHESDA, MD 20814
(240)333-2000
(240)333-2001 FAX
WWW.GTMARCHITECTS.COM

GTM

Seal

STATE OF MARYLAND — KISHAL KANDEL — 40082 — PROFESSIONAL ENGINEER

Consultant

structBIM ENGINEERS
WE DESIGN....WE BIM
46400 BENEDICT DR, SUITE #211
PHONE: 703-657-4481
E-MAIL: info@structBIM.com

Project

21 HIGH STREET, LOT 3
BROOKVILLE, MD 20833

I certify that these documents were prepared or approved by me, and that I am a duly licensed Professional Engineer under the laws of the State of Maryland, license number 40082, Expiration Date: 02-13-2023.

Issue Description	*Date*

structBIM Project No.	21-0245
Checked By	KK
Drawn By	KK
Scale	1/4" = 1'-0"

Sheet Title
LOFT FLOOR FRAMING PLAN

Sheet No.
S3

COPYRIGHT, 2016 structBIMEngineers, LLC.
PLOTTED ON: 4/13/2022 12:49:50 PM

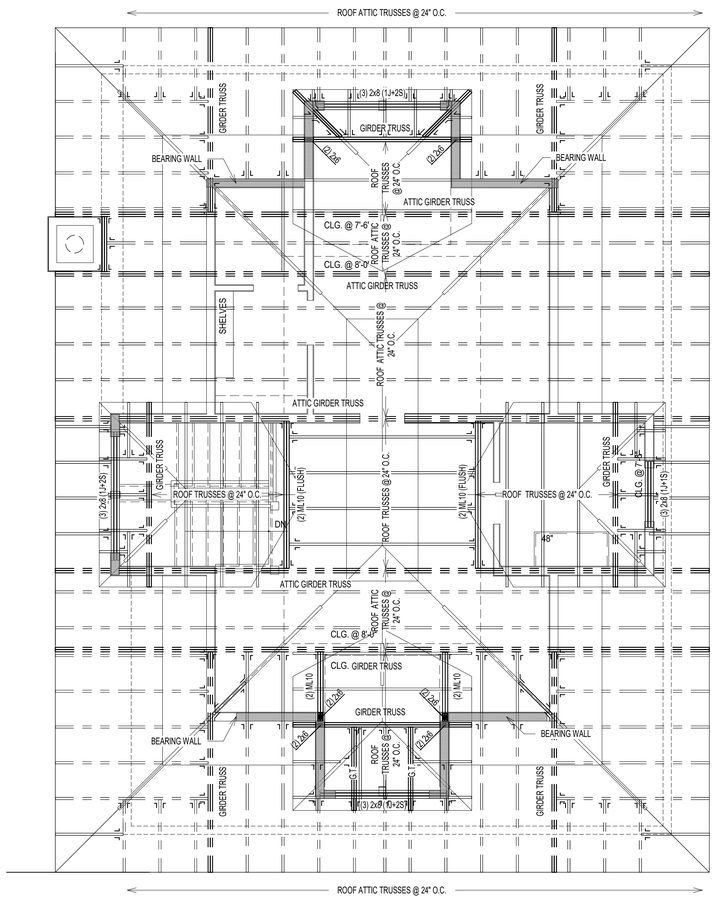

1 / S4 ROOF FRAMING PLAN
SCALE: 1/4" = 1'-0"

NOTES:

1. ALL TRUSSES SHALL BE PRE-FABRICATED ENGINEERED ROOF TRUSSES AND SHALL BE INSTALLED PER TRUSS MANUFACTURER'S LAYOUT AND DESIGN. SUBMIT SIGNED AND SEALED SHOP DRAWINGS FOR REVIEW.
2. ALL ROOF SHEATHING SHALL BE APA RATED 7/16" C-C, C-D OR STRUCTURAL II WITH SPAN RATING OF 48/24 PER "AMERICAN PLYWOOD ASSOCIATION". PROVIDE MIN. NAILING PATTERN W/ 8d COMMON NAILS @ 6" O.C. ON EDGES AND 12" O.C. IN FIELD. PROVIDE PLYWOOD CLIPS AT PLYWOOD EDGES BETWEEN EACH FRAMING MEMBER.
3. TRUSS LAYOUT SHOWN ON THESE DRAWINGS ARE FOR SCHEMATIC PURPOSES ONLY AND TO REFLECT DESIGN INTENT FOR OTHER FRAMING MEMBERS. THESE DRAWINGS SHALL NOT BE CONSIDERED AS SHOP DRAWINGS. TRUSS DESIGN DRAWINGS PREPARED BY TRUSS MANUFACTURER SHALL BE USED FOR TRUSS LAYOUT AND COORDINATION. NOTIFY ENGINEER IF VARIATION IS MADE IN TRUSS DESIGN DRAWINGS THAT AFFECTS ORIGINAL DESIGN INTENT.
4. COORDINATE ROOF SLOPES, VALLEYS, HEEL HEIGHTS WITH ARCHITECTURAL DRAWINGS.
5. INSTALL MINIMUM H2.5A HURRICANE CLIPS AT EACH TRUSS BEARING UNLESS SPECIFIED ON SHOP DRAWINGS.
6. AT ALL NON LOAD BEARING WALLS MAINTAIN 1/4" GAP BETWEEN BOTTOM OF TRUSS BOTTOM CHORD AND TOP OF TOP PLATE. INSTALL SIMPSON "STC" TRUSS CLIPS TO MAINTAIN GAP TO ALLOW TRUSS MOVEMENT.
7. ALL SECTIONS/DETAIL CUTS MARKED AS TYP. SHALL BE APPLIED AT ALL SIMILAR CONDITIONS ON ENTIRE PLAN.
8. TRUSS MANUFACTURER TO DESIGN NECESSARY TEMPORARY/PERMENANT BRACING AND SHALL SPECIFY ON SHOP DRAWINGS.
9. TRUSS MANUFACTURER TO SPECIFY NECESSARY CONNECTORS AND FASTENERS FOR ALL CONNECTIONS INCLUDING BUT NOT LIMITED TO UPLIFT CONNECTORS, HANGERS.
10. PROVIDE SOLID BLOCKING OF SAME SIZE WITHIN FLOOR SYSTEM UNDER ALL JACK STUDS, KING STUDS & POSTS FROM ABOVE.
11. PROVIDE MIN. (3) 2x POST UNDER ALL GIRDER TRUSSES UNLESS NOTED OTHERWISE.
12. PROVIDE MIN. TWO JACK STUDS + TWO KING STUDS AT ALL HEADERS UNLESS NOTED OTHERWISE.
13. ALL WALL STUDS SHALL BE SPF#2 OR EQ. APPROVED AND SPACED AT MAX. 16" O.C. UNLESS NOTED OTHERWISE.

PLAN LEGENDS & SYMBOLS:

- INDICATES BEARING WALL
- INDICATES DRAIN HOLE FROM ABOVE
- INDICATES JOIST/TRUSS HANEGR (REFER TO SHOP DWGS)
- INDICATES FRAMING DIRECTION
- INDICATES REBAR DIRECTION
- (_J+_S) — INDICATES NO. OF KING STUDS AT EACH END; INDICATES NO. OF JACK STUDS AT EACH END
- WF?? — INDICATES WALL FOOTING; WIDTH OF WALL FOOTING IN INCHES
- TS?? — INDICATES THICKENED SLAB; WIDTH OF THICKENED SLAB IN INCHES
- Fx.x — INDICATES ISOLATED COLUMN FOOTING; INDICATES SIZE OF FOOTING IN DECIMAL FEET
- ML?? — MICROLAM LVL 2.0E; DEPTH OF MICROLAM LVL IN INCHES
- LSL?? — LAMINATED STRAND LUMBER 1.7E; DEPTH OF TIMBERSTAND LSL BEAM IN INCHES
- PSL?? — PARALLAM STRAND LUMBER 2.0E; WIDTHxDEPTH OF MEMBER
- CC — COLUMN CAP
- CB — COLUMN BASE
- HD — HOLD DOWN ANCHOR
- MS — METAL STRAP
- H — JOIST/TRUSS/BEAM HANGER
- HC — HURRICANE CLIPS

MICROLAM LVL BEAM SCHEDULE

MARK	DESCRIPTION
(2) ML10	(2) 1 3/4" x 9 1/2" LVL - 1.9E
(2) ML12	(2) 1 3/4" x 11 7/8" LVL - 1.9E
(3) ML10	(3) 1 3/4" x 9 1/2" LVL - 1.9E
(3) ML12	(3) 1 3/4" x 11 7/8" LVL - 1.9E
(3) ML14	(3) 1 3/4" x 14" LVL - 1.9E
(3) ML18	(3) 1 3/4" x 18" LVL - 1.9E
(4) ML10	4) 1 3/4" x 9 1/2" LVL - 1.9E

PARALLAM PSL BEAM SCHEDULE

MARK	DESCRIPTION

PARALLAM PSL POST SCHEDULE

MARK	DESCRIPTION
PSL66	5 1/4" x 5 1/4" PSL 1.8E

STEEL COLUMN SCHEDULE

MARK	DESCRIPTION
PIPE3.5-ADJ-SCHD40	3 1/2"Ø (O.D.) SCHEDULE 40 ADJUSTABLE STEEL PIPE COLUMN
PIPE4-ADJ-SCHD40	4"Ø (O.D.) SCHEDULE 40 ADJUSTABLE STEEL PIPE COLUMN

© COPYRIGHT 2016
Structural Engineering content of this drawings are property of structBIM LLC and are issued for this project only. Any re-use or re-production of these drawings shall not be done without written consent of structBIM LLC. These drawings are to be read in conjuction with project specifications and drawings from other consultants. These drawings shall not be used as shop drawings. Do not scale drawings, use dimensions as specified.

GTM ARCHITECTS

7735 OLD GEORGETOWN ROAD
SUITE 700
BETHESDA, MD 20814
(240)333-2000
(240)333-2001 FAX
WWW.GTMARCHITECTS.COM

GTM

Seal

STATE OF MARYLAND — VISHAL KANOJIA — 40082 — PROFESSIONAL ENGINEER

Consultant

structBIM ENGINEERS
WE DESIGN....WE BIM
46400 BENEDICT DR, SUITE #211
PHONE: 703-657-4481
E-MAIL: info@structBIM.com

Project

21 HIGH STREET, LOT 3
BROOKVILLE, MD 20833

I certify that these documents were prepared or approved by me, and that I am a duly licensed Professional Engineer under the laws of the State of Maryland, license number 40082, Expiration Date: 02-13-2023.

Issue Description	*Date*

structBIM Project No.	21-0245
Checked By	KK
Drawn By	KK
Scale	1/4" = 1'-0"

Sheet Title

ROOF FRAMING PLAN

Sheet No.

S4

COPYRIGHT, 2016 structBIMEngineers, LLC.

PLOTTED ON: 4/15/2022 12:49:53 PM

FILE NAME:

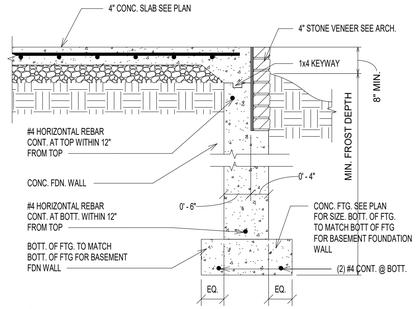

9 / SD0 SD0_12_FNDN_CONC_PORCH1
SCALE: 3/4" = 1'-0"

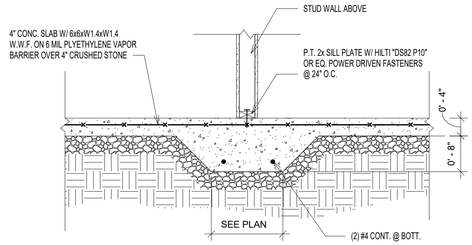

5 / SD0 INT. WALL THICKENED SLAB
SCALE: 3/4" = 1'-0"

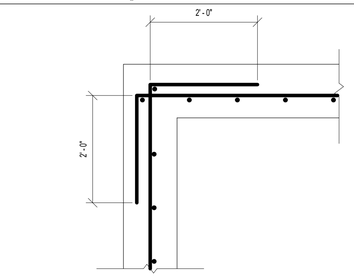

TYP. CORNER REINFORCEMENT DETAIL (PLAN VIEW)

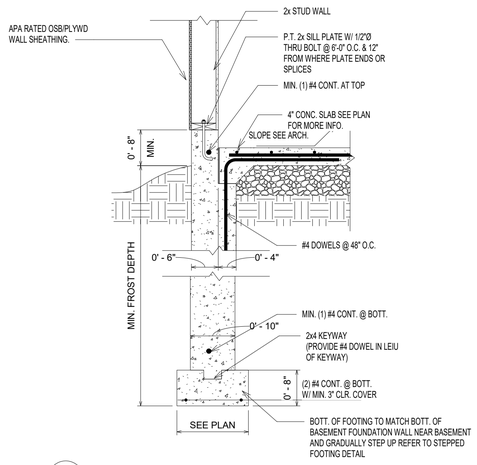

10 / SD0 TYP. FOUNDATION WALL @ GARAGE W/ SIDING
SCALE: 3/4" = 1'-0"

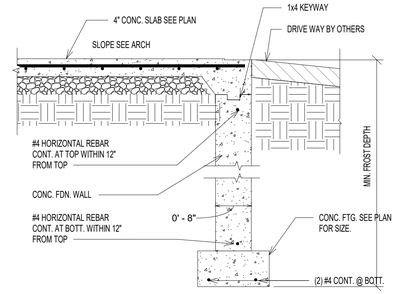

6 / SD0 FOUNDATION WALL @ GARAGE ENTRY
SCALE: 3/4" = 1'-0"

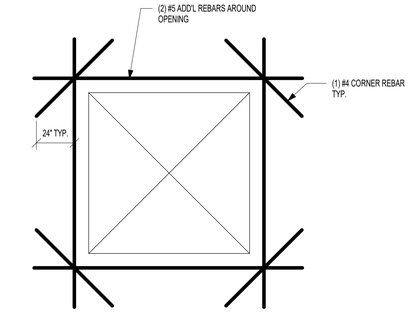

TYP. REINFORCEMENT AROUND OEPNING(ELEVATION VIEW)

1 / SD0 TYP. REINFORCEMENT AT WALL CORNER & OPENING
SCALE: 3/4" = 1'-0"

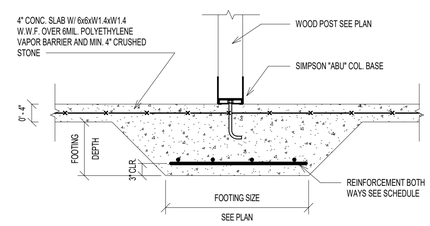

7 / SD0 TYPICAL WOOD COLUMN FOOTING
SCALE: 3/4" = 1'-0"

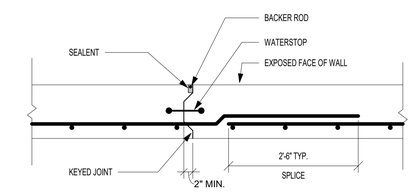

NOTE: PROVIDE CONSTRUCTION OR CONTROL JOINTS IN FOUNDATION WALLS AT EVERY 40'-0" TYPICAL.

2 / SD0 TYP CONTROL JOINT @ FOUNDATION WALL
SCALE: 3/4" = 1'-0"

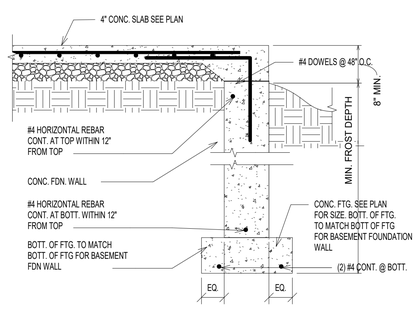

11 / SD0 SECTION
SCALE: 3/4" = 1'-0"

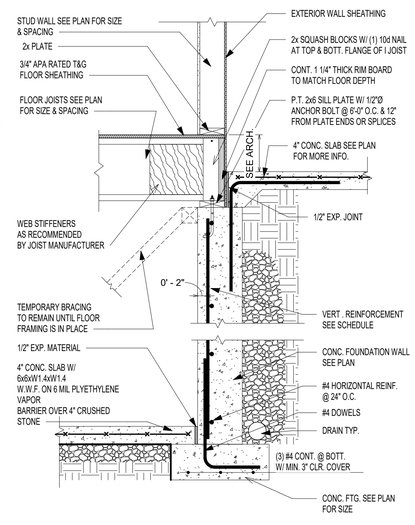

8 / SD0 TYP. FOUNDATION WALL SECTION @ PORCH
SCALE: 3/4" = 1'-0"

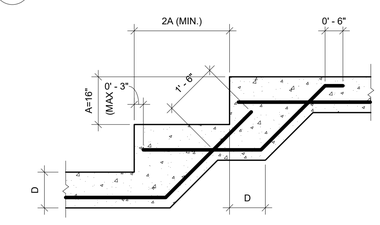

NOTE: SEE PLAN FOR REINFORCING AND OTHER INFO.

3 / SD0 TYP. STEPPED FOOTING DETAIL
SCALE: 1/2" = 1'-0"

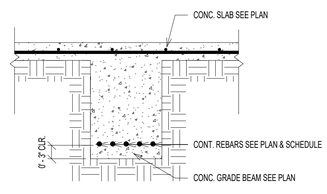

12 / SD0 TYP. GRADE BEAM DETAIL
SCALE: 3/4" = 1'-0"

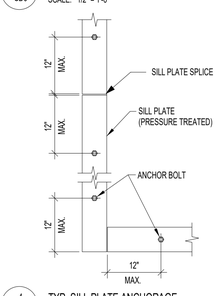

NOTES:

1. MINIMUM SILL BOLTING TO CONCRETE SHALL BE 1/2"Ø ANCHOR BOLTS, OR EQUAL, AT 6'-0" O.C. WITH 7" MINIMUM EMBEDMENT.

2. ALL ANCHORS FOR SILL PLATES SUPPORTING SHEAR WALLS (SW) SHALL HAVE MIN. 3"x3" STEEL WASHERS AND SHALL EXTEND A MINIMUM OF 2" ABOVE TOP OF SILL.

3. PROVIDE MINIMUM (2) BOLTS PER PIECE.

4. SEE OTHER DETAILS FOR USE OF MUDSILL ANCHORS IN LIEU OF ANCHOR BOLTS.

4 / SD0 TYP. SILL PLATE ANCHORAGE
SCALE: 3/4" = 1'-0"

© COPYRIGHT 2016
Structural Engineering content of this drawings are property of structBIM LLC and are issued for this project only. Any re-use or re-production of these drawings shall not be done without written consent of structBIM LLC. These drawings are to be read in conjuction with project specifications and drawings from other consultants. These drawings shall not be used as shop drawings. Do not scale drawings, use dimensions as specified.

GTM ARCHITECTS

7735 OLD GEORGETOWN ROAD
SUITE 700
BETHESDA, MD 20814
(240)333-2000
(240)333-2001 FAX
WWW.GTMARCHITECTS.COM

GTM

Seal

STATE OF MARYLAND · KISHAL KANDEL · 40082 · PROFESSIONAL ENGINEER

Consultant

structBIM ENGINEERS
WE DESIGN....WE BIM
46400 BENEDICT DR, SUITE #211
PHONE: 703-657-4481
E-MAIL: info@structBIM.com

Project

21 HIGH STREET, LOT 3
BROOKVILLE, MD 20833

I certify that these documents were prepared or approved by me, and that I am a duly licensed Professional Engineer under the laws of the State of Maryland, license number 40082, Expiration Date: 02-13-2023.

Issue Description	*Date*

structBIM Project No.	21-0245
Checked By	KK
Drawn By	KK
Scale	As indicated

Sheet Title

FOUNDATION DETAILS

Sheet No.

SD0

COPYRIGHT, 2016 structBIMEngineers, LLC.

PLOTTED ON: 4/15/2022 12:49:58 PM

FILE NAME:

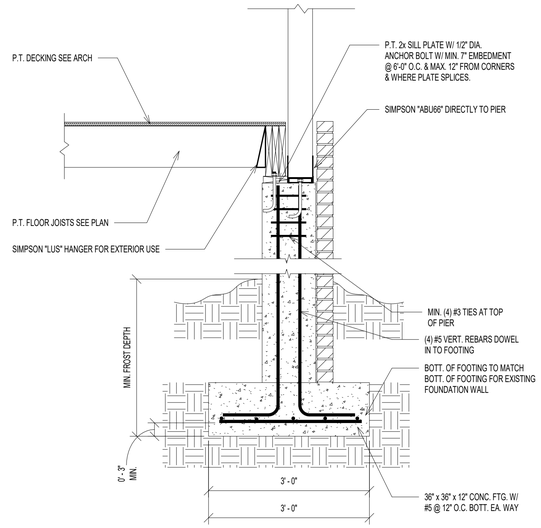

4 SD0.1 SECTION
SCALE: 3/4" = 1'-0"

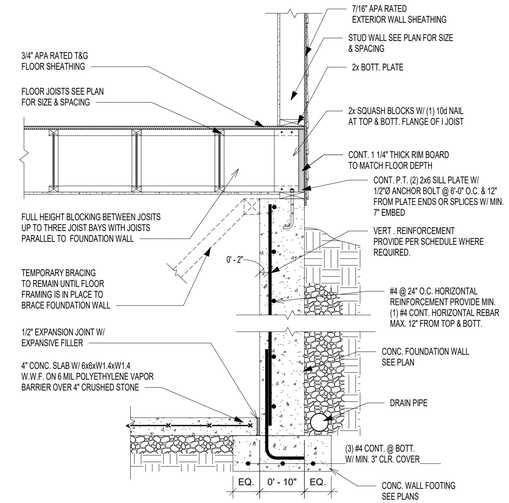

1 SD0.1 TYP. FOUNDATION WALL SECTION
SCALE: 3/4" = 1'-0"

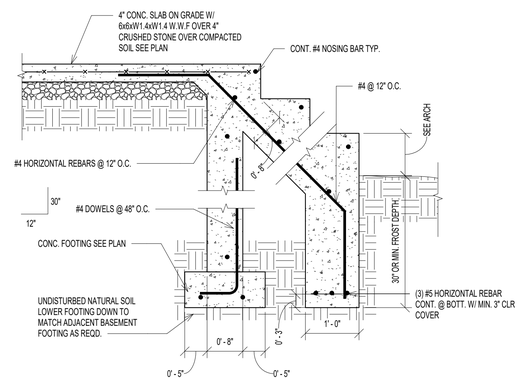

NOTE: VERIFY STEPS AND GRADE WITH ARCHITECTURAL DRAWINGS.

5 SD0.1 STEPS @ PORCH
SCALE: 3/4" = 1'-0"

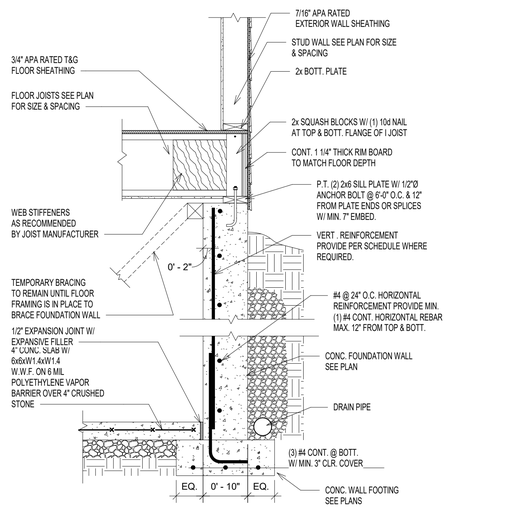

2 SD0.1 TYP. FOUNDATION WALL SECTION
SCALE: 3/4" = 1'-0"

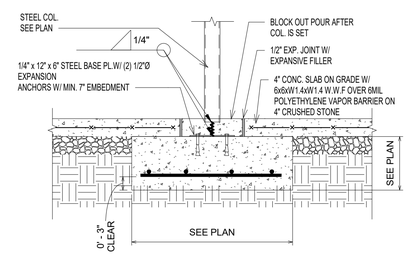

3 SD0.1 ISOLATED COLUMN FOOTING
SCALE: 3/4" = 1'-0"

© COPYRIGHT 2016
Structural Engineering content of this drawings are property of structBIM LLC and are issued for this project only. Any re-use or re-production of these drawings shall not be done without written consent of structBIM LLC. These drawings are to be read in conjuction with project specifications and drawings from other consultants. These drawings shall not be used as shop drawings. Do not scale drawings, use dimensions as specified.

GTM ARCHITECTS

7735 OLD GEORGETOWN ROAD
SUITE 700
BETHESDA, MD 20814
(240)333-2000
(240)333-2001 FAX
WWW.GTMARCHITECTS.COM

Seal

STATE OF MARYLAND · VISHAL KANOJIA · 40082 · PROFESSIONAL ENGINEER

Consultant

structBIM ENGINEERS
WE DESIGN....WE BIM
46400 BENEDICT DR, SUITE #211
PHONE: 703-657-4481
E-MAIL: info@structBIM.com

Project

21 HIGH STREET, LOT 3
BROOKVILLE, MD 20833

I certify that these documents were prepared or approved by me, and that I am a duly licensed Professional Engineer under the laws of the State of Maryland, license number 40082, Expiration Date: 02-13-2023.

Issue Description	*Date*

structBIM Project No.	21-0245
Checked By	KK
Drawn By	KK
Scale	3/4" = 1'-0"

Sheet Title

FOUNDATION DETAILS

Sheet No.

SD0.1

COPYRIGHT, 2016 structBIMEngineers, LLC.
PLOTTED ON: 4/15/2022 12:50:02 PM

FILE NAME:

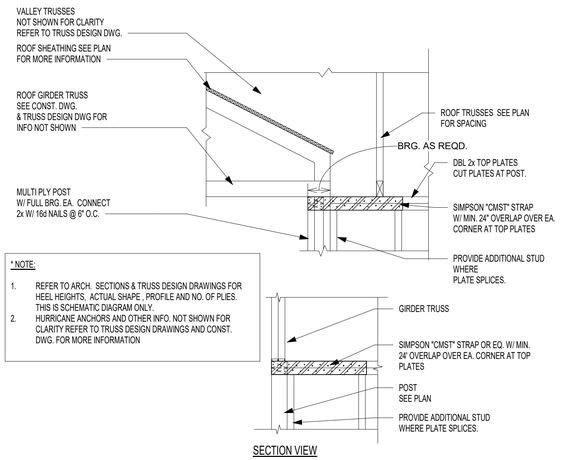

* NOTE:

1. REFER TO ARCH. SECTIONS & TRUSS DESIGN DRAWINGS FOR HEEL HEIGHTS, ACTUAL SHAPE , PROFILE AND NO. OF PLIES. THIS IS SCHEMATIC DIAGRAM ONLY.
2. HURRICANE ANCHORS AND OTHER INFO. NOT SHOWN FOR CLARITY REFER TO TRUSS DESIGN DRAWINGS AND CONST. DWG. FOR MORE INFORMATION

10 / SD1 G.T. W/ FULL BRG ON POST @ CORNER
SCALE: 3/4" = 1'-0"

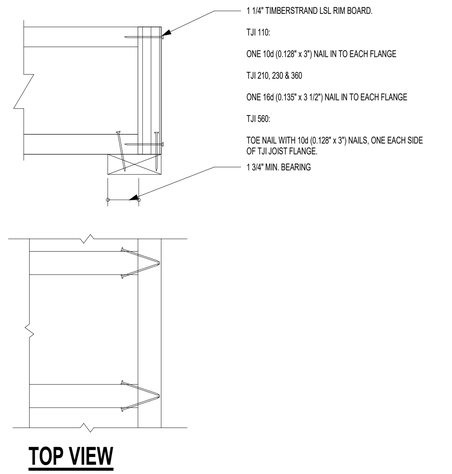

7 / SD1 RIM TO TJI JOIST CONNECTION
SCALE: 3/4" = 1'-0"

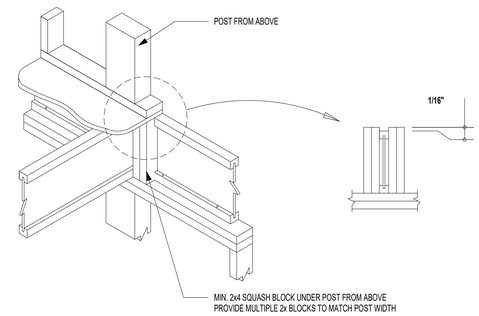

4 / SD1 JOISTS BRG @ EXT. WALL W/ POST ABOVE
SCALE: 3/4" = 1'-0"

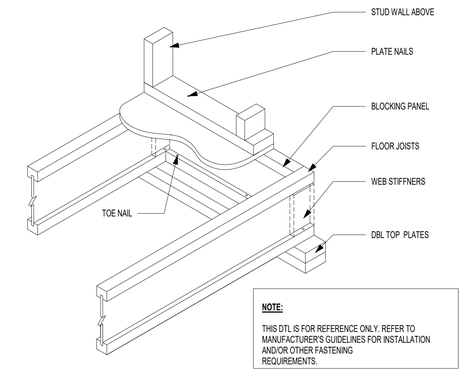

NOTE:

THIS DTL IS FOR REFERENCE ONLY. REFER TO MANUFACTURER'S GUIDELINES FOR INSTALLATION AND/OR OTHER FASTENING REQUIREMENTS.

1 / SD1 I JOIST WITH BRG WALL ABOVE
SCALE: 3/4" = 1'-0"

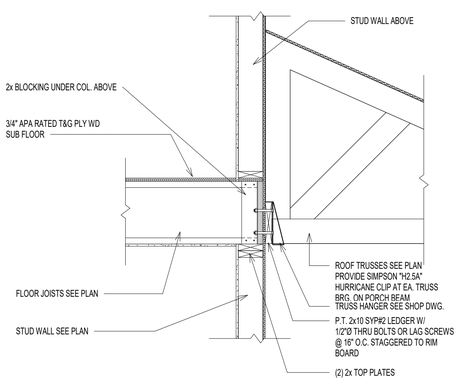

11 / SD1 SECTION @ PORCH
SCALE: 3/4" = 1'-0"

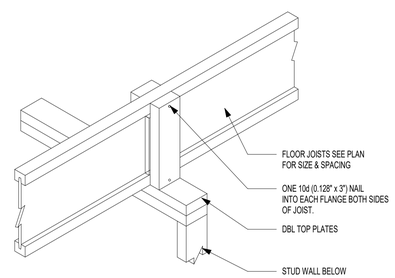

8 / SD1 TYP. SQUASH BLOCKS DETAIL
SCALE: 3/4" = 1'-0"

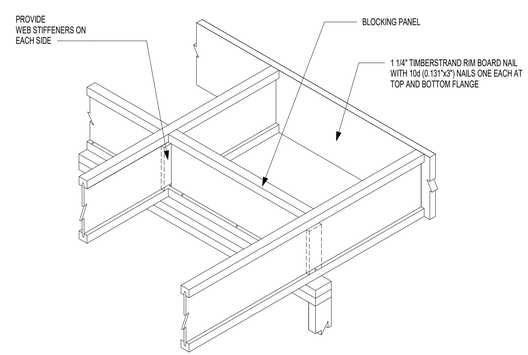

DO NOT CUT FLANGES OR WEB

5 / SD1 CANTILEVER JOIST DETAIL
SCALE: 3/4" = 1'-0"

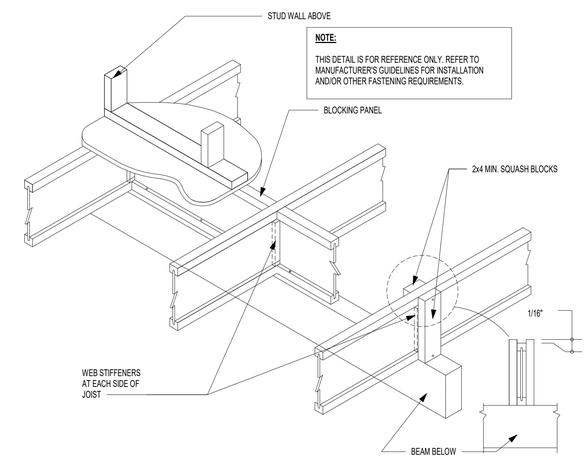

NOTE:

THIS DETAIL IS FOR REFERENCE ONLY. REFER TO MANUFACTURER'S GUIDELINES FOR INSTALLATION AND/OR OTHER FASTENING REQUIREMENTS.

2 / SD1 JOIST W/ INT. BRG. ON BEAM & BRG. WALL FROM ABOVE
SCALE: 3/4" = 1'-0"

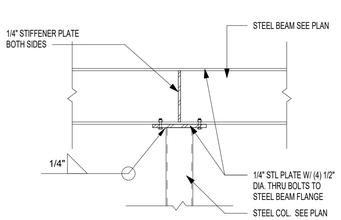

12 / SD1 STEEL BEAM TO STEEL COLUMN - INT. SUPPORT
SCALE: 3/4" = 1'-0"

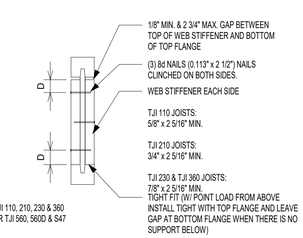

TJI JOIST SERIES	DEPTH	MINIMUM WEB STIFFENER SIZE	NAILING		
			TYPE	END	INTERMEDIATE
110	ALL	5/8" x 2 5/16"	8d (0.113" x 2 1/2")	3	3
210	ALL	3/4" x 2 5/16"			
230 & 360	ALL	7/8" x 2 5/16"			

9 / SD1 TYP. I JOIST WEB STIFFENER SCHEDULE
SCALE: 3/4" = 1'-0"

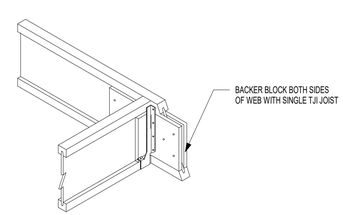

TJI	110		210		230 OR 360		560	
DEPTH	9 1/2" OR 11 7/8"	14"	9 1/2" OR 11 7/8"	14" OR 16"	9 1/2" OR 11 7/8"	14" OR 16"	11 7/8"	14" OR 16"
FILLER BLOCK (1)	2x6	2x8	2x6 + 3/8" SHEATHING	2x8 + 3/8" SHEATHING	2x6 + 1/2" SHEATHING	2x8 + 1/2" SHEATHING	(2) 2x6	(2) 2x8
BACKER BLOCK (1)	5/8" OR 3/4"		3/4" OR 7/8"		7/8" OR 1" NET		2x6	2x8

6 / SD1 SINGLE JOIST TO SINGLE JOIST CONNECTION
SCALE: 3/4" = 1'-0"

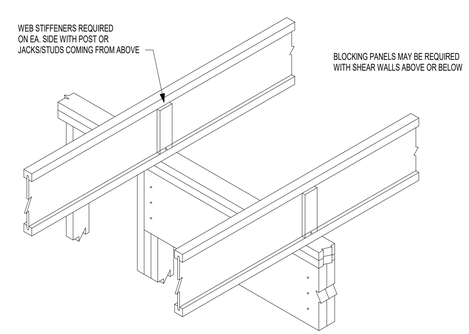

3 / SD1 INTERMEDIATE BEARING
SCALE: 3/4" = 1'-0"

© COPYRIGHT 2016
Structural Engineering content of this drawings are property of structBIM LLC and are issued for this project only. Any re-use or re-production of these drawings shall not be done without written consent of structBIM LLC. These drawings are to be read in conjuction with project specifications and drawings from other consultants. These drawings shall not be used as shop drawings. Do not scale drawings, use dimensions as specified.

GTM ARCHITECTS

7735 OLD GEORGETOWN ROAD
SUITE 700
BETHESDA, MD 20814
(240)333-2000
(240)333-2001 FAX
WWW.GTMARCHITECTS.COM

GTM

Seal

Consultant

structBIM ENGINEERS
WE DESIGN....WE BIM
46400 BENEDICT DR, SUITE #211
PHONE: 703-657-4481
E-MAIL: info@structBIM.com

Project

21 HIGH STREET, LOT 3
BROOKVILLE, MD 20833

I certify that these documents were prepared or approved by me, and that I am a duly licensed Professional Engineer under the laws of the State of Maryland, license number 40082, Expiration Date: 02-13-2023.

Issue Description	*Date*

structBIM Project No.	21-0245
Checked By	KK
Drawn By	KK
Scale	3/4" = 1'-0"

Sheet Title

FRAMING DETAILS

Sheet No.

SD1

COPYRIGHT, 2016 structBIMEngineers, LLC.
PLOTTED ON: 4/15/2022 12:50:04 PM

FILE NAME:

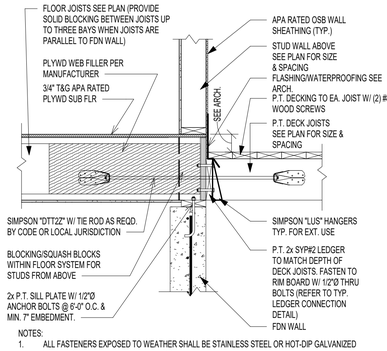

NOTES:
1. ALL FASTENERS EXPOSED TO WEATHER SHALL BE STAINLESS STEEL OR HOT-DIP GALVANIZED OR APPROVED BY MANUFACTURER FOR EXTERIOR USE.

DECK CONNECTORS TABLE (SIMPSON "DTT2Z OR EQ. APPROVED)				
DECK SIZE	6'-0" x 4'-0"	8'-0" x 4'-0"	12'-0" x 10'-0"	20'-0" x 10'-0"
NO. OF CONNECTORS	2	2	2	3

NOTES:
1. NO. OF CONNECTORS SHALL BE PROVIDED SUCH THAT ALL CONNECTORS ARE EQUALLY SPACED.
2. MIN. ONE CONNECTOR SHALL BE PROVIDED AT EACH END OF DECK.

12 / SD2 TYP. DECK CONNECTION DETAIL
SCALE: 3/4" = 1'-0"

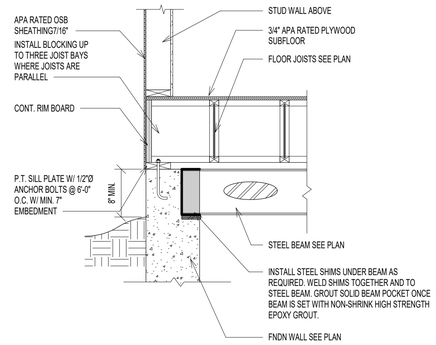

9 / SD2 TYP. STEEL BEAM POCKET DETAIL
SCALE: 3/4" = 1'-0"

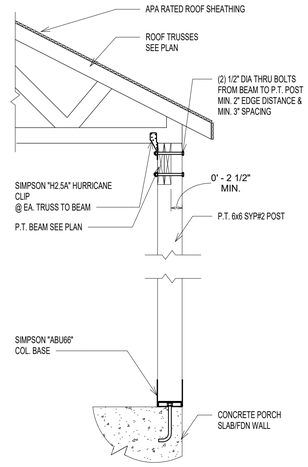

10 / SD2 SECTION AT PORCH ROOF
SCALE: 3/4" = 1'-0"

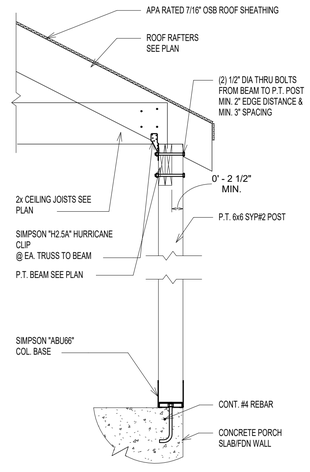

11 / SD2 SECTION AT PORCH ROOF
SCALE: 3/4" = 1'-0"

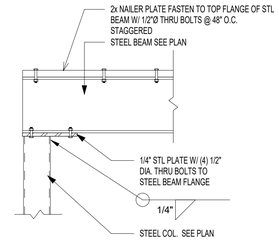

5 / SD2 STEEL BEAM TO STEEL COLUMN - END SUPPORT
SCALE: 3/4" = 1'-0"

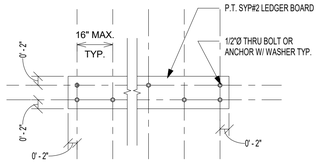

6 / SD2 TYP. DECK CONNECTION DETAIL
SCALE: 3/4" = 1'-0"

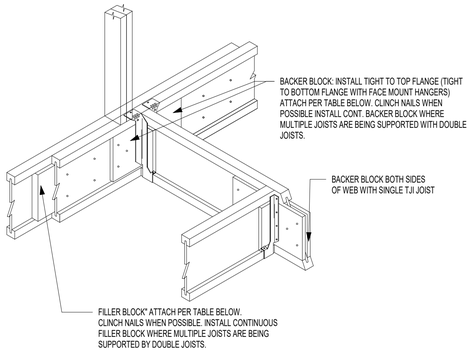

TJI	110		210		230 OR 360		560	
DEPTH	9 1/2" OR 11 7/8"	14"	9 1/2" OR 11 7/8"	14" OR 16"	9 1/2" OR 11 7/8"	14" OR 16"	11 7/8"	14" OR 16"
FILLER BLOCK (1)	2x6	2x8	2x6 + 3/8" SHEATHING	2x8 + 3/8" SHEATHING	2x6 + 1/2" SHEATHING	2x8 + 1/2" SHEATHING	(2) 2x6	(2) 2x8
BACKER BLOCK (1)	5/8" OR 3/4"		3/4" OR 7/8"		7/8" OR 1" NET		2x6	2x8

7 / SD2 TYPICAL DBL JOISTS CONNECTION W/ JOIST SUPPORTED
SCALE: 3/4" = 1'-0"

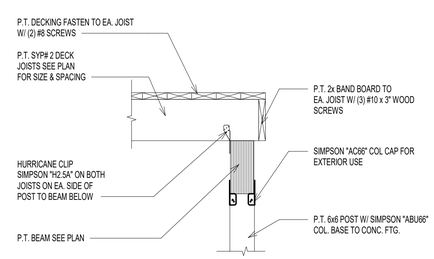

8 / SD2 TYP. DECK POST CONNECTION W/ POST FROM ABOVE
SCALE: 3/4" = 1'-0"

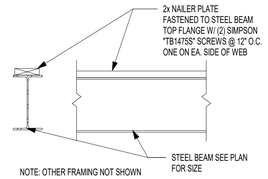

ALTERNATE FASTENERS:

NAILER PLATE MAY BE FASTENED TO TOP FLANGE W/ 1/2"Ø THRU BOLTS @ 48" O.C. STAGGERED

1 / SD2 TYP. STEEL BEAM NAILER PLATE CONNECTION
SCALE: 3/4" = 1'-0"

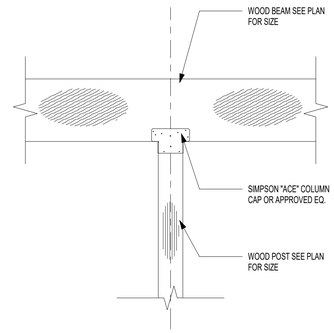

2 / SD2 INTERIOR POST W/ COL. CAP CONN.
SCALE: 3/4" = 1'-0"

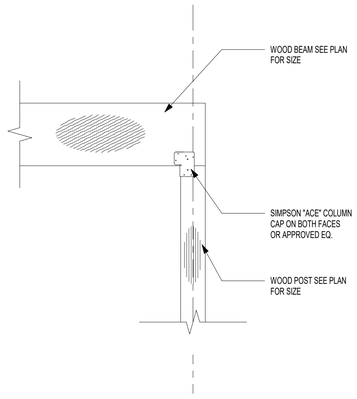

3 / SD2 END COL. TO BEAM BEARING CONNECTION
SCALE: 3/4" = 1'-0"

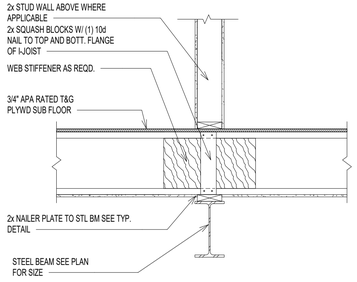

4 / SD2 TYP. JOIST BEARING ON STEEL BEAM
SCALE: 3/4" = 1'-0"

© COPYRIGHT 2016
Structural Engineering content of this drawings are property of structBIM LLC and are issued for this project only. Any re-use or re-production of these drawings shall not be done without written consent of structBIM LLC. These drawings are to be read in conjuction with project specifications and drawings from other consultants. These drawings shall not be used as shop drawings. Do not scale drawings, use dimensions as specified.

GTM ARCHITECTS

7735 OLD GEORGETOWN ROAD
SUITE 700
BETHESDA, MD 20814
(240)333-2000
(240)333-2001 FAX
WWW.GTMARCHITECTS.COM

GTM

Seal

STATE OF MARYLAND · KUSHAL KANDEL · 40082 · PROFESSIONAL ENGINEER

Consultant

structBIM ENGINEERS
WE DESIGN....WE BIM
46400 BENEDICT DR, SUITE #211
PHONE: 703-657-4481
E-MAIL: info@structBIM.com

Project

21 HIGH STREET, LOT 3
BROOKVILLE, MD 20833

I certify that these documents were prepared or approved by me, and that I am a duly licensed Professional Engineer under the laws of the State of Maryland, license number 40082, Expiration Date: 02-13-2023.

Issue Description	*Date*

structBIM Project No.	21-0245
Checked By	KK
Drawn By	KK
Scale	3/4" = 1'-0"

Sheet Title

FRAMING DETAILS

Sheet No.

SD2

COPYRIGHT, 2016 structBIMEngineers, LLC.
PLOTTED ON: 4/19/2022 12:56:07 PM

Point Load Connector Spacing
8- Screw Connection

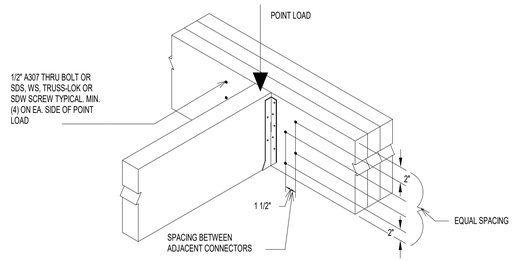

2 / SD3 LVL BEAM CONNECTION AT POINT LOAD
SCALE: 3/4" = 1'-0"

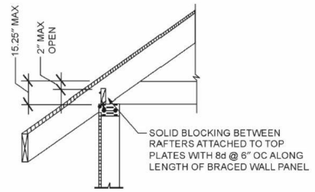

3 / SD3 TYPICAL ROOF BEARING @ BRACED WALL PANEL
SCALE: 3/4" = 1'-0"

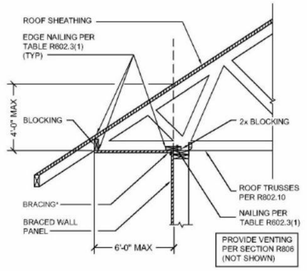

4 / SD3 TYPICAL ROOF BEARING @ BRACED WALL PANEL
SCALE: 3/4" = 1'-0"

ALLOWABLE HOLES

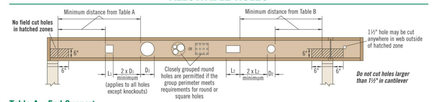

Table A—End Support

Minimum distance from edge of hole to inside face of nearest end support

Depth	TJI®	Round Hole Size 2"	3"	4"	5"	6½"	7"	8½"	11"	13"	Square or Rectangular Hole Size 2"	3"	4"	5"	6½"	7"	8½"	11"	13"
9½"	110	1'-0"	1'-0"	2'-0"	2'-0"	5'-0"					1'-0"	1'-0"	2'-0"	3'-0"	4'-0"				
	210	1'-0"	1'-0"	2'-0"	3'-0"	5'-0"					1'-0"	2'-0"	2'-0"	4'-0"	5'-0"				
	230	1'-0"	1'-0"	2'-0"	3'-0"	5'-0"					1'-0"	2'-0"	3'-0"	4'-0"	5'-0"				
11⅞"	110	1'-0"	1'-0"	1'-0"	1'-0"	2'-6"	2'-6"	5'-0"			1'-0"	1'-0"	1'-6"	2'-0"	4'-0"	4'-0"	5'-0"		
	210	1'-0"	1'-0"	1'-0"	1'-6"	2'-6"	3'-0"	5'-6"			1'-0"	1'-0"	2'-0"	3'-0"	5'-0"	5'-0"	6'-0"		
	230	1'-0"	1'-0"	1'-0"	2'-0"	3'-0"	3'-6"	6'-0"			1'-0"	1'-0"	2'-0"	3'-0"	5'-6"	5'-6"	7'-0"		
	360	1'-0"	1'-0"	1'-6"	2'-6"	4'-6"	5'-0"	7'-0"			1'-0"	1'-0"	2'-6"	4'-0"	6'-6"	6'-6"	7'-6"		
	560	1'-0"	1'-0"	1'-0"	1'-0"	3'-0"	3'-0"	8'-0"			1'-0"	2'-0"	3'-0"	5'-0"	7'-0"	7'-0"	8'-0"		
14"	110	1'-0"	1'-0"	1'-0"	1'-0"	1'-0"	1'-0"	2'-6"	5'-0"		1'-0"	1'-0"	1'-0"	1'-6"	3'-6"	4'-0"	6'-0"	8'-0"	
	210	1'-0"	1'-0"	1'-0"	1'-0"	1'-0"	1'-6"	3'-0"	6'-0"		1'-0"	1'-0"	1'-0"	2'-0"	4'-0"	4'-0"	6'-0"	8'-6"	
	230	1'-0"	1'-0"	1'-0"	1'-0"	1'-6"	2'-0"	3'-6"	6'-6"		1'-0"	1'-0"	1'-0"	2'-0"	4'-0"	5'-0"	7'-0"	9'-0"	
	360	1'-0"	1'-0"	1'-0"	1'-0"	2'-6"	3'-0"	6'-0"	9'-0"		1'-0"	1'-0"	1'-6"	3'-6"	6'-6"	7'-0"	9'-0"	9'-6"	
	560	1'-0"	1'-0"	1'-0"	1'-0"	2'-6"	3'-0"	6'-0"	9'-0"		1'-0"	1'-0"	1'-6"	3'-6"	6'-6"	7'-0"	9'-0"	10'-0"	
16"	110	1'-0"	1'-0"	1'-0"	1'-0"	1'-0"	1'-0"	1'-6"	3'-6"	6'-0"	1'-0"	1'-0"	1'-0"	1'-0"	2'-6"	3'-6"	6'-0"	8'-0"	10'-6"
	210	1'-0"	1'-0"	1'-0"	1'-0"	1'-0"	2'-0"	4'-0"	6'-6"	10'-0"	1'-0"	1'-0"	1'-0"	1'-0"	3'-0"	3'-0"	7'-0"	9'-0"	11'-0"
	230	1'-0"	1'-0"	1'-0"	1'-0"	1'-0"	2'-0"	4'-0"	7'-0"	10'-6"	1'-0"	1'-0"	1'-0"	1'-0"	3'-0"	4'-0"	7'-0"	9'-0"	11'-6"
	360	1'-0"	1'-0"	1'-0"	1'-0"	1'-0"	2'-0"	4'-0"	8'-0"	12'-0"	1'-0"	1'-0"	1'-0"	1'-0"	4'-0"	5'-0"	9'-0"	10'-0"	11'-6"
	560	1'-0"	1'-0"	1'-0"	1'-0"	1'-0"	1'-0"	3'-0"	8'-0"	10'-6"	1'-0"	1'-0"	1'-0"	1'-0"	5'-0"	6'-0"	10'-0"	11'-0"	12'-0"

Table B—Intermediate or Cantilever Support

Minimum distance from edge of hole to inside face of nearest intermediate or cantilever support

Depth	TJI®	Round Hole Size 2"	3"	4"	5"	6½"	7"	8½"	11"	13"	Square or Rectangular Hole Size 2"	3"	4"	5"	6½"	7"	8½"	11"	13"
9½"	110	1'-6"	2'-6"	3'-0"	4'-0"	7'-6"					1'-6"	2'-6"	3'-6"	5'-6"	6'-6"				
	210	2'-0"	2'-6"	3'-6"	4'-6"	7'-6"					2'-0"	3'-0"	4'-0"	6'-0"	7'-0"				
	230	2'-6"	3'-0"	4'-0"	5'-0"	8'-0"					2'-6"	3'-0"	4'-6"	6'-0"	7'-6"				
11⅞"	110	1'-6"	1'-6"	2'-6"	3'-6"	6'-0"	6'-0"	8'-6"			1'-6"	1'-6"	2'-6"	4'-0"	6'-0"	7'-0"	9'-0"		
	210	1'-6"	2'-0"	2'-0"	3'-0"	4'-6"	5'-0"	9'-0"			1'-6"	2'-0"	3'-0"	4'-0"	7'-0"	8'-0"	10'-0"		
	230	1'-6"	2'-0"	2'-6"	3'-0"	5'-0"	5'-0"	9'-6"			1'-6"	2'-0"	3'-0"	5'-0"	8'-0"	8'-6"	10'-0"		
	360	2'-0"	2'-0"	3'-0"	4'-0"	7'-0"	7'-0"	11'-0"			2'-0"	3'-0"	3'-0"	7'-0"	9'-6"	9'-6"	11'-0"		
	560	1'-6"	3'-0"	4'-6"	5'-6"	8'-0"	8'-6"	12'-0"			3'-0"	4'-6"	6'-0"	8'-0"	10'-6"	11'-0"	12'-0"		
14"	110	1'-0"	1'-0"	1'-0"	1'-0"	2'-0"	2'-0"	4'-0"	8'-0"		1'-0"	1'-0"	1'-0"	2'-0"	5'-0"	6'-0"	9'-0"	12'-0"	
	210	1'-0"	1'-0"	1'-0"	1'-0"	2'-6"	3'-0"	5'-0"	9'-0"		1'-0"	1'-0"	2'-0"	3'-0"	6'-0"	7'-0"	10'-0"	12'-6"	
	230	1'-0"	1'-0"	1'-0"	1'-0"	3'-0"	3'-0"	5'-6"	10'-0"		1'-0"	1'-0"	2'-0"	4'-0"	6'-0"	7'-6"	10'-6"	13'-0"	
	360	1'-0"	1'-0"	2'-0"	3'-0"	5'-0"	5'-0"	8'-6"	12'-0"		1'-0"	2'-0"	4'-0"	5'-0"	9'-0"	10'-0"	12'-0"	14'-0"	
	560	1'-0"	1'-0"	1'-0"	1'-6"	3'-6"	4'-0"	6'-6"	11'-0"		1'-0"	1'-0"	2'-0"	4'-0"	7'-0"	8'-0"	11'-0"	13'-0"	15'-0"
16"	110	1'-0"	1'-0"	1'-0"	1'-0"	1'-0"	1'-0"	3'-0"	5'-6"	9'-6"	1'-0"	1'-0"	1'-0"	2'-0"	4'-0"	5'-0"	8'-6"	13'-0"	15'-6"
	210	1'-0"	1'-0"	1'-0"	1'-0"	1'-6"	2'-0"	4'-0"	8'-6"	10'-6"	1'-0"	1'-0"	1'-0"	2'-0"	5'-0"	6'-0"	10'-6"	13'-0"	16'-0"
	230	1'-0"	1'-0"	1'-0"	1'-0"	2'-0"	2'-6"	4'-6"	9'-0"	11'-6"	1'-0"	1'-0"	2'-0"	4'-0"	7'-6"	8'-6"	10'-6"	14'-0"	17'-0"
	360	1'-0"	1'-0"	1'-0"	1'-0"	4'-0"	4'-0"	6'-6"	10'-6"	13'-6"	1'-0"	2'-0"	2'-0"	4'-0"	7'-6"	8'-6"	11'-0"	14'-6"	17'-0"
	560	1'-0"	1'-0"	1'-0"	1'-0"	2'-6"	3'-6"	7'-0"	11'-0"	15'-0"	1'-0"	1'-0"	3'-6"	5'-6"	9'-0"	10'-0"	14'-6"	16'-0"	18'-0"

- Rectangular holes based on measurement of largest side.

How to Use These Tables

1. Using **Table A, Table B,** or both if required, determine the hole shape/size and select the TJI® joist and depth.
2. Scan horizontally until you intersect the correct hole size column.
3. Measurement shown is minimum distance from edge of hole to support.
4. Maintain the required minimum distance from the end **and** the intermediate or cantilever support.

General Notes

- Holes may be located vertically anywhere within the web. Leave ⅛" of web (minimum) at top and bottom of hole.
- Knockouts are located in web at approximately 12" on-center; they do not affect hole placement.
- For simple span (5' minimum) uniformly loaded joists meeting the requirements of this guide, one maximum size round hole may be located at the center of the joist span **provided that no other holes occur in the joist.**
- Distances are based on the maximum uniform loads shown in this guide. For other load conditions or hole configurations, use Forte™ software or contact your iLevel representative.

1 / SD3 TYPICAL ALLOWABLE HOLE SIZES FOR I JOISTS
SCALE: 3/4" = 1'-0"

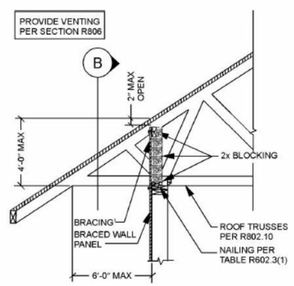

A SECTION

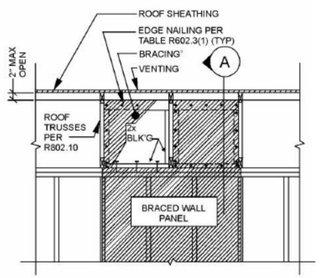

B ELEVATION

5 / SD3 TYPICAL ROOF BEARING @ BRACED WALL PANEL
SCALE: 3/4" = 1'-0"

ASSEMBLY	A	B	C	D	E	F
SKETCH	2'-0 2'-0 0' - 1 3/4"	2'-0 2'-0 0' - 1 3/4"	2'-0 2'-0 0' - 1 3/4" 0' - 3 1/2"	2'-0 2'-0 0' - 1 3/4"	2'-0 2'-0 0' - 1 3/4" 0' - 1 3/4" 0' - 3 1/2"	2'-0 2'-0 0' - 3 1/2"
FASTNER	SIMPSON - SDW22 x 3 5/8"	SIMPSON - SDW22 x 5"	SIMPSON - SDW22 x 5"	SIMPSON - SDW22 x 6 3/4"	SIMPSON - SDW22 x 6 3/4"	SIMPSON - SDW22 x 6 3/4"
SPACING	12" O.C.	12" O.C.	12" O.C.	12" O.C.	12" O.C.	12" O.C.
NOTE		INSTALL FASTNERS FROM BOTH SIDES STAGGER BY 3" FASTENERS FROM OPPOSITE SIDES		INSTALL FASTNERS FROM BOTH SIDES STAGGER BY 3" FASTENERS FROM OPPOSITE SIDES	INSTALL FASTNERS FROM BOTH SIDES STAGGER BY 3" FASTENERS FROM OPPOSITE SIDES	INSTALL FASTNERS FROM BOTH SIDES STAGGER BY 3" FASTENERS FROM OPPOSITE SIDES

NOTES:

1. CONTACT ENGINEER FOR ALTERNATE FASTENERS IF NEEDED.
2. NOTIFY ENGINEER IF POINT LOAD IS APPLIED ON LVL BEAMS. INSTALL MIN. 8 FASTENERS ON EITHER SIDE OF POINT LOAD WITH 2" SPACING.
3. MAINTAIN MINIMUM EDGE DISTANCE OF 6" FROM ENDS.

2A / SD3 TYP. LVL PLY CONNECTION DETAIL
SCALE: 3/4" = 1'-0"

© COPYRIGHT 2016
Structural Engineering content of this drawings are property of structBIM LLC and are issued for this project only. Any re-use or re-production of these drawings shall not be done without written consent of structBIM LLC. These drawings are to be read in conjuction with project specifications and drawings from other consultants. These drawings shall not be used as shop drawings. Do not scale drawings, use dimensions as specified.

GTM ARCHITECTS

7735 OLD GEORGETOWN ROAD
SUITE 700
BETHESDA, MD 20814
(240)333-2000
(240)333-2001 FAX
WWW.GTMARCHITECTS.COM

Seal

Consultant

structBIM ENGINEERS
WE DESIGN....WE BIM
46400 BENEDICT DR, SUITE #211
PHONE: 703-657-4481
E-MAIL: info@structBIM.com

Project

21 HIGH STREET, LOT 3
BROOKVILLE, MD 20833

I certify that these documents were prepared or approved by me, and that I am a duly licensed Professional Engineer under the laws of the State of Maryland, license number 40082, Expiration Date: 02-13-2023.

Issue Description	*Date*

structBIM Project No.	21-0245
Checked By	KK
Drawn By	KK
Scale	3/4" = 1'-0"

Sheet Title

FRAMING DETAILS

Sheet No.

SD3

COPYRIGHT, 2016 structBIMEngineers, LLC.

PLOTTED ON: 4/13/2022 12:35:09 PM

FILE NAME:

STANDARDS AND CODES:

- DESIGN BUILDING CODE: INTERNATIONAL RESIDENTIAL CODE 2018 EDITION, STATE OR LOCAL JURISDICTION AMENDMENTS AND/OR ORDINANCES.
- IN ADDITION TO THE REQUIREMENTS INCLUDED IN THESE PROJECT, ALL CONSTRUCTION AND MATERIAL SHALL FURTHER CONFORM TO THE APPLICABLE PROVISIONS FROM LATEST EDITION OF FOLLOWING STANDARDS/CODES AS REQUIRED BY GOVERNING CODE OR LOCAL JURISDICTION.
- ACI (AMERICAN CONCRETE INSTITUTE)-318: BUILDING CODE REQUIREMENTS FOR STRUCTURAL CONCRETE..
- ACI-332: CODE REQUIREMENTS FOR RESIDENTIAL CONCRETE CONSTRUCTION
- ACI-530: BUILDING CODE REQUIREMENTS FOR MASONRY STRUCTURES
- AISC (AMERICAN INSTITUTE OF STEEL CONSTRUCTION): STEEL CONSTRUCTION MANUAL.
- NDS: NATIONAL DESIGN SPECIFICATIONS (NOS) FOR WOOD CONSTRUCTOIN WITH SUPPLEMENT.
- WFCM: WOOD FRAME CONSTRUCTION MANUAL FOR ONE- AND TWO- FAMILY DWELLINGS.
- AFPA: AMERICAN FOREST AND PAPER ASSOCIATOIN - SPAN TABLE FOR JOISTS AND RAFTERS.
- AISI S100: NORTH AMERICAN SPECIFICATION FOR THE DESIGN OF COLD FORMED STEEL STRUCTURAL MEMBERS.
- AISI S230: STANDARD FOR COLD-FORMED STEEL FRAMING-PRESCRIPTIVE METHOD FOR ONE- AND TWO-FAMILY DWELLINGS.
- AMERICAN INSTITUTE OF TIMBER CONSTRUCTION (AITC).
- AMERICAN NATIONAL STANDARDS INSTITUTE (ANSI).
- APA (AMERICAN PLYWOOD ASSOCIATION) E30: ENGINEERED WOOD CONSTRUCTION GUIDE
- ASCE - 5 (AMERICAN SOCIETY OF CIVIL ENGINEERS): BUILDING CODE REQUIREMENTS FOR MASONRY STRUCTURES.
- ASCE-6: SPECIFICATIONS FOR MASONRY STRUCTURES.
- ASCE-7: MINIMUM DESIGN LOADS FOR BUILDING AND OTHER STRUCTURES.
- AMERICAN WOOD COUNCIL (AWC).
- AMERICAN SOCIETY FOR TESTING AND MATERIALS (ASTM).
- AMERICAN WOOD PROTECTION ASSOCIATION (AWPA).
- AMERICAN WELDING SOCIETY (AWS).
- FEDERAL EMERGENCY MANAGEMENT AGENCY (FEMA).
- GYPSUM ASSOCIATION (GA).
- NATIONAL CONCRETE MASONRY ASSOCIATION (NCMA).
- SSPC: STEEL STRUCTURES PAINTING COUNCIL.
- TPI-I: NATOINAL DESIGN STANDARDS FOR METAL-PLATE-CONNECTED WOOD TRUSS CONSTRUCTION.

DESIGN LOADS:

DESCRIPTION	DEAD LOAD	LIVE LOAD	SNOW LOAD (b)
ROOF	17 PSF	-	30 PSF
FLOOR	15 PSF	40 PSF	-
ATTIC W/OUT STORAGE	10 PSF	10 PSF	-
ATTIC W/ LIMITED STORAGE	10 PSF	20 PSF	-
HABITABLE ATTICS & ATTICS W/ FIXED STAIR	10 PSF	30 PSF	-
SLEEPING ROOMS	10 PSF	30 PSF	-
BALCONIES & DECKS	10 PSF	40 PSF	-
STAIRS	10 PSF	40 PSF	-
GUARD RAILS & HAND RAILS	-	200 LBS (c)	-

WIND LOAD:

- WIND SPEED (ULTIMATE): 115 MPH
- WIND PRESSURE: 18 PSF (f)
- WIND EXPOSURE CATEGORY: B

FOUNDATION DESIGN LOADS:

- SOIL BEARING CAPACITY (g): 2000 PSF
- LATERAL EARTH PRESSURE: 60 PSF/FT

EARTHQUAKE LOADS:

- SEISMIC DESIGN CATEGORY: B
- SITE CLASS: B

NOTES:

a. REFER TO IRC TABLE R301.5 FOR MORE INFORMATION.
b. SNOW LOAD SPECIFIED IS GROUND SNOW LOAD ONLY.
c. A SINGLE CONCENTRATED LOAD APPLIED IN ANY DIRECTION AT ANY POINT ALONG THE TOP.
d. MECHANICAL EQUIPMENT LOADS IN EXCESS OF 200 LBS SHALL BE NOTIFIED TO STRUCTURAL ENGINEER.
e. PRE-FABRICATED STRUCTURAL COMPONENT SHALL COMPLY WITH DESIGN LOADS FROM APPLICABLE CODES/STANDARDS IN ADDITION TO LOADS SPECIFIED IN THESE NOTES.
f. WIND PRESSURE SPECIFIED IS FOR MAIN WIND FORCE RESISTING SYSTEM ONLY. WIND PRESSURE & LOADS FOR STRUCTURAL COMPONENTS AND CLADDING SHALL BE DETERMINED BY RESPECTIVE REGISTERED DESIGN PROFESSIONAL PER APPLICABLE STANDARDS/CODES.
g. SOIL BEARING CAPACITY IS ASSUMED UNLESS GEOTECHNICAL REPORT IS PROVIDED PER SITE WORK SECTION.

DEFLECTION CRITERIA:

DESCRIPTION	TOTAL LOAD	LIVE LOAD
ROOF TRUSSES/RAFTERS/CEILING JOISTS	L/240	L/360 OR 1/2" MAX.
FLOOR JOISTS/FLOOR TRUSSES	L/240	L/480 OR 1/2" MAX.
MEMBERS SUPPORTING BRICK/ HORIZONTAL MASONRY MEMBERS	L/600 OR 0.3" MAX.	
JOISTS/TRUSSES SUPPORTING CERAMIC TILE	L/720	

SITE WORK:

- GEOTECHNICAL REPORT WAS NOT PROVIDED AND FOUNDATION DESIGN IS BASED ON ASSUMED SOIL DESIGN CRITERIA AND SHALL BE FIELD VERIFIED.
- BOTTOM OF ALL EXTERIOR FOOTING SHALL BE MINIMUM FROST DEPTH OF 30 INCHES BELOW GRADE OR AS REQUIRED BY GOVERNING AUTHORITY OR CODE, AND SHALL PROJECT 12" IN TO UNDISTURBED VIRGIN SOIL OR ENGINEERED FILL.
- SOIL BEARING CAPACITY SHALL BE VERIFIED ON-SITE BY GEOTECHNICAL ENGINEER.
- ALL BEARING STRATA SHALL BE ADEQUATELY DRAINED PRIOR TO PLACING FOUNDATION CONCRETE.
- THE SIDES OF FOOTINGS MAY BE EARTH-FORMED IF THE EXCAVATION CAN BE KEPT VERTICAL CLEAN AND STABLE. OTHERWISE FORMS MUST BE USED.
- UNBRACED EXCAVATIONS SHALL BE SLOPED NO GRATER THAN 2:1.
- NO EXCAVATION SHALL BE CLOSER THAN ATLEAST A SLOPE OF 2:1 TO THE UNDERSIDE OF ANY EXISTING OR NEW FOOTING WITHOUT THE WRITTEN AND CERTIFIED PERMISSION FROM GEOTECHNICAL ENGINEER.
- STEP FOOTINGS SHALL BE PROVIDED WITH A RATIO OF 2:1.
- FOUNDATION ELEMENTS THAT ARE TO SUPPORT FILL ON BOTH SIDES SHALL BE BACKFILLED SIMULTANEOUSLY AND UNIFORMLY ON BOTH SIDES.
- FOUNDATION ELEMENTS THAT ARE TO SUPPORT FILL ON ONE SIDE ONLY SHALL BE PROPERLY BRACED BY PERMANENT STRUCTURAL ELEMENTS PRIOR TO BACKFILLING. PROVIDE TEMPORARY BRACING AS REQUIRED UNTIL PERMANENT BRACING IN PLACE AND FOUNDATION WALL ACHIEVES DESIRED STRENGTH.
- ENGINEERED FILLS HALL BE PLACED IN 8" MAXIMUM HEIGHT LOOSE LIFTS AND COMPACTED TO 95% OF MAXIMUM DRY DENSITY AT OPTIMUM MOISTURE CONTENT AS ESTABLISHED BY ASTM D-698.
- NO PORTION OF THE STRUCTURAL DRAWINGS SHALL BE USED AS SHOP DRAWINGS. CONTRACTOR IS RESPONSIBLE FOR FURNISHING SHOP DRAWINGS AND SHALL SUBMIT TO ENGINEER OF RECORD FOR REVIEW.
- PROVIDE SHORING AND PROTECTION FOR EXCAVATION BANKS AS NECESSARY TO AVOID CAVING
- PROVIDE 6 MIL POLYETHYLENE VAPOR VARIOUS UNDER SLAB ON GRADE OR AS RECOMMENDED BY GEOTECHNICAL ENGINEER.
- ALL RECOMMENDATIONS SPECIFIED IN GEOTECHNICAL REPORT SHALL BE FOLLOWED ALL THE TIME AND SHALL GOVERN.

GENERAL

- STRUCTURAL ENGINEERING DRAWINGS PREPARED IN THIS SET ARE BASED ON ARCHITECTURAL DRAWINGS AND PROVIDED INFORMATION AND SHALL BE READ IN CONJUNCTION WITH ARCHITECTURAL DRAWINGS.
- DETAILS, SECTIONS AND NOTES SHOWN ON THESE DRAWINGS ARE INTENDED TO BE TYPICAL AND SHALL BE APPLY TO SIMILAR CONDITIONS ELSEWHERE OTHERWISE SHOWN OR NOTED.
- THE STRUCTURAL INTEGRITY OF THE BUILDING IS DEPENDENT UPON COMPLETION OF WORK ACCORDING TO CONTRACT DRAWINGS AND SPECIFICATIONS. THE STRUCTURAL ENGINEER ASSUMES NO LIABILITY FOR THE STRUCTURE DURING CONSTRUCTION. THE METHODS OF CONSTRUCTION AND SEQUENCE OF OPERATIONS IS THE SOLE RESPONSIBILITY OF OWNER/CONTRACTOR.
- TEMPORARY BRACING AND SHORING SHALL BE RESPONSIBILITY OF CONTRACTOR AND SHALL BE DESIGNED BY SPECIALITY ENGINEER PER APPLICABLE CODES/STANDARDS TO ENSURE VERTICAL AND LATERAL STABILITY OF THE STRUCTURE OR PORTION THEREOF DURING THE CONSTRUCTION.
- THE CONTRACTOR SHALL BE RESPONSIBLE FOR PROVIDING NECESSARY UNDERPINNING OR BRACING FOR EXISTING STRUCTURE OR PORTION THEREOF. STRUCTURAL ENGINEER IS NOT RESPONSIBLE FOR ANY DESIGN OR PROVISIONS OF ANY TEMPORARY STRUCTURES.
- DO NOT CHANGE SIZE OR DIMENSIONS OF STRUCTURAL ELEMENTS WITHOUT WRITTEN PERMISSION FROM STRUCTURAL ENGINEER.
- DO NOT SCALE THE DRAWINGS, USE DIMENSIONS SHOWN. COORDINATE AND VERIFY ALL DIMENSIONS WITH ARCHITECTURAL DRAWINGS. ARCHITECTURAL DRAWINGS SUPERCEDES ALL DIMENSIONS SHOWN IN THESE DRAWINGS.
- GENERAL CONTRACTOR IS RESPONSIBLE TO PERFORM ALL NECESSARY TESTINGS PER GOVERNING ASTM STANDARDS FOR SOIL, CONCRETE OR ANY OTHER MATERIALS INVOLVED IN THE PROJECT AND SHOP DRAWINGS OF SUCH DESIGN OR REPORTS OF TESTING SHALL BE SUBMITTED TO ARCHITECT/ENGINEER FOR RECORD AND APPROVAL. ALL SUCH DESIGN OR TEST RESULTS SHALL BE SIGNED AND SEALED BY LICENSED PROFESSIONAL IN STATE OR JURISDICTION WHERE THE PROJECT IS LOCATED.

CAST-IN-PLACE CONCRETE:

- CONCRETE DESIGN AND DETAILING SHALL CONFORM TO THE REQUIREMENTS OF ACI 318 AND ACI 301, LATEST EDITIONS. CONTRACTOR SHALL SUBMIT MIX DESIGNS ACCOMPANIED BY APPROPRIATE GRAPHS AND BACKGROUND DATA FOR APPROVAL. MIX DESIGN SHALL INDICATE 7 AND 28 DAYS STRENGTHS, CEMENT CONTENT, AIR CONTENT, WATER-CEMENT RATIO, AMOUNT OF FINE AND COARSE AGGREGATES, AND ADMIXTURES.
- ALL REINFORCING STEEL SHALL BE DEFORMED BILLET STEEL CONFORMING TO ASTM A615 GRADE 60 AND DETAILED, FABRICATED AND PLACED CONFORMING TO MANUAL OF STANDARD PRACTICE FOR DETAILING CONCRETE STRUCTURES (ACI 315)
- ALL WELDED WIRE FABRIC SHALL CONFORM TO ASTM A185. ALL MESH EDGES SHALL LAP A MIN. OF 2 SQUARES.
- CONCRETE COMPRESSIVE STRENGTHS AT 28 DAYS SHALL BE 3000 psi FOR FOOTINGS, FOUNDATION WALLS AND SLAB ON GRADE IN ENCLOSED SPACES & 3500 psi FOR HORIZONTAL SURFACES EXPOSED TO WEATHER.
- SLUMP AT THE POINT OF DISCHARGE IN TO THE FORMS SHALL BE 4" +/- 1" FOR VERTICAL ELEMENTS AND 6" +/- 1" FOR HORIZONTAL ELEMENTS.
- CAST-IN-PLACE CONCRETE SHALL BE READY-MIX PER ASTM C94.
- ALL CONCRETE EXPOSED TO WEATHER SHALL HAVE A MIN. AIR ENTRAINMENT OF 6% +/- 1% PER ACI 318-08; SECTION: 4.4.1.
- PROVIDE CORNER BARS AT ALL WALL AND FOOTING INTERSECTIONS AND MATCH CONTINUING REINFORCEMENT.
- SEE ARCHITECTURAL DRAWINGS FOR NECESSARY CONCRETE FINISHES.
- RESTRICT ADDITION OF MIX WATER AT THE JOB SITE. DO NOT ADD WATER WITHOUT APPROVAL OF THE INSPECTIONS ENGINEER AND DO NOT EXCEED SLUMP LIMITATIONS.
- ALL GROUTS SHALL BE PRE-MIXED NON-SHRINKABLE, NON-METALLIC FORMULA PRO CONFORMING TO ASTMC827, AND SHALL HAVE A SPECIFIED COMPRESSIVE STRENGTH OF 3000 psi WITHIN 24 HOURS AND 6000 psi AT 28 DAYS. PRE-GROUTING OF BASE PLATES WILL NOT BE PERMITTED.
- PROVIDE KEYED JOINTS BETWEEN ALL NON-MONOLITHIC INTERSECTING CONCRETE ELEMENTS AND JOINTS.
- CONTRACTOR SHALL VERIFY EMBEDDED ITEMS, INCLUDING BUT NOT LIMITED TO ANCHOR BOLTS, BOLT CLUSTERS, WELD PLATES etc. BEFORE PLACING CONCRETE. NOTIFY ENGINEER OF ANY CONFLICTS WITH REBAR.
- CONCRETE EXPOSED TO WEATHER SHALL BE AIR ENTRAINED. TOTAL AIR CONTENT (BY PERCENT OF CONCRETE VOLUME) SHALL BE NOT LESS THAN 5% OR MORE THAN 7%.
- GENERAL CONTRACTOR IS RESPONSIBLE FOR SUBMITTING SHOP DRAWINGS SIGNED AND SEALED BY REGISTERED DESIGN PROFESSIONAL THAT INCLUDES: 1. CONCRETE MIX DESIGN 2. DETAILED REINFORCEMENT SHOP DRAWINGS PER ACI 318 AND ACI DETAILING MANUAL. 3. FORM WORK, SHORING, RE-SHORING OR UNDERPINNING SHOP DRAWINGS AS REQUIRED FOR PROJECT.

REINFORCING STEEL:

- REINFORCING BARS SHALL BE DEFORMED BILLET STEEL CONFORMING TO ASTM A615. REINFORCING BARS SHALL BE GRADE 60, UNLESS NOTED OTHERWISE.
- PLAIN BARS FOR SPIRAL REINFORCEMENT SHALL CONFORM TO ASTM A 615, GRADE 60.
- PLAIN STEEL WELDED WIRE REINFORCEMENT SHALL CONFORM TO ASTM A185.
- WELDED DEFORMED STEEL BAR MATS FOR CONCRETE REINFORCEMENT SHALL CONFORM TO ASTM A184.
- BARS SHALL BE BRANDED BY THE MANUFACTURER WITH BAR SIZE AND GRADE OF STEEL AND CERTIFIED MILL REPORTS SHALL BE SUBMITTED FOR RECORD.
- REINFORCING STEEL SHALL BE DETAILED IN ACCORDANCE WITH THE ACI "MANUAL OF STANDARD PRACTICE FOR DETAILING REINFORCED CONCRETE STRUCTURES", LATEST EDITION.
- PROVIDE MINIMUM CLEAR CONCRETE COVER (a) FOR REINFORCEMENT AS SPECIFIED BELOW UNLESS SPECIFICALLY NOTED OTHERWISE ON THE PLANS:

DESCRIPTION			MIN. COVER (IN.)
CONCRETE CAST AGAINST AND PERMENANTLY EXPOSED TO EARTH			3"
CONCRETE EXPOSED TO EARTH OR WEATHER	#6 THROUGH #18 BARS		2"
	#5 BAR, W31 OR D31 WIRE AND SMALLER		1 1/2"
CONCRETE NOT EXPOSED TO EARTH OR WEATHER	SLAB, WALLS, JOISTS		3/4"
	BEAMS, COLUMNS (PRIMARY REINF., TIES, STIRRUPS, SPIRALS.		1 1/2"
	SHELLS, FOLDED PLATES	#6 BARS AND LARGER	3/4"
		#5 BAR, W31 OR D31 WIRE, AND SMALLER	1/2"

MASONRY:

- CONCRETE BLOCKS USED IN WALLS SHALL CONFORM TO ASTM C90. BRICK SHALL CONFORM TO ASTM C62 AND ASTM C216, AS APPLICABLE. MORTAR FOR BRICK VENEER AND OTHER MASONRY SHALL CONFORM TO ASTM C270, TYPE N. TYPE S MORTAR SHALL BE USED TYPICALL FOR ALL MASONRY, AND TYPE M MORTAR SHALL BE USED FOR BELOW GRADE MASONRY AND/OR MASONRY IN CONTACT WITH SOIL, U.N.O.
- HOLLOW LOAD BEARING UNITS SHALL CONFORM TO ASTM C90, NORMAL WEIGHT TYPE II WITH A MIN. NET COMPRESSIVE UNIT STRENGTH OF 1900 psi. (NET AREA COMPRESSIVE MASONRY STRENGTH fm' = 1500 psi)
- REINFORCED MASONRY WALLS SHALL BE BUILT SUCH THAT CELLS LINE UP VERTICALLY.
- FILLED CELLS SHALL BE FILLED WITH COARSE GROUT. COARSE GROUT SHALL CONFORM TO ASTM C476. PROPERTIES SHALL INCLUDE: 2500 psi AT 28 DAYS, 3/8" MAXIMUM AGGREGATE AND 8"-11" SLUMP. FILLED CELLS MAY ALTERNATIVELY BE FILLED WITH A 3000 psi PEA GRAVEL MIX CONCRETE. TEH PEA GRAVEL MIX SHALL BE PROPORTIONED WITH A MAXIMUM AGGREGATE SIZE OF 3/8" DIAMETER TO PROVIDE A MIN. OF 1/2" CLEARANCE, ADDITIONALLY, THE PEA GRAVEL MIX SHALL PROVIDE AN 8" TO 11" SLUMP.
- A CONTINUOUS REINFORCED CMU/CONCRETE BOND BEAM SHALL BE PROVIDED ON TOP OF EACH WALL. BOND BEAMS SHALL BE MIN. 8"x8" WITH CONTINUOUS (2) #4 REBARS.
- WHERE EXPANSION OR ANY OTHER ANCHORS ARE SHOWN, MASONRY CELLS SHALL BE FULLY GROUTED AT MINIMUM OF 8" ABOVE AND BELOW EACH EXPANSION ANCHOR OR ANY OTHER ANCHORS UNLESS NOTED OTHERWISE.
- UNLESS NOTED OTHERWISE ON PLANS, PROVIDE A MIN. OF (2) FULLY GROUTED COURSES BY 32" LENGTH AT ALL STRUCTURAL STEEL BEARING.
- VERTICAL REINFORCING BARS SHALL BE HELD IN POSITION WITH BAR POSITIONERS @ 8'-0" O.C., AT TOP AND BOTTOM OF BAR WITH MIN. CLEARANCE OF 1/2" FROM MASONRY. THE CLEAR DISTANCE BETWEEN BARS SHALL NOT BE LESS THAN ONE BAR DIAMETER NOR LESS THAN 1". CENTER BARS IN WALLS UNLESS NOTED OTHERWISE.
- REINFORCING BARS SHALL BE STRAIGHT EXCEPT FOR BENDS AROUND CORNERS.
- MIN. LAP SPLICE SHALL BE 36 BAR DIAMETERS. WIRE TIE LAP SPLICES.
- WHEN A FOUNDATION DOWEL DOESN'T LINE UP WITH A VERTICAL CORE. IT SHALL NOT BE SLOPED MORE THAN 1:6. DOWELS SHALL BE GROUTED IN TO A CORE IN VERTICAL ALIGNMENT, EVEN IF IT IS IN A CELL ADJACENT TO VERTICAL WALL REINFORCEMENT.
- HORIZONTAL WALL REINFORCING SHALL BE ZINC COATED COLD DRAWN TRUSS TYPE DUR-O-WALL (OR EQUIVALENT) CONFORMING TO ASTM A82 SPACED AT 16' O.C. MAX. HORIZONTAL JOINT REINFORCING SHALL CONSIST OF (2) 9 GA OR LARGER HORIZONTAL BARS WELD CONNECTED WITH 12 GA OR LARGER CROSS-WIRES. ZINC COATING CONFORM TO ASTM A116-73. LAP SPLICE JOINT REINFORCEMENT 12-INCHES MIN.
- PROVIDE HORIZONTAL JOINT REINFORCEMENT AT MASONRY OPENINGS SUCH AS DOORS AND WINDOWS. CONTINUE JOINT REINFORCING FOR THE FIRST AND SECOND BLOCK COURSE ABOVE AND BELOW MASONRY OPENING. EXTEND JOINT REINFORCING A MIN. OF TWO FEET BEYOND OPENINGS.
- CLEANOUTS SHALL BE PROVIDED IN THE BOTTOM COURSE OF MASONRY IN EACH GROUT POUR WHEN THE POUR HEIGHT EXCEEDS 5'. CLEANOUTS SHALL BE SAW-CUT 4" x 4".
- GROUT POUR HEIGHT SHALL NOT EXCEED 24'. PLACE GROUT IN 5' MAX. LIFTS HEIGHTS.
- CONSOLIDATE GROUT POURS AT THE TIME OF PLACEMENT BY MECHANICAL MEANS AND RECONSOLIDATE AFTER INITIAL WATER LOSS AND SETTLEMENT.
- STORE BLOCKS ON PALLETS AND COVER WITH VISQUEEN.
- PLACE ALL MASONRY IN RUNNING BOND WITH 3/8" MORTAR JOINTS. PROVIDE COMPLETE COVERAGE FACE SHELL MORTAR BEDDING HORIZONTAL AND VERTICALL FULLY MORTAR WEBS IN ALL COURSES OF PIERS, COLUMNS, AND PILASTERS AND ADJACENT TO GROUT CELLS.
- MASONRY CONTROL JOINTS SHALL BE INSTALLED AT LOCATIONS INDICATED ON DRAWINGS. ADDITIONALLY INSTALL MASONRY CONTROL JOINTS SPACE AT 26'-0" O.C.

STRUCTURAL STEEL:

- STRUCTURAL STEEL SHALL CONFORM TO THE LATEST EDITION OF THE AISC "SPECIFICATION FOR THE DESIGN, FABRICATION AND ERECTION OF STRUCTURAL STEEL FOR BUILDINGS".
- ALL W SHAPE STEEL SHALL CONFORM TO ASTM 992 (Fy = 50 KSI).
- ALL HOLLOW STRUCTURAL SECTIONS (HSS) SHALL CONFORM TO ASTM A500, GRADE B.
- ALL OTHER STRUCTURAL STEEL SHALL CONFORM TO ASTM A36 (Fy = 36 KSI).
- ALL ANCHOR BOLTS SHALL CONFORM TO ASTM A307 U.N.O.
- ALL HIGH STRENGTH BOLTS SHALL CONFORM TO ASTM A325 U.N.O.
- BOLTED CONNECTIONS SHALL USE HIGH STRENGTH BOLTS.
- BOLTS IN MOMENT FRAMES SHALL USE HIGH STRENGTH SLIP CRITICAL BOLTS. SLIP CRITICAL CONNECTIONS SHALL HAVE CONTACT SURFACES MEETING CLASS A SURFACE CONDITIONS.
- WELDED CONNECTIONS SHALL CONFORM TO THE LATEST EDITION OF AMERICAN WELDING SOCIETY CODE, AWS D11.
- ALL WELDED CONNECTIONS SHALL USE E70XX, LOW HIDROGEN ELECTRODES U.N.O. ELECTRODES SHALL BE PROTECTED FROM MOISTURE.
- BOLTED CONNECTIONS SHALL CONFORM TO THE REQUIREMENTS OF "SPECIFICATIONS FOR STRUCTURAL JOINTS USING ASTM A325 OR A490 BOLTS" AS APPROVED BY RESEARCH COUNCIL ON STRUCTURAL CONNECTIONS (RCSC). USE BEARING TYPE BOLTS WITH THREAD ALLOWED ACROSS THE SHEAR PLANE.
- ALL STEEL CONNECTIONS SHALL BE WELDED AROUND WITH 1/4" FILLET WELD UNLESS OTHERWISE NOTED, EXCEPT FOR SLOTTED CONNECTIONS.
- EXPANSION BOLTS SHALL BE GALVANIZED CARBON STEEL COMPONENTS, ZINC-PLATED TO COMPLY WITH ASTM B 633 AND FF-S 325, GROUP II, TYPE 4, CLASS I.
- FULL PENETRATION WELDS SHALL BE MADE AGAINST A 1/8" x 1" BACKER PLATE TACK WELDED IN PLACE BELOW THE WELD. PENETRATION WELDS SHALL BE EQUIVALENT IN DEPTH AND LENGTH TO THE PARTS JOINED.
- SUBMIT ALL STRUCTURAL STEEL/LIGHT GAGE SHOP DRAWINGS SIGNED AND SEALED BY A REGISTERED PROFESSIONAL ENGINEER. SHOP DRAWINGS SHALL INCLUDE MEMBER SIZES, MATERIAL SPECIFICATION, CONNECTIONS AND/OR ANY OTHER ITEMS REQUIRED BY GOVERNING BUILDING CODE OR JURISDICTION.
- NO FABRICATION SHALL BE STARTED PRIOR TO SHOP DRAWINGS APPROVAL.

STRUCTURAL LUMBER:

- WOOD CONSTRUCTION, INCLUDING LUMBER, CONNECTIONS, AND DETAILS SHALL COMPLY WITH THE REQUIREMENTS OF AMERICAN INSTITUTE OF TIMBER CONSTRUCTION AND THE NATIONAL FOREST AND PAPER ASSOCIATION'S CURRENT "NATIONAL DESIGN SPECIFICATION FOR WOOD CONSTRUCTION".
- ALL STRUCTURAL WOOD MEMBERS SHALL COMPLY WITH FOLLOWING MINIMUM DESIGN VALUES:

SPECIES		Fb	Ft (a)	Fv (a)	Fc ⊥ (a)	Fc ǁ (b)	E	Emin
HEMFIR #2		850 psi	525 psi	150 psi	405 psi	1300 psi	1300000 psi	470000 psi
SPF #2		875 psi	450 psi	135 psi	425 psi	1150 psi	1400000 psi	510000 psi
THICKNESS	WIDTH	SOUTHERN PINE #2						
2" TO 4"	2" TO 4"	1100 psi	675 psi	175 psi	565 psi	1450 psi	1400000 psi	510000 psi
	5" TO 6"	1000 psi	600 psi	175 psi	565 psi	1400 psi	1400000 psi	510000 psi
	8"	925 psi	550 psi	175 psi	565 psi	1350 psi	1400000 psi	510000 psi
	10"	800 psi	475 psi	175 psi	565 psi	1300 psi	1400000 psi	510000 psi
	12"	750 psi	450 psi	175 psi	565 psi	1250 psi	1400000 psi	510000 psi
MICROLAM LVL (ML)		2600 psi	1555 psi	285 psi	750 psi	2510 psi	1900000 psi	965710 psi
PARALLAM PSL 1.8E		2400 psi	1755 psi	190 psi	425 psi	2500 psi	1800000 psi	914880 psi
PARALLAM PSL 2.0E		2900 psi	2025 psi	290 psi	750 psi	2900 psi	2000000psi	1016535 psi
TIMBERSTRAND LSL1.3E		1900 psi	1075 psi	400 psi	680 psi	1400 psi	1300000psi	660750 psi
TIMBERSTRAND LSL1.55E		2325 psi	1070 psi	310 psi	800 psi	2050 psi	1550000psi	787815 psi

- ALL EXTERIOR WOOD MEMBERS EXPOSED TO WEATHER SHALL BE PRESSURE TREATED PER APPLICABLE CODES/STANDARDS.
- ALL FASTENERS/HARDWARE EXPOSED TO WEATHER OR IN CONTACT WITH TREATED WOOD SHALL BE HOT DIP GALVANIZED OR STAINLESS STEEL OR Z-MAX COATED OR APPROVED FOR SUCH USE BY MANUFACTURER.
- PREVENT DIRECT CONTACT OF INTERIOR WOOD WITH CONCRETE OR MASONRY. PROTECT ALL WOOD FROM MOISTURE BY APPLYING APPROVED WRAP AND AVOID DIRECT CONTACT WITH MASONRY OR CONCRETE.
- CONTRACTOR SHALL SUBMIT SHOP DRAWINGS FOR ENGINEER'S REVIEW AND APPROVAL PRIOR TO ORDERING JOISTS FOR CONSTRUCTION.
- FLOOR & ROOF FRAMING/DIRECTION SHOWN ON THE DRAWINGS ARE SCHEMATIC AND FOR REFERENCE ONLY AND SHALL NOT BE CONSIDERED AS SHOP DRAWINGS. SHOP DRAWINGS FROM MANUFACTRER SHALL BE FOLLOWED FOR JOIST/TRUSS PLACEMENTS.
- ALL MECHANICAL, PLUMBING ELECTRICAL OR ANY OTHER COMPONENTS FROM OTHER DISCIPLINES SHALL BE COORDINATED BY MANUFACTURER IN SHOP DRAWINGS AS WELL AS ON THE FIELD. NOTIFY ARCHITECT/STRUCTURAL ENGINEER IF ANY DESCRIPANCY OR CONFLICT FOUND.
- ALL STRUCTURAL FRAMING MEMBERS SUPPORTING FLOOR JOISTS/TRUSSES ARE DESIGNED BASED ON LAYOUT REPRESENTED ON DRAWINGS. ANY MODIFICATION, CHANGE OR ADDITION SHALL NOT BE DONE WITHOUT PRIOR APPROVAL BY ARCHITECT/ENGINEER. SHOP DRAWINGS SHALL BE SUBMITTED FOR REVIEW FOR ANY SUCH CHANGE.
- ROOF/FLOOR TRUSS MANUFACTURER SHALL PROVIDE NECESSARY BRACING TO WEB MEMBERS AS REQUIRED BY GOVERNING CODE/STANDARD.
- ALL ROOF SHEATHING SHALL BE APA RATED 7/16" C-C, C-D OR STRUCTURAL II WITH SPAN RATING OF 48/24 PER "AMERICAN PLYWOOD ASSOCIATION". PROVIDE MIN. NAILING PATTERN W/ 8d COMMON NAILS @ 6" O.C. ON EDGES AND 12" O.C. IN FIELD. PROVIDE PLYWOOD CLIPS AT PLYWOOD EDGES BETWEEN EACH FRAMING MEMBER.
- ALL FLOOR SHEATHING SHALL BE 3/4" THICK T&G APA RATED AND WITH SPAN RATING OF 48/24 OR STURD-I-FLOOR 24" O.C. RATED PLYWOOD SHALL BE GLUED AND NAILED. INSTALL 100% GLUE LINE AND MIN. NAILING PATTERN OF 10d COMMON NAILS @ 6" O.C. ON EDGE SUPPORTS AND 12" O.C. INTERMEDIATE SUPPORTS.
- ALL EXTERIR STUD WALL SHEATHING SHALL BE MIN. 7/16" APA RATED NAILED WITH 8d NAILS @ 6" O.C. ON EDGES AND 12" O.C. IN FIELD U.N.O. REFER TO SHEAR WALL SCHEDULE FOR MORE INFORMATION.
- ALL WOOD PLATE SPLICES SHALL BE STAGGERED AT 4'-0" MIN.
- PROVIDE MIN. (2) 2x12 UP TO 4'-0" SPAN, (2) ML10 FOR 4'-0" TO 6'-0" SPAN, (2) ML12 FOR 6'-0" TO 9'-0" SPAN WHERE HEADER/LINTEL/BEAM SIZES ARE NOT SPECIFIED ON PLANS. ANY SPANS LARGER THAN 9'-0" SUPPORITNG FRAMING MEMBERS (POSTS/BEAMS/BEARING WALLS) AND NOT SPECIFIED ON PLANS SHALL BE NOTIFIED TO ENGINEER IMMEDIATELY.
- PROVIDE MIN. DOUBLE JOISTS OR SPECIAL FLOOR TRUSS UNDER (2) 2x POSTS AND (2) PLY MICROLAM LVL OR SPECIAL FLOOR TRUSS TO MATCH FLOOR THICKNESS UNDER (3) 2x POSTS UNLESS NOTED OTHERWISE ON THE PLAN. CONTRACTOR SHALL NOTIFY ENGINEER FOR SUPPORTING STRUCTURAL MEMBER FOR ALL OTHER POST SIZES COMING FROM ABOVE.
- PROVIDE MIN. (3) 2x POSTS UNDER ALL BEAMS/GIRDER TRUSSES/HEADERS U.N.O. ON PLANS.
- PROVIDE SOLID BLOCKING WITHIN FLOOR SYSTEM FOR POSTS/JACKSTUDS COMING FROM ABOVE.
- ALL POSTS/JACKS SHALL CONTINUE DOWN TO FOUNDATION/STRUCTURAL MEMBERS SUCH AS BEAMS/GIRDERS/GIRDER TRUSSES. NOTIFY ENGINEER IF ANY DESCRIPANCY FOUND DURING CONSTRUCTION.
- PROVIDE DOUBLE JOISTS OR SPECIAL TRUSS UNDER ALL WALLS/PARTITIONS EXTEND 1/2 OR MORE OF FRAMING SPAN.
- PROVIDE BLOCKING BETWEEN TOP FLANGE/CHORD OF JOISTS/FLOOR TRUSS SUPPORTING PARTITION WALL FROM ABOVE.
- PROVIDE FULL HEIGHT BLOCKING BETWEEN FLOOR JOISTS/TRUSSES SUPPORTING BEARING WALL FROM ABOVE.
- ALL DIMENSION LUMBER SHALL BE DRESSED S4S AND SHALL BEAR GRADE STAMP OF THE MANUFACTURER'S ASSOCIATION.
- ALL LUMBER SHALL BE SEASONED AND FREE FROM WRAP.
- PROVIDE SOLID BLOCKING BETWEEN JOISTS AND RAFTERS AT ALL BEARING POINTS AND AT MIN. OF 8'-0" O.C.
- PROVIDE STRONG BACKS AT MIN. OF 10'-0" O.C. AT ALL FLOOR TRUSSES.
- PROVIDE CONTINUOUS RIM BOARD AT PERIMETER AND AT END BEARING WALLS WHEN I-JOISTS ARE USED FOR FLOOR FRAMING.
- PROVIDE MIN. 1 3/4" BEARING AT END AND 3 1/2" MIN. BEARING AT INTERMEDIATE SUPPORT WHEN I-JOISTS ARE USED FOR FLOOR FRAMING.
- PROVIDE WEB-STIFFENERS, SQUASH BLOCKS, BEARING BLOCKS, BLOCKING PANELS, FILLER BLOCKS, BACKER BLOCKS AS RECOMMENDED BY MANUFACTURER. REFER TO MANUFACTURER'S GUIDELINES FOR INSTALLATION AND FASTENING.
- PRE-ENGINEERED/PRE-FABRICATED WOOD ROOF/FLOOR TRUSSES SHALL BE IN ACCORDANCE WITH "DESIGN SPECIFICATIONS FOR METAL PLATE CONNECTED WOOD TRUSSES " BY "TRUSS PLATE IINSTUTE (TPI - I)"
- PROVIDE HURRICANE CLIPS TO RESIST UPLIFT AS SHOWN ON SHOP DRAWINGS. PROVIDE SIMPSON "H2.5" HURRICANE CLIP MIN.
- REFER & FOLLOW "BCSI" GUIDES B1 THRU B11 FOR HANDLING, INSTALLING, RESTRAINING AND BRACING OF METAL PLATE CONNECTED WOOD TRUSSES.
- INSTALLATION OF PRE-ENGINEERED/PRE-FABRICATED ROOF AND/OR FLOOR TRUSSES SHALL BE DONE PER TRUSS DESIGN DRAWINGS AND TRUSS ENGINEER SHALL BE RESPONSIBLE FOR PROVIDING ANY REPAIRS OR ALTERATIONS IN TRUSS CONFIGURATIONS.

EXISTING CONDITIONS:

- ALL EXISTING STRUCTURAL MEMBERS TO REMAIN INTACT UNLESS SPECIFICALLY NOTED TO BE REMOVED BY MOST RECENT DEMOLITION DOCUMENTS BY ARCHITECT OR OTHERWISE NOTED ON THESE DRAWINGS.
- ALL INFORMATION ON THESE DRAWINGS RELATED TO EXISTING CONDITIONS ARE PROVIDED BASED ON AVAILABLE CONTRACT DRAWINGS OR INFORMATION PER ARCHITECTURAL DRAWINGS. CONTRACTOR IS RESPONSIBLE FOR FIELD VERIFYING ALL EXISTING CONDITIONS AND NOTIFY STRUCTURAL ENGINEER IF ANY DISCREPANCY IS FOUND BETWEEN CONTRACT DRAWINGS AND EXISTING CONDITIONS.
- THE PORTION OF THE STRUCTURE THAT IS SHOWN TO BE STRUCTURALLY MODIFIED HAVE BEEN DESIGNED ACCORDING TO BEST ENGINEERING PRACTICE. HOWEVER WE DO NOT ASSUME RESPONSIBILITY FOR ANY DAMAGE THAT MAY ARISE FOR ANY PORTION OF THE BUILDING NOT REDESIGNED, ALTERED OR CONSTRUCTED UNDER THIS SET OF DESIGN DRAWINGS. WE DO NOT ASSUME ANY RESPONSIBILITY OR LIABILITY TOWARDS DEFICIENCIES IN THE CONDITION OF THE BUILDING PRIOR TO RENOVATION PER NEW CONTRACT DRAWINGS.
- CONTRACTOR SHALL FIELD VERIFY ALL DIMENSIONS PRIOR TO COMMENCEMENT OF ANY WORK.

WOOD FASTENERS/CONNECTORS:

- FASTENERS USED BELOW GRADE TO ATTACH PLYWOOD TO EXTERIOR WALLS OR CRAWL SPACE STUD WALLS OR KNEE WALL CONSTRUCTION OVER FOUNDATION SHALL BE TYPE 304 OR 316 STAINLESS STEEL.
- ALL MECHANICAL WOOD CONNECTORS SHALL BE CLEARLY SPECIFIED ON SHOP DRAWINGS SUPPLIED BY MANUFACTURER AND SHALL BE DESIGNED FOR APPROPRIATE LOAD AS REQUIRED BY GOVERNING CODE/JURISDICTION.
- ALL MECHANICAL CONNECTORS AND/OR FASTENERS INCLUDING NAILS/BOLTS/SCREWS EXPOSED TO CONCRETE/MASONRY/WEATHER SHALL BE HOT DIP GALVANIZED OR STAINLESS STEEL OR APPROVED BY MANUFACTURER FOR SUCH USE.
- BOLT HOLES SHALL BE A MIN. OF 1/32" TO A MAX. OF 1/16" LARGER THAN THE BOLT DIAMETER.
- A METAL PLATE OR WASHER NOT LESS THAN A STANDARD OVERSIZED CUT WASHER SHALL BE BETWEEN THE WOOD AND THE BOLT HEAD AND BETWEEN THE WOOD AND THE NUT.
- SNUG TIGHT ALL BOLTS. TIGHTEN CONNECTIONS WHICH HAVE LOOSENED DUE TO WOOD SHRINKAGE.
- INSTALL BOLTS TO EXCLUDE THREADED PORTIONS OF BOLTS FROM SHEAR PLANES.
- LAG SCREWS SHALL BE INSTALLED IN PRE-DILLED HOLES.
- THE CLEARANCE HOLE FOR THE SHANK SHALL HAVE THE SAME DIAMETER AS THE SHANK AND THE SAME DEPTH OF PENETRATION AS THE LENGTH OF THE SHANK.
- THE LEAD HOLE FOR THE THREADED PORTION SHALL HAVE A DIAMETER EQUAL TO 75% FOR SOUTHERN PINE, 70% FOR OTHER SPECIES OF THE SHANK DIAMETER AND A MIN. LENGTH EQUAL TO LENGTH OF THREADED PORTION.
- WOOD SILL PLATE SHALL BE ANCHORED TO CONCRETE/MASONRY W/ 1/2" DIA. ANCHOR BOLTS WITH MIN. 7" EMBEDMENT AND 6'-0" O.C. AND 12" MAX. FROM PLATE ENDS OR SPLICES. REFER TO MANUFACTURER'S RECOMMENDATIONS FOR ALTERNATE ANCHORS. REFER TO SHEAR WALL SCHEDULE FOR ADDITIONAL ANCHORAGE REQUIREMENTS. PROVIDE MIN. 3"x3" WASHERS TO ANCHOR BOLTS WITH ENGINEERED SHEAR WALLS (SW) ARE SPECIFIED ON DRAWINGS.
- REFER TO FASTENING SCHEDULE FOR MORE INFORMATION.

NOTES ON FASTENER SCHEDULE (IRC 2018 - TABLE R602.3(1)):

a. ALL NAILS ARE SMOOTH-COMMON, BOX OR DEFORMED SHANKS EXCEPT WHERE OTHERWISE STATED. NAILS USED FOR FRAMING AND SHEATHING CONNECTIONS SHALL HAVE MIN. AVERAGE BENDING YIELD STRENGTHS AS SHOWN 80 ksi FOR SHANK DIAMETER OF 0.192 INCHES, 90 ksi FOR SHANK DIAMETERS LARGER THAN 0.142 INCHES BUT NOT LARGER THAN 0.177 INCHES AND 100 ksi FOR SHANK DIAMETERS OF 0.142 INCHES OR LESS
b. STAPLES ARE 16 GAGE WIRE AND HAVE A MINIMUM 7/16 INCH ON DIAMETER CROWN WIDTH
c. NAILS SHALL BE SPACED AT NOT MORE THAN 6" O.C. AT ALL SUPPORTS WHERE SPANS ARE 48" OR GREATER
d. 4'-0" x 8'-0" OR 4'-0" x 9'-0" PANELS SHALL BE APPLIED VERTICALLY.
e. SPACING OF FASTENERS NOT INCLUDED IN THIS TABLE SHALL BE BASED ON TABLE R602.3(2) OF IRC 2018.
f. FOR REGIONS HAVING BASIC WIND SPEED OF 110 MPH OR GREATER 8d DEFORMED (2 1/2" x 0.120) NAILS SHALL BE USED FOR ATTACHING PLYWOOD AND WOOD STRUCTURAL PANEL ROOF SHEATHING TO FRAMING WITHIN MIN. 48" DISTANCE FROM GABLE END WALLS, IF MEAN ROOF HEIGHT IS MORE THAN 25'-0" UP TO 35'-0" MAXIMUM.
g. FOR REGIONS HAVING BASIC WIND SPEED OF 100 MPH OR LESS, NAILS FOR ATTACHING WOOD STRUCTURAL PANEL ROOF SHEATHING TO GABLE END WALL FRAMING SHALL BE SPACED 6" O.C. WHEN BASIC WIND SPEED IS GREATER THAN 100 MPH, NAILS FOR ATTACHING PANEL ROOF SHEATHING TO INTERMEDIATE SUPPORTS SHALL BE SPACED 6" O.C. FOR MIN. 48" DISTANCE FROM RIDGES, EAVES AND GABLE END WALLS; AND 4" O.C. TO GABLE END WALL FRAMING.
h. GYPSUM SHEATHING SHALL CONFORM TO ASTM C 1396 AND SHALL BE INSTALLED IN ACCORDANCE WITH GA 253. FIBERBOARD SHEATHING SHALL CONFORM TO ASTM C 208.
i. SPACING OF FASTENERS ON FLOOR SHEATHING PANEL EDGES APPLIES TO PANEL EDGES SUPPORTED BY FRAMING MEMBERS AND REQUIRED BLOCKING AND AT ALL FLOOR PERIMETERS ONLY. SPACING OF FASTENERS ON ROOF SHEATHING PANEL EDGES APPLIES TO PANEL EDGES SUPPORTED BY FRAMING MEMBERS AND REQUIRED BLOCKING. BLOCKING OF ROOF OR FLOOR SHEATHING PANEL EDGES PERPENDICULAR TO THE FRAMING MEMBERS NEED NOT BE PROVIDED EXCEPT AS REQUIRED BY OTHER PROVISIONS OF THE CODE. FLOOR PERIMETER SHALL BE SUPPORTED BY FRAMING MEMBERS OR SOLID BLOCKING.

ABBREVIATIONS:

ARCH= ARCHITECTURAL
B.E.W= BOTTOM EACH WAY
BM= BEAM
BRG= BEARING
COL= COLUMN
CONC.= CONCRETE
CONT= CONTINUOUS
DBL= DOUBLE
EA= EACH
E.E.= EACH END
EXP= EXPANSION
EXT.= EXTERIOR
FDN= FOUNDATION
FTG= FOOTING
G.T.= GIRDER TRUSS
HDR= HEADER
INT.= INTERIOR
INFO INFORMATION
J= JACK STUD
MANUF= MANUFACTURER
MIN= MINIMUM
MAX= MAXIMUM
ML= MICROLAM
N.T.S= NOT TO SCALE
O.C.= ON CENTER
PLYWD= PLYWOOD
P.T.= PRESSURE TREATED
P.A. = POST FROM ABOVE
REQD= REQUIRED
S= KING STUD
SPF= SPRUCE PINE FIR
SP= SOUTHERN PINE
STL= STEEL
TYP= TYPICAL
W/= WITH
WD= WOOD
WWF= WELDED WIRE FABRIC
U.N.O.= UNLESS NOTED OTHERWISE

NO.	DESCRIPTION OF BUILDING ELEMENT	FASTNERS
1	BLOCKING BETWEEN JOISTS OR RAFTERS TO TOP PLATE (TOE NAIL)	(3) 8d (2 1/2" x 0.113")
2	CEILING JOISTS TO PLATE (TOE NAIL)	(3) 8d (2 1/2" x 0.113")
3	CEILING JOISTS NOT ATTACHED TO PARALLEL RAFTER, LAPS OVER PARTIAIONS (FACE NAIL)	(3) 10d
4	COLLAR TIE RAFTER (FACE NAIL) OR 1 1/4" x 20 GAGE RIDGE STRAP	(3) 10d (3" x 0.128")
5	RAFTER TO PLATE (TOE NAIL)	(2) 16d (3 1/2" x 0.135")
6	ROOF RAFTERS TO RIDGE, VALLEY OR HIP RAFTERS TOE NAILS FACE NAILS	(4) 16d (3 1/2" x 0.135") (3) 16d (3 1/2" x 0.135")
7	BUILT-UP CORNER STUDS	10d (3" x 0.128") @ 24" O.C.
8	BUILT-UP HEADER, TWO PIECES W/ 1/2" SPACER	16d (3 1/2" x 0.135") @ 16" O.C. ALONG EACH EDGE
9	CONTINUED HEADER, TWO PIECES	16d (3 1/2" x 0.135") @ 16" O.C. ALONG EACH EDGE
10	CONTINUOUS HEADER TO STUD (TOE NAIL)	(4) 8d (2 1/2" x 0.113")
11	DOUBLE STUDS (FACE NAILS)	10d (3" x 0.128") @ 24" O.C.
12	DOUBLE TOP PLATES (FACE NAILS)	10d (3" x 0.128") @ 24" O.C.
13	DOUBLE TOP PLATES, MIN. 48" OFFSET OF END JOINSTS (FACE NAILS IN LAPPED AREA)	(8) 16d (3 1/2" x 0.135")
14	SOLE PLATE TO JOIST OR BLOCKING (FACE NAIL)	16d (3 1/2" x 0.135") @ 16" O.C.
15	SOLE PLATE TO JOIST OR BLOCKING (FACE NAIL) AT BRACED WALL PANELS	(3) 16d (3 1/2" x 0.135") @ 16" O.C.

NO.	DESCRIPTION OF BUILDING ELEMENT	FASTNERS
16	STUD TO SOLE PLATE (TOE NAIL)	(3) 8d (2 1/2" x 0.113") OR (2) 16d (3 1/2" x 0.135")
17	TOP OR SOLE PLATE TO STUD (END NAIL)	(2) 16d (3 1/2" x 0.135")
18	TOP PLATES, LAPS AT CORNERS AND INTERSECTIONS (FACE NAIL)	(2) 10d (3" x 0.128")
19	1" BRACE TO EACH STUD AND PLATE (FACE NAIL)	(2) 8d (2 1/2" x 0.113") OR (2) STAPLES 1 3/4"
20	1" x 6" SHEATHING TO EACH BEARING (FACE NAIL)	(2) 8d (2 1/2" x 0.113") OR (2) STAPLES 1 3/4"
21	1" x 8" SHEATHING TO EACH BEARING (FACE NAIL)	(2) 8d (2 1/2" x 0.113") OR (3) STAPLES 1 3/4"
22	WIDER THAN 1" x 8" SHEATHING TO EACH BEARING (FACE NAIL)	(3) 8d (2 1/2" x 0.113") OR (4) STAPLES 1 3/4"
23	JOIST TO SILL OR GIRDER (TOE NAIL)	(3) 8d (2 1/2" x 0.113")
24	1" x 6" SUBFLOOR OR LESS TO EACH JOIST (FACE NAIL)	(2) 8d (2 1/2" x 0.113") OR (2) STAPLES 1 3/4"
25	2" SUBFLOOR TO JOIST OR GIRDER (BLIND AND FACE NAIL)	(2) 16d (3 1/2" x 0.135")
26	RIM JOIST TO TOP PLATE (TOE NAIL) ROOF APPLICATOIN ALSO	8d (2 1/2" x 0.113") @ 6" O.C.
27	2" PLANKS (PLANK & BEAM - FLOOR & ROOF)	(2) 16d (3 1/2" x 0.135") @ E.E.
28	BUILT-UP GIRDERS & BEAMS, 2" LUMBER LAYERS	10d (3" x 0.128") NAIL EA. LAYER 32" O.C. AT TOP AND BOTT. STAGGERED. TWO NAILS AT ENDS AND AT EA. SPLICE.
29	LEDGER STRIP SUPPORTING JOISTS OR RAFTERS	(3) 16d (3 1/2" x 0.135") AT EACH JOIST OR RAFTER

NO.	BUILDING MATERIALS	DESCRIPTION OF FASTENERS	NAILING PATTERN	
			EDGES	INTERMEDIATE SUPPORTS
WOOD STRUCTURAL PANELS, SUBFLOOR, ROOF AND INTERIOR WALL SHEATHING TO FRAMING & PARTICLE BOARD WALL SHEATHING TO FRAMING				
30	3/8" - 1/2"	6d (2" x 0.113") COMMON NAIL (SUBFLOOR, WALL) (j) 8d (2 1/2" x 0.131") COMMON NAIL (ROOF)	6"	12" (g)
31	5/16" - 1/2"	6d (2" x 0.113") COMMON NAIL (SUBFLOOR, WALL) 8d (2 1/2" x 0.131") COMMON NAIL (ROOF) (f)	6"	12" (g)
32	19/32" - 1"	8d (2 1/2" x 0.131") COMMON NAIL	6"	12" (g)
33	1 1/8" - 1 1/4"	10d (3" x 0.148") COMMON NAIL OR 8d (2 1/2" x 0.131") DEFORMED NAIL	6"	12"
OTHER WALL SHEATHING (h)				
34	1/2" STRUCTURAL CELLULOSIC FIBERBOARD SHEATHING	1/2" GALVANIZED ROOFING NAIL, 7/16' CROWN OR 16 GA. STAPLE, 1" CROWN & 1 1/4" LONG	3"	6"
35	25/32" STRUCTURAL CELLULOSIC FIBERBOARD SHEATHING	1 3/4" GALVANIZED ROOFING NAIL, 7/16' CROWN OR 16 GA. STAPLE, 1" CROWN & 1 1/2" LONG	3"	6"
36	1/2" GYPSUM SHEATHING (d)	1 1/2" GALVANIZED ROOFING NAIL OR 1 1/2" LONG GALVANIZED STAPLES, OR 1 1/4" SCREWS TYPE W OR S.	7"	7"
37	1/2" GYPSUM SHEATHING (d)	1 3/4" GALVANIZED ROOFING NAIL OR 1 5/8" LONG GALVANIZED STAPLES, OR 1 5/8" SCREWS TYPE W OR S.	7"	7"
WOOD STRUCTURAL PANELS, COMBINATION OF SUBFLOOR UNDERLAYMENT TO FRAMING				
38	3/4" AND LESS	6d (2" x 0.120") DEFORMED NAIL OR 8d (2 1/2" x 0.131") COMMON NAIL	6"	12"
39	7/8" - 1"	8d (2 1/2" x 0.131") COMMON NAIL OR 8d (2 1/2" x 0.120") DEFORMED NAIL	6"	12"
40	1 1/8" - 1 1/4"	10d (3" x 0.148") COMMON NAIL OR 8d (2 1/2" x 0.120") DEFORMED NAIL	6"	12"

© COPYRIGHT 2016
Structural Engineering content of this drawings are property of structBIM LLC and are issued for this project only. Any re-use or re-production of these drawings shall not be done without written consent of structBIM LLC. These drawings are to be read in conjuction with project specifications and drawings from other consultants. These drawings shall not be used as shop drawings. Do not scale drawings, use dimensions as specified.

GTMARCHITECTS

7735 OLD GEORGETOWN ROAD
SUITE 700
BETHESDA, MD 20814
(240)333-2000
(240)333-2001 FAX
WWW.GTMARCHITECTS.COM

GTM

Seal

STATE OF MARYLAND · KAUSHAL KANSARA · 40082 · PROFESSIONAL ENGINEER

Consultant

structBIM ENGINEERS
WE DESIGN....WE BIM
46400 BENEDICT DR, SUITE #211
PHONE: 703-657-4481
E-MAIL: info@structBIM.com

Project

21 HIGH STREET, LOT 3
BROOKVILLE, MD 20833

I certify that these documents were prepared or approved by me, and that I am a duly licensed Professional Engineer under the laws of the State of Maryland, license number 40082, Expiration Date: 02-13-2023.

N

Issue Description *Date*

structBIM Project No. 21-0245
Checked By KK
Drawn By KK
Scale 1/4" = 1'-0"

Sheet Title
GENERAL NOTES

Sheet No.
SG

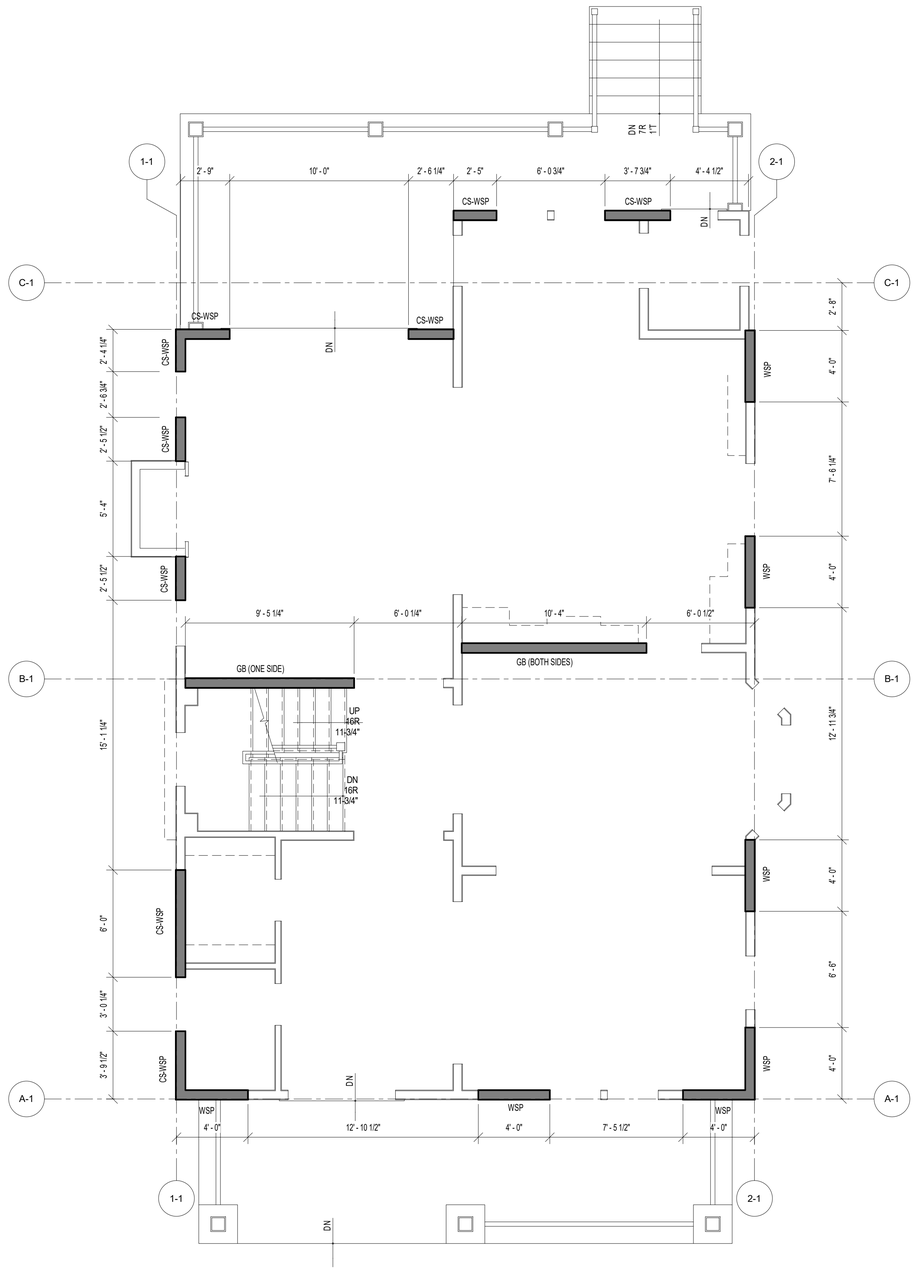

1 SWB1 FIRST FLOOR WALL BRACING PLAN
SCALE: 1/4" = 1'-0"

Ultimate Wind Speed (mph)		115									
BWL Designation		A-1		B-1		C-1		1-1		2-1	
No. of Floors above BWL		1		1		1		1		1	
BWP Method		WSP		GB		CS-WSP		WSP		WSP	
Average BWL Spacing (ft)		23.5		22.75		22.16		32.33		32.33	
Tabular Requirement (ft)		8.55		14.01		7.04		11.20		11.20	
Adjustments	Exposure	B	1.00	B	1.00	B	1.00	B	1.00	B	1.00
	Eave-to-Ridge Ht. (ft)	13.50	1.11	13.50	1.11	13.50	1.11	13.50	1.11	13.50	1.11
	Max. Wall Ht. (ft)	9.00	0.95	9.00	0.95	9.00	0.95	9.00	0.95	9.00	0.95
	No. of BWLs	2	1.00	2	1.00	3	1.30	3	1.30	3	1.30
	Omit Interior Finish?	No	1.00	No	1.00	No	1.00	No	1.00	No	1.00
	Added Hold-downs?	No	1.00	No	1.00	No	1.00	No	1.00	No	1.00
	Joints Blocked?	Yes	1.00	Yes	1.00	Yes	1.00	Yes	1.00	Yes	1.00
	Fasteners @ 4" o.c.?	No	1.00	No	1.00	No	1.00	No	1.00	No	1.00
Required BWP Length (ft)		8.98		14.71		9.61		15.28		15.28	
Actual BWPs	BWP	Method	Length	Method	Length	Method	Length	Method	Length	Method	Length
	Contributing Length (ft)										
	1	WSP	4.00	GB (ss)	4.75	CS-WSP	2.75	CS-WSP	3.75	WSP	4.00
	2	WSP	4.00	GB (ds)	10.33	CS-WSP	2.50	CS-WSP	6.00	WSP	4.00
	3	WSP	4.00			CS-WSP	3.58	CS-WSP	2.50	WSP	4.00
	4					CS-WSP	2.50	CS-WSP	2.50	WSP	4.00
	5							CS-WSP	2.33		
	6										
	7										
Actual BWP Length (ft)		12.00		15.08		11.33		17.08		16.00	
Actual ≥ Required?		PASS		PASS		PASS		PASS		PASS	
BWPs ≤ 20' Apart?		Yes		Yes		Yes		Yes		Yes	
≥ 2 Panels in BWL?		Yes		Yes		Yes		Yes		Yes	
BWP 10' from Ends?		Yes		Yes		Yes		Yes		Yes	
Continuous Sheathing End Conditions		End 1	End 2	End 1	End 2	End 1	End 2	End 1	End 2	End 1	End 2
		3	3	NA	NA	3	3	3	3	1	1
BWL Compliance		PASS		PASS		PASS		PASS		PASS	

Actual BWPs: WSP:Prectual; SPB:Prectual; GB(ss):ss0.5:actual; GB(ds):Prectual; CS-PF:H1.5:actual; PF:0H1.5:actual; PF:H:actual; AB:H:actual

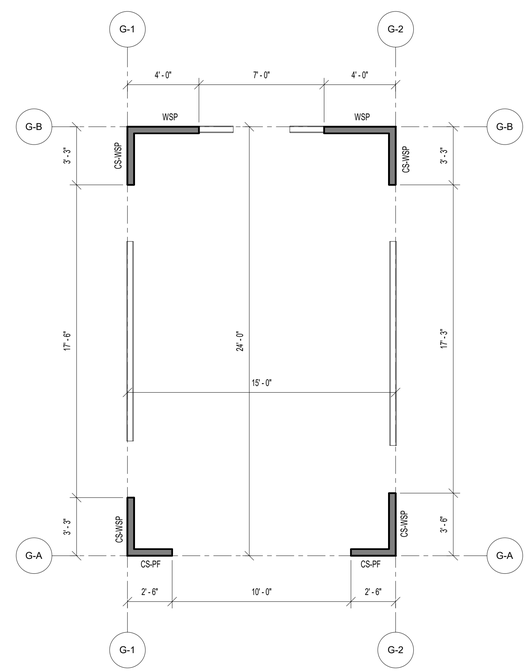

2 SWB1 FIRST FLOOR WALL BRACING PLAN
SCALE: 1/4" = 1'-0"

PLAN LEGENDS & SYMBOLS:

- INDICATES BEARING WALL
- INDICATES DRAIN HOLE FROM ABOVE
- INDICATES JOIST/TRUSS HANEGR (REFER TO SHOP DWGS)
- INDICATES FRAMING DIRECTION
- INDICATES REBAR DIRECTION
- (_J+_S) — INDICATES NO. OF KING STUDS AT EACH END; INDICATES NO. OF JACK STUDS AT EACH END
- WF?? — INDICATES WALL FOOTING; WIDTH OF WALL FOOTING IN INCHES
- TS?? — INDICATES THICKENED SLAB; WIDTH OF THICKENED SLAB IN INCHES
- Fx.x — INDICATES ISOLATED COLUMN FOOTING; INDICATES SIZE OF FOOTING IN DECIMAL FEET
- ML?? — MICROLAM LVL 2.0E; DEPTH OF MICROLAM LVL IN INCHES
- LSL?? — LAMINATED STRAND LUMBER 1.7E; DEPTH OF TIMBERSTAND LSL BEAM IN INCHES
- PSL?? — PARALLAM STRAND LUMBER 2.0E; WIDTHxDEPTH OF MEMBER
- CC — COLUMN CAP
- CB — COLUMN BASE
- HD — HOLD DOWN ANCHOR
- MS — METAL STRAP
- H — JOIST/TRUSS/BEAM HANGER
- HC — HURRICANE CLIPS

WALL BRACING/SHEAR WALL SCHEDULE

MARK	DESCRIPTION	FASTENING PATTERN
CS-PF	7/16" APA RATED OSB SHEATHING	8d COMMON NAILS (2 1/2" x 0.131") @ 6" O.C. ON EDGES & 12" O.C. IN-FIELD
CS-WSP	7/16" APA RATED OSB SHEATHING	8d COMMON NAILS (2 1/2" x 0.131") @ 6" O.C. ON EDGES & 12" O.C. IN-FIELD
GB (BOTH SIDES)	1/2" GYPSUM WALL BOARD SHEATHING	1 1/2 " GALVANIZED ROOFING NAILS OR 1 1/2" GALVANIZED STAPLES OR 1 1/4" SCREWS TYPE W OR S @ 7" O.C. ON EDGES & IN-FIELD
GB (ONE SIDE)	1/2" GYPSUM WALL BOARD SHEATHING	1 1/2 " GALVANIZED ROOFING NAILS OR 1 1/2" GALVANIZED STAPLES OR 1 1/4" SCREWS TYPE W OR S @ 7" O.C. ON EDGES & IN-FIELD
WSP	7/16" APA RATED OSB SHEATHING	8d COMMON NAILS (2 1/2" x 0.131") @ 6" O.C. ON EDGES & 12" O.C. IN-FIELD

© COPYRIGHT 2016
Structural Engineering content of this drawings are property of structBIM LLC and are issued for this project only. Any re-use or re-production of these drawings shall not be done without written consent of structBIM LLC. These drawings are to be read in conjuction with project specifications and drawings from other consultants. These drawings shall not be used as shop drawings. Do not scale drawings, use dimensions as specified.

GTM ARCHITECTS

7735 OLD GEORGETOWN ROAD
SUITE 700
BETHESDA, MD 20814
(240)333-2000
(240)333-2001 FAX
WWW.GTMARCHITECTS.COM

Seal

STATE OF MARYLAND — VISHAL KANOJIA — 40082 — PROFESSIONAL ENGINEER

Consultant

structBIM ENGINEERS
WE DESIGN....WE BIM
46400 BENEDICT DR, SUITE #211
PHONE: 703-657-4481
E-MAIL: info@structBIM.com

Project

21 HIGH STREET, LOT 3
BROOKVILLE, MD 20833

I certify that these documents were prepared or approved by me, and that I am a duly licensed Professional Engineer under the laws of the State of Maryland, license number 40082, Expiration Date: 02-13-2023.

Issue Description	*Date*

structBIM Project No.	21-0245
Checked By	KK
Drawn By	KK
Scale	1/4" = 1'-0"

Sheet Title
FIRST FLOOR WALL BRACING PLAN

Sheet No.

SWB1

COPYRIGHT, 2016 structBIMEngineers, LLC.
PLOTTED ON: 4/15/2022 12:50:13 PM

FILE NAME:

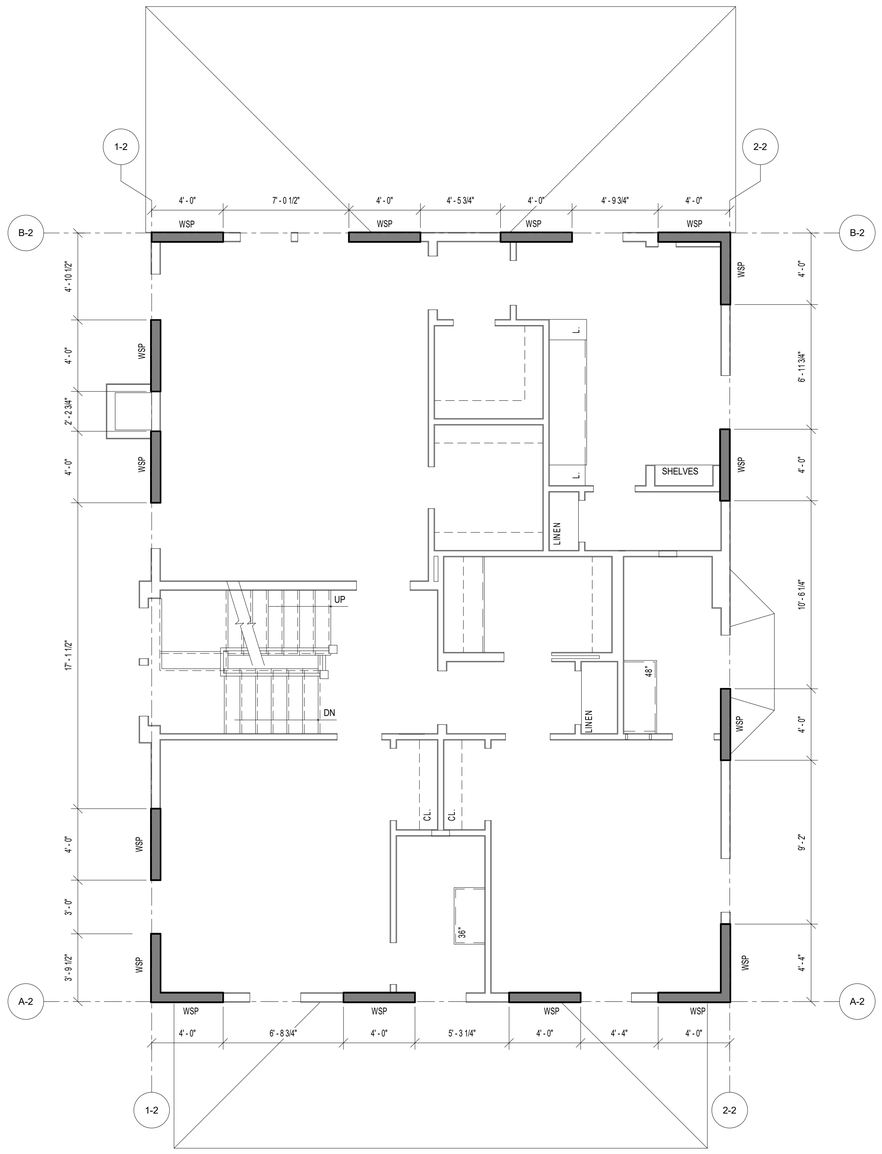

1 SWB2 SECOND FLOOR WALL BRACING PLAN

SCALE: 1/4" = 1'-0"

Ultimate Wind Speed (mph)		115							
BWL Designation		A-2		B-2		1-2		2-2	
No. of Floors above BWL		0		0		0		0	
BWP Method		WSP		WSP		WSP		WSP	
Average BWL Spacing (ft)		43		43		32.33		32.33	
Tabular Requirement (ft)		7.60		7.60		5.85		5.85	
Adjustments	Exposure	B	1.00	B	1.00	B	1.00	B	1.00
	Eave-to-Ridge Ht. (ft)	13.50	1.21	13.50	1.21	13.50	1.21	13.50	1.21
	Max. Wall Ht. (ft)	9.00	0.95	9.00	0.95	9.00	0.95	9.00	0.95
	No. of BWLs	2	1.00	2	1.00	2	1.00	2	1.00
	Omit Interior Finish?	No	1.00	No	1.00	No	1.00	No	1.00
	Added Hold-downs?	No	1.00	No	1.00	No	1.00	No	1.00
	Joints Blocked?	Yes	1.00	Yes	1.00	Yes	1.00	Yes	1.00
	Fasteners @ 4" o.c.?	No	1.00	No	1.00	No	1.00	No	1.00
Required BWP Length (ft)		8.74		8.74		6.72		6.72	
Actual BWP's	BWP	Method	Length	Method	Length	Method	Length	Method	Length
	Contributing Length (ft) 1	WSP	4.00	WSP	4.00	WSP	3.75	WSP	4.00
	2	WSP	4.00	WSP	4.00	WSP	4.00	WSP	4.00
	3	WSP	4.00	WSP	4.00	WSP	4.00	WSP	4.00
	4	WSP	4.00	WSP	4.00	WSP	4.00	WSP	4.00
	5								
	6								
	7								
Actual BWP Length (ft)		16.00		16.00		15.75		16.00	
Actual ≥ Required?		PASS		PASS		PASS		PASS	
BWPs ≤ 20' Apart?		Yes		Yes		Yes		Yes	
≥ 2 Panels in BWL?		Yes		Yes		Yes		Yes	
BWP 10' from Ends?		Yes		Yes		Yes		Yes	
Continuous Sheathing End Conditions		End 1	End 2	End 1	End 2	End 1	End 2	End 1	End 2
		3	3	3	3	3	3	3	3
BWL Compliance		PASS		PASS		PASS		PASS	

PLAN LEGENDS & SYMBOLS:

- INDICATES BEARING WALL
- INDICATES DRAIN HOLE FROM ABOVE
- INDICATES JOIST/TRUSS HANEGR (REFER TO SHOP DWGS)
- INDICATES FRAMING DIRECTION
- INDICATES REBAR DIRECTION
- (_J+_S) — INDICATES NO. OF KING STUDS AT EACH END; INDICATES NO. OF JACK STUDS AT EACH END
- WF?? — INDICATES WALL FOOTING; WIDTH OF WALL FOOTING IN INCHES
- TS?? — INDICATES THICKENED SLAB; WIDTH OF THICKENED SLAB IN INCHES
- F.x.x — INDICATES ISOLATED COLUMN FOOTING; INDICATES SIZE OF FOOTING IN DECIMAL FEET
- ML?? — MICROLAM LVL 2.0E; DEPTH OF MICROLAM LVL IN INCHES
- LSL?? — LAMINATED STRAND LUMBER 1.7E; DEPTH OF TIMBERSTAND LSL BEAM IN INCHES
- PSL?? — PARALLAM STRAND LUMBER 2.0E; WIDTHxDEPTH OF MEMBER
- CC — COLUMN CAP
- CB — COLUMN BASE
- HD — HOLD DOWN ANCHOR
- MS — METAL STRAP
- H — JOIST/TRUSS/BEAM HANGER
- HC — HURRICANE CLIPS

WALL BRACING/SHEAR WALL SCHEDULE

MARK	DESCRIPTION	FASTENING PATTERN
CS-PF	7/16" APA RATED OSB SHEATHING	8d COMMON NAILS (2 1/2" x 0.131") @ 6" O.C. ON EDGES & 12" O.C. IN-FIELD
CS-WSP	7/16" APA RATED OSB SHEATHING	8d COMMON NAILS (2 1/2" x 0.131") @ 6" O.C. ON EDGES & 12" O.C. IN-FIELD
GB (BOTH SIDES)	1/2" GYPSUM WALL BOARD SHEATHING	1 1/2 " GALVANIZED ROOFING NAILS OR 1 1/2" GALVANIZED STAPLES OR 1 1/4" SCREWS TYPE W OR S @ 7" O.C. ON EDGES & IN-FIELD
GB (ONE SIDE)	1/2" GYPSUM WALL BOARD SHEATHING	1 1/2 " GALVANIZED ROOFING NAILS OR 1 1/2" GALVANIZED STAPLES OR 1 1/4" SCREWS TYPE W OR S @ 7" O.C. ON EDGES & IN-FIELD
WSP	7/16" APA RATED OSB SHEATHING	8d COMMON NAILS (2 1/2" x 0.131") @ 6" O.C. ON EDGES & 12" O.C. IN-FIELD

© COPYRIGHT 2016
Structural Engineering content of this drawings are property of structBIM LLC and are issued for this project only. Any re-use or re-production of these drawings shall not be done without written consent of structBIM LLC. These drawings are to be read in conjuction with project specifications and drawings from other consultants. These drawings shall not be used as shop drawings. Do not scale drawings, use dimensions as specified.

GTM ARCHITECTS

7735 OLD GEORGETOWN ROAD
SUITE 700
BETHESDA, MD 20814
(240)333-2000
(240)333-2001 FAX
WWW.GTMARCHITECTS.COM

GTM

Seal

STATE OF MARYLAND — KISHAL KANDEL — 40082 — PROFESSIONAL ENGINEER

Consultant

structBIM ENGINEERS
WE DESIGN....WE BIM
46400 BENEDICT DR, SUITE #211
PHONE: 703-657-4481
E-MAIL: info@structBIM.com

Project

21 HIGH STREET, LOT 3
BROOKVILLE, MD 20833

I certify that these documents were prepared or approved by me, and that I am a duly licensed Professional Engineer under the laws of the State of Maryland, license number 40082, Expiration Date: 02-13-2023.

N

Issue Description	*Date*

structBIM Project No.	21-0245
Checked By	KK
Drawn By	KK
Scale	1/4" = 1'-0"

Sheet Title
SECOND FLOOR WALL BRACING PLAN

Sheet No.

SWB2

COPYRIGHT, 2016 structBIMEngineers, LLC.

PLOTTED ON: 4/13/2022 12:56:15 PM

FILE NAME:

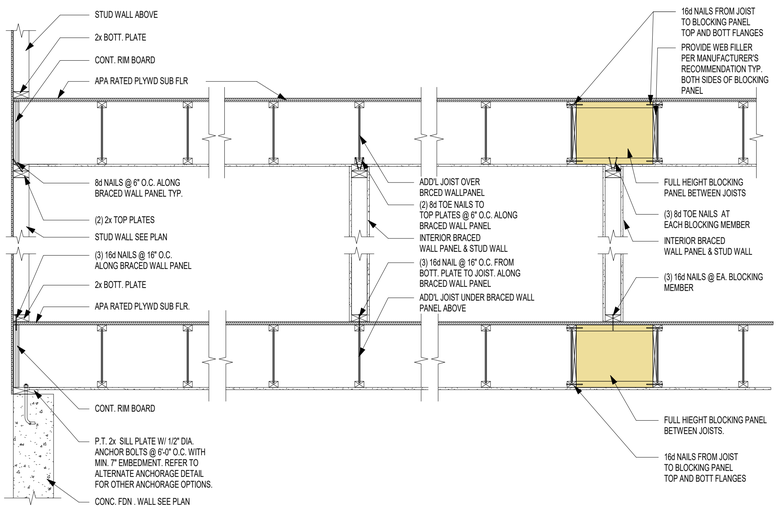

3 / SWB3 BRACED WALL PANEL PARALLEL TO I-JOISTS
SCALE: 3/4" = 1'-0"

WALL BRACING/SHEAR WALL SCHEDULE

MARK	DESCRIPTION	FASTENING PATTERN
CS-PF	7/16" APA RATED OSB SHEATHING	8d COMMON NAILS (2 1/2" x 0.131") @ 6" O.C. ON EDGES & 12" O.C. IN-FIELD
CS-WSP	7/16" APA RATED OSB SHEATHING	8d COMMON NAILS (2 1/2" x 0.131") @ 6" O.C. ON EDGES & 12" O.C. IN-FIELD
GB (BOTH SIDES)	1/2" GYPSUM WALL BOARD SHEATHING	1 1/2 " GALVANIZED ROOFING NAILS OR 1 1/2" GALVANIZED STAPLES OR 1 1/4" SCREWS TYPE W OR S @ 7" O.C. ON EDGES & IN-FIELD
GB (ONE SIDE)	1/2" GYPSUM WALL BOARD SHEATHING	1 1/2 " GALVANIZED ROOFING NAILS OR 1 1/2" GALVANIZED STAPLES OR 1 1/4" SCREWS TYPE W OR S @ 7" O.C. ON EDGES & IN-FIELD
WSP	7/16" APA RATED OSB SHEATHING	8d COMMON NAILS (2 1/2" x 0.131") @ 6" O.C. ON EDGES & 12" O.C. IN-FIELD

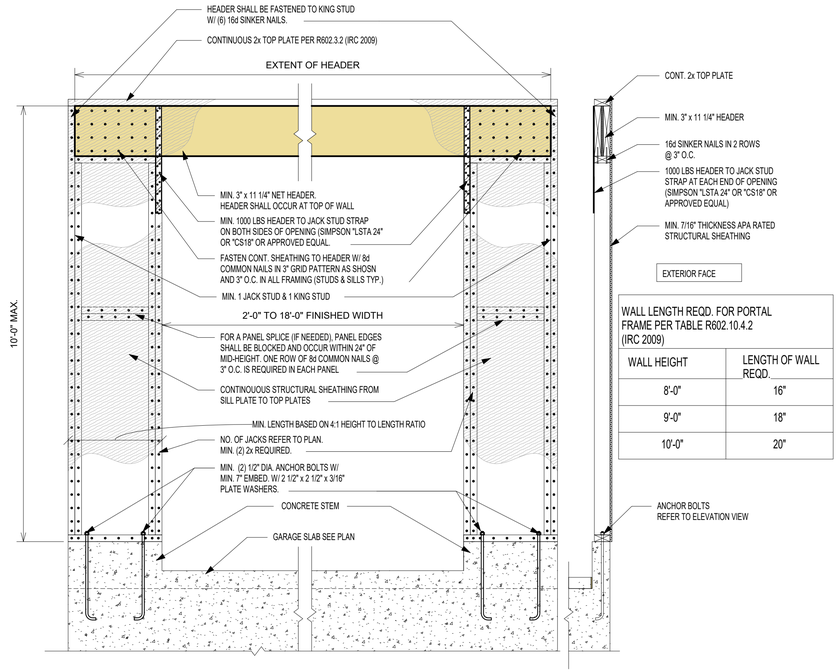

WALL LENGTH REQD. FOR PORTAL FRAME PER TABLE R602.10.4.2 (IRC 2009)

WALL HEIGHT	LENGTH OF WALL REQD.
8'-0"	16"
9'-0"	18"
10'-0"	20"

ELEVATION VIEW

SECTION VIEW

1 / SWB3 PORTAL FRAME @ GARAGE (PFG) LEFT SIDE ONLY
SCALE: 3/4" = 1'-0"

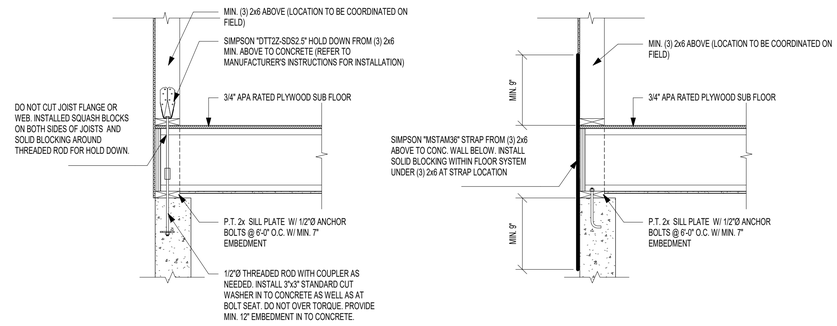

HOLD DOWN OPTION WITH SIMPSON "DTT2Z"

HOLD DOWN OPTION WITH SIMPSON "MSTAM36"

2 / SWB3 TYP. HOLD DOWN DETAILS (APPLY AT CORNERS < 24")
SCALE: 3/4" = 1'-0"

© COPYRIGHT 2016
Structural Engineering content of this drawings are property of structBIM LLC and are issued for this project only. Any re-use or re-production of these drawings shall not be done without written consent of structBIM LLC. These drawings are to be read in conjuction with project specifications and drawings from other consultants. These drawings shall not be used as shop drawings. Do not scale drawings, use dimensions as specified.

GTM ARCHITECTS

7735 OLD GEORGETOWN ROAD
SUITE 700
BETHESDA, MD 20814
(240)333-2000
(240)333-2001 FAX
WWW.GTMARCHITECTS.COM

GTM

Seal

STATE OF MARYLAND · KISHAL KANDEL · 40082 · PROFESSIONAL ENGINEER

Consultant

structBIM ENGINEERS
WE DESIGN....WE BIM
46400 BENEDICT DR, SUITE #211
PHONE: 703-657-4481
E-MAIL: info@structBIM.com

Project

21 HIGH STREET, LOT 3
BROOKVILLE, MD 20833

I certify that these documents were prepared or approved by me, and that I am a duly licensed Professional Engineer under the laws of the State of Maryland, license number 40082, Expiration Date: 02-13-2023.

N

Issue Description	*Date*

structBIM Project No.	21-0245
Checked By	KK
Drawn By	KK
Scale	3/4" = 1'-0"

Sheet Title
WALL BRACING DETAILS & SCHEDULE

Sheet No.

SWB3

COPYRIGHT, 2016 structBIMEngineers, LLC.
PLOTTED ON: 4/19/2022 12:50:22 PM

FILE NAME:

21 HIGH STREET, LOT 3
BROOKEVILLE, MD 20833

PLAT DATA

LOT 3
ADDITION TO BROOK GROVE
OLNEY 8TH ELECTION DISTRICT
MONTGOMERY COUNTY, MD

TOWN OF BROOKEVILLE
ZONED:HISTORIC VILLAGE RESIDENTIAL

FRONT SETBACK= 15'
SIDE SETBACKS= 8'
REAR SETBACK= 40'

15,000 SF (0.344 ACRES)

BUILDING TO BE FULLY SPRINKLERED IN ACCORDANCE WITH 2018 IRC & NFPA13D

GRAPHIC SYMBOLS

- A / A-5 — SECTION SHEET NO.
- A / A-5 — SECTIONAL DETAIL SHEET NO.
- A / A-5 — DETAIL TARGET, ENLARGEMENT SHEET NO.
- N / A-12 — EXTERIOR ELEVATION SHEET NO.
- N / W 2 A-12 E / S — INTERIOR ELEVATION SYMBOL DRAWING NO. SHEET NO.
- ELEV. 42.00 — DATUM ELEVATION
- 106 — ROOM NUMBER
- 4 — DOOR NUMBER
- W1 — WINDOW TYPE
- SF1 / A-6 — STOREFRONT ELEVATION
- 1 — REVISION NUMBER
- P1 — PARTITION TYPES SEE SCHEDULE
- T — TEMPERED GLASS

LIST OF DRAWINGS

001	COVER SHEET
002	SPECIFICATIONS
003	STUCCO SPECIFICATIONS
004	DOOR & WINDOW SCHEDULES
EC001	THERMAL ENVELOPE
EC002	THERMAL ENVELOPE
EC003	ENERGY CALCULATIONS
SITE	BUILDING PERMIT SITE PLAN
A100	BASEMENT PLAN
A101	FIRST FLOOR PLAN
A102	SECOND FLOOR PLAN
A103	ATTIC PLAN
A104	ROOF PLAN
A200	FRONT ELEVATION
A201	RIGHT SIDE ELEVATION
A202	REAR ELEVATION
A203	LEFT SIDE ELEVATION
A300	BUILDING SECTIONS
A301	BUILDING SECTIONS
A302	DETAILS
A303	DETAILS
A304	DETAILS
A305	DETAILS
A700	GARAGE PLANS
A701	GARAGE ELEVATIONS
A702	GARAGE SECTIONS & DETAILS
S0	FOUNDATION PLAN
S1	FIRST FLOOR FRAMING PLAN
S2	SECOND FLOOR FRAMING PLAN
S3	LOFT FLOOR FRAMING PLAN
S4	ROOF FRAMING PLAN
SD0	FOUNDATION DETAILS
SD0.1	FOUNDATION DETAILS
SD1	FRAMING DETAILS
SD2	FRAMING DETAILS
SD3	FRAMING DETAILS
SG	GENERAL NOTES
SWB1	FIRST FLOOR WALL BRACING PLAN
SWB2	SECOND FLOOR WALL BRACING PLAN
SWB3	WALL BRACING DETAILS & SCHEDULE

CALCULATIONS

BASEMENT:	
FINISHED:	1,252 SF
UNFINISHED:	132 SF
TOTAL:	1,384 SF
FIRST FLOOR:	1,514.3 SF
FRONT PORCH:	237.3 SF
REAR PORCH:	270 SF
SECOND FLOOR:	1,386.6 SF
ATTIC:	651.4 SF
DETACHED GARAGE:	360 SF
SIDE PORCH:	232 SF
TOTAL GFA:	6,035.6 SF
HOUSE FOOTPRINT:	2,021.6 SF

LOT COVERAGE:

MONTGOMERY COUNTY
LOT= 15,000 SF
15,000 SF- 6,000 SF= 9,000 SF
9,000 SF x .001= 9.0%
30%- 9%= 21% MAX COVERAGE (3,150 SF)
1,874.3 SF/ 15,000 SF= 12.5%

MATERIAL SYMBOLS

EARTH, CONCRETE, STEEL, BRICK, FINISH WOOD, CONCRETE MASONRY UNIT, ROUGH LUMBER BLOCKING, GYPSUM SHEATHING, SLAT BOARD, ACOUSTICAL TILE

ABBREVIATIONS

ABOVE FINISH FLOOR	AFF	EACH	EA	INTERIOR	INT	PLATE	PL	VERTICAL	VERT
ACOUSTIC	ACST	EAST	E			PLUMBING	PLMB	VESTIBULE	VEST
ADJUSTABLE	ADJ	ELECTRIC, ELECTRICAL	ELEC	JANITOR'S CLOSET	JC	PLYWOOD	PLYWD	VINYL COMPOSITE TILE	VCT
AIR CONDITIONING	A/C	ELEVATION	EL	JOINT	JT	POLYVINYL CHLORIDE	PVC	VOLTS	V
AIR HANDLING	AH	ELEVATOR	ELEV	JOIST	JST	POUND	LB		
AIR HANDLING UNIT	AHU	EMERGENCY POWER	EM	JUNCTION BOX	JB	POUNDS PER SQUARE INCH	PSI	WALLBOARD	WB
ALTERNATE	ALT	EMPTY CONDUIT	EC			PREFABRICATED	PREFAB	WELDED WIRE FABRIC	WWF
ALTERNATE CURRENT	AC	ENGINEER	ENGR	LAMINATED	LAM	PREFINISHED	PREFIN	WIDTH	W
ALUMINUM	AL	ELECTRIC WATER COOLER	EWC	LAVATORY	LAV	PRELIMINARY	PRELIM	WINDOW	WDW
AMPERES	AMP	EXHAUST	EXH	LEFT HAND	LH			WITH	W/
ANCHOR BOLT	AB	EXISTING	EX	LENGTH	L	QUARRY TILE	QT	WITHOUT	W/O
ARCHITECT	ARCH	EXPANSION	EXP	LIBRARY	LIB			WOOD	WD
AT	@	EXPANSION JOINT	EXP JT	LINEAR FEET	LF	RADIUS	RAD, R		
AVERAGE	AVG	EXTERIOR	EXT	LONG LEG HORIZONTAL	LLH	REFRIGERATOR	REF	YARD	YD
				LONG LEG VERTICAL	LLV	REINFORCING	REINF		
BEAM	BM	FAHRENHEIT	F			REQUIRED	REQD		
BOARD	BD	FEET PER MINUTE	FPM	MAINTENANCE	MAINT	RESILIENT	RES		
		FEET, FOOT	FT	MANUFACTURER	MFR	RETURN AIR	RA		
CABINET	CAB	FINISH	FIN	MASONRY	MAS	REVISION	REV		
CATALOG	CAT	FIRE EXTINGUISHER CAB.	FEC	MASONRY OPENING	MO	RIGHT HAND	RH		
CEILING	CLG	FLOOR	FL	MAXIMUM	MAX	ROOM	RM		
CENTERLINE	CL	FLUORESCENT	FLOUR	MECHANICAL	MECH	ROUGH OPENING	RO		
CERAMIC TILE	CT	FIRE RATED	FR	MEDIUM	MED				
CLOSET	CLO			MEZZANINE	MEZZ	SCHEDULE	SCHD		
COLUMN	COL	GAUGE	GA	MINIMUM	MIN	SECTION	SECT		
COMPANY	CO	GALLON	GAL	MISCELLANEOUS	MISC	SERVICE SINK	SS		
CONCRETE	CONC	GALLONS PER MINUTE	GPM	MOUNTED	MTD	SIMILAR	SIM		
CONCRETE MASONRY UNITS	CMU	GALVANIZED	GALV	MULLION	MUL	SOUND TRANSMISSION	STM		
CONFERENCE	CONF	GENERAL CONTRACTOR	GC			SPECIFICATION	SPEC		
CONTINUOUS	CONT	GROUNDED FAULT INTERUPT.	GFI	NOT IN CONTRACT	NIC	SQUARE	SQ		
CONTROL JOINT	CJ	GYPSUM	GYP	NOT TO SCALE	NTS	STANDARD	STD		
COORDINATE	COORD	GYPSUM WALLBOARD	GWB	NUMBER	# NO	STAND PIPE	ST		
CORRIDOR	CORR					STAINLESS STEEL	SS		
CUBIC FEET	CF	HANDICAPPED	HDCP	OFFICE	OFF	STATION	STA		
CUBIC FEET PER MINUTE	CFM	HARDWARE	HDW	ON CENTER	OC	STEEL	STL		
		HARDWOOD	HDWD	OPENING	OPNG	STORAGE	STOR		
DEDICATED	DED	HEIGHT	HGT, H	OPPOSITE	OPP	STRUCTURAL	STRUCT		
DEPARTMENT	DEPT	HERTZ	HZ	OUNCE	OZ	SUSPENDED CEILING	SUSP		
DEPTH	D	HOLLOW METAL	HM	OVERALL	OA				
DETAIL	DET	HORIZONTAL	HORIZ	OVERHEAD	OH	TELEPHONE	TEL		
DIAGONAL	DIAG	HORSE POWER	HP			THICK OR THICKNESS	THK		
DIAMETER	DIA	HOT WATER HEATER	HWH	PAINTED	PTD	THRESHOLD	THRSLD		
DIMENSION	DIM	HOUR	HR	PANEL	PNL	TILE	T		
DISHWASHER	DW			PARTITION	PTN	TO BE SELECTED	TBS		
DOOR	DR	INCH	IN	PERPENDICULAR	PERP	TONGUE & GROOVE	T & G		
DOWN	DN	INFORMATION	INFO	PERSONAL COMPUTER	PC	TOP	T		
DRAWING	DWG	INSIDE DIAMETER	ID	PHASE	PH	TYPICAL	TYP		
DRINKING FOUNTAIN	DF	INSULATED, INSULATION	INSUL	PLASTIC LAMINATE	P LAM				

PROJECT INFORMATION

CLIENT/CONTRACTOR
PHIL SARDELIS
10776 TUCKER STREET
BELTSVILLE, MD 20705
240-417-5333
philsardelis@gmail.com

ARCHITECT
GTM ARCHITECTS
CONTACT: LUKE OLSON/DOUGLAS ROBERTS
7735 OLD GEORGETOWN ROAD
BETHESDA, MD 20814
(240) 333-2021
(240) 333-2070 FAX
lolson@gtmarchitects.com

CIVIL ENGINEER
CAS ENGINEERING
CONTACT: JARED SIMS CARHART, PD, MSE
10 SOUTH BENTZ STREET
FREDERICK, MD 21701
301-703-2346 (O)
303-217-1152 (C)
jcarhart@casengineering.com

STRUCTURAL ENGINEER
structBIM ENGINEERS
CONTACT: KAUSHAL KANSARA, P.E.
20130 LAKEVIEW CTR. PLZ.
SUITE 400
ASHBURN, VA 20147
(703) 405-9732 (C)
kaushal@structbim.com

PLANS PREPARED BASED ON THE FOLLOWING CODES:
INTERNATIONAL RESIDENTIAL CODE 2018

REVIEWED
By Michael Kyne at 2:13 pm, May 23, 2022

APPROVED
Montgomery County
Historic Preservation Commission

GTM ARCHITECTS
7735 OLD GEORGETOWN ROAD
SUITE 700
BETHESDA, MD 20814
(240)333-2000
(240)333-2001 FAX
WWW.GTMARCHITECTS.COM

Seal

I certify that these documents were prepared or approved by me, and that I am a duly licensed architect under the laws of the State of Maryland. License number 8888, Expiration Date: 10.06.2022.

Consultant

Project
21 HIGH STREET
LOT 3

Owner

Developer

PERMIT SET	4-11-2022
Issue Description	Date

GTM Project No.	18.0320
Checked By	GTM
Drawn By	LEO/DER
Scale	AS NOTED

Sheet Title
COVER SHEET

Sheet No.
001

COPYRIGHT, 2022 GTM ARCHITECTS, INC.

SPECIFICATIONS FOR RESIDENTIAL CONSTRUCTION

The purpose of the following specifications is to establish the level of quality required for both materials and workmanship. These notes are intended as a general outline; specific and additional requirements are indicated on the drawings. Unless noted otherwise in the contract documents, all Products and Materials shall be installed in strict compliance with the manufacturer's recommendations. The contractor should also note that not all of the items mentioned below may apply to the project.

GENERAL REQUIREMENTS

1. All work shall conform to the International Residential Code (IRC), 2018 edition and all applicable sections of the Montgomery County code for single family construction and applicable building codes including (but not limited to) IECC 2018.
2. The General Contractor shall stake off area of new construction and designate trees and shrubs for removal as required. Protect all landscaping beyond the areas of construction.
3. The General Contractor shall coordinate phasing and time limits for new construction with the Owner, so as to establish an acceptable payment schedule related to the status of the project.
4. Any permits required for the project shall be obtained by the General Contractor, unless informed otherwise by the Architect that the permit has been obtained.
5. The General Contractor shall store materials and equipment in a safe and suitable place during the construction process. The Owner is not responsible for any losses of material. The contractor shall be responsible for damage to installed and (or) stored materials until substantial completion or as otherwise noted in the contract document.
6. All debris shall be periodically removed from the site so as to not create a physical or visual hazard to the Owner.
7. The General Contractor shall be licensed in Montgomery County, Maryland, and shall guarantee the project labor and materials for a period of one year after the Architect determines the work to be substantially complete, as per county laws.
8. The General Contractor shall provide competent daily supervision of the project.
9. The General Contractor shall notify the related authorities for inspection of the work as related to the specific areas required by the county.
10. The General Contractor shall Carry Workmen's Compensation Insurance for every person employed by him on the premises and shall maintain such insurance in full force during the entire time of this contract. The General Contractor shall carry Comprehensive General and Automotive Liability Insurance of $25,000 to $50,000 minimum. These requirements can be amended by the Owner if specified by the contract.
11. All drawings, specifications, and copies furnished by the Architect are the documents for the construction of this project only and shall not be used in any other circumstance.
12. The General Contractor shall carefully study the contract documents and report to the Architect any error, omission, or inconsistency they may discover.
13. The General Contractor shall provide and pay for all labor, materials, equipment, tools, machinery and other facilities and services necessary for proper execution and completion of the work, and shall guarantee no mechanic liens against the project at completion.
14. The Contract Sum is stated in the agreement and is the total amount payable by the Owner, which designates the addition, deletion, or revision to the contract. The Change Order must also designate the change in the original contract sum.
15. At least seven days before the date of each progress payment established by the agreement, the General Contractor shall submit to the Architect and Owner an itemized application designating which portion of the work has been completed.
16. The Contractor shall verify dimensions prior to construction, and all discrepancies shall be brought to the attention of the Architect so that clarifications can be made. The Contractor shall field verify all dimensions related to existing conditions. Written dimensions take precedence over scaled sizes. Do not scale drawings to determine missing dimensions.
17. The Contractor shall be responsible to have new utility line services (gas, electric, telephone) installed to the house connection/meter location.

DEMOLITION NOTES

1. Every care shall be taken during demolition to protect the house by means of temporary supports and braces as necessary to prevent any structural failure during removal and replacement of existing structural members.
2. Temporary walls and dust barriers shall be installed as necessary to prevent circulation of dirt and dust into portions of the house that are not part of the work.
3. All dashed walls, fixtures, windows, etc., are to be removed. See Demolition Sheets for additional information.
4. Conduct all demolition operations in compliance with applicable codes and ordinances.
5. Coordinate demolition with work of subcontractors.
6. Maintain the existing structure in a watertight condition at all times.
7. Provide the necessary enclosures to allow the owner to maintain comfortable temperatures within the occupied portions of the home during construction.

GENERAL STRUCTURAL NOTES

1. Work shall be done in accordance with the International Residential Code (IRC), 2018 Edition.
2. The design gravity live loads are as follows:
   - Roof load (snow): 30 LL + 15 DL = 45 PSF
   - Living Spaces: (1st Floor) 40 LL + 15 DL = 55 PSF
   - Sleeping Spaces: (2nd Floor) 30 LL + 15 DL = 45 PSF
   - Exterior Decks: 60 LL + 15 DL = 75 PSF
   - Live Load Deflection Limitation for floors and stairs shall be L/360
   - Live Load Deflection Limitation for roofs shall be L/240

FOUNDATIONS

1. The foundation for the structure has been designed for the assumed bearing pressure of 1,500 PSF. This is to be verified by the contractor prior to the footings being poured. It is also assumed that there is no water condition present.
2. Basement walls have been designed for an assumed equivalent fluid pressure of 55 PSF.
3. Excavations for spread footings and continuous footings shall be cleaned and hand tamped to a uniform surface.
4. Slabs on grade shall be underlaid by a minimum of 4" of granular material having a maximum aggregate size of 1.5 inches and no more than 2% fines. Prior to placing the granular material, the floor subgrade shall be properly compacted, proofrolled, free of standing water, mud, and frozen soil. Before placement of concrete, a (min. 6 mil poly) vapor barrier shall be placed on top of the granular fill and sealed to vertical foundation walls.
5. Bottoms of all exterior footings shall be 2'-6" minimum below finished grade. Footings shall project a minimum of 12" into undisturbed existing natural ground having allowable bearing capacity stated. Depths of footings subject to change if soil conditions are other than assumed.

ENERGY CONSERVATION

1. The following provisions for thermal resistance meet or exceed the requirements stipulated by the 2018 International Energy Conservation Code (IECC), climate zone 4A. These values are the minimum acceptable. See drawings for specific values required for the project.
2. Insulation

		IECC
A.	Ceiling (of uppermost story)	R-49, or R-38 continuous
B.	Vaulted Ceiling sf or 20% of total insulated ceiling area R-30 allowance	R-49 w/lesser of 500
C.	Frame walls (with storm window or double glazing)	R-20 or 13+5 (exterior)
D.	Rim Joists	Equal to wall below
E.	Floors over unheated spaces (including floor overhangs)	R-38
F.	Masonry walls (enclosed heated living areas)	R-13 or R-10 continuous
G.	Slab on grade (heated space) 24" Perimeter Insulation	R-10
H.	Windows	U-0.32 SHGC-0.40
I.	Doors	See section R402.3.4

3. Air Infiltration
   - A. Provide ¼" x 5.5" compressible sill sealer between foundation wall and all sill plates. Sill sealer shall be set such that no gaps exist at sealer butt joints.
   - B. Windows: Not exceeding three tenths (0.3) CFM of sash crack
   - C. Sliding glass doors: not exceeding three tenths (0.3) CFM per square foot of door area
   - D. Swinging doors: Not exceeding five tenths (0.5) CFM per square foot of door area. Provide 1" compressible sill sealer between foundation wall and all sill plates.
   - E. Building thermal envelopes shall be tested per IECC R402.4.1.2 and verified as having air leakage not to exceed 3 air changes per hour.
   - F. Recessed lighting in the thermal envelope shall comply with IECC R402.4.5
   - G. Systems duct and piping installation shall comply with IECC R403 including Whole-House Mechanical Ventilation system installation.

TERMITE CONTROL SOIL TREATMENT

1. Treat soil with Bayer Corporation, Premise 75, in strict accordance with manufacturer's recommendations.
2. Remove all extraneous sources of wood cellulose and other edible materials such as wood debris, tree stumps and roots, stakes, formwork, and construction waste wood from soil within and around foundations. Loosen, rake, and level soil to be treated except previously compacted areas under slabs and footings.
   - A. Slabs-on-Grade and Basement Slabs: Under ground-supported slab construction, including footings, building, slabs, and attached slabs as an overall treatment. Treat soil materials before concrete footings and slabs are placed.
   - B. Foundations: Adjacent soil including soil along the entire inside perimeter of foundation walls, along both sides of interior partition walls, around plumbing pipes and electric conduit penetrating the slab, and around interior column footers, piers, and chimney bases; also along the entire outside perimeter, from grade to bottom of footing. Avoid soil washout around footings.
   - C. Crawlspaces: Soil under and adjacent to foundations as previously indicated. Treat adjacent areas including around entrance platform, porches, and equipment bases. Apply overall treatment only where attached concrete platform and porches are on fill or ground.Crawlspaces used as plenum spaces strictly follow manufacturer's recommendedations.
   - D. Along driplines of roof overhangs without gutters.
   - E. Where condensate lines from mechanical equipment drip or drain to soil.
   - F. At plumbing penetrations through ground-supported slabs.
   - G. Other sites and locations as determined by licensed installer.

WARRANTY

Special Warranty: Manufacturer's standard form, signed by Applicator and Contractor certifying that termite control work, consisting of applied termiticide treatment, will prevent infestation of subterranean termites. If subterranean termite activity or damage is discovered during warranty period of five (5) years from Substantial Completion, re-treat soil and repair or replace damage caused by termite infestation.

CONCRETE

1. All concrete construction shall conform to the latest A.C.I. code 332 and shall comply with ACI 117, "Specifications for Tolerances for Concrete Construction and Materials" unless modified by requirements in the Contract Documents.
2. Concrete shall have natural sand fine aggregates and normal weight coarse aggregates conforming to ASTM C33, Type 1 Portland Cement conforming to ASTM 150, and shall have a minimum 28-day compressive strength (F/C) as follows:
   - F/C = 2,500 PSI for footings, interior slabs on grade (except garages) and fill in concrete blocks
   - F/C = 3,000 PSI for foundation walls exposed to weather.
   - F/C = 3,500 PSI for drives, porches, walks, steps, and garage slabs.
   - F/C = 4,000 PSI for precast concrete units.
3. All poured in place concrete exposed to weather conditions, including the garage floor, shall be air entrained by 6% of concrete volume. No calcium chloride or other admixtures shall be used except as approved in writing by the Owner.
4. Slabs on grade: except where otherwise noted, shall be min. 4" thick, reinforced with 6x6 W1.4xW1.4 WWF Lap mesh 6" in each direction. Slab shall be placed on a layer of 6 mil polyethylene, sealed to fdn. walls, over a 4" layer of washed gravel. Refer to drawings for location of thermal insulation.
5. Concrete finish: Exposed exterior steps, stoops and slabs shall first have a steel trowel finish and then a very light broom finish. Exposed interior and garage shall receive a steel trowel finish.
6. Expansion joints: Non-organic, Owner approved, expansion joint material shall be cast in place where slabs abut masonry or concrete walls to prevent bonding between the two materials.
7. Curing: Exposed concrete surfaces shall be sealed with an approved chemical curing compound within one hour of the final troweling. Curing compound label shall state that its use will not interfere with adhesion of subsequent floor finishes.
8. Reinforcing steel: Reinforcing steel for the ties shall be intermediate grade deformed billet steel conforming to ASTM spec. A615-40. All other reinforcing steel shall conform to ASTM spec. A615-60. Welded wire fabric to conform to ASTM A-185. Fabric shall be supplied in flat sheets and lapped to mesh at splices. All reinforcing shall be detailed, fabricated and installed in accordance with the latest detailing manual A.C.I. 315.
9. Reinforcement designated as "continuous" shall lap 36 bar diameters at splices unless noted otherwise.
10. Horizontal footing and walls: reinforcement shall be continuous and shall have 90 degree bends and extensions, or corner bars of equivalent size lapped 36 bar diameters, at corners and intersections.
11. Footings:
    - A. Bottom of footings shall extend a minimum of 2'-6" below any surface subject to freezing: footings shall extend at least 12" into undisturbed soil or set on controlled compacted fill. Depth of footing subject to change if soil conditions are other than assumed. Bearing value of soil is assumed to be 1,500 PSF with no water condition present. Minimum bearing value of controlled fill shall be certified by a licensed geotechnical engineer.
12. Anchor bolts: set anchor bolts or approved straps as shown. Bolts for wood sill plates shall be ½" in diameter and project 8" into concrete; set straps or bolts 12" max from end of any plate and 6'-0" max O.C. spacing, unless shown otherwise.

MASONRY

1. Brick shall conform to ASTM C-62. Mortar shall conform to federal specifications SS-C-18IE-type II. Lay brick only when outside temperature is 45° F and rising. Protect all work from cold and frost and ensure that mortar will cure without freezing. Calcium chloride and antifreeze admixture will not be acceptable.
2. Bearing steel and wood beams shall be supported on solid masonry piers as indicated. Other structural members (lintels, etc.) shall be supported on 8" of solid masonry. All beams and lintels shall have minimum horizontal bearing of 4".
3. Anchor bolts: Set anchor bolts or approved anchor straps as required. Bolts for wood sill plates shall be ½" diameter and project 16" into masonry. Set bolts or straps 12" max. from end of any plate.
4. CMU walls shall have horizontal wire joints reinforcement at 16" O.C. vertically, or as indicated.
5. Provide 4" solid masonry on all sides of joists or beams entering masonry party walls.
6. Brick Veneer:
   - A. Secure brick veneer with 16 GA hot-dipped zinc coated wall ties at 16" O.C. horizontally and vertically.
   - B. Provide flashing at first course above grade, at lintels, sills and elsewhere as shown. Provide 3/16" diameter tube weeps or cellular plastic head joint-type weeps at 24" O.C.
   - C. Provide through-wall flashing above all unsheltered openings. Flashing shall be end-dammed at all terminations.
   - D. Install high-density polyethylene or polyester cavity drainage material, equal to "mortar net," above all flashing. Material shall be sized to fill the width of the cavity.
7. Stone Veneer:
   - A. Vapor permeable weather-resistive barriers: two-ply asphalt saturated Kraft Grade D breather type sheathing paper.
     - Basis of design is FortifiberΦ / two-ply super jumbo texΦ 60 minute
     - Reference standard; federal specification W-B-790A, Type I, Grade D, Style 2
     - Moisture vapor transmission: 35 grams minimum; ASTM E 96
     - Water resistance: 150 minutes (Professional), ASTM D 779
8. C.M.U.'s to have water repellent block admixture; 'Dry-Block' by W.R. Grace recommended.
9. Exterior mortar to have water repellent admixture.
10. Unless noted otherwise, tool all joints concave.
11. Fully bed in mortar face shells and webs of first course of CMU.
12. All masonry joints shall be fully filled with mortar, including head joints.

ADHERED MASONRY VENNER

1. The adhered Masonry Veneer (AMV) system shall be installed in compliance with IRC R703.12 and ASTM C1780 "Standard Practice for Installation Methods for Cement-based Adhered Masonry Veneer" and The Masonry Veneer Manufacturers Associations (MVMA) "Installation Guide and Detailing Options for Compliance with ASTM C1780". The cladding unit manufacturers installation recommendations are also to be followed.
2. Two separate layers of Water Resistant Barrier (WRM) shall be provided over the sheating substrate.
3. Galvanized lath shall be securely fastened to the wall structure with approved fasteners. A mortar scratch coat shall fully encapsulate the lath and have a scored surface.
4. Cladding units shall be set over a fully cured mortar scratch coat. Cladding units shall be adjusted to comply with the cladding unit manufacturers recommendations and ASTM C1780. Doors and windows shall be adjusted to provide proper operation of opening.
5. Joints shall be filled with "thumb-print hard" adhesive mortar with a slightly concave profile, unless noted otherwise. Prior to joint filling a field mock-up shall be provided for color and workmanship approval.

STEEL

1. Structural steel shall conform to ASTM A36
2. Steel beams shall conform to ASTM A572 Grade 50.
3. All steel angles, lintels, beams, columns, etc. are to be shop primed with red lead or red oxide primer or approved equal. Structural steel at or below grade shall be painted with two coats on an asphaltic base paint and protected with a minimum of 2" solid masonry or concrete.
4. For all openings or recesses in brick or brick-faced masonry walls not specifically detailed, provide one steel angle for each 4" of wall thickness. Provide lintels according to the schedule below:

Lintel	Masonry Opening	Min. Bearing
L 3-1/2 X 3-1/2 X 1/4	Up to 3'-0"	4"
L 3-1/2 X 3-1/2 X 5/16	3'-1" to 4'-0"	6"
L 4 X 3-1/2 X 1/4	4'-1" to 5'-0"	6"
L 4 X 3-1/2 X 5/16	5'-1" to 6'-0"	6"
L 5 X 3-1/2 X 5/16	6'-1" to 7'-0"	8"
L 6 X 4 X 3/8	7'-1" to 8'-0"	8"

Note: For openings greater than 8'-0", consult with Architect and Engineer.

WOOD & CARPENTRY

1. Unless otherwise noted on drawings, all structural wood members shall be #2 Southern Pine or equal, with the following combination of unit stresses:

Extreme fiber stress in bending	1,200 PSI
Compression parallel to the grain	1,000 PSI
Compression perpendicular to the grain	565 PSI
Modulus of Elasticity Shear Stress	1,500,000 PSI

Installation Tolerance; walls - a maximum out-of-plumb limit of 1/4" in 10' vertically and horizontal in-plane misalignment of 1/8" from adjacent framing shall be achieved. Plates and floors shall be installed within a 1/4" maximum tolerance for straightness relative to the intended location.

2. Manufactured joists and trusses (if shown on drawings) must be designed and certified by a licensed engineer and submitted to the Architect and local building department for approval.
3. Roof rafters and/or trusses shall be connected at each bearing point with one prefab-90 PSI galvanized rafter tie (hurricane clip) by Simpson or approved equal. Similarly, floor joists and trusses shall be connected with one prefabricated joist hanger. Each anchor shall be 18 GA minimum thick.
4. Provide double joists under all parallel partitions, at joists that support headers, and at headers that support joists. Use joist hangers where applicable.
5. All joists and rafters shall be rigidly braced at intervals not exceeding 8'-0".
6. Double studs at header bearing, double joists and rafters at all openings according to schedule below (unless noted otherwise on drawings):
   - Double 2 x 4 Up to 3'-0"
   - Double 2 x 6 Up to 4'-0"
   - Double 2 x 8 Up to 5'-0"
   - Double 2 x 10 Up to 7'-0"
   - Double 2 x 12 Up to 8'-0"

   All double headers and joists shall be joined with a minimum of two rows of 16 d nails 12" on center.
7. Provide blocking, banding, crush blocks, stiffeners, or rim joists, as required, at joist ends.
8. Floor joists shall have a minimum bearing of 2" on framed walls. All beams shall have minimum bearing of 4" bearing on all supports. Provide moisture protection to end of beams pocketed into masonry walls.
9. Wood joists, studs, and beams shall not be cut or notched unless authorized by the Architect. Drilled holes shall be centered at mid-depth of the member and the hole diameter shall not exceed ⅓ the actual depth of the member. No holes shall be drilled within 2' from the ends or within the middle ⅓ of the span. Provide 4" clear between holes.
10. Existing conditions shall be verified by the Contractor. Any existing damaged wood members shall be identified and replaced by the Contractor.
11. Contractor shall be responsible for providing necessary bracing and shoring of existing members and walls while altering the structure.
12. Provide 2x4 intermediate blocking at all bearing and non-bearing partitions.
13. All plywood shall be APA span rated. Use exterior grade plywood wherever edge of face will be exposed to weather. Interior plywood exposed to weather during construction shall be Exposure I min.
    - A. Exterior wall sheathing shall be ½" plywood unless noted otherwise.
    - B. Subflooring shall be ¾" tongue and groove plywood, glued and screwed to the floor joists as per APA recommendations.
    - C. Where spacing of roof structure members is 16" O.C., roof sheathing shall be ½" plywood (¾" where roofing is slate or tile). Where spacing of roof structure members is 24" O.C., roof sheathing shall be ⅝" plywood (¾" where roofing is slate or tile). Provide "H" clips at butt joints of roof sheathing.
14. MICRO-LAM L.V.L. (laminated veneer lumber) beams shall be manufactured by Trus Joist MacMillan or approved equal. Beams shall be installed according to manufacturer's recommendations. When fastening two or more beams together, provide a minimum of two rows of 16 d nails 12" on center.
15. TJI Floor Joists are to be manufactured by Trus Joist MacMillan or approved equal. Install per manufacturer's recommendations.
16. The following wood elements are to be pressure treated with preservative, bearing the AWPA standard use category label UC3B or UC4B (for ground contact):
    - A. Sill plates resting on concrete or masonry walls.
    - B. Sill plates resting on concrete slabs on grade.
    - C. Joists which enter concrete or masonry walls and have less than ½" clearance on tops, sides, and ends.
    - D. Sleepers resting directly on concrete slabs.
    - E. Exterior porch and deck framing, decking, and stairs.
17. Fasteners, hangers, and metal accessories used in pressure treated wood construction shall be type 304 or 316 stainless steel. Treated lumber shall not be placed in contact with aluminum flashing or other aluminum components.
18. Exterior Wood Trim:
    - A. All exterior wood trim shall be clear pine or redwood.
    - B. All trim shall be primed on 6 sides (including cut ends) prior to installation.
    - C. All outside corners shall be mitered and no end grain shall be exposed to view. No butt joints will be accepted
19. Exterior Synthetic Trim shall be "AZEK," with traditional smooth surface. Fasteners, joint cement, and installation procedures shall be in accordance with manufacturer's recommendations.
20. Siding: Refer to drawings for type specified.
    - A. Cement board shall be non-asbestos fiber-cement material complying with ASTM Standard Specification C1186 Grade II, Type A. Materials shall be equal to those manufactured by James Hardie Building Products.
    - B. Wood siding and sidewall Shingles shall be kiln dried Western Red Cedar, "Clear V.G. Heart" grade for clear and transparent stain finishes, and "A Clear" grade for semi-transparent stain or opaque finishes. Semi-transparent stain or opaque finish shall be applied in strict accordance to manufacturer's recommendations; including, but not limited to, substrate preparation and primer/sealer application to all wood surfaces (6-sides). Fasteners shall generally be type 304 stainless steel, but shall be type 316 for coastal applications. Install wood siding and shingle products over "Cedar Breather" by Benjamin Obdyke Inc. and 30# felts in accordance with manufacturer's instructions. Siding installation and finishing shall be as recommended by the Western Red Cedar Lumber Association. Siding shall be sealed prior to installation, fasteners shall be concealed where possible or arranged in a uniform pattern.
21. Coordinate all floor and wall framing with ductwork. Refer to mechanical notes.
22. Folding Attic Access Ladder shall be 22 ½" x 44" with self-trimming flange, pre-finished door panel, and gas-piston counterbalance. The door panel shall have continuous integral weatherstripping, R-10 insulation, and two key operated locking pins to draw the door tight. Ladder steps shall be pine, doweled to pine stringers. Contact Resource Conservation Technology at 410-366-1146. Additional insulation hood shall be provided to meet required insulation value per IECC R402.2.4.

DOORS AND WINDOWS

1. AWI "Custom Standard" shall apply to the workmanship, installation and finishing of wood doors and windows components.
2. The tops, bottoms, and edges of all doors shall be finished.
3. Any defects that prevent the door or window from serving its intented purpose satisfactorily shall be rejected, such as material that is crooked, warped, bowed, chatter marked, plane or tool marked, chipped, or otherwise defective.
4. Doors and windows shall be adjusted to provide proper operation of opening.

RADON DETECTION AND TREATMENT

1. The Contractor shall provide a venting system consisting of a minimum of 3" diameter ABS, PVC or equivalent gas-tight plumbing pipe inserted into the sub-slab gravel base (at all new concrete slabs). A 'T' fitting or equivalent method shall be used to ensure that the pipe opening remains with the sub-slab permeable material. The pipe shall terminate at least 12" above the high side of the roof penetration. Contractor shall coordinate location of pipe with Architect prior to installing the pipe.
2. Install, per IRC, 2018 edition, Appendix F 'Radon Control Methods.'
3. The Contractor shall provide any other measures as required by local codes.

VENTILATION

1. Where attics are indicated to be ventilated, they are to be vented in one of the following ways (refer to drawings for specifics):
   - A. Continuous ridge venting and continuous soffit venting. Ridge vent shall be by Cor-A-Vent or approved equal. Continuous screen soffit vents shall be a minimum of 2" wide. Circular louver vents between each rafter may be used at the soffit if shown on the drawings.
   - B. Screen louvers or vents with an open area equal to one square foot for every 300 square feet of attic space.
2. Provide foundation vents for all crawl spaces. Refer to drawings for locations.
3. Venting for appliances and exhaust fans:
   - A. Provide venting to the exterior as per manufacturer's recommendations for all appliances. Location of ductwork and vent on exterior shall be approved by Architect prior to installation.
   - B. Provide exhaust fans for bathrooms, etc., as shown on drawings. Location of ductwork and vent on exterior shall be approved by Architect prior to installation. Ducts within unconditioned spaces shall be insulated to prevent condensation.
4. Provide Whole-House ventilation system to comply with IECC R403.4

MOISTURE PROTECTION

1. Appropriate sealants shall be selected for each substrate depending upon location (interior or exterior), humidity, moisture conditions, and traffic conditions. Use primers as required.
2. Color of caulking shall be coordinated with adjacent materials and must be approved by Architect prior to application.
3. Joint fillers shall be used:
   - A. To control the depth of sealants in joints.
   - B. To meet the requirements for resilient separations in horizontal joints in floor, pavements, patios, sidewalks, and other light traffic areas.
4. Bond breakers shall be used to prevent adhesion to more than two surfaces.
5. Masonry foundations shall be parged to a thickness of ¾" minimum.
6. Waterproof all below grade foundation walls with a polymer-modified asphalt emulsion similar to TREMCO "TUFF-N-DRI Classic". Dry/ cured membrane thickness shall be minimum 40 mil. Installation and substrate preparation shall be per manufacturer's recommendations. Install subsurface drainage composite similar to CETCO "Aquadrain 10X" over the cured membrane with asphalt emulsion adhesive similar to Henry 111 Insulbond.
7. Footing drains shall be min. 4" in diameter and installed on the exterior of all foundations.
8. All flashing shall be installed according to the building code. An eave flashing strip of 40 mil. self-adhering rubberized asphalt sheet membrane shall be applied to extend from the edge of the roof to a point 24" min. inside the interior wall line of the structure, and at all valleys.
9. All membrane roofing to be approved by Architect prior to installation.
10. All roof shingles to be approved by Architect prior to installation.
11. Asphalt shingle roofs with slopes from 2 in 12 to 4 in 12 shall have two layers of #15 roofing felt applied in accordance with with the International Residential Code.
12. Flashing"
    - A. Through-wall and other concealed flashing shall be a composite of fiberglass fabric, 5 oz. copper and asphalt, equal to York Copper Fabric.
    - B. Exposed flashing shall be 16 oz. copper.
13. Painted aluminum drip strips shall be installed at the eave and rake edges of the roof sheathing for shingle roofs, and above window and door trim where indicated.
14. Exterior Insulation and Finish Systems (EIFS) shall be equal to Dryvit, Residential MD System, with Dryvit drainage mat installed between the secondary weather barrier and the insulation board.
15. Cedar roof shingles shall be No. 1, Blue Label, red cedar. Install over "Cedar Breather" by Benjamin Obdyke Inc. and 30# felts in accordance with manufacturer's instructions.
16. Standing seam roofing shall be 16 ounce copper with water-tight standing seams. For slopes greater than 3 in 12 provide #30 roofing felt underlayment on solid sheathing. For slopes 3 in 12 or less provide self-adhering 40 mil ice and water guard membrane over the entire area to receive standing seam roofing.

FINISHES

Gypsum Wallboard:

1. Gypsum wallboard shall be ASTM C-36 as follows:
   - A. Regular (½"): except where noted.
   - B. Water resistant (½"): at bathroom ceilings and walls that are not tiled.
   - C. Durock interior tile backer board (½"): at all surfaces that have tile.
2. Gypsum boards shall have tapered edges to accommodate joint reinforcement.
3. Provide edge corner beads, trim, taping, and joint compounds as required for the proper completion of the job. Materials shall be by U.S. Gypsum or approved equal.
4. Finishing requirements:
   - A. For typical walls and ceilings provide a Level 4 Finish as defined by the Gypsum Association.
   - B. For surfaces noted to receive semi-gloss or gloss paint provide a Level 5 Finish as defined by the Gypsum Association.

Hardwood Flooring:

1. Unless noted otherwise, provide wood strip flooring where shown on the drawings.
2. Wood strip flooring to be oak. Where abutting existing floor, new floor shall match existing in size and grain. Elsewhere, oak shall be "clear" grade, in accordance with the national Oak Flooring Manufacturer's Association.
3. Install flooring in strict accordance with the recommendation of the National Oak Flooring Manufacturer's Association.
4. After the floors have been sanded, the flooring contractor shall apply a minimum of four stain and urethane samples in two foot by two foot areas on the floor for the owner to review. The owner shall have a minimum of two days to make a selection.

Ceramic Tile:

1. Provide ceramic tile and accessories in accordance with the Tile Council of American Specifications 137.1, in colors and patterns to be specified by the owner.
2. Setting materials: comply with pertinent recommendations contained in the Tile Council of America "Handbook for Ceramic Tile Installation."
3. Installation: comply with ANSI A108.1, ANSI A108.2, and the "Handbook for Ceramic Tile Installation" of the Tile Council of America.
   - A. Extend tile into recesses and under equipment and fixtures to form a complete covering without interruptions.
   - B. Terminate tile neatly at obstruction, edges, and corners, without disruption of pattern or joint alignment.
   - C. Align joints when adjoining tiles on floor, base, trim, and walls are the same size.
   - D. Layout tile work and center the tile fields in both directions in each space or on each wall area.
4. Replacement reserve: Contractor shall furnish to the Owner one unopened box of additional tiles for future repairs and maintenance work.

Carpet:

1. Provide carpeting as indicated on the drawings. Refer to allowances on schedule sheet.

Vinyl Tile:

1. Installation of all vinyl composition tile (VCT) shall be done in a manner which conforms with:
   - ASTM E 648,
   - ASTM E 84, AND
   - ASTM E 662.
2. Replacement reserve: Contractor shall furnish Owner with one unopened box of additional tile for future repairs and maintenance.

Paint:

1. All paint and primers to be Benjamin Moore or approved equal. Refer to schedule for colors and types.
2. All surfaces to be painted shall receive one primer coat and two finish coats.
3. All paint shall be applied according to manufacturer's recommendations.

Architectural Woodwork and Trim:

1. All millwork trim and molding shall be installed accordingly to the quality of standards of the Architectural Woodwork Institute (AWI).
2. All interior trim and millwork shall conform to AWI "custom standards."
3. Flat trim shall be clear pine or approved equal.
4. All corners of trim and siding are to be mitered, except inside corners of interior running trim which shall be coped. Exposed end grains will not be accepted.
5. All millwork and trim shall be installed by craftsmen with experience in work of this type. All work shall be first class in every regard and consistent with the best practices of the trade.

FIRE AND LIFE SAFETY

1. Stairs:
   - A. 7¾" max rise
   - B. 10" min tread
   - C. 6'-8" min head room
   - D. Height of handrails shall be continuous, 34" (min) to 38" (max) above finished stair treads. Handrails required at stairs with 3 or more risers.
   - E. Guardrails shall be 36" (min) to 42" (max) above finished floor.
2. Provide a clear window opening of 5.7 square feet with no less than 20" clear wide and 24" clear high for sleeping area. The sill of this windows shall be no more than 44" above the finished floor.
3. Provide safety glass in all exterior doors, storm doors, sliding glass doors, shower doors, and tub enclosures above and adjacent to spas and tubs and where the glass is closer than 18" to the floor and exceeds 9 square feet in area.
4. Ground metal siding.
5. Smoke detectors shall be provided on every floor, in each bedroom and in each hall outside of bedrooms, and integrated with the electrical system with battery backup.
6. If a fuel-burning appliance, fireplace, or attached garage is present, an interconnected battery back up carbon monoxide alarm or detector must be installed outside all sleeping areas and on all floors. If fuel-buring appliance or fireplace is present in any sleeping area, an interconnected carbon monoxide alarm or detector must also be installed in that room as required per local jurisdiction.
7. Flues shall be class B except solid fuel flues, which shall be class A.
8. Top of flue shall be 2'-0" above any part of structure within 10'-0" of flue.
9. Interior finish of walls and ceiling shall have a flame spread rating not greater than Class III.
10. Carpeting shall meet federal regulation DOC FF-1.
11. Prefab fireplaces shall be (U.L.) rated and installed according to manufacturer's specifications.
12. Provide outside air for combustion in all prefab and masonry fireplaces.

ELECTRICAL AND LIGHTING NOTES

1. Electrical contractor shall size and arrange all circuits in accordance with the National Electric Code as well as all local codes. Service to be upgraded as required.
2. Wall outlets are to be mounted 1'-6" above finished floor unless noted otherwise.
3. Switches are to be mounted 4'-0" above finished floor unless noted otherwise.
4. Mounting heights are to the vertical center of the equipment to the finished elevation of the floor.
5. All new switch and outlet styles are to be approved by Owner prior to installation.
6. Provide hardwired smoke detectors on all floors, located as per Montgomery County Code.
7. Electrician shall locate all fixtures, switches, outlets, etc. prior to running wiring. Owner, Architect, and Electrician to meet at a mutually agreed upon time to review locations. The purpose of which is to allow for possible relocation prior to wiring.
8. Owner is allowed to add an additional ten (10) items (switches, cable, phone, outlet, etc., or any combination) at no additional charge to the owner.
9. Contractor shall determine, based on an on-site review of existing and proposed electrical systems, whether an electrical service heavy-up will be required, and shall include the costs of all required upgrades in their Contract Amount.
10. Provide door bell, transformer, and chime for front door and where indicated. In lieu of Owner's selection otherwise, price shall be based on the following: Illuminated Button - Destination Lighting product number 15921; Transformer - 16V; Chimes - Teiber Model CTSB-or STPW-, in Owner's choice of finish. Verify all selections and mounting locations with Owner prior to purchasing.
11. Per IECC R404.1 90% of installed lighting fixtures must contain high efficacy lamps.

MECHANICAL NOTES

1. All work shall be done in accordance with the International Residential Code (IRC), 2018 Edition, as well as IECC 2018 and other local codes including a compliant Manual J load calculation/ design in accordance with ACCA recommendations.
2. Unless otherwise indicated in Contract Documents, Contractor shall be delegated to design a fully functional and performing mechanical system in accordance with applicable mechanical codes and standards. Contractor shall submit all duct layouts and air handler locations (and thermostat locations) to the Owner and the Architect for approval prior to the commencement of framing. No extras will be given for any modification required to the framing due to ductwork.
3. All exterior unit locations to be coordinated with Owner and Architect.
4. Air conditioners shall be Energy Star rated and shall have a minimum 13 SEER rating with two zones each. Gas furnaces shall have a minimum Annual Fuel Utilization Efficiency rating of 90%.
5. Equipment will be Carrier or approved equal.
6. Ductwork will be galvanized sheet metal and flex.
7. Registers and return grilles are Hart & Cooley or equal.

PLUMBING NOTES

1. All work shall be done in accordance with the International Residential Code (IRC), 2018 Edition, as well as IECC 2018 and other local codes.
2. Contractor shall provide riser diagrams as required for permit, and shall submit to the Architect proposed locations of all waste and supply lines prior to the commencement of framing. No extras will be given for any modification required to the framing due to plumbing lines. Provide cast iron at vertical waste lines.
3. Unless otherwise indicated in Contract Documents. Contractor shall be delegated to design a fully functional and performing water supply and waste system in accordance with applicable plumbing codes and standards. Install water heater and reserve tank per requirements of the house with recirculate system.
4. Provide drain pans under all water heaters and washing machines, and pipe the pan to the sanitary drain upstream of a trap.
5. Contractor shall make a count of existing and proposed fixtures to determine whether a water or sewer upgrade will be required, and shall include the costs of all required upgrades in his Contract Amount. The count of existing fixtures shall be based on an on-site inspection.
6. Provide cast iron at vertical waste lines.
7. Locate plumbing clean out plugs in bottom ⅓" of wall, typical.

STEAM SHOWER

1. Wall construction: Provide ceramic tile over dryset or latex Portland cement mortar bond coat over tile backer board over Dow insulation board over 2x4 studs.
2. Ceiling construction: Same as walls, provide continuous sloped ceiling (½" per foot), and provide rounded inside corner tile at joint between wall and ceiling.
3. Insulate all walls, ceiling, and floor adjacent to steam shower.
4. Steam shower to be watertight, including a watertight shower door.
5. Steam Unit: "Mr. Steam model #MS-150, 6kw or approved equal. Provide the following connections: water inlet ⅜" NPT, steam outlet NPT, drain ⅜" NPT. Follow all manufacturer's specifications.

ROOFTOP-MOUNTED PHOTOVOLTAIC SYSTEMS

1. Structural support for all rooftop-mounted photovoltaic systems and other considerations shall comply with 2018 IRC Section R324.4

STATIONARY STORAGE BATTERY SYSTEMS

1. The installation of battery storage systems shall comply with 2018 IRC Section R327

REVIEWED
By Michael Kyne at 2:13 pm, May 23, 2022

APPROVED
Montgomery County
Historic Preservation Commission

GTM ARCHITECTS

7735 OLD GEORGETOWN ROAD
SUITE 700
BETHESDA, MD 20814
(240)333-2000
(240)333-2001 FAX
WWW.GTMARCHITECTS.COM

GTM

Seal

STATE OF MARYLAND · GEORGE T. MYERS · 8385 · ARCHITECT

I certify that these documents were prepared or approved by me, and that I am a duly licensed architect under the laws of the State of Maryland, license number 8385, Expiration Date: 12-06-2022.

Consultant

Project
21 HIGH STREET LOT 3

Owner

Developer

Issue Description	Date
PERMIT SET	4-11-2022

GTM Project No.	18.0320
Checked By	GTM
Drawn By	LEO/DER
Scale	AS NOTED

Sheet Title

SPECIFICATIONS

Sheet No.
002

COPYRIGHT, 2022 GTM ARCHITECTS, INC.

FILE NAME:

STUCCO FINISH

Part 1 - General

1.1 Summary

A. This Section includes the following:
- Exterior Portland cement plasterwork (stucco) on metal lath.

B. See Sections "Wood and Carpentry" on Specifications Sheet (SP) and section 3.1.A this sheet for additional structural requirements for wood framing and wood sheathing.

1.2 Quality Assurance

A. Samples: For each type of finish coat indicated; 12 by 12 inches, and prepared on rigid backing. Obtain Architect and Owner approval prior to actual installation.

B. Mockups: Before plastering, install mockups of at least 100 sq ft in surface area to demonstrate aesthetic effects and set quality standards for materials and execution.
- Install mockups for each type of finish indicated.
- Approved mockups may become part of the completed work if undisturbed at time of Substantial Completion.

1.3 Project Conditions

A. Comply with ASTM C 926 requirements.

B. Exterior Plasterwork: Apply plaster when ambient temperature is between 50° and 80° F.

C. Apply stucco on south-facing walls only on overcast days.

Part 2 - Products

2.1 Metal Lath

A. Expanded-Metal Lath: ASTM C 847 with ASTM A 653/A 653M, g60 (z180), hot-dip galvanized zinc coating.
- Diamond-Mesh Lath: Self-furring, 3.4 lb/sq yd

2.2 Accessories

A. General: Comply with ASTM C 1063 and coordinate depth of trim and accessories with thicknesses and number of plaster coats required.

B. Zinc and Zinc-coated (Galvanized) Accessories:
- Foundation Weep Screed: Fabricated from hot-dip galvanized steel sheet, ASTM A 653/A 653M, G60 zinc coating.
- Cornerite: Fabricated from metal lath with ASTM A 653/ A 653M, g60, hot-dip galvanized zinc coating.
- External-Corner Reinforcement: Fabricated from metal lath with ASTM A 653/A 653M, G60, hot-dip galvanized zinc coating.
- Cornerbeads: Fabricated from zinc or galvanized steel.
  a. Small-nose style; use unless otherwise indicated.
- Casing Beads: Fabricated from zinc or galvanized steel; square-edged style, with expanded flanges.
- Control Joints: Fabricated from zinc or galvanized steel; one-piece type, folded pair of unperforated screeds in M-shaped configuration; with perforated flanges and removable protective tape on plaster face of control joint.
- Expansion Joints: fabricated with zinc or galvanized steel; folded pair of unperforated screeds in M-shaped configuration; with expanded flanges.
- Two-piece Expansion Joints: Fabricated from zinc or galvanized steel; formed to produce slip-joint and square-edged reveal that is adjustable from ½"-to-⅝" wide; with perforated flanges.

2.3 Miscellaneous Materials

A. Water for Mixing: Potable and free of substances capable of affecting plaster set or of damaging plaster, lath, or accessories.

B. Fiber for Base Coat: alkaline-resistant glass or polypropylene fibers, ½" long, free of contaminants, manufactured for use in Portland cement plaster.

C. Bonding Compound: ASTM C 932.

D. Fasteners for attaching Metal lath to Substrates: Complying with ASTM C 1063.

E. isolation Barrier at Exterior Walls: Tyvek StuccoWrap, as manufactured by Dupont.

2.4 Plaster Materials

A. Portland Cement: ASTM C 150, Type I or II
- Color for Finish Coats: White or Gray as required to match color sample.

B. Colorants for Job-Mixed Finish Coats: Colorfast mineral pigments that produce finish plaster color to match Architect's sample.

C. Lime: ASTM C 206, Type S; or ASTM C 207, Type S.

D. Sand Aggregate: ASTM C 897.
- Color for Job-Mixed Finish Coats: Color to produce sample to match Architect's sample.

E. Ready-Mixed Finish-Coat Plaster: Mill-mixed Portland cement, aggregates, coloring agents, and proprietary ingredients.
- Products:
  a. California Stucco Products Corp., Conventional Portland Cement Stucco.
  b. ChemRex; Thoro Stucco.
  c. Florida Stucco Corp.
  d. Highland Stucco and Lime Products, Inc.
  e. United States Gypsum Co.; Oriental Exterior Finish Stucco.
- Color: To match existing stucco.

2.5 Plaster Mixes

A. General: Comply with ASTM C 926 for applications indicated.
- Fiber Content: Add fiber to base-coat mixes after ingredients have mixed at least two minutes. Comply with fiber manufacturer's written instructions for fiber quantities in mixes, but do not exceed 1 lb of fiber/cu ft of cementitious materials. Reduce aggregate quantities accordingly to maintain workability.

B. Portland Cement Base Coat Mixes:
- Over Metal Lath: Scratch and brown coats for three-coat plasterwork as follows:
  a. Scratch Coat: For cementitious material, mix 1 part Portland cement and ¾ parts lime. Use 2-½ to 4 parts aggregate per part of cementitious material (sum of separate volumes of each component material).
  b. Brown Coat: For cementitious material, mix 1 part Portland cement and ¾ parts lime. Use 3 to 5 parts aggregate per part of cementitious material (sum of separate volumes of each component material).
- Over Brick and Monolithic Concrete:
  a. For cementitious material, mix 1 part Portland cement and 0 to ¾ parts lime. Use 2-½ to 4 parts aggregate per part of cementitious material (sum of separate volumes of each component material).
- Over Brick and Concrete Masonry Unit: Single base coats for two-coat plasterwork as follows:
  a. For cementitious material, mix 1 part Portland cement ¾ to 1-½ parts lime. Use 2-½ to 4 parts aggregate per part of cementitious material (sum of separate volumes of each component material).

C. Portland Cement Job-Mixed Finish-Coat Mixes: For cementitious materials, mix 1 part Portland cement and 1-½ parts lime. use 1-½ to 3 parts aggregate per part of cementitious material (sum of separate volumes of each component material).

D. Factory-Prepared Finish-Coat Mixes: For ready-mixed finish-coat plasters acrylic-based finish coatings, comply with manufacturer's written instructions.

PART 3 - EXECUTION

3.1 Preparation

A. Verify that all sheathing is plywood or OSB, and that all joints are backed by blocking and nailed or screwed to the blocking.

A. Protect adjacent work from soiling, spattering, moisture deterioration, and other harmful effects caused by plastering.

B. Prepare solid-plaster bases that are smooth or that do not have the suction capability required to bond with plaster according to ASTM C 926.

3.2 Installing Metal Lath

A. Expanded-Metal lath: Install according to ASTM C 1063.

3.3 Installing Accessories

A. Install according to ASTM C 1063 and at locations indicated on drawings.

B. Reinforcement for External Corners:
- Install lath-type inside corner reinforcement at exterior locations.
- Install cornerbead at outside corner locations.

C. Control Joints: Install control joints in specific locations approved by Architect for visual effect as follows:
- As required to delineate plasterwork into areas (panels) of the following maximum sizes:
  a. Vertical Surfaces: 144 sq ft
  b. Horizontal and other Non-Vertical Surfaces: 100 sq ft
- At distances between control joints of not greater than 18 feet O.C.
- As required to delineate plasterwork into areas (panels) with length-to-width ratios of not greater than 2-1/2:1.
- Where control joints occur in surface of construction directly behind plaster.
- Where plasterwork areas change dimensions, to delineate rectnagular-shaped areas (panels) and to relieve the stress that occurs at the corner formed by the dimension change.
- Above and below band board in multi-floor buildings.
- As indicated on drawings.

3.4 Plaster Application

A. General: Comply with ASTM C 926.

B. Bonding Compound: Apply on unit masonry and concrete plaster bases.

C. Plaster Finish Coats: Apply to provide float, dash, scraped trowel-textured, skip trowel-textured, brocade (knock-down dash), trowel sweep, combed, sacked (California mission), or other finish selected by the Architect.

D. Acrylic-Based Finish Coatings: Apply coating system, including primers, finish coats, and sealing topcoats, according to manufacturer's written instructions.

3.5 Cutting and Patching

A. Cut, patch, replace, and repair as necessary to accomodate other work and to restore cracks, dents, and imperfections. Repair or replace work to eliminate blistes, buckles, crazing (check cracking), dry outs, efflorescence, sweat outs, and similar defects and where bond to substrate has failed.

REVIEWED
By Michael Kyne at 2:13 pm, May 23, 2022

APPROVED
Montgomery County
Historic Preservation Commission

GTM ARCHITECTS

7735 OLD GEORGETOWN ROAD
SUITE 700
BETHESDA, MD 20814
(240)333-2000
(240)333-2001 FAX
WWW.GTMARCHITECTS.COM

Seal

I certify that these documents were prepared or approved by me, and that I am a duly licensed architect under the laws of the State of Maryland. License number 8888, Expiration Date: 12-31-2020.

Consultant

Project

21 HIGH STREET
LOT 3

Owner

Developer

PERMIT SET	4-11-2022

Issue Description	*Date*

GTM Project No.	18.0320
Checked By	GTM
Drawn By	LEO/DER
Scale	AS NOTED

Sheet Title

STUCCO SPECIFICATIONS

Sheet No.

003

COPYRIGHT, 2022 GTM ARCHITECTS, INC.

FILE NAME:

DOOR SCHEDULE

DOOR				FRAME					HARDWARE	REMARKS
NO.	SIZE	MATERIAL	MANUF.	MAT:	FIN:	HEAD	JAMB	SILL		
BASEMENT										
1	2^{6} x 6^{8}	SOLID CORE MASONITE	T.B.D						H-4	
2	2^{6} x 6^{8}	SOLID CORE MASONITE	T.B.D						H-4	
3	3^{0} x 6^{8}	SOLID CORE MASONITE	T.B.D.						H-4	
4	2^{4} x 6^{8}	SOLID CORE MASONITE	T.B.D						H-3	
5	2^{4} x 6^{8}	SOLID CORE MASONITE	T.B.D.						H-3	
6	2^{6} x 6^{8}	SOLID CORE MASONITE	T.B.D.						H-3	
7	2^{4} x 6^{8}	SOLID CORE MASONITE	T.B.D.						H-4	
FIRST FLOOR										
8	3^{0} x 8^{0}	WOOD & GLASS	T.B.D						H-2	PAINT GRADE W/ 15" TEMPERED SIDELIGHTS
9	2^{4} x 8^{0}	SOLID CORE MASONITE	T.B.D.						H-3	
10	2^{4} x 8^{0}	SOLID CORE MASONITE	T.B.D.						H-4	
11	SCS3-10-OQ x 8-0	WOOD & GLASS	JELDWEN						H-2	TEMPERED, WEATHERSTRIPPED SLIDER
12	2^{8} x 8^{0}	WOOD & GLASS	T.B.D						H-2	PAINT GRADE
SECOND FLOOR										
13	3^{0} x 7^{0}	SOLID CORE MASONITE	T.B.D.						H-3	
14	2^{4} x 7^{0}	SOLID CORE MASONITE	T.B.D.						H-4	
15	2^{4} x 7^{0}	SOLID CORE MASONITE	T.B.D.						H-4	
16	2^{4} x 7^{0}	SOLID CORE MASONITE	T.B.D.						H-3	
17	2^{4} x	GLASS	T.B.D							TEMPERED SHOWER DOOR
18	2^{4} x 7^{0}	SOLID CORE MASONITE	T.B.D.						H-3	
19	2^{4} x 7^{0}	SOLID CORE MASONITE	T.B.D.						H-4	
20	2^{4} x 7^{0}	SOLID CORE MASONITE	T.B.D.						H-3	
21	1 PAIR 2^{0} x 7^{0}	SOLID CORE MASONITE	T.B.D						H-5	
22	2^{6} x 7^{0}	SOLID CORE MASONITE	T.B.D.						H-3	
23	1 PAIR 1^{6} x 7^{0}	SOLID CORE MASONITE	T.B.D						H-5	
24	2^{8} x 7^{0}	SOLID CORE MASONITE	T.B.D.						H-6	POCKET DOOR
25	2^{6} x 7^{0}	SOLID CORE MASONITE	T.B.D.						H-3	
26	1 PAIR 2^{0} x 7^{0}	SOLID CORE MASONITE	T.B.D						H-5	
27	2^{4} x 7^{0}	SOLID CORE MASONITE	T.B.D.						H-3	
ATTIC										
28	2^{4} x 6^{8}	SOLID CORE MASONITE	T.B.D.						H-3	
29	2^{4} x	GLASS	T.B.D						-	TEMPERED SHOWER DOOR
30	2^{6} x 6^{8}	SOLID CORE MASONITE	T.B.D						H-3	
31	2^{4} x 6^{8}	SOLID CORE MASONITE	T.B.D						H-4	
DETACHED GARAGE										
32	10^{0} x 8^{0}	WOOD/GLASS	T.B.D						-	PAINT GRADE
33	3^{0} x 7^{0}	WOOD/GLASS	T.B.D						H-2	PAINT GRADE

HARDWARE SCHEDULE

NOTE: ALL HARDWARE TO BE BY SCHLAGE OR APPROVED EQUAL. (EXCEPT FRENCH DOORS, WHICH ARE TO HAVE STANDARD HARDWARE BY DOOR MANUF.)

H-1	DOUBLE CYLINDER ENTRANCE LOCK, DEADBOLT
H-2	MULTI-POINT LEVER SET BY WINDOW/DOOR MANUF.
H-3	BATH/BEDROOM PRIVACY LOCK
H-4	PASSAGE SET
H-5	BALL CATCHES $ DUMMY KNOBS
H-6	POCKET DOOR HARDWARE
H-7	FRENCH DOOR PRIVACY LOCK-FLUSH BOLT/DUMMY HANDSET COMBO

GENERAL DOOR NOTES:
1. CONFIRM HARDWARE SELECTION WITH OWNER PRIOR TO ORDERING.
2. INTERIOR DOORS TO BE SOLID CORE.
3. DOORS W/ SIDELITES SHALL HAVE 2-2x6 SPACERS BETWEEN UNLESS SHOWN OTHERWISE
4. PROVIDE SAFETY GLASS AT ALL EXTERIOR FRENCH DOORS, PER CODE
5. PROVIDE CHARCOAL SCREENING @ SCREEN DOORS
6. CONNECT GARAGE DOOR TO ALARM SYSTEM PER OWNER

GENERAL NOTES

1. ALL WINDOWS TO HAVE SCREENS (SCREEN FRAMES COLOR T.B.S.).
2. ALL WINDOWS TO BE ALUMINUM CLAD EXTERIOR, PRE-PRIMED INTERIOR.
3. CONFIRM HARDWARE FINISH W/ ARCHITECT & OWNER PRIOR TO ORDER.
4. ALL GLAZING TO BE DOUBLE PANED, LOW E, CLEAR INSULATED.
5. CONFIRM OVERALL WINDOW SCHEDULE W/ ARCHITECT PRIOR TO ORDER.
6. ALL WINDOWS & GLASS DOORS TO BE SIMULATED DIVIDED LITE, 7/8" MUNTIN.. SEE ELEVATIONS FOR MUNTIN CONFIGURATIONS
7. PROVIDE WHITE JAMB LINERS.
8. ALL EXTERIOR TRIM FOR FRAME WALL UNITS TO BE AZEK PROVIDED & INSTALLED BY G.C.
9. GANGED WINDOWS SHALL 3-2x4 SPACERS BETWEEN UNLESS SHOWN OTHERWISE
10. PROVIDE EGRESS HARDWARE IN EGRESS WINDOWS AS REQUIRED.
11. SEE ELEVATIONS FOR TYPICAL HEAD HEIGHTS ABOVE FINISHED SUBFLOOR
12. PROVIDE SAFETY GLASS AT ENTRIES, STAIRS, OVER BATHTUBS & ELSEWHERE AS REQUIRED BY CODE.

WINDOW SCHEDULE (DETACHED GARAGE)

400	DOUBLE HUNG	JELDWEN SITELINE	ECD2540	26 1/8"x 40 3/4"	INSULATED	SEE ELEVS. FOR GRILLE PATTERN	
401	DOUBLE HUNG	JELDWEN SITELINE	ECD3148	32 1/8"x 48 3/4"	INSULATED	SEE ELEVS. FOR GRILLE PATTERN	
402	DOUBLE HUNG	JELDWEN SITELINE	ECD2540	26 1/8"x 40 3/4"	INSULATED	SEE ELEVS. FOR GRILLE PATTERN	
403	DOUBLE HUNG	JELDWEN SITELINE	ECD3148	32 1/8"x 48 3/4"	INSULATED	SEE ELEVS. FOR GRILLE PATTERN	
404	DOUBLE HUNG	JELDWEN SITELINE	ECD3148	32 1/8"x 48 3/4"	INSULATED	SEE ELEVS. FOR GRILLE PATTERN	
405	DOUBLE HUNG	JELDWEN SITELINE	ECD3148	32 1/8"x 48 3/4"	INSULATED	SEE ELEVS. FOR	

WINDOW SCHEDULE (BASEMENT)

#	TYPE	MANUFACTURER	CAT. NO.	ROUGH OPNG.	GLASS	REMARKS	
001	CASEMENT	JELDWEN SITELINE	ECC3624	36 3/4" x 24 3/4"	INSULATED	SEE ELEVS. FOR GRILLE PATTERN	TEMPERED UNIT
002	CASEMENT	JELDWEN SITELINE	ECC3624	36 3/4" x 24 3/4"	INSULATED	SEE ELEVS. FOR GRILLE PATTERN	TEMPERED UNIT
003	DOUBLE HUNG	JELDWEN SITELINE	ECD3760	38 1/8" x 60 3/4"	INSULATED	SEE ELEVS. FOR GRILLE PATTERN	EGRESS UNIT

WINDOW SCHEDULE (FIRST FLOOR)

100	DOUBLE HUNG	JELDWEN SITELINE	ECD3372	34 1/8" x 72 3/4"	INSULATED	SEE ELEVS. FOR GRILLE PATTERN	
101	DOUBLE HUNG	JELDWEN SITELINE	ECD3372	34 1/8" x 72 3/4"	INSULATED	SEE ELEVS. FOR GRILLE PATTERN	
102	DOUBLE HUNG	JELDWEN SITELINE	ECD3372	34 1/8" x 72 3/4"	INSULATED	SEE ELEVS. FOR GRILLE PATTERN	
103	DOUBLE HUNG	JELDWEN SITELINE	ECD2172	22 1/8" x 72 3/4"	INSULATED	SEE ELEVS. FOR GRILLE PATTERN	
104	DOUBLE HUNG	JELDWEN SITELINE	ECD4572	46 1/8" x 72 3/4"	INSULATED	SEE ELEVS. FOR GRILLE PATTERN	
105	DOUBLE HUNG	JELDWEN SITELINE	ECD2172	22 1/8" x 72 3/4"	INSULATED	SEE ELEVS. FOR GRILLE PATTERN	
106	CASEMENT	JELDWEN SITELINE	ECC2454-2	48 3/4"x 54 3/4"	INSULATED	SEE ELEVS. FOR GRILLE PATTERN	
107	DOUBLE HUNG	JELDWEN SITELINE	ECD3372	34 1/8" x 72 3/4"	INSULATED	SEE ELEVS. FOR GRILLE PATTERN	
108	DOUBLE HUNG	JELDWEN SITELINE	ECD3372	34 1/8" x 72 3/4"	INSULATED	SEE ELEVS. FOR GRILLE PATTERN	
109	DOUBLE HUNG	JELDWEN SITELINE	ECD3372	34 1/8" x 72 3/4"	INSULATED	SEE ELEVS. FOR GRILLE PATTERN	
110	DOUBLE HUNG	JELDWEN SITELINE	ECD3372	34 1/8" x 72 3/4"	INSULATED	SEE ELEVS. FOR GRILLE PATTERN	
111	DOUBLE HUNG	JELDWEN SITELINE	ECC3036	30 3/4"x 36 3/4"	INSULATED	SEE ELEVS. FOR GRILLE PATTERN	
112	DOUBLE HUNG	JELDWEN SITELINE	ECC3036	30 3/4"x 36 3/4"	INSULATED	SEE ELEVS. FOR GRILLE PATTERN	
113	CASEMENT	JELDWEN SITELINE	ECC3648	36 3/4"x 48 3/4"	INSULATED	SEE ELEVS. FOR GRILLE PATTERN	
114	DOUBLE HUNG	JELDWEN SITELINE	ECD3372	34 1/8" x 72 3/4"	INSULATED	SEE ELEVS. FOR GRILLE PATTERN	

WINDOW SCHEDULE (SECOND FLOOR)

200	DOUBLE HUNG	JELDWEN SITELINE	ECD3364	34 1/8" x 64 3/4"	INSULATED	SEE ELEVS. FOR GRILLE PATTERN	EGRESS UNIT
201	DOUBLE HUNG	JELDWEN SITELINE	ECD3364	34 1/8" x 64 3/4"	INSULATED	SEE ELEVS. FOR GRILLE PATTERN	EGRESS UNIT
202	DOUBLE HUNG	JELDWEN SITELINE	ECD3364	34 1/8" x 64 3/4"	INSULATED	SEE ELEVS. FOR GRILLE PATTERN	EGRESS UNIT
203	DOUBLE HUNG	JELDWEN SITELINE	ECD3364	34 1/8" x 64 3/4"	INSULATED	SEE ELEVS. FOR GRILLE PATTERN	EGRESS UNIT
204	DOUBLE HUNG	JELDWEN SITELINE	ECD3364	34 1/8" x 64 3/4"	INSULATED	SEE ELEVS. FOR GRILLE PATTERN	EGRESS UNIT
205	DOUBLE HUNG	JELDWEN SITELINE	ECD3364	34 1/8" x 64 3/4"	INSULATED	SEE ELEVS. FOR GRILLE PATTERN	TEMPERED UNIT
206	DOUBLE HUNG	JELDWEN SITELINE	ECD3364	34 1/8" x 64 3/4"	INSULATED	SEE ELEVS. FOR GRILLE PATTERN	TEMPERED UNIT
207	DOUBLE HUNG	JELDWEN SITELINE	ECD3364	34 1/8" x 64 3/4"	INSULATED	SEE ELEVS. FOR GRILLE PATTERN	EGRESS UNIT
208	DOUBLE HUNG	JELDWEN SITELINE	ECD3364	34 1/8" x 64 3/4"	INSULATED	SEE ELEVS. FOR GRILLE PATTERN	EGRESS UNIT
209	DOUBLE HUNG	JELDWEN SITELINE	ECC3036	30 3/4"x 36 3/4"	INSULATED	SEE ELEVS. FOR GRILLE PATTERN	
210	DOUBLE HUNG	JELDWEN SITELINE	ECC3036	30 3/4"x 36 3/4"	INSULATED	SEE ELEVS. FOR GRILLE PATTERN	
211	DOUBLE HUNG	JELDWEN SITELINE	ECD3364	34 1/8" x 64 3/4"	INSULATED	SEE ELEVS. FOR GRILLE PATTERN	TEMPERED UNIT
212	DOUBLE HUNG	JELDWEN SITELINE	ECD3364	34 1/8" x 64 3/4"	INSULATED	SEE ELEVS. FOR GRILLE PATTERN	TEMPERED UNIT
213	DOUBLE HUNG	JELDWEN SITELINE	ECD3364	34 1/8" x 64 3/4"	INSULATED	SEE ELEVS. FOR GRILLE PATTERN	EGRESS UNIT

WINDOW SCHEDULE (ATTIC)

300	CASEMENT	JELDWEN SITELINE	ECC3642	36 3/4"x 42 3/4"	INSULATED	SEE ELEVS. FOR GRILLE PATTERN	
301	CASEMENT	JELDWEN SITELINE	ECC3642	36 3/4"x 42 3/4"	INSULATED	SEE ELEVS. FOR GRILLE PATTERN	
302	CASEMENT	JELDWEN SITELINE	ECC3648	36 3/4"x 48 3/4"	INSULATED	SEE ELEVS. FOR GRILLE PATTERN	TEMPERED UNIT
303	CASEMENT	JELDWEN SITELINE	ECC3642	36 3/4"x 42 3/4"	INSULATED	SEE ELEVS. FOR GRILLE PATTERN	EGRESS UNIT
304	CASEMENT	JELDWEN SITELINE	ECC3642	36 3/4"x 42 3/4"	INSULATED	SEE ELEVS. FOR GRILLE PATTERN	EGRESS UNIT
305	CASEMENT	JELDWEN SITELINE	ECC3654	36 3/4"x 54 3/4"	INSULATED	SEE ELEVS. FOR GRILLE PATTERN	
306	CASEMENT	JELDWEN SITELINE	ECC3654	36 3/4"x 54 3/4"	INSULATED	SEE ELEVS. FOR GRILLE PATTERN	

REVIEWED
By Michael Kyne at 2:13 pm, May 23, 2022

APPROVED
Montgomery County
Historic Preservation Commission

GTM ARCHITECTS

7735 OLD GEORGETOWN ROAD
SUITE 700
BETHESDA, MD 20814
(240)333-2000
(240)333-2001 FAX
WWW.GTMARCHITECTS.COM

GTM

Seal

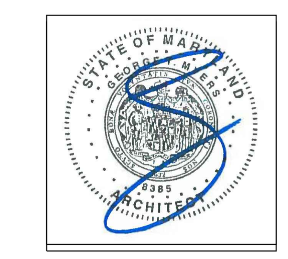

I certify that these documents were prepared or approved by me, and that I am a duly licensed architect under the laws of the State of Maryland, license number 8385, Expiration Date: 12-06-2022.

Consultant

Project
21 HIGH STREET
LOT 3

Owner

Developer

Issue Description	Date
PERMIT SET	4-11-2022

GTM Project No.	18.0320
Checked By	GTM
Drawn By	LEO/DER
Scale	AS NOTED

Sheet Title

DOOR & WINDOW SCHEDULES

Sheet No.
004

COPYRIGHT, 2022 GTM ARCHITECTS, INC.

FILE NAME:

GENERAL NOTES

1. Boundary information and two-foot contour data within noted "Limits of Topographic Survey" are based upon surveys performed by CAS Engineering, dated July, 2018.
2. The location of offsite trees, improvements and other structures beyond noted "Limits of Topographic Survey" are approximate. Offsite features are shown per available MNCPPC topographic records and are provided for illustrative purposes only.
3. Total lot area: Lot 3 =15,000 sq. ft. (0.344 ac.)
4. Property is located on Tax Map HU562 and WSSC 200' Sheet 227NW03.
5. Property is located on Montgomery County soils survey map number 14. Soil type(s): 1B, 1C, 6A & 16D. [Gaila silt loam, Baile silt loam & Brinklow-Blocktown channery silt loams] Hydrologic Soil Group "B" "C" & "D".
6. Flood zone "X" per F.E.M.A. Firm Maps, Community Panel Number 24031C0216D.
7. Property is located in the Hawlings River - Reddy Branch Watershed.
8. Water Category - 3, Sewer Category - 3
9. Local utilities include:
   Water / Sewer - Washington Suburban Sanitary Commission
   Electric - PEPCO
   Telephone - Verizon
   Gas - Washington Gas
10. Parcel 770 is located in the Town of Brookeville and the Brookeville Historic District.
11. This plan was created without the benefit of a title report.

TOWN OF BROOKEVILLE ZONING DATA

1. Zoning: Historic Village Residential (HVR)

Minimum Lot Area = 10,000 sq. ft.	Front B.R.L. = 15 ft.
Minimum Lot Width at R/W = 25 ft.	Rear B.R.L. = 40 ft. / 2 ft. (Accessory Structures)
Minimum Lot Width at B.R.L. = N/A	Side B.R.L. = 8 ft. / 2 ft. (Accessory Structures)

2. Verify main building height in accordance with the Town of Brookeville Zoning Ordinance.

Height of building from FF to highest point:	31.89 ft (31'-10 5/8" Per Arch.)
First floor elevation	445.70 ft
Height of building to highest point	31.89 ft
Elevation @ highest point	477.59 ft
Average elevation along front of building	442.80 ft

Height of building at highest point = 477.59 - 442.80 = 34.79 feet
Allowable height of building = 35 feet

Proposed height of building to highest point = 34.79 feet

3. Verify accessory building height in accordance with the Town of Brookeville Zoning Ordinance.

Height of building from FF to highest point:	19.83 ft (19'-10" Per Arch.)
First floor elevation	439.50 ft
Height of accessory building to highest point	19.83 ft
Elevation @ highest point	459.33 ft
Average elevation along front of building	438.95 ft

Height of accessory building at highest point = 459.33 - 438.95 = 20.38 feet
Allowable height of accessory building = 35 feet

Proposed height of accessory building to highest point = 20.38 feet

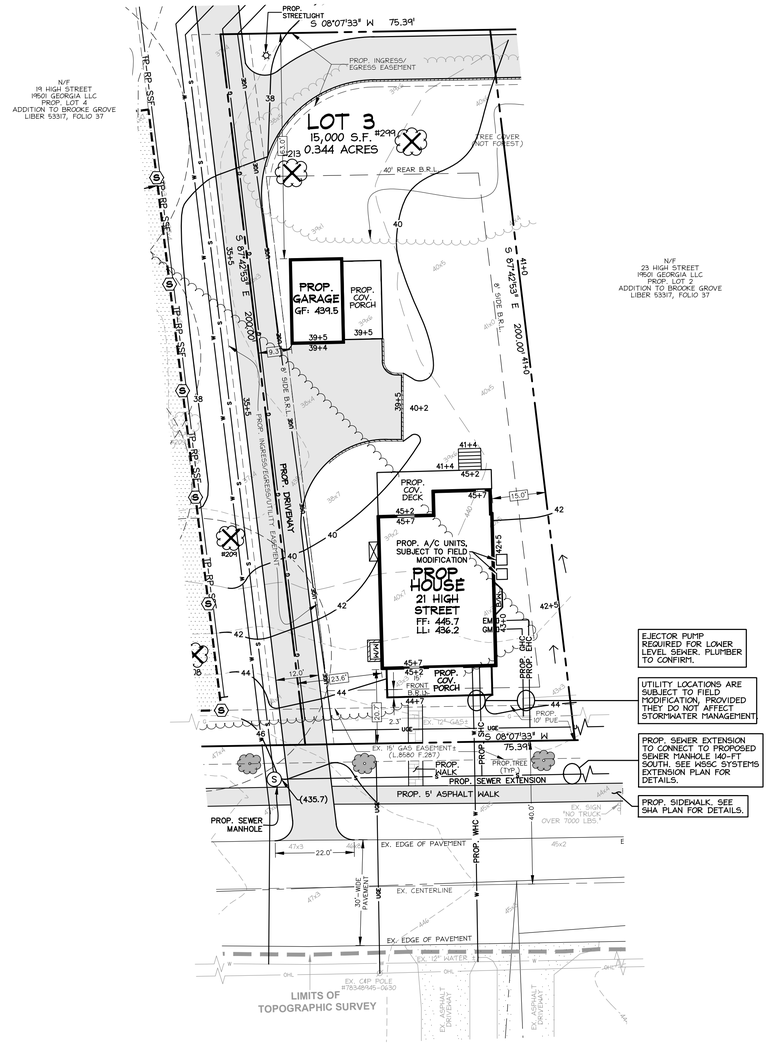

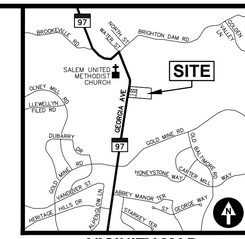

VICINITY MAP

ADC MAP 5050, GRID A-3, SCALE: 1" = 2000'

CAS JOB NO.:	16-579B
DATE:	04/2022

DATE	REVISION
04/01/22	SMF: Building Permit Site Plan to Arch for coordination.

REVIEWED
By Michael Kyne at 2:13 pm, May 23, 2022

APPROVED
Montgomery County
Historic Preservation Commission

AVERAGE GRADE (ACCESSORY BUILDING)

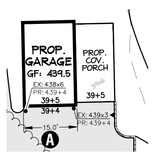

	ELEV @ POINT 1	ELEV @ POINT 2	AVERAGE GRADE	SECTION LENGTH	% LENGTH	AVERAGE GRADE x % LENGTH
Section A	438.60	439.30	438.95	15.0	100.00%	438.95

AVERAGE GRADE = 438.95

AVERAGE GRADE DETERMINATION

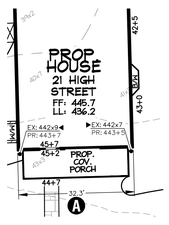

	ELEV @ POINT 1	ELEV @ POINT 2	AVERAGE GRADE	SECTION LENGTH	% LENGTH	AVERAGE GRADE x % LENGTH
Section A	442.90	442.70	442.80	32.3	100.00%	442.80

AVERAGE GRADE = 442.80

LEGEND

EXISTING FEATURES

- Ex. Sewer Manhole and Invert
- Ex. Water Line with Valve
- Ex. Gas Line with Valve
- Ex. Overhead Utility with Pole
- Ex. Two- And Ten-foot Contours
- Ex. Spot Elevation
- Ex. Canopy Line
- Ex. Tree
- Ex. Specimen Tree (DBH ≥ 30")
- Ex. Significant Tree (DBH ≥ 24")
- Ex. Tree (To Be Removed)

PROPOSED FEATURES

- Prop. Water-House Connection
- Prop. Sewer-House Connection
- Prop. Gas-House Connection
- Prop. Electric-House Connection
- Prop. Contour with Elevation
- Prop. Spot Elevation
- Prop. Surface Flow Direction
- Prop. Tree
- Prop. Streetlight

UTILITY INFORMATION

EXISTING UNDERGROUND UTILITY LOCATIONS ARE APPROXIMATE AND MUST BE FIELD VERIFIED. UTILITY LOCATIONS ARE BASED UPON AVAILABLE RECORDS AND ARE SHOWN TO THE BEST OF OUR ABILITY.

FOR LOCATION OF UTILITIES, CALL "MISS UTILITY" AT 1-800-257-7777, OR LOG ON TO WWW.MISSUTILITY.NET/ITIC 48 HOURS IN ADVANCE OF ANY WORK IN THIS VICINITY. THE EXCAVATOR MUST NOTIFY ALL PUBLIC UTILITY COMPANIES WITH UNDER GROUND FACILITIES IN THE AREA OF PROPOSED EXCAVATION AND HAVE THOSE FACILITIES LOCATED BY THE UTILITY COMPANIES PRIOR TO COMMENCING EXCAVATION. THE EXCAVATOR IS RESPONSIBLE FOR COMPLIANCE WITH REQUIREMENTS OF CHAPTER 36A OF THE MONTGOMERY COUNTY CODE.

THIS PLAN IS FOR BUILDING PERMIT APPROVAL ONLY.
SEE THE SHA DISTRICT OFFICE PERMIT PLAN FOR ADDITIONAL DETAILS.
SEE THE APPROVED SEDIMENT CONTROL PLAN FOR REQUIRED SEDIMENT CONTROL AND STORMWATER MANAGEMENT MEASURES.

CLIENT
Phillip E. Sardelis
10776 Ticker Street
Beltsville, MD 20705
philsardelis@gmail.com

ARCHITECT
GTM Architects
Attn: Luke Olson
7735 Old Georgetown Road, Suite 700
Bethesda, MD 20814
(240) 333-2021 Phone
lolson@gtmarchitects.com

21 High Street
Lot 3
Addition to Brooke Grove
Building Permit Site Plan

Lot 3, Addition to Brooke Grove
Plat Pending
Olney (8th) Election District, Montgomery County, MD

21 High Street
Brookeville, Maryland 20833

CAS ENGINEERING-MD
10 South Bentz Street
Frederick, Maryland 21701
301-607-8031 Phone
info@casengineering.com
www.casengineering.com

CAS ENGINEERING-DC, LLC
4836 MacArthur Boulevard, NW, 2nd Floor
Washington, DC 20007
202-393-7200 Phone
info@cas-dc.com
www.cas-dc.com

0 10 20 30 40
SCALE: 1 INCH = 20 FEET

SHEET TITLE:
Building Permit Site Plan

P:\2016\165798__23 High Street_Parcel 770\6 drawings\16579_BPSP_SCP_SWM.dwg, 4/1/2022 10:13:09 AM, smf, © 2022 CAS Engineering and CAS Engineering-DC, LLC

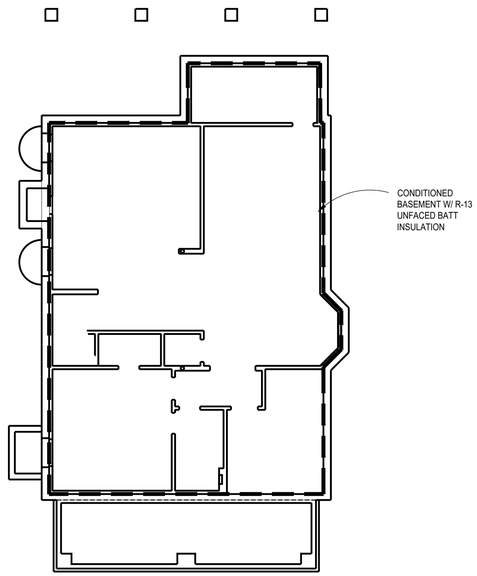

1 BASEMENT THERMAL ENVELOPE PLAN
SCALE: 1/8"=1'=0

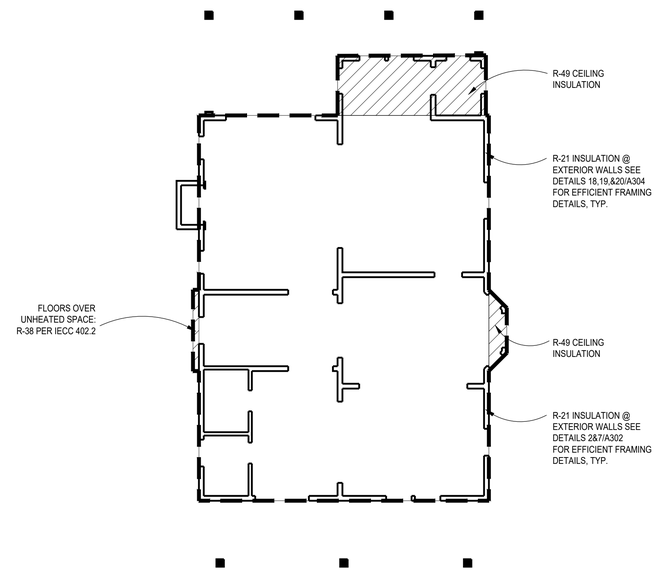

2 FIRST FLOOR THERMAL ENVELOPE PLAN
SCALE: 1/8"=1'=0

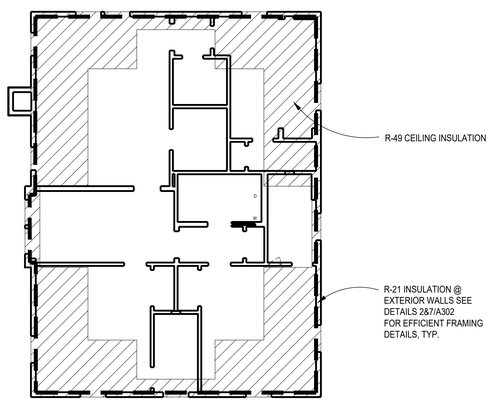

3 SECOND FLOOR THERMAL ENVELOPE PLAN
SCALE: 1/8"=1'=0

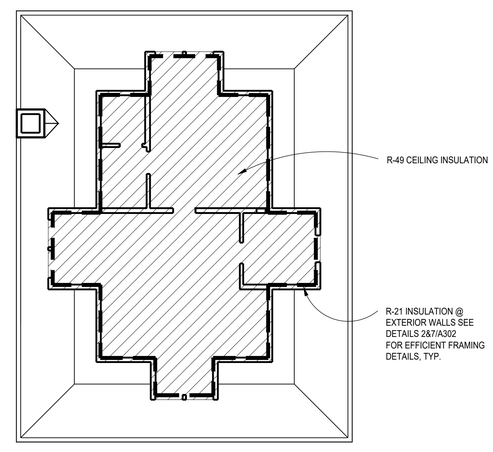

4 ATTIC THERMAL ENVELOPE PLAN
SCALE: 1/8"=1'=0

WINDOW/DOORS THERMAL DATA

THERMAL PERFORMACE DATA FOR DOORS & WINDOWS		
OPENING TYPE	U-VALUE	SHGC
CASEMENT WINDOWS	0.35	0.40
DOUBLE HUNG WINDOWS	0.35	0.40
FRENCH INSWINGING/ SLIDING DOORS	0.35	0.40
EXTERIOR SWINGING DOORS	0.35	0.40

THE AREA-WEIGHTED AVERAGE MAXIMUM FENESTRATION U-FACTOR PERMITTED USING TRADE-OFFS FROM SECTION 402.1 IN ZONE 4 SHALL BE .32 FOR VERTICAL FENESTRATION AND .55 FOR SKYLIGHTS

ENERGY CONSERVATION NOTES

1. The following provisions for thermal resistance meet or exceed the requirements stipulated by the International Energy Conservation Code.
2. INSULATION: IRC

CEILING (OF UPPERMOST STORY)	R-49 W/ 500SF R-30 ALLOWANCE, OR R-38 CONTINUOUS
VAULTED CEILING	R-38
EXTERIOR FRAME WALLS	R-20 OR 13+5 (EXTERIOR)
RIM JOISTS	EQUAL TO WALL BELOW
FLOORS OVER UNHEATED SPACES (INCLUDING FLOOR OVERHANGS)	R-38
MASONRY WALLS (ENCLOSED HEATED LIVING AREAS)	R-13 OR R-10 CONTINUOUS
SLAB ON GRADE (HEATED SPACE) 24" PERIMETER INSULATION	R-10
WINDOWS	0.32 U FACTOR, 0.40 SHGC
DOORS	SEE SECTION R402.3.4

*ALL VALUES ARE TYPICAL UNLESS NOTED OTHERWISE IN ARCHITECTURAL DRAWINGS

3. Air Infiltration:
A. Windows: not exceeding five tenths (0.5) CFM of sash crack.
B. Sliding Glass Doors: not exceeding five tenths (0.5) CFM per foot of door area.
C. Swinging Doors: not exceeding one and twenty-five hundredths (1.25) CFM per square foot of door area. Provide 1" fiberglass sill sealer between foundation wall and all sill plates.
D. In order to seal between dissimilar materials to allow for differential expansion and contraction, the following shall be caulked, gasketed, weatherstripped or otherwise sealed with an air barrier material, suitable film or solid material:

1. All joints, seams, and penetrations
2. Site-built windows, doors, and skylites
3. Openings between window and door assemblies and their respective jambs & framing
4. Utility penetrations
5. Dropped ceilings or chases adjacent to the thermal envelope
6. Knee walls
7. Walls and ceilings separating a garage from conditioned spaces
8. Behind tubs and showers on exterior walls
9. Common walls between dwelling units
10. Attic access openings
11. Rim joist junction
12. Other sources of infiltration

HVAC SYSTEMS & WATER HEATING

1. HEATING & COOLING EQUIP. CONTROLS. AT LEAST ONE PRE-PROGRAMMED PROGRAMMABLE THERMOSTAT IS REQUIRED WHEN USING A FORCED AIR SYSTEM. SEPARATE THERMOSTATS ARE REQUIRED FOR EACH HEATING/COOLING ZONE IN THE DWELLING.

2. DUCT INSULATION. SUPPLY DUCTS LOCATED OUTSIDE THE BUILDING THERMAL ENVELOPE SHALL BE INSULATED TO MINIMUM R-8, ALL OTHER DUCTS INSULATED TO A MINIMUM OF R-6

3. DUCT SEALING. ALL DUCTS, AIR HANDLERS, FILTER BOXES, & BUILDING CAVITIES MUST BE SEALED. JOINTS & SEAMS SHALL COMPLY W/ M1606.4.1 IRC

4. MECHANICAL SYSTEM PIPING INSULATION. R-3 FOR PIPING CARRYING FLUIDS AT >105°F OR <55°F IS REQUIRED

5. MECHANICAL VENTILATION. OUTDOOR AIR INTAKES OR EXHAUSTS SHALL HAVE DAMPERS

6. SERVICE WATER HEATING. PIPING IN THE CIRCULATING HOT WATER SYSTEM SHALL BE INSULATED TO AN R-3 AND SYSTEM TO INCLUDE MANUAL OR AUTOMATIC SWITCH THAT CAN TURN OFF THE SYSTEM WHEN IT IS NOT USED, WATER HEATERS WITH PIPE RISERS SHALL HAVE HEAT TRAPS ON BOTH INLET AND OUTLET OF WATER HEATER UNLESS THE WATER HEATER HAS INTEGRAL HEAT TRAPS OR IS PART OF A CIRCULATION SYSTEM. TYPICAL METHODS USED FOR CREATING HEAT TRAPS ARE "U" OR "RAMS HORN" BENDS IN THE FLEXIBLE PIPE CONNECTORS OR INSTALLING AFTERMARKET PIPE NIPPLES WITH INTEGRAL TRAPS.

7. EQUIPMENT SIZING. HEATING AND COOLING EQUIPMENT SHALL BE SIZED BASED ON BUILDING LOADS CALCULATED IN ACCORDANCE WITH ACCA (AIR CONDITIONING CONTRACTORS OF AMERICA) MANUAL-J, A SIMPLIFIED METHOD OF CALCULATING HEATING AND COOLING LOADS. THE MANUAL-J CALCULATIONS SHALL BE SUBMITTED UPON APPLICATION FOR THE MECHANICAL PERMIT.

SECTION 302.1 OF IECC SPECIFIES THE INTERIOR DESIGN TEMPERATURES USED FOR HEATING AND COOLING LOAD CALCULATIONS AS MAXIMUM OF 72°F FOR HEATINGAND MINIMUM 75°F FOR COOLING.

LEGEND

INSULATION PERIMETER

AREA OF INSULATION ABOVE OR BELOW AS INDICATED

REVIEWED
By Michael Kyne at 2:13 pm, May 23, 2022

APPROVED
Montgomery County
Historic Preservation Commission

GTM ARCHITECTS

7735 OLD GEORGETOWN ROAD
SUITE 700
BETHESDA, MD 20814
(240)333-2000
(240)333-2001 FAX
WWW.GTMARCHITECTS.COM

Seal

I certify that these documents were prepared or approved by me, and I am a duly licensed architect under the laws of the State of Maryland. License number 8085, Expiration Date: 10.06.2022.

Consultant

Project
21 HIGH STREET
LOT 3

Owner

Developer

PERMIT SET	4-11-2022

Issue Description	*Date*

GTM Project No.	18.0320
Checked By	GTM
Drawn By	LEO/DER
Scale	AS NOTED

Sheet Title
THERMAL ENERGY DIAGRAMS

Sheet No.
EC001

COPYRIGHT, 2022 GTM ARCHITECTS, INC.

FILE NAME:

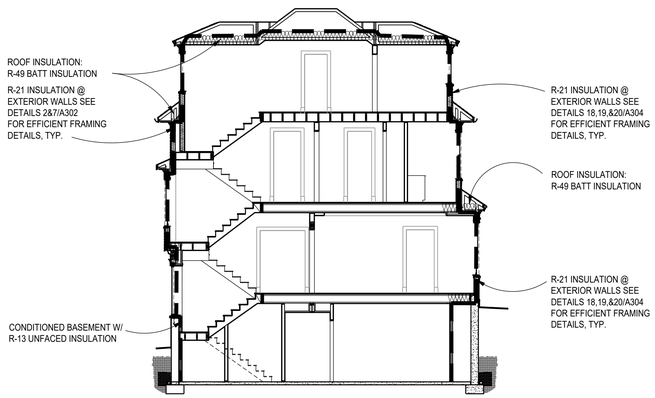

1 TYPICAL THERMAL ENVELOPE BUILDING SECTION

SCALE: 1/8"=1'=0

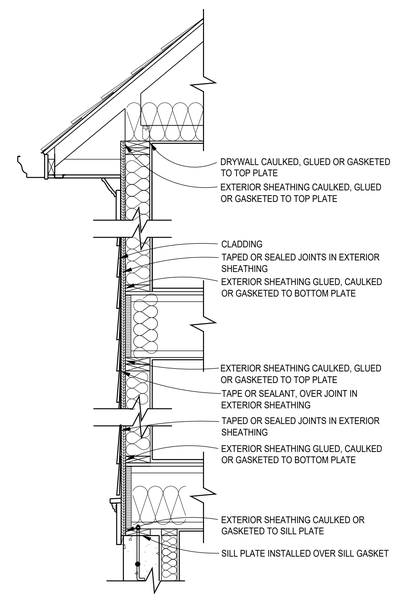

2 ENVELOPE AIR SEALING DETAIL

SCALE: 3/4"=1'-0"

*95 TOTAL SQ. FT. OF PROPOSED
R-38 CEILING/ATTIC INSULATION

500 SQ. FT ALLOWED PER IECC 402.2

WINDOW/DOORS THERMAL DATA

THERMAL PERFORMACE DATA FOR DOORS & WINDOWS		
OPENING TYPE	U-VALUE	SHGC
CASEMENT WINDOWS	0.35	0.40
DOUBLE HUNG WINDOWS	0.35	0.40
FRENCH INSWINGING/ SLIDING DOORS	0.35	0.40
EXTERIOR SWINGING DOORS	0.35	0.40

THE AREA-WEIGHTED AVERAGE MAXIMUM FENESTRATION U-FACTOR PERMITTED USING TRADE-OFFS FROM SECTION 402.1 IN ZONE 4 SHALL BE .35 FOR VERTICAL FENESTRATION AND .55 FOR SKYLITES

ENERGY CONSERVATION NOTES

1. The following provisions for thermal resistance meet or exceed the requirements stipulated by the International Energy Conservation Code.
2. INSULATION: IRC

CEILING (OF UPPERMOST STORY)	R-49 W/ 500SF R-30 ALLOWANCE, OR R-38 CONTINUOUS
VAULTED CEILING	R-38
EXTERIOR FRAME WALLS	R-20 OR 13+5 (EXTERIOR)
RIM JOISTS	EQUAL TO WALL BELOW
FLOORS OVER UNHEATED SPACES (INCLUDING FLOOR OVERHANGS)	R-38
MASONRY WALLS (ENCLOSED HEATED LIVING AREAS)	R-13 OR R-10 CONTINUOUS
SLAB ON GRADE (HEATED SPACE) 24" PERIMETER INSULATION	R-10
WINDOWS	0.32 U FACTOR, 0.40 SHGC
DOORS	SEE SECTION R402.3.4

*ALL VALUES ARE TYPICAL UNLESS NOTED OTHERWISE IN ARCHITECTURAL DRAWINGS

3. Air Infiltration:
A. Windows: not exceeding five tenths (0.5) CFM of sash crack.
B. Sliding Glass Doors: not exceeding five tenths (0.5) CFM per foot of door area.
C. Swinging Doors: not exceeding one and twenty-five hundredths (1.25) CFM per square foot of door area.
Provide 1" fiberglass sill sealer between foundation wall and all sill plates.
D. In order to seal between dissimilar materials to allow for differential expansion and contraction, the following shall be caulked, gasketed, weatherstripped or otherwise sealed with an air barrier material, suitable film or solid material:

1. All joints, seams, and penetrations
2. Site-built windows, doors, and skylites
3. Openings between window and door assemblies and their respective jambs & framing
4. Utility penetrations
5. Dropped ceilings or chases adjacent to the thermal envelope
6. Knee walls
7. Walls and ceilings separating a garage from conditioned spaces
8. Behind tubs and showers on exterior walls
9. Common walls between dwelling units
10. Attic access openings
11. Rim joist junction
12. Other sources of infiltration

HVAC SYSTEMS & WATER HEATING

1. HEATING & COOLING EQUIP. CONTROLS. AT LEAST ONE PRE-PROGRAMMED PROGRAMMABLE THERMOSTAT IS REQUIRED WHEN USING A FORCED AIR SYSTEM. SEPARATE THERMOSTATS ARE REQUIRED FOR EACH HEATING/COOLING ZONE IN THE DWELLING.

2. DUCT INSULATION. SUPPLY DUCTS LOCATED OUTSIDE THE BUILDING THERMAL ENVELOPE SHALL BE INSULATED TO MINIMUM R-8, ALL OTHER DUCTS INSULATED TO A MINIMUM OF R-6

3. DUCT SEALING. ALL DUCTS, AIR HANDLERS, FILTER BOXES, & BUILDING CAVITIES MUST BE SEALED. JOINTS & SEAMS SHALL COMPLY W/ M1606.4.1 IRC

4. MECHANICAL SYSTEM PIPING INSULATION. R-3 FOR PIPING CARRYING FLUIDS AT >105°F OR <55°F IS REQUIRED

5. MECHANICAL VENTILATION. OUTDOOR AIR INTAKES OR EXHAUSTS SHALL HAVE DAMPERS

6. SERVICE WATER HEATING. PIPING IN THE CIRCULATING HOT WATER SYSTEM SHALL BE INSULATED TO AN R-3 AND SYSTEM TO INCLUDE MANUAL OR AUTOMATIC SWITCH THAT CAN TURN OFF THE SYSTEM WHEN IT IS NOT USED, WATER HEATERS WITH PIPE RISERS SHALL HAVE HEAT TRAPS ON BOTH INLET AND OUTLET OF WATER HEATER UNLESS THE WATER HEATER HAS INTEGRAL HEAT TRAPS OR IS PART OF A CIRCULATION SYSTEM. TYPICAL METHODS USED FOR CREATING HEAT TRAPS ARE "U" OR "RAMS HORN" BENDS IN THE FLEXIBLE PIPE CONNECTORS OR INSTALLING AFTERMARKET PIPE NIPPLES WITH INTEGRAL TRAPS.

7. EQUIPMENT SIZING. HEATING AND COOLING EQUIPMENT SHALL BE SIZED BASED ON BUILDING LOADS CALCULATED IN ACCORDANCE WITH ACCA (AIR CONDITIONING CONTRACTORS OF AMERICA) MANUAL-J. A SIMPLIFIED METHOD OF CALCULATING HEATING AND COOLING LOADS. THE MANUAL-J CALCULATIONS SHALL BE SUBMITTED UPON APPLICATION FOR THE MECHANICAL PERMIT.

SECTION 302.1 OF IECC SPECIFIES THE INTERIOR DESIGN TEMPERATURES USED FOR HEATING AND COOLING LOAD CALCULATIONS AS MAXIMUM OF 72°F FOR HEATINGAND MINIMUM 75°F FOR COOLING.

LEGEND

INSULATION PERIMETER

AREA OF INSULATION ABOVE OR BELOW AS INDICATED

REVIEWED
By Michael Kyne at 2:13 pm, May 23, 2022

APPROVED
Montgomery County
Historic Preservation Commission

GTM ARCHITECTS

7735 OLD GEORGETOWN ROAD
SUITE 700
BETHESDA, MD 20814
(240)333-2000
(240)333-2001 FAX
WWW.GTMARCHITECTS.COM

Seal

I certify that these documents were prepared or approved by me, and that I am a duly licensed architect under the laws of the State of Maryland. License number 8888, Expiration Date: 01.06.2023.

Consultant

Project

21 HIGH STREET
LOT 3

Owner

Developer

PERMIT SET	4-11-2022
Issue Description	*Date*

GTM Project No.	18.0320
Checked By	GTM
Drawn By	LEO/DER
Scale	AS NOTED

Sheet Title

THERMAL ENERGY DIAGRAMS

Sheet No.

EC002

COPYRIGHT, 2022 GTM ARCHITECTS, INC.

Generated by RES*check-Web* Software

Compliance Certificate

Project Parcel 770, Lot C

Energy Code:	**2018 IECC**
Location:	**Brookeville, Maryland**
Construction Type:	**Single-family**
Project Type:	**New Construction**
Conditioned Floor Area:	**4,792 ft2**
Glazing Area	**19%**
Climate Zone:	**4 (5093 HDD)**
Permit Date:	
Permit Number:	

Construction Site:
Parcel 770
Lot C
Brookeville, MD

Owner/Agent:
Phil Sardelis
10776 Tucker Street
Beltsville, MD 20705
240-417-5333
philsardelis@gmail.com

Designer/Contractor:
Luke Olson
GTM Architects
7735 Old Georgetown Road
Bethesda, MD 20814
240-333-2021
lolson@gtmarchitects.com

Compliance: Passes using UA trade-off

Compliance: **2.7% Better Than Code** Maximum UA: **448** Your UA: **436** Maximum SHGC: **0.40** Your SHGC: **0.23**

The % Better or Worse Than Code Index reflects how close to compliance the house is based on code trade-off rules.
It DOES NOT provide an estimate of energy use or cost relative to a minimum-code home.

Envelope Assemblies

Assembly	Gross Area or Perimeter	Cavity R-Value	Cont. R-Value	Prop. U-Factor	Req. U-Factor	Prop. UA	Req. UA
Ceiling: Flat Ceiling or Scissor Truss	1,390	49.0	0.0	0.026	0.026	36	36
Wall: Wood Frame, 16" o.c.	1,530	20.0	0.0	0.059	0.060	70	71
Door: Glass Door (over 50% glazing) SHGC: 0.23	132			0.310	0.320	41	42
Window: Wood Frame SHGC: 0.23	208			0.310	0.320	64	67
Wall 1: Wood Frame, 16" o.c.	1,395	20.0	0.0	0.059	0.060	71	72
Window 1: Wood Frame SHGC: 0.23	198			0.310	0.320	61	63
Basement: Solid Concrete or Masonry Wall height: 8.8' Depth below grade: 7.8' Insulation depth: 8.8'	1,518	13.0	0.0	0.057	0.059	85	88
Window: Wood Frame SHGC: 0.23	27			0.310	0.320	8	9

Project Title: Parcel 770, Lot C
Data filename:

Report date: 08/20/21
Page 1 of 2

2018 IECC Energy Efficiency Certificate

Insulation Rating	R-Value
Above-Grade Wall	20.00
Below-Grade Wall	13.00
Floor	0.00
Ceiling / Roof	49.00
Ductwork (unconditioned spaces):	_____

Glass & Door Rating	U-Factor	SHGC
Window	0.31	0.23
Door	0.31	0.23

Heating & Cooling Equipment	Efficiency
Heating System:_____	_____
Cooling System:_____	_____
Water Heater:_____	_____

Name: _____ Date:_____

Comments

REVIEWED
By Michael Kyne at 2:13 pm, May 23, 2022

APPROVED
Montgomery County
Historic Preservation Commission

GTM ARCHITECTS

7735 OLD GEORGETOWN ROAD
SUITE 700
BETHESDA, MD 20814
(240)333-2000
(240)333-2001 FAX
WWW.GTMARCHITECTS.COM

Seal

I certify that these documents were prepared or approved by me, and that I am a duly licensed architect under the laws of the State of Maryland, license number 8385, Expiration Date: 12-06-2022.

Consultant

Project
21 HIGH STREET
LOT 3

Owner

Developer

PERMIT SET	4-11-2022
Issue Description	Date

GTM Project No.	18.0320
Checked By	GTM
Drawn By	LEO/DER
Scale	AS NOTED

Sheet Title
ENERGY CALCS

Sheet No.
EC003

COPYRIGHT, 2022 GTM ARCHITECTS, INC.

FILE NAME:

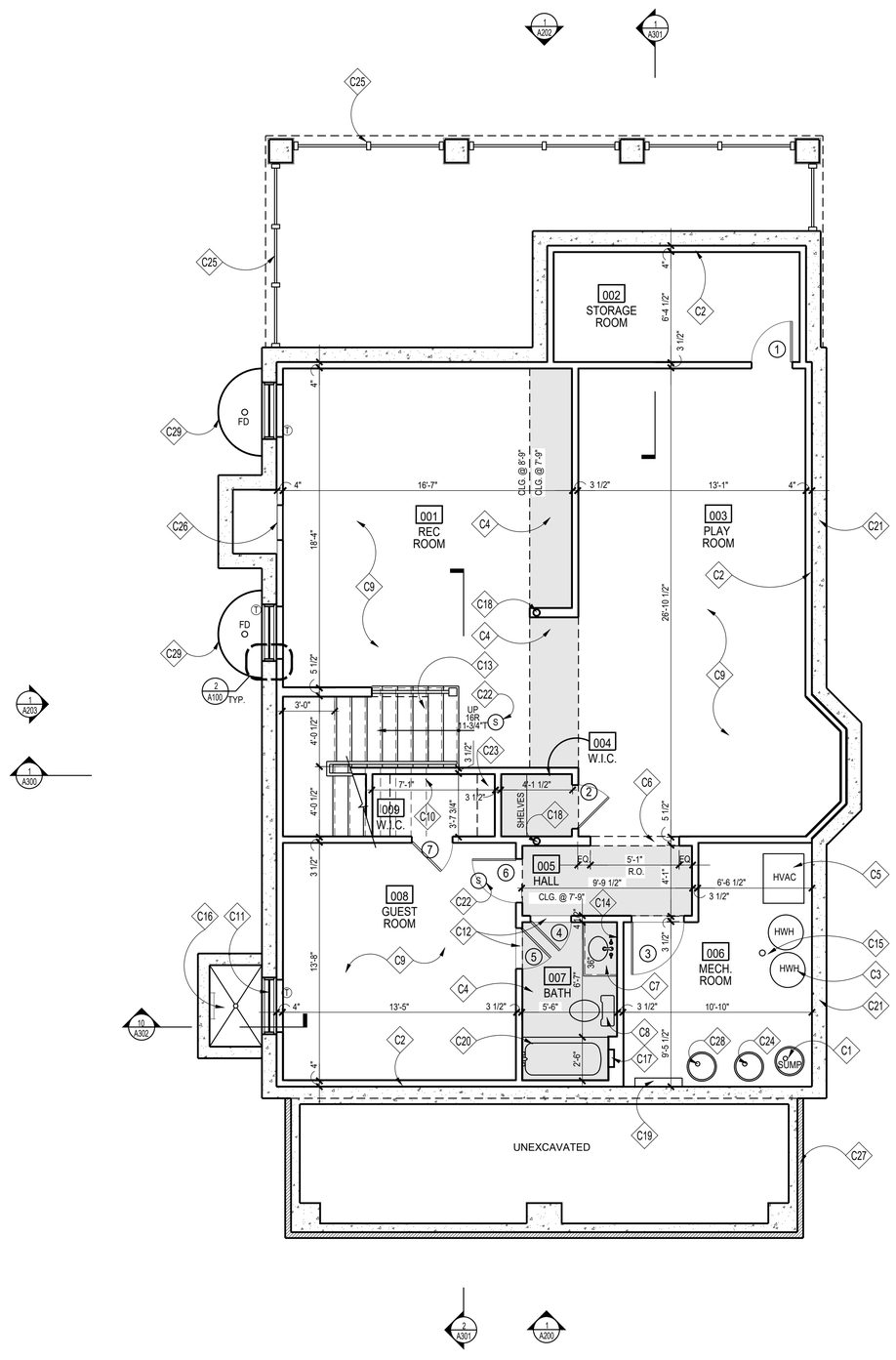

1 BASEMENT PLAN
SCALE: 1/4"=1'=0

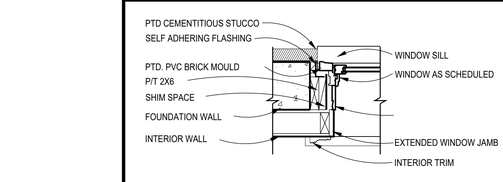

2 TYP. BASEMENT WINDOW/DOOR JAMB
Scale: 1"=1'-0"

WALL TYPES

TYPICAL NEW EXTERIOR WALL: 10" CONC. WALL; SEE FOUNDATION PLAN; FUR WHERE SHOWN WITH 2x4 STUDS @ 16" O.C.,
(SEE THERMAL ENVELOPE, SHEET "EC001" FOR INSULATION INFORMATION)

TYPICAL NON-BEARING INTERIOR PARTITION: 2"x4" STUDS 16" O.C. W/ ½" GYP. BD. EACH SIDE; INCREASE WALL THICKNESS AS SHOWN TO ALIGN FINISHES WHERE SHOWN

CONSTRUCTION NOTES

- C1 SUMP PUMP WITH BATTERY POWERED SUMP BACKUP; LOCATION T.B.D.
- C2 FUR OUT WALLS W/ FULL 2x4's W/ R-13 BATT INSULATION, TYP.; PROVIDE P.T. SILL; HOLD 1/2" OFF MASONRY WALL
- C3 HOT WATER HEATER, LOCATION APPROXIMATE, SEE SHEET '002'
- C4 TONED AREA INDICATES LOWERED CEILING TO ALLOW FOR DUCTWORK, BEAMS AND/OR AESTHETIC APPEAL
- C5 HVAC, SEE SHEET '002'
- C6 CASED OPENING @ 6'-8" FINISHED
- C7 VANITY W/ SINK, FAUCET & COUNTERTOP; T.B.S.
- C8 PLUMBING FIXTURES & ACCESSORIES T.B.S.
- C9 REINF. CONC. SLAB ON GRADE; SEE FOUNDATION PLAN
- C10 PROVIDE CLOSET ROD & SHELF
- C11 EGRESS WINDOW; MAX. 44" SILL HEIGHT FROM A.F.F.
- C12 MARBLE THRESHOLD T.B.S.
- C13 WD. STEPS; 1x RISERS W/ TREADS TO MATCH H.W.F.; WOOD RAILING T.B.S, SEE DETAILS '1, 6/A302', FOLLOW IRC 2018 R311.7 FOR STAIR AND RAILING
- C14 1/4" POLISHED PLATE GLASS MIRROR, T.B.S.
- C15 DRAIN FOR HWH & HVAC. LOCATION T.B.D., RUN TO SUMP PUMP
- C16 WINDOW WELL; EGRESS LADDER & COVER AS REQ'D. BY CODE DRAIN TO SUMP PUMP OR DAYLIGHT
- C17 12" W x 14" H TILED RECESS w/ SLOPED SILL @ 42" A.F.F.
- C18 STEEL COLUMN, SEE FOUNDATION AND FRAMING PLANS
- C19 APPROXIMATE ELECTRICAL PANEL LOCATION; FIELD VERIFY FINAL LOCATION
- C20 TUB & SHOWER FLOORS AND WALLS SHALL BE FINISHED W/ A NON-ABSORBENT SURFACE AT LEAST 6" ABOVE THE FLOOR, PER IRC 2018
- C21 TONED WALL INDICATES EXTENT OF REVERSE LEDGE; SEE FOUNDATION & FRAMING PLANS
- C22 INSTALL INTERCONNECTED & HARD-WIRED SMOKE DETECTORS/ SMOKE & CARBON MONOXIDE DETECTORS IN ACCORDANCE W/ IRC 2018
- C23 (5) EQUALLY SPACED SHELVES, FLOOR TO CEILING, PTD.
- C24 RADON MITIGATION PIPE, SEE SPECIFICATIONS SHEET FOR DETAILS
- C25 PTD. CEDAR LATTICE PANEL TO MATCH EXG., SEE DETAIL 5/A304
- C26 ACCESS PANEL PER IRC 2018
- C27 STONE VENEER TBS, SEE ELEVATIONS
- C28 EJECTOR PUMP PER CIVIL
- C29 PREFABRICATED WINDOW WELL, PROVIDE GRAVEL BASE AND DRAIN TO SUMP OR DAYLIGHT

NOTE:

1. UNLESS INDICATED OTHERWISE, DIMENSIONS ARE TO FACE OF FRAMING
2. VERIFY ALL EXTERIOR RISER + TREAD DIMENSIONS IN THE FIELD
3. SEE DETAILS '2&7/A302' FOR ENERGY EFFICIENT FRAMING DETAILS
4. PROVIDE MINERAL WOOL SOUND INSULATION IN WALLS, CEILING, + FLOOR OF THE FOLLOWING ROOMS (U.N.O.):
   - 006 MECHANICAL ROOM
   - 007 BATH
5. Ⓣ = TEMPERED GLASS

PLAN NORTH

REVIEWED
By Michael Kyne at 2:13 pm, May 23, 2022

APPROVED
Montgomery County
Historic Preservation Commission

GTM ARCHITECTS

7735 OLD GEORGETOWN ROAD
SUITE 700
BETHESDA, MD 20814
(240)333-2000
(240)333-2001 FAX
WWW.GTMARCHITECTS.COM

Seal

I certify that these documents were prepared or approved by me, and I am a duly licensed architect under the laws of the State of Maryland. Exp. Date: 10/30/2022. License Number: 8088.

Consultant

Project
21 HIGH STREET LOT 3

Owner

Developer

PERMIT SET	4-11-2022

Issue Description	*Date*

GTM Project No.	18.0320
Checked By	GTM
Drawn By	LEO/DER
Scale	AS NOTED

Sheet Title
BASEMENT PLAN

Sheet No.
A100

COPYRIGHT, 2022 GTM ARCHITECTS, INC.

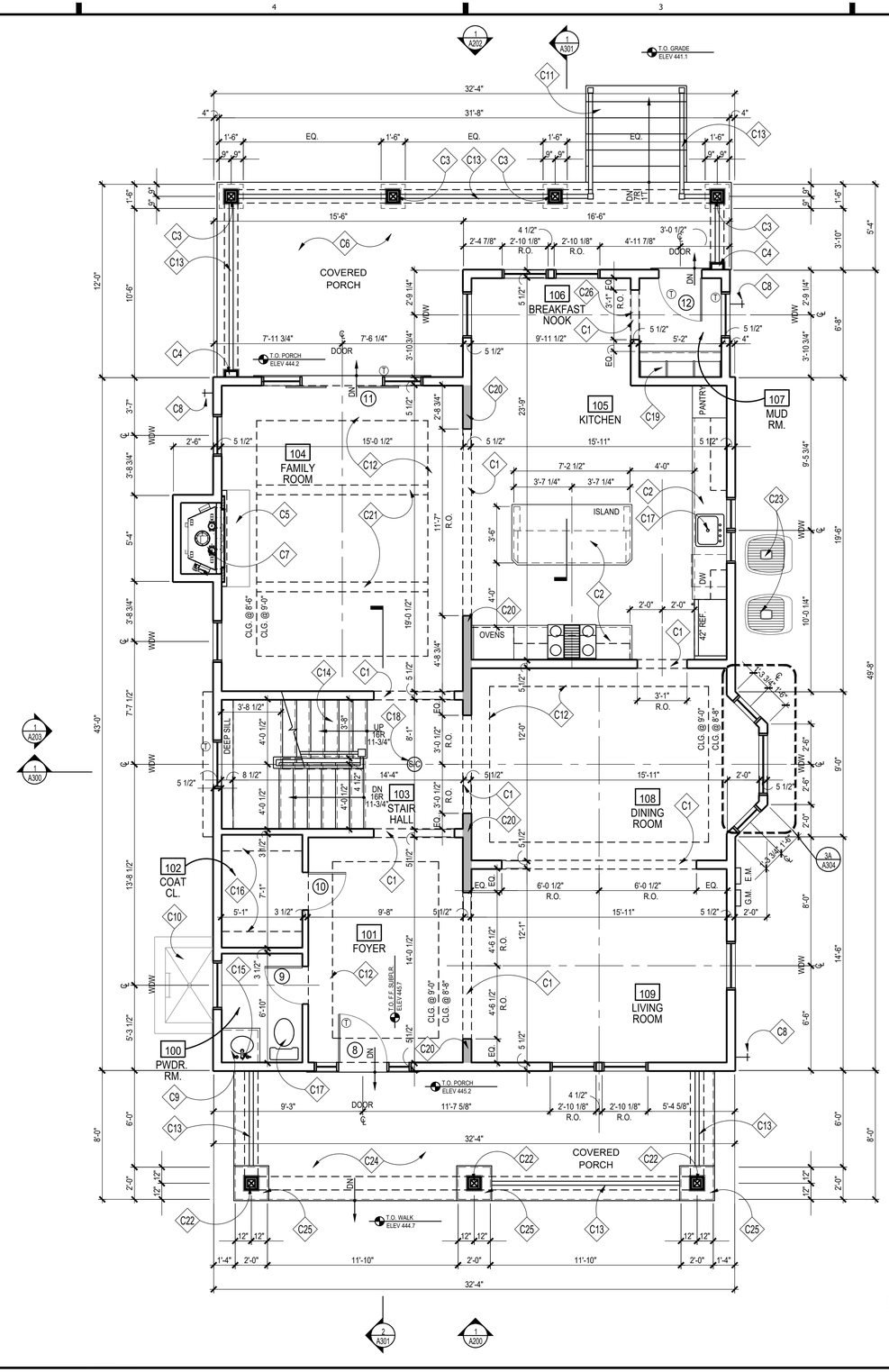

1 FIRST FLOOR PLAN
SCALE: 1/4"=1'=0

PLAN NORTH

CONSTRUCTION NOTES

- C1 CASED OPENING @ 8'-0" FINISHED
- C2 KITCHEN CABINETS, APPLIANCES + COUNTER TOPS, ETC. T.B.S.
- C3 SQUARE COLUMN, BUILT UP FROM 2x10's, PTD. (WRAP 6x6 POST) OR 10" SQ. HB&G PERMACAST COLUMN CUT FROM 9'-0" STOCK W/ TUSCAN BASE AND CAPITAL
- C4 PTD. PILASTER TO MATCH COLUMNS; SEE ELEVATIONS
- C5 HEARTH, MATERIAL T.B.S.
- C6 COMPOSITE DECKING MATERIAL, STYLE/COLOR T.B.S.
- C7 B-VENT GAS FIREPLACE, T.B.S. INSTALL PER MANUFACTURER REQUIREMENTS
- C8 FROST PROOF HOSE BIB BELOW; CONFIRM LOCATION
- C9 PEDESTAL SINK, T.B.S.
- C10 EGRESS WINDOW WELL W/ HINGED GRATE; SEE DETAIL '10/A302'
- C11 COMPOSITE TREADS, T.B.S., F.V. RISE/RUN
- C12 OPTIONAL TRAY CEILING ABOVE, SEE PLAN FOR HEIGHTS
- C13 PROVIDE HANDRAIL/GUARDRAIL TO COMPLY W/ IRC 2018
- C14 WD. STEPS; 1x RISERS W/ TREADS TO MATCH H.W.F.; WOOD RAILING T.B.S, SEE DETAILS '1,6/A302', FOLLOW IRC 2018 FOR STAIR AND RAILING
- C15 1/4" POLISHED PLATE GLASS MIRROR, T.B.S.
- C16 PROVIDE CLOSET ROD & SHELF
- C17 PLUMBING FIXTURES & ACCESSORIES T.B.S.
- C18 HARD-WIRED SMOKE DETECTOR/CARBON MONOXIDE COMBO UNIT PER IRC 2018
- C19 BUILT-IN BENCH W/ LOCKERS & HOOKS; SEE TYP DETAIL ON '10/A303'
- C20 DARKER TONED WALL INDICATES 2x6 LOAD BEARING WALL @ 16" O.C.
- C21 OPTIONAL BEAMS ABOVE, T.B.D.
- C22 TAPERED SQ. HB&G PERMACAST COLUMN W/ TUSCAN BASE AND CAPITAL
- C23 CONDENSOR UNIT LOCATION APPROXIMATE
- C24 FLAGSTONE @ PORCH, T.B.S
- C25 BRICK PIER W/ SLOPED STONE CAP BELOW
- C26 MARBLE THRESHOLD, T.B.S.; SEE DETAIL '5/A302'

NOTE:

1. UNLESS INDICATED OTHERWISE, DIMENSIONS ARE TO FACE OF FRAMING
2. VERIFY ALL EXTERIOR RISER + TREAD DIMENSIONS IN THE FIELD
3. SEE DETAILS '2&7/A302' FOR ENERGY EFFICIENT FRAMING DETAILS
4. PROVIDE MINERAL WOOL SOUND INSULATION IN WALLS, CEILING, + FLOOR OF THE FOLLOWING ROOMS (U.N.O.):
   100 POWDER ROOM
5. (T) = TEMPERED GLASS

WALL TYPES

TYPICAL NEW EXTERIOR WALL: 2x6 WOOD STUDS 16" O.C., W/ INSULATION (SEE THERMAL ENVELOPE, SHEET "EC001" FOR INSULATION LOCATION & INFORMATION) W/ ½" EXTERIOR SHEATHING, AIR & WATER RESISTIVE BUILDING WRAP, & SIDING; SEE ELEVATIONS. INTERIOR FINISH TO BE ½" GYP. BD.

TYPICAL NON-BEARING INTERIOR PARTITION: U.N.O. 2x4 WOOD STUDS 16" O.C. W/ ½" GYP. BD. EACH SIDE, INCREASE WALL THICKNESS AS SHOWN TO ALIGN FINISHES WHERE SHOWN

REVIEWED
By Michael Kyne at 2:13 pm, May 23, 2022

APPROVED
Montgomery County
Historic Preservation Commission

GTM ARCHITECTS
7735 OLD GEORGETOWN ROAD
SUITE 700
BETHESDA, MD 20814
(240)333-2000
(240)333-2001 FAX
WWW.GTMARCHITECTS.COM

Seal

I certify that these documents were prepared or approved by me, and that I am a duly licensed architect under the laws of the State of Maryland. Exp. Date: 10.06.2022 Seal: 12345

Consultant

Project
21 HIGH STREET
LOT 3

Owner

Developer

PERMIT SET	4-11-2022

Issue Description	*Date*

GTM Project No.	18.0320
Checked By	GTM
Drawn By	LEO/DER
Scale	AS NOTED

Sheet Title
FIRST FLOOR PLAN

Sheet No.
A101

COPYRIGHT, 2022 GTM ARCHITECTS, INC.

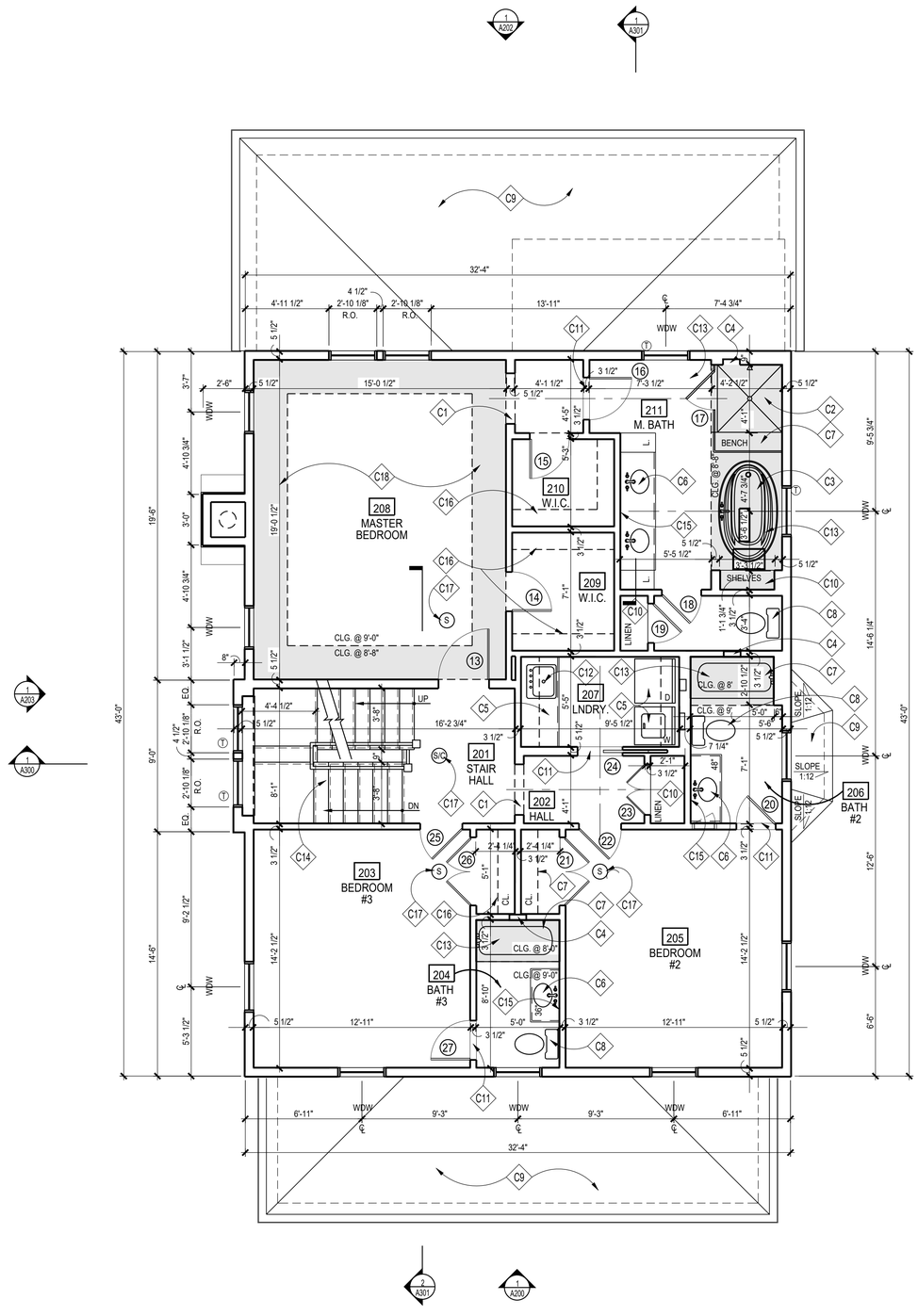

1 SECOND FLOOR PLAN
SCALE: 1/4"=1'=0

PLAN NORTH

CONSTRUCTION NOTES

- C1 CASED OPENING @ 7'-0" FINISHED
- C2 TILED SHOWER AND TILED BENCH; REFER TO DETAIL '16,17/A302', W/ TEMPERED GLASS ENCLOSURE & DOOR
- C3 SOAKING TUB WITHIN BUILT-IN DECK, T.B.S.
- C4 12" W x 14" H TILED RECESS w/ SLOPED SILL @ 42" A.F.F.
- C5 LAUNDRY ROOM CABINETS, APPLIANCES + COUNTER TOPS, ETC. T.B.S.; PROVIDE OVERFLOW PAN AND DRAIN UNDER WASHER
- C6 VANITY W/ SINK, FAUCET & COUNTERTOP; T.B.S.
- C7 TUB & SHOWER FLOORS AND WALLS SHALL BE FINISHED W/ A NON-ABSORBENT SURFACE AT LEAST 6" ABOVE THE FLOOR, PER IRC 2018
- C8 PLUMBING FIXTURES & ACCESSORIES T.B.S.
- C9 ROOF BELOW; SEE ROOF PLAN
- C10 PROVIDE (5) EQUALLY SPACED SHELEVES, PTD.
- C11 MARBLE THRESHOLD, T.B.S.; SEE DETAIL '5/A302'
- C12 OPTIONAL LAUNDRY SINK, T.B.S.
- C13 TONED AREA INDICATES LOWERED CEILING FOR AESTHETIC OR STRUCTURAL PURPOSES
- C14 WD. STEPS; 1x RISERS W/ TREADS TO MATCH H.W.F.; WOOD RAILING T.B.S, SEE DETAILS '1,6/A302', FOLLOW IRC 2018 FOR STAIR AND RAILING
- C15 1/4" POLISHED PLATE GLASS MIRROR, T.B.S.
- C16 PROVIDE CLOSET ROD & SHELF
- C17 HARD-WIRED SMOKE DETECTOR/CARBON MONOXIDE COMBO UNIT PER IRC 2018
- C18 OPTIONAL TRAY CEILING ABOVE, SEE PLAN FOR HEIGHTS

NOTE:

1. UNLESS INDICATED OTHERWISE, DIMENSIONS ARE TO FACE OF FRAMING
2. SEE DETAILS '2&7/A302' FOR ENERGY EFFICIENT FRAMING DETAILS
3. PROVIDE MINERAL WOOL SOUND INSULATION IN WALLS, CEILING, + FLOOR OF THE FOLLOWING ROOMS (U.N.O.):
   207 LAUNDRY ROOM
   211 MASTER BATH
   206 BATH #2
   204 BATH #3
4. Ⓣ = TEMPERED GLASS

WALL TYPES

TYPICAL NEW EXTERIOR WALL; 2x6 WOOD STUDS 16" O.C., W/ INSULATION (SEE THERMAL ENVELOPE, SHEET "EC001" FOR INSULATION LOCATION & INFORMATION) W/ , ½" EXTERIOR SHEATHING, AIR & WATER RESISTIVE BUILDING WRAP, & SIDING; SEE ELEVATIONS. INTERIOR FINISH TO BE ½" GYP. BD.

TYPICAL NON-BEARING INTERIOR PARTITION; U.N.O. 2x4 WOOD STUDS 16" O.C. W/ ½" GYP. BD. EACH SIDE, INCREASE WALL THICKNESS AS SHOWN TO ALIGN FINISHES WHERE SHOWN

REVIEWED
By Michael Kyne at 2:13 pm, May 23, 2022

APPROVED
Montgomery County
Historic Preservation Commission

GTM ARCHITECTS

7735 OLD GEORGETOWN ROAD
SUITE 700
BETHESDA, MD 20814
(240)333-2000
(240)333-2001 FAX
WWW.GTMARCHITECTS.COM

Seal

I certify that these documents were prepared or approved by me, and that I am a duly licensed architect under the laws of the State of Maryland, license number 8385, Expiration Date: 12-06-2022.

Consultant

Project
21 HIGH STREET
LOT 3

Owner

Developer

Issue Description	Date
PERMIT SET	4-11-2022

GTM Project No.	18.0320
Checked By	GTM
Drawn By	LEO/DER
Scale	AS NOTED

Sheet Title
SECOND FLOOR PLAN

Sheet No.
A102

COPYRIGHT, 2022 GTM ARCHITECTS, INC.

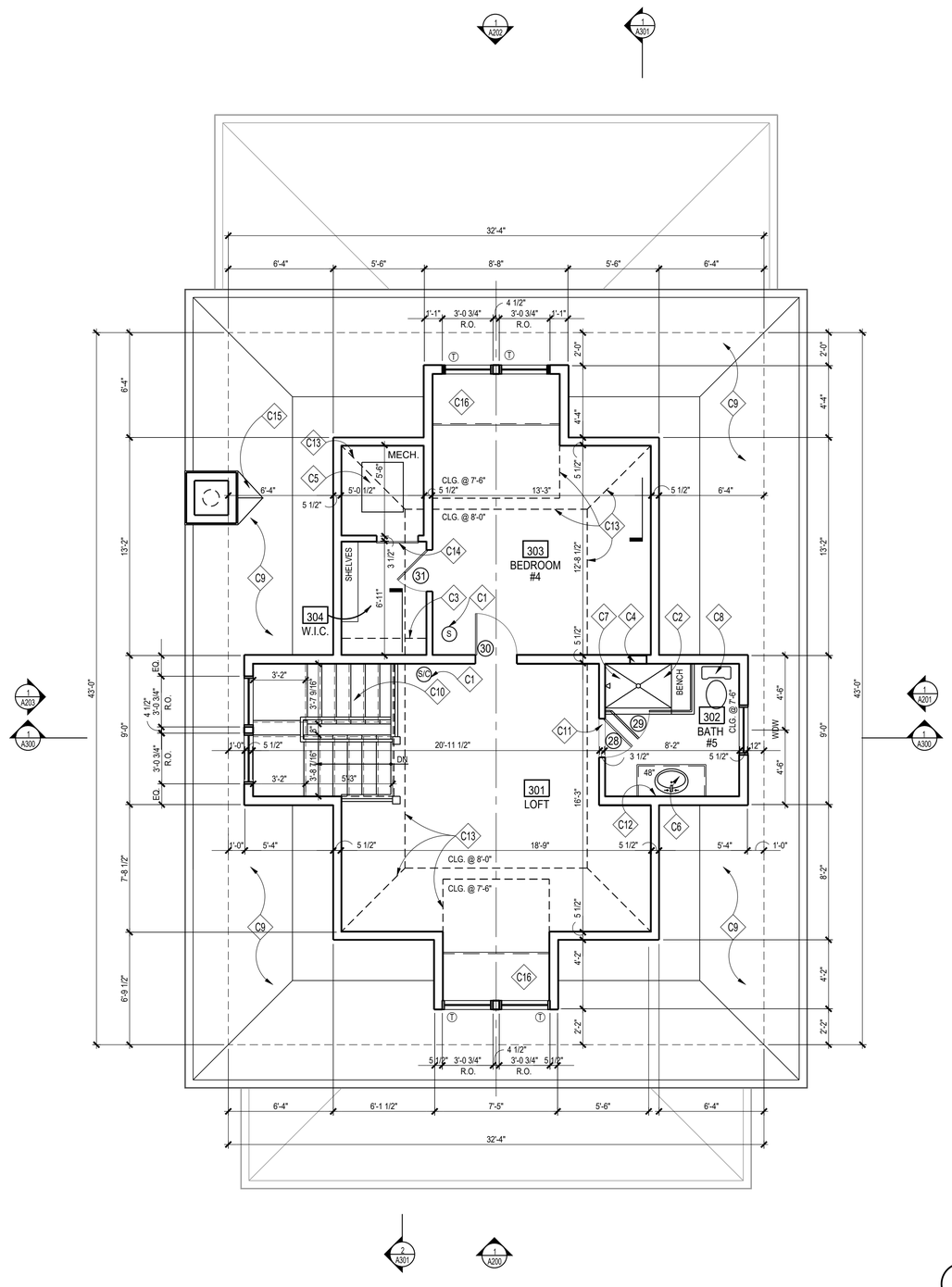

1 ATTIC PLAN
SCALE: 1/4"=1'=0

PLAN NORTH

CONSTRUCTION NOTES

- C1 HARD-WIRED SMOKE DETECTOR/CARBON MONOXIDE COMBO UNIT PER IRC 2018
- C2 TILED SHOWER; REFER TO DETAIL '16,17/A302', W/ TEMPERED GLASS ENCLOSURE & DOOR
- C3 PROVIDE CLOSET ROD & SHELF
- C4 12" W x 14" H TILED RECESS w/ SLOPED SILL @ 42" A.F.F. VERIFY IF IF RECESS CONFLICTS WITH GIRDER TRUSS
- C5 HVAC, SEE SHEET '002'
- C6 VANITY W/ SINK, FAUCET & COUNTERTOP; T.B.S.
- C7 TUB & SHOWER FLOORS AND WALLS SHALL BE FINISHED W/ A NON-ABSORBENT SURFACE AT LEAST 6" ABOVE THE FLOOR, PER IRC 2018
- C8 PLUMBING FIXTURES & ACCESSORIES T.B.S.
- C9 ROOF BELOW; SEE ROOF PLAN
- C10 WD. STEPS; 1x RISERS W/ TREADS TO MATCH H.W.F.; WOOD RAILING T.B.S, SEE DETAILS '1,6/A302', FOLLOW IRC 2018 FOR STAIR AND RAILING
- C11 MARBLE THRESHOLD, T.B.S.; SEE DETAIL '5/A302'
- C12 1/4" POLISHED PLATE GLASS MIRROR, T.B.S.
- C13 SLOPED CEILING ABOVE
- C14 ACCESS PANEL TO HVAC ROOM, F.V. HEIGHT
- C15 METAL CRICKET PER IRC. MIN 4:12 SLOPE
- C16 BUILT-IN BENCH SEAT, SEE 8/A305

NOTE:

1. UNLESS INDICATED OTHERWISE, DIMENSIONS ARE TO FACE OF FRAMING
2. SEE DETAILS '18-20/A304' FOR ENERGY EFFICIENT FRAMING DETAILS
3. PROVIDE MINERAL WOOL SOUND INSULATION IN WALLS, CEILING, + FLOOR OF THE FOLLOWING ROOMS (U.N.O.):
   MECHANICAL CLOSET
   BATH #5
4. Ⓣ = TEMPERED GLASS

REVIEWED
By Michael Kyne at 2:13 pm, May 23, 2022

APPROVED
Montgomery County
Historic Preservation Commission

GTM ARCHITECTS

7735 OLD GEORGETOWN ROAD
SUITE 700
BETHESDA, MD 20814
(240)333-2000
(240)333-2001 FAX
WWW.GTMARCHITECTS.COM

Seal

I certify that these documents were prepared or approved by me, and that I am a duly licensed architect under the laws of the State of Maryland, license number 8385, Expiration Date: 12-06-2022.

Consultant

Project
21 HIGH STREET
LOT 3

Owner

Developer

PERMIT SET	4-11-2022
Issue Description	*Date*

GTM Project No.	18.0320
Checked By	GTM
Drawn By	LEO/DER
Scale	AS NOTED

Sheet Title
ATTIC PLAN

Sheet No.
A103

COPYRIGHT, 2022 GTM ARCHITECTS, INC.

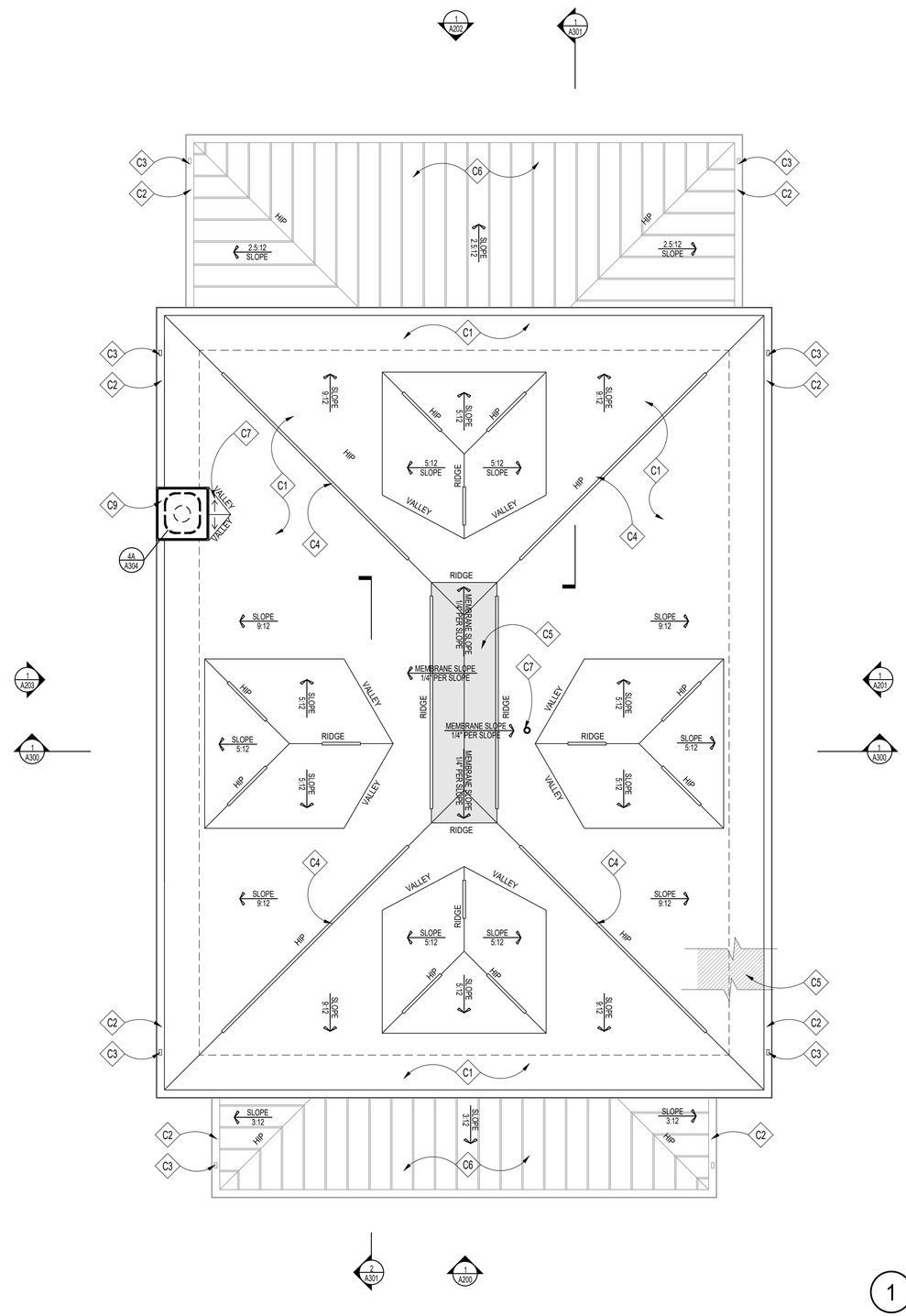

1 ROOF PLAN
SCALE: 1/4"=1'=0

PLAN NORTH

ROOFING NOTES

- C1 ROOF SHINGLES, COLOR AND STYLE T.B.S.
- C2 OGEE GUTTER T.B.S., TYP.
- C3 OGEE DOWNSPOUT T.B.S., TYP.
- C4 RIDGE/HIP VENTS BY COR-A-VENT OR APP'D EQUAL ELIMINATE WITH THE USE OF FOAM INSULATION
- C5 SEE NOTE #1 UNDER GENERAL ROOFING NOTES, TYP.
- C6 STANDING SEAM METAL ROOF BELOW, T.B.S.
- C7 RADON MITIGATION PIPE, SEE SPECIFICATIONS SHEET FOR DETAILS
- C8 RADON MITIGATION PIPE, SEE SPECIFICATIONS SHEET FOR DETAILS
- C9 STUCCO CHIMNEY FOR PRE-FABRICATED FIREPLACE W/ B-VENT FLUE & HIGH WIND TERMINATION CAP WITHIN DECORATIVE MTL. CHIMNEY POT TBS, SEE DETAIL 9/A302, CHIMNEY TO EXTEND 24" ABOVE ROOF WITHIN 10' PER IRC 2018

GENERAL ROOFING NOTES

1. PROVIDE SELF-ADHERING, 40 MIL ICE AND WATER GUARD UNDERLAYMENT UNDER SHINGLES AT ALL VALLEYS AND FROM LOWEST EDGE OF ROOF SURFACES TO A POINT AT LEAST 24" INSIDE THE EXTERIOR WALL LINE, AND ON ALL AREAS WITH A SLOPE LESS THAN 4:12.
2. SEE FRAMING PLAN FOR OVERBUILD AREAS
3. DOTTED LINE INDICATES LINE OF BUILDING BELOW

REVIEWED
By Michael Kyne at 2:13 pm, May 23, 2022

APPROVED
Montgomery County
Historic Preservation Commission

GTM ARCHITECTS

7735 OLD GEORGETOWN ROAD
SUITE 700
BETHESDA, MD 20814
(240)333-2000
(240)333-2001 FAX
WWW.GTMARCHITECTS.COM

Seal

I certify that these documents were prepared or approved by me, and that I am a duly licensed architect under the laws of the State of Maryland, license number 8385, Expiration Date: 12-06-2022.

Consultant

Project
21 HIGH STREET
LOT 3

Owner

Developer

Issue Description	Date
PERMIT SET	4-11-2022

GTM Project No.	18.0320
Checked By	GTM
Drawn By	LEO/DER
Scale	AS NOTED

Sheet Title
ROOF PLAN

Sheet No.
A104

COPYRIGHT, 2022 GTM ARCHITECTS, INC.

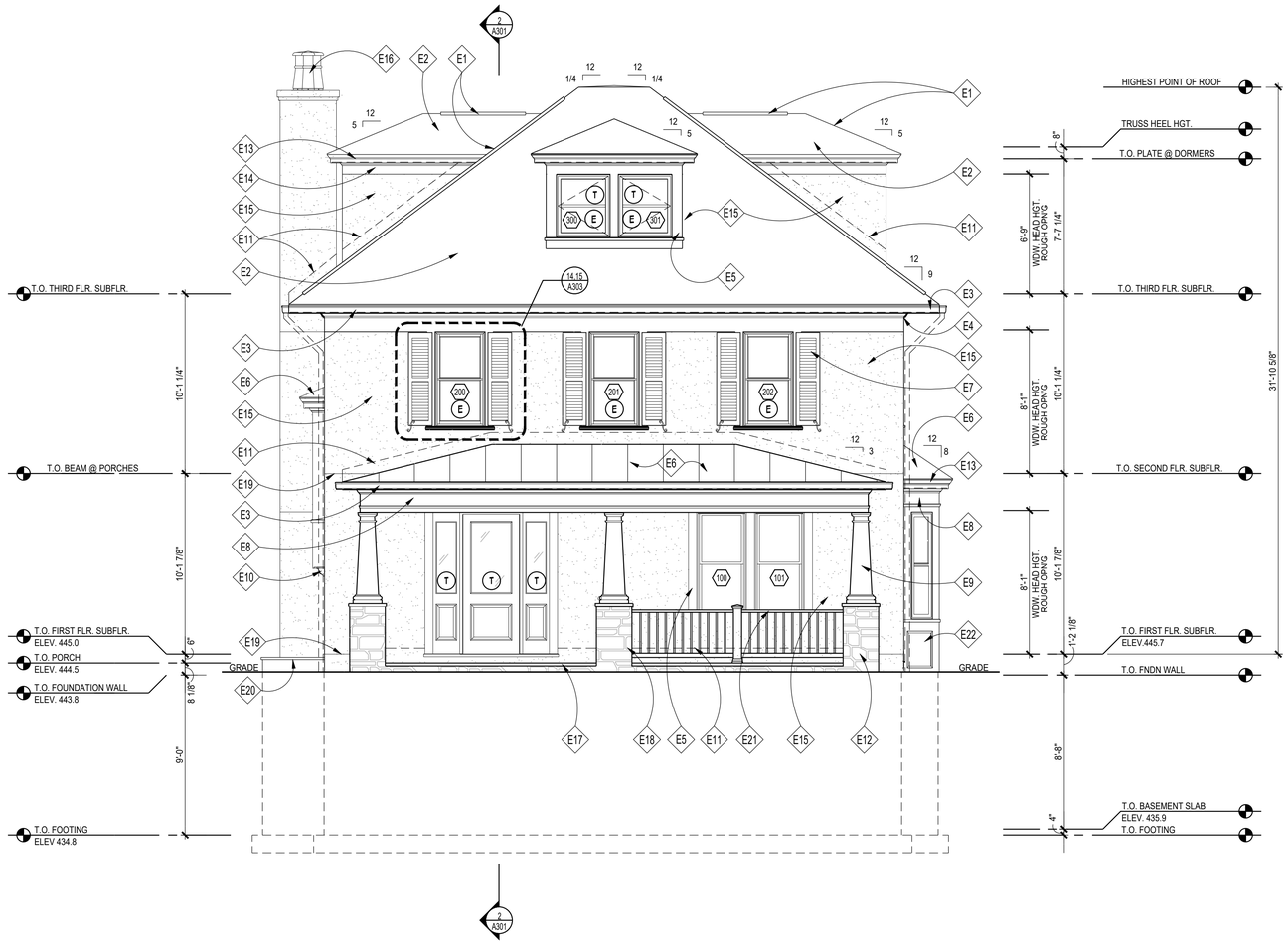

1 FRONT ELEVATION
SCALE: 1/4"=1'=0

ELEVATION NOTES

- E1 RIDGE VENTS BY COR-A-VENT OR APPROVED EQUAL, TYP.; REMOVE IF USING SPRAY FOAM INSULATION, SEE DETAILS '12 & 19/A302'
- E2 ROOFING T.B.S., SEE ROOF PLAN
- E3 OGEE GUTTER (ON 1x6 PTD. FASCIA BD.) & DOWNSPOUT, T.B.S.
- E4 PTD. WD 5/4x12 TRIM BAND W/ WM-47 CROWN, ALIGN W/ TOP OF WINDOWS
- E5 PTD. WD 5/4x6 WINDOW/DOOR TRIM W/ PTD. WD HISTORIC SILL, TYP.;
- E6 STANDING SEAM METAL ROOF, T.B.S.
- E7 OPERABLE SOLID-CORE PTD. CEDAR SHUTTERS & HARDWARE, T.B.S., SEE DETAIL '15/A303'
- E8 PTD. WD 5/4x TRIM BAND W/ WM-47 & WM-287; CUT TO FIT, ALIGN W/ TOP OF WINDOWS/DOORS AND PORCH COLUMNS
- E9 TAPERED SQ. WD COLUMN W/ TUSCAN BASE AND CAPITAL
- E10 PTD. TIMBERBUILD 23T1 WOOD CORBEL
- E11 CONCEALED FLASHING & COUNTER FLASHING @ ALL VERTICAL TRANSITIONS, TYP. EXTEND MIN. 8" BEHIND SIDING. COLOR T.B.S.
- E12 STONE VENEER, TO BE SELECTED
- E13 PTD. 1x6 FASCIA BD. W/ WM-47 CROWN, SEE DETAIL '3/A303'
- E14 PTD. 5/4x8 WD TRIM BAND W/ WM-49 CROWN, TYP.
- E15 3-COAT PORTLAND CEMENT PLASTER (STUCCO) ON MTL. LATH, TYP.;PROVIDE SMOOTH FINISH, SEE STUCCO SPECIFICATIONS, SHEET A003; COLOR & TEXTURE T.B.S.
- E16 STUCCO CHIMNEY FOR PRE-FABRICATED FIREPLACE W/ B-VENT FLUE & HIGH WIND TERMINATION CAP WITHIN DECORATIVE MTL. CHIMNEY POT TBS, SEE DETAIL 4/A304, CHIMNEY TO EXTEND 24" ABOVE ROOF WITHIN 10' PER IRC 2018
- E17 STONE/FLAGSTONE PORCH & STEPS TO GRADE W/ STONE RISERS AND FLAGSTONE TREADS
- E18 STONE VENEER PIERS WITH 2" SLOPE STONE CAP
- E19 STUCCO EXPANSION JOINT, TYP.; SEE SPECIFICATIONS & DETAILS 14 & 15/A304, ALIGN HORIZONTAL JOINT WITH SUBFLOOR
- E20 EGRESS WINDOW WELL PER IRC 2018 W/ SLOPED FLAGSTONE CAP
- E21 PTD. 36" H. DECORATIVE WOOD RAILING
- E22 PTD RECESSED PANEL, SEE DETAIL '18/A302'

NOTE:

1. VERIFY ALL EXTERIOR RISER & TREAD DIMENSIONS IN FIELD
2. ALL EXTERIOR WOOD TRIM TO BE TREATED FOR PROTECTION AGAINST MOISTURE, ROT, FUNGAL ATTACK & INSECTS, WINDSOR-ONE+, LIFESPAN OR EQ.
3. (T) = TEMPERED GLASS
   (E) = EGRESS

REVIEWED
By Michael Kyne at 2:13 pm, May 23, 2022

APPROVED
Montgomery County
Historic Preservation Commission

GTM ARCHITECTS

7735 OLD GEORGETOWN ROAD
SUITE 700
BETHESDA, MD 20814
(240)333-2000
(240)333-2001 FAX
WWW.GTMARCHITECTS.COM

Seal

STATE OF MARYLAND — STEPHEN M. ROSS — 1245 — ARCHITECT

I certify that these documents were prepared or approved by me, and that I am a duly licensed architect under the laws of the State of Maryland, License number 1245, Expiration Date: 12-06-2022.

Consultant

Project
21 HIGH STREET
LOT 3

Owner

Developer

PERMIT SET	4-11-2022

Issue Description *Date*

GTM Project No.	18.0320
Checked By	GTM
Drawn By	LEO/DER
Scale	AS NOTED

Sheet Title
FRONT ELEVATION

Sheet No.
A200

COPYRIGHT, 2022 GTM ARCHITECTS, INC.

FILE NAME:

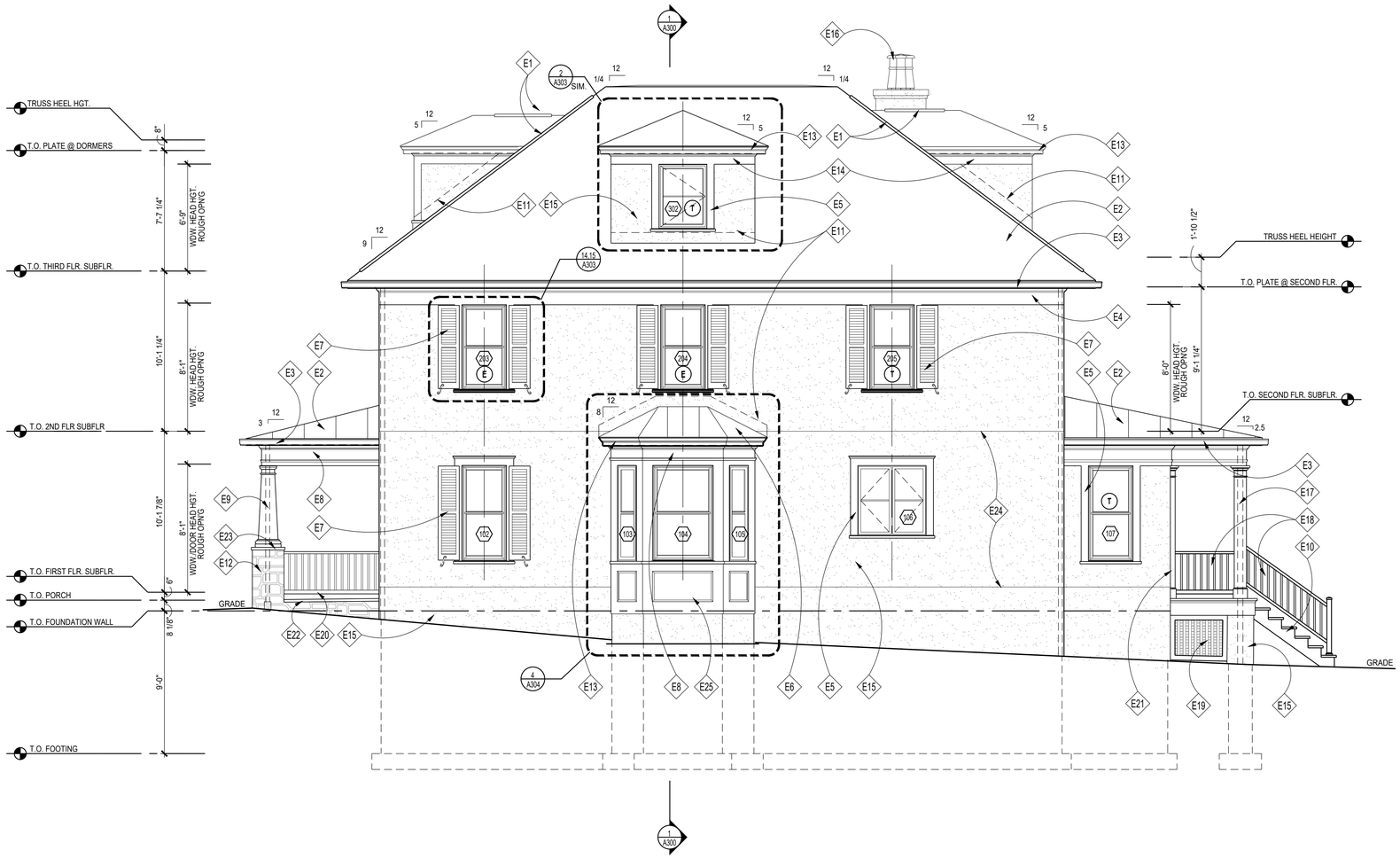

1 RIGHT SIDE ELEVATION

SCALE: 1/4"=1'=0

ELEVATION NOTES

E1	RIDGE VENTS BY COR-A-VENT OR APPROVED EQUAL, TYP.; REMOVE IF USING SPRAY FOAM INSULATION, SEE DETAILS '12 & 19/A302'
E2	ROOFING T.B.S., SEE ROOF PLAN
E3	OGEE GUTTER (ON 1x6 PTD. FASCIA BD.) & DOWNSPOUT, T.B.S.
E4	PTD. WD 5/4x12 TRIM BAND W/ WM-47 CROWN, ALIGN W/ TOP OF WINDOWS
E5	PTD. WD 5/4x6 WINDOW/DOOR TRIM W/ PTD. WD HISTORIC SILL, TYP.;
E6	STANDING SEAM METAL ROOF, T.B.S.
E7	OPERABLE SOLID-CORE PTD. CEDAR SHUTTERS & HARDWARE, T.B.S., SEE DETAIL '15/A303'
E8	PTD. WD 5/4x TRIM BAND W/ WM-47 & WM-287; CUT TO FIT, ALIGN W/ TOP OF WINDOWS/DOORS AND PORCH COLUMNS
E9	TAPERED SQ. WD COLUMN W/ TUSCAN BASE AND CAPITAL
E10	STAIRS TO GRADE, COMPOSITE WOOD RISERS & TREADS, F.V. RISE/RUN
E11	CONCEALED FLASHING & COUNTER FLASHING @ ALL VERTICAL TRANSITIONS, TYP. EXTEND MIN. 8" BEHIND SIDING. COLOR T.B.S.
E12	STONE VENEER, TO BE SELECTED
E13	PTD. 1x6 FASCIA BD. W/ WM-47 CROWN, SEE DETAIL '3/A303'
E14	PTD. 5/4x8 WD TRIM BAND W/ WM-49 CROWN, TYP.
E15	3-COAT PORTLAND CEMENT PLASTER (STUCCO) ON MTL. LATH, TYP.;PROVIDE SMOOTH FINISH, SEE STUCCO SPECIFICATIONS, SHEET A003; COLOR & TEXTURE T.B.S.
E16	STUCCO CHIMNEY FOR PRE-FABRICATED FIREPLACE W/ B-VENT FLUE & HIGH WIND TERMINATION CAP WITHIN DECORATIVE MTL. CHIMNEY POT TBS, SEE DETAIL 9/A302, CHIMNEY TO EXTEND 24" ABOVE ROOF WITHIN 10' PER IRC 2018
E17	SQUARE COLUMN, BUILT UP FROM 1x10's, PTD. (WRAP 6x6 POST) OR 10" SQ. WD COLUMN WRAP CUT FROM 9'-0" STOCK W/ TUSCANBASE AND CAPITAL
E18	PTD. WOOD HANDRAIL/GUARDRAIL PER IRC 2018
E19	PTD. WOOD LATTICE PANEL, SEE 5/A304
E20	PTD. 36" H. DECORATIVE WOOD RAILING
E21	PTD. WD PILASTER TO MATCH COLUMNS
E22	STONE/FLAGSTONE PORCH & STEPS TO GRADE W/ STONE RISERS AND FLAGSTONE TREADS
E23	STONE VENEER PIERS WITH 2" SLOPE STONE CAP
E24	STUCCO EXPANSION JOINT, TYP.; SEE SPECIFICATIONS & DETAILS 14 & 15/A304, ALIGN HORIZONTAL JOINT WITH SUBFLOOR
E25	PTD RECESSED PANEL, SEE DETAIL '18/A302'

NOTE:

1. VERIFY ALL EXTERIOR RISER & TREAD DIMENSIONS IN FIELD
2. ALL EXTERIOR WOOD TRIM TO BE TREATED FOR PROTECTION AGAINST MOISTURE, ROT, FUNGAL ATTACK & INSECTS, WINDSOR-ONE+, LIFESPAN OR EQ.
3. (T) = TEMPERED GLASS
   (E) = EGRESS

REVIEWED
By Michael Kyne at 2:13 pm, May 23, 2022

APPROVED
Montgomery County
Historic Preservation Commission

GTM ARCHITECTS

7735 OLD GEORGETOWN ROAD
SUITE 700
BETHESDA, MD 20814
(240)333-2000
(240)333-2001 FAX
WWW.GTMARCHITECTS.COM

Seal

STATE OF MARYLAND — MICHAEL A. KYNE — No. 7245 — ARCHITECT

I certify that these documents were prepared or approved by me, and that I am a duly licensed Architect under the laws of the State of Maryland, License number 7245, Expiration Date: 12-06-2022.

Consultant

Project

21 HIGH STREET LOT 3

Owner

Developer

PERMIT SET	4-11-2022
Issue Description	*Date*

GTM Project No.	18.0320
Checked By	GTM
Drawn By	LEO/DER
Scale	AS NOTED

Sheet Title

RIGHT SIDE ELEVATION

Sheet No.

A201

COPYRIGHT, 2022 GTM ARCHITECTS, INC.

FILE NAME:

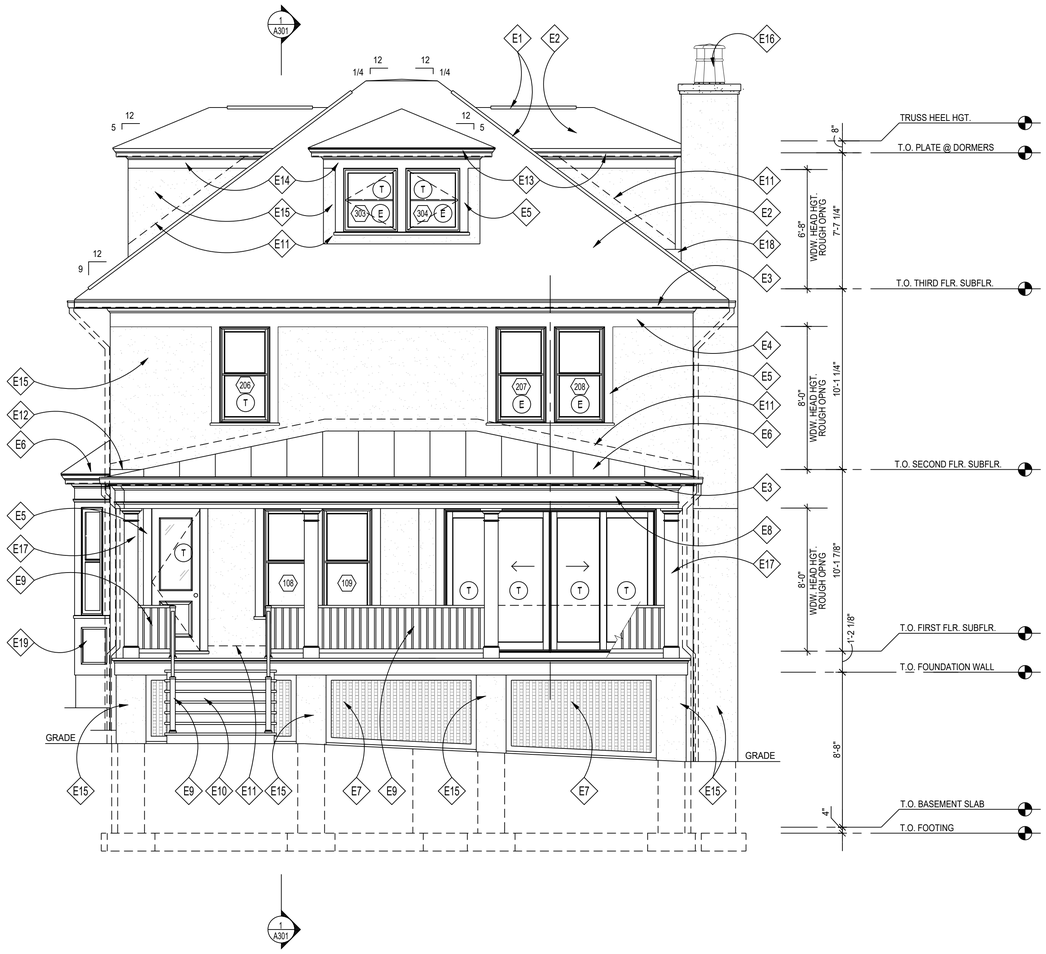

1 REAR ELEVATION
SCALE: 1/4"=1'=0

ELEVATION NOTES

- E1 RIDGE VENTS BY COR-A-VENT OR APPROVED EQUAL, TYP.; REMOVE IF USING SPRAY FOAM INSULATION, SEE DETAILS '12 & 19/A302'
- E2 ROOFING T.B.S., SEE ROOF PLAN
- E3 OGEE GUTTER (ON 1x6 PTD. FASCIA BD.) & DOWNSPOUT, T.B.S.
- E4 PTD. WD 5/4x12 TRIM BAND W/ WM-47 CROWN, ALIGN W/ TOP OF WINDOWS
- E5 PTD. WD 5/4x6 WINDOW/DOOR TRIM W/ PTD. WD HISTORIC SILL, TYP.;
- E6 STANDING SEAM METAL ROOF, T.B.S.
- E7 PTD. WOOD LATTICE PANEL, SEE 5/A304
- E8 PTD. WD 5/4x TRIM BAND W/ WM-47 & WM-287; CUT TO FIT, ALIGN W/ TOP OF WINDOWS/DOORS AND PORCH COLUMNS
- E9 PTD. WOOD HANDRAIL/GUARDRAIL PER IRC 2018
- E10 STAIRS TO GRADE, COMPOSITE WOOD RISERS & TREADS, F.V. RISE/RUN
- E11 CONCEALED FLASHING & COUNTER FLASHING @ ALL VERTICAL TRANSITIONS, TYP. EXTEND MIN. 8" BEHIND SIDING. COLOR T.B.S.
- E12 STUCCO EXPANSION JOINT, TYP.; SEE SPECIFICATIONS & DETAILS 14 & 15/A304, ALIGN HORIZONTAL JOINT WITH SUBFLOOR
- E13 PTD. 1x6 FASCIA BD. W/ WM-47 CROWN, SEE DETAIL '3/A303'
- E14 PTD. 5/4x8 WD TRIM BAND W/ WM-49 CROWN, TYP.
- E15 3-COAT PORTLAND CEMENT PLASTER (STUCCO) ON MTL. LATH, TYP.;PROVIDE SMOOTH FINISH, SEE STUCCO SPECIFICATIONS, SHEET A003; COLOR & TEXTURE T.B.S.
- E16 STUCCO CHIMNEY FOR PRE-FABRICATED FIREPLACE W/ B-VENT FLUE & HIGH WIND TERMINATION CAP WITHIN DECORATIVE MTL. CHIMNEY POT TBS, SEE DETAIL 9/A302, CHIMNEY TO EXTEND 24" ABOVE ROOF WITHIN 10' PER IRC 2018
- E17 SQUARE COLUMN, BUILT UP FROM 1x10's, PTD. (WRAP 6x6 POST) OR 10" SQ. WD COLUMN WRAP CUT FROM 9'-0" STOCK W/ TUSCANBASE AND CAPITAL
- E18 MTL CRICKET PER IRC, MIN 4:12 SLOPE
- E19 PTD RECESSED PANEL, SEE DETAIL '18/A302'

NOTE:

1. VERIFY ALL EXTERIOR RISER & TREAD DIMENSIONS IN FIELD
2. ALL EXTERIOR WOOD TRIM TO BE TREATED FOR PROTECTION AGAINST MOISTURE, ROT, FUNGAL ATTACK & INSECTS, WINDSOR-ONE+, LIFESPAN OR EQ.
3. (T) = TEMPERED GLASS
   (E) = EGRESS

REVIEWED
By Michael Kyne at 2:13 pm, May 23, 2022

APPROVED
Montgomery County
Historic Preservation Commission

GTM ARCHITECTS

7735 OLD GEORGETOWN ROAD
SUITE 700
BETHESDA, MD 20814
(240)333-2000
(240)333-2001 FAX
WWW.GTMARCHITECTS.COM

Seal

STATE OF MARYLAND
MICHAEL DAVID KYNE
No. 7245
ARCHITECT

I HEREBY CERTIFY THAT THESE DOCUMENTS WERE PREPARED OR APPROVED BY ME, AND THAT I AM A DULY LICENSED ARCHITECT UNDER THE LAWS OF THE STATE OF MARYLAND. License No. 7245, Expiration Date: 12-06-2022

Consultant

Project

21 HIGH STREET LOT 3

Owner

Developer

PERMIT SET	4-11-2022

Issue Description	*Date*

GTM Project No.	18.0320
Checked By	GTM
Drawn By	LEO/DER
Scale	AS NOTED

Sheet Title

REAR ELEVATION

Sheet No.

A202

COPYRIGHT, 2022 GTM ARCHITECTS, INC.

FILE NAME:

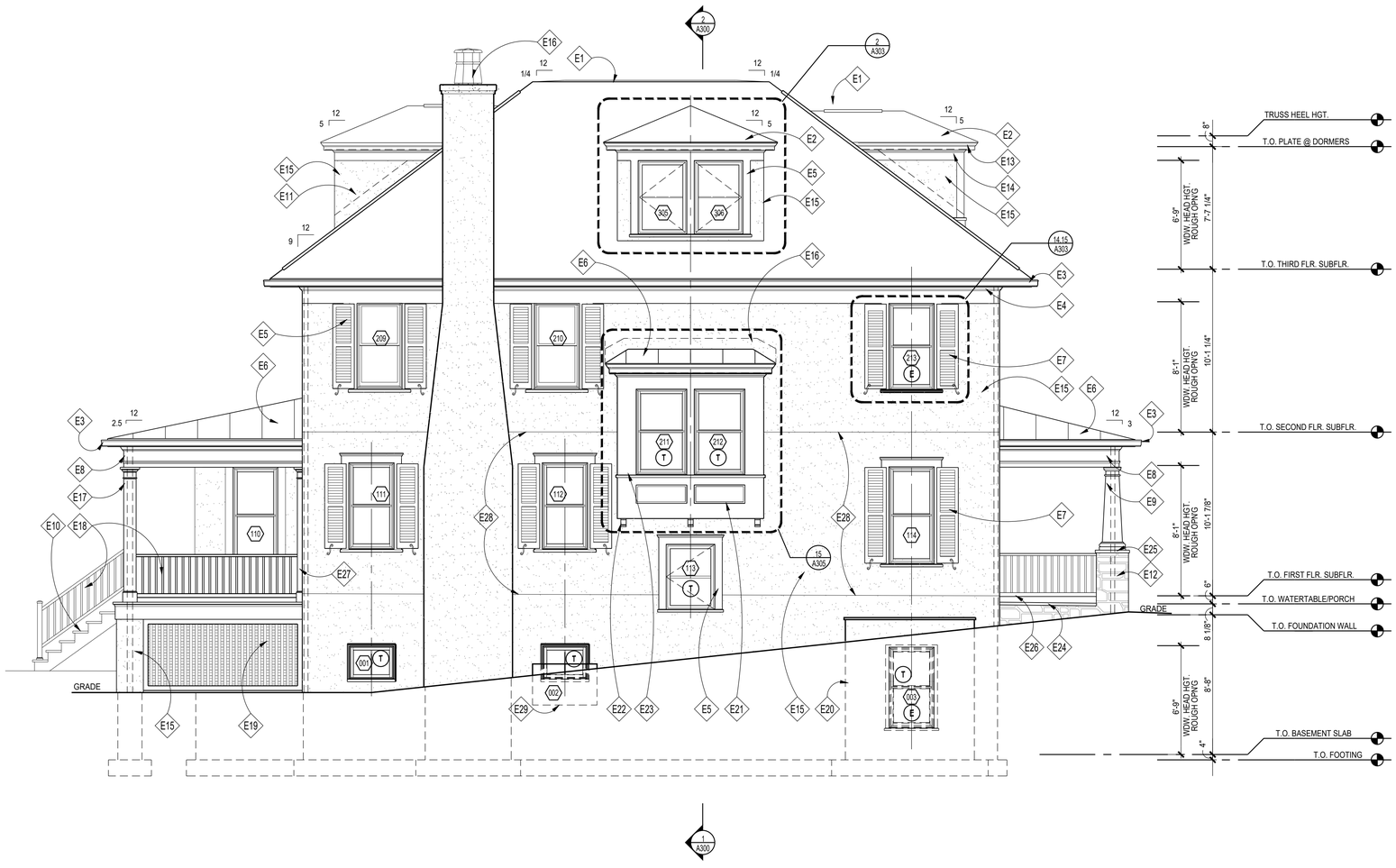

1 LEFT SIDE ELEVATION
SCALE: 1/4"=1'=0

ELEVATION NOTES

- E1 RIDGE VENTS BY COR-A-VENT OR APPROVED EQUAL, TYP.; REMOVE IF USING SPRAY FOAM INSULATION, SEE DETAILS '12 & 19/A302'
- E2 ROOFING T.B.S., SEE ROOF PLAN
- E3 OGEE GUTTER (ON 1x6 PTD. FASCIA BD.) & DOWNSPOUT, T.B.S.
- E4 PTD. WD 5/4x12 TRIM BAND W/ WM-47 CROWN, ALIGN W/ TOP OF WINDOWS
- E5 PTD. WD 5/4x6 WINDOW/DOOR TRIM W/ PTD. WD HISTORIC SILL, TYP.;
- E6 STANDING SEAM METAL ROOF, T.B.S.
- E7 OPERABLE SOLID-CORE PTD. CEDAR SHUTTERS & HARDWARE, T.B.S., SEE DETAIL '15/A303'
- E8 PTD. WD 5/4x TRIM BAND W/ WM-47 & WM-287; CUT TO FIT, ALIGN W/ TOP OF WINDOWS/DOORS AND PORCH COLUMNS
- E9 TAPERED SQ. WD COLUMN W/ TUSCAN BASE AND CAPITAL
- E10 STAIRS TO GRADE, COMPOSITE WOOD RISERS & TREADS, F.V. RISE/RUN
- E11 CONCEALED FLASHING & COUNTER FLASHING @ ALL VERTICAL TRANSITIONS, TYP. EXTEND MIN. 8" BEHIND SIDING. COLOR T.B.S.
- E12 STONE VENEER, TO BE SELECTED
- E13 PTD. 1x6 FASCIA BD. W/ WM-47 CROWN, SEE DETAIL '3/A303'
- E14 PTD. 5/4x8 WD TRIM BAND W/ WM-49 CROWN, TYP.
- E15 3-COAT PORTLAND CEMENT PLASTER (STUCCO) ON MTL. LATH, TYP.;PROVIDE SMOOTH FINISH, SEE STUCCO SPECIFICATIONS, SHEET A003; COLOR & TEXTURE T.B.S.
- E16 STUCCO CHIMNEY FOR PRE-FABRICATED FIREPLACE W/ B-VENT FLUE & HIGH WIND TERMINATION CAP WITHIN DECORATIVE MTL. CHIMNEY POT TBS, SEE DETAIL 9/A302, CHIMNEY TO EXTEND 24" ABOVE ROOF WITHIN 10' PER IRC 2018
- E17 SQUARE COLUMN, BUILT UP FROM 1x10's, PTD. (WRAP 6x6 POST) OR 10" SQ. WD COLUMN WRAP CUT FROM 9'-0" STOCK W/ TUSCANBASE AND CAPITAL
- E18 PTD. WOOD HANDRAIL/GUARDRAIL PER IRC 2018
- E19 PTD. WOOD LATTICE PANEL, SEE 5/A304
- E20 EGRESS WINDOW WELL PER IRC 2018 W/ SLOPED FLAGSTONE CAP
- E21 PTD RECESSED PANEL, SEE DETAIL '18/A302'
- E22 PTD. TIMBERBUILD 23T1 WOOD CORBEL
- E23 PTD. 5/4x CUT TO FIT WOOD TRIM
- E24 STONE/FLAGSTONE PORCH & STEPS TO GRADE W/ STONE RISERS AND FLAGSTONE TREADS
- E25 STONE VENEER PIER(S) WITH 2" SLOPE STONE CAP
- E26 PTD. 36" H. DECORATIVE WOOD RAILING
- E27 PTD. WD PILASTER TO MATCH COLUMNS
- E28 STUCCO EXPANSION JOINT, TYP.; SEE SPECIFICATIONS & DETAILS 14 & 15/A304, ALIGN HORIZONTAL JOINT WITH SUBFLOOR
- E29 PREFABRICATED WINDOW WELL, PROVIDE GRAVEL BASE AND DRAIN TO SUMP OR DAYLIGHT

NOTE:

1. VERIFY ALL EXTERIOR RISER & TREAD DIMENSIONS IN FIELD
2. ALL EXTERIOR WOOD TRIM TO BE TREATED FOR PROTECTION AGAINST MOISTURE, ROT, FUNGAL ATTACK & INSECTS, WINDSOR-ONE+, LIFESPAN OR EQ.
3. (T) = TEMPERED GLASS
   (E) = EGRESS

REVIEWED
By Michael Kyne at 2:14 pm, May 23, 2022

APPROVED
Montgomery County
Historic Preservation Commission

GTM ARCHITECTS

7735 OLD GEORGETOWN ROAD
SUITE 700
BETHESDA, MD 20814
(240)333-2000
(240)333-2001 FAX
WWW.GTMARCHITECTS.COM

Seal

I certify that these documents were prepared or approved by me, and that I am a duly licensed architect under the laws of the State of Maryland. License number 6305, Expiration Date: 12-06-2022.

Consultant

Project
21 HIGH STREET
LOT 3

Owner

Developer

PERMIT SET	4-11-2022
Issue Description	Date

GTM Project No.	18.0320
Checked By	GTM
Drawn By	LEO/DER
Scale	AS NOTED

Sheet Title
LEFT SIDE ELEVATION

Sheet No.
A203

COPYRIGHT, 2022 GTM ARCHITECTS, INC.

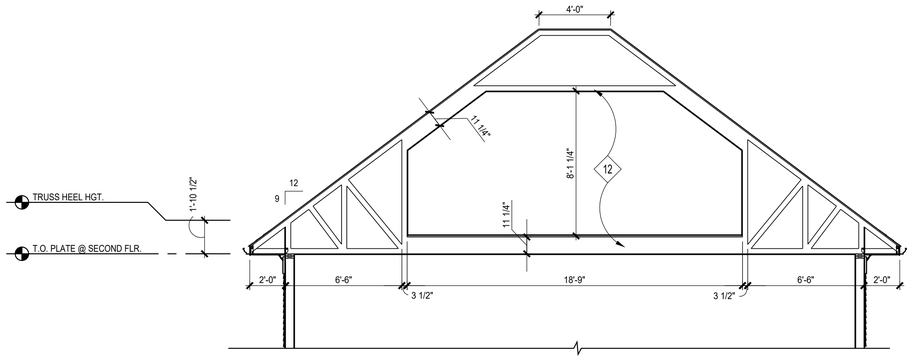

2 TRUSS DETAIL
SCALE: 1/4"=1'=0

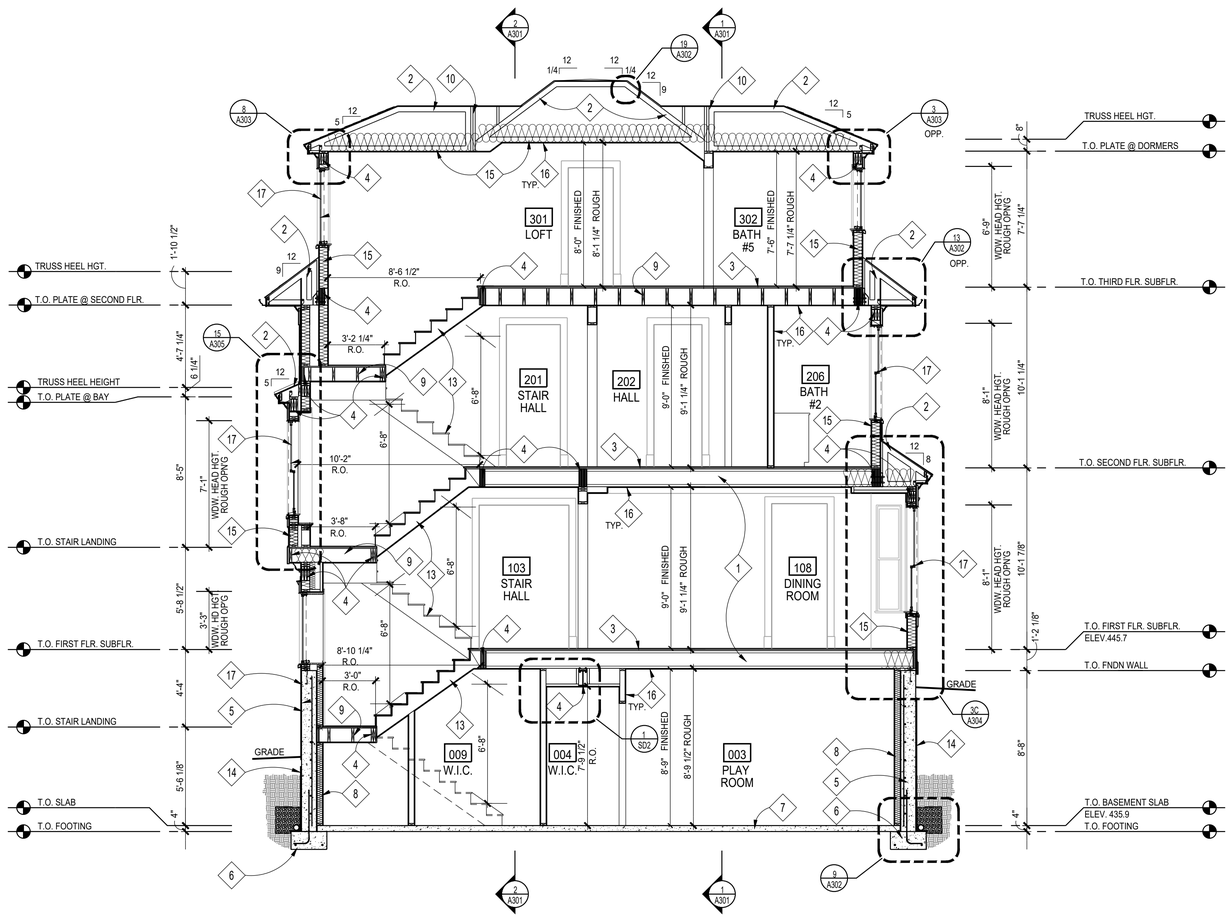

1 BUILDING SECTION @ STAIRS
SCALE: 1/4"=1'=0

CONSTRUCTION NOTES

1. FLOOR JOISTS; SEE FRAMING PLANS
2. ROOF TRUSSES BY TRUSS MANUFACTURER; SEE FRAMING PLANS
3. 3/4" T&G PLYWD. SUBFLOOR; GLUED & SCREWED
4. BEAM/ LINTEL/ HEADER; SEE FRAMING PLANS
5. CONCRETE FOUNDATION WALL; SEE FOUNDATION PLAN
6. FOOTING; SEE FOUNDATION PLAN
7. REINF. CONC. SLAB; SEE FOUNDATION PLAN
8. FUR OUT BASEMENT WALLS W/ 2x4's @ 16" O.C. & R-13 BATT INSULATION, TYP.
9. 2x INFILL FLOOR JOISTS, SEE FRAMING PLANS
10. GIRDER TRUSS BY TRUSS MANUFACTURER; SEE FRAMING PLANS
11. P.T. 2X DECK JOISTS, SEE FRAMING PLANS
12. ATTIC TRUSSES BY TRUSS MANUFACTURER; SEE FRAMING PLANS
13. STAIRCASE & RAILING; TREADS & RISERS, MATCH H.W.F., T.B.S., SEE DETAILS 1&6/A302 & 2,19&20/A304, FOLLOW IRC 2018, RAILING T.B.S.
14. WATERPROOFING AND DRAINAGE BD TO GRADE
15. INSULATION, SEE THERMAL ENVELOPE SHEET EC001
16. 1/2" GYP. BD
17. SCHEDULED WINDOW/DOOR

REVIEWED
By Michael Kyne at 2:13 pm, May 23, 2022

APPROVED
Montgomery County
Historic Preservation Commission

GTM ARCHITECTS

7735 OLD GEORGETOWN ROAD
SUITE 700
BETHESDA, MD 20814
(240)333-2000
(240)333-2001 FAX
WWW.GTMARCHITECTS.COM

Seal

STATE OF MARYLAND · JAMES E. TROTTER · No. 7245 · ARCHITECT

I certify that these documents were prepared or approved by me, and that I am a duly licensed architect under the laws of the State of Maryland, License number 7245, Expiration Date: 12-06-2022.

Consultant

Project
21 HIGH STREET
LOT 3

Owner

Developer

PERMIT SET	4-11-2022

Issue Description	*Date*

GTM Project No.	18.0320
Checked By	GTM
Drawn By	LEO/DER
Scale	AS NOTED

Sheet Title

BUILDING SECTIONS

Sheet No.
A300

COPYRIGHT, 2022 GTM ARCHITECTS, INC.

FILE NAME:

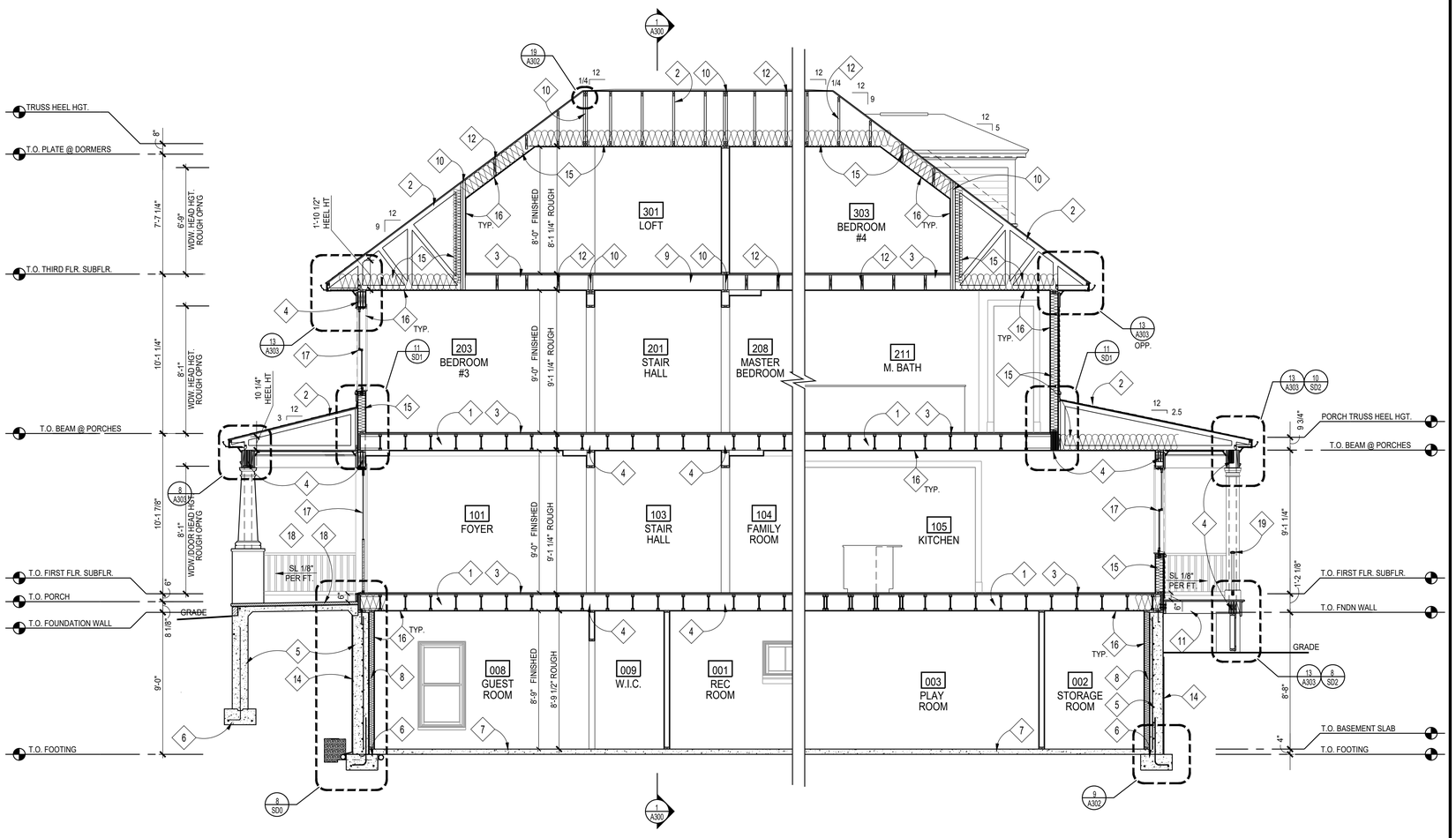

2 BUILDING SECTION @ FRONT PORCH
SCALE: 1/4"=1'=0

1 BUILDING SECTION @ REAR PORCH
SCALE: 1/4"=1'=0

CONSTRUCTION NOTES

1. FLOOR JOISTS; SEE FRAMING PLANS
2. ROOF TRUSSES BY TRUSS MANUFACTURER; SEE FRAMING PLANS
3. 3/4" T&G PLYWD. SUBFLOOR; GLUED & SCREWED
4. BEAM/ LINTEL/ HEADER; SEE FRAMING PLANS
5. CONCRETE FOUNDATION WALL; SEE FOUNDATION PLAN
6. FOOTING; SEE FOUNDATION PLAN
7. REINF. CONC. SLAB; SEE FOUNDATION PLAN
8. FUR OUT BASEMENT WALLS W/ 2x4's @ 16" O.C. & R-13 BATT INSULATION, TYP.
9. 2x INFILL FLOOR JOISTS, SEE FRAMING PLANS
10. GIRDER TRUSS BY TRUSS MANUFACTURER; SEE FRAMING PLANS
11. P.T. 2X DECK JOISTS, SEE FRAMING PLANS
12. ATTIC TRUSSES BY TRUSS MANUFACTURER; SEE FRAMING PLANS
13. GRADE BEAM SUPPORTED BY CONC. WING WALL, SEE FOUNDATION PLAN
14. WATERPROOFING AND DRAINAGE BD TO GRADE
15. INSULATION, SEE THERMAL ENVELOPE SHEET EC001
16. 1/2" GYP. BD
17. SCHEDULED WINDOW/DOOR
18. FLAGSTONE; T.B.S, ON 1" SETTING BED ON STRUCTURAL CONC. SLAB, SEE STRUCTURAL DRAWINGS.
19. PTD. WOOD HANDRAIL/GUARDRAIL PER IRC 2018

REVIEWED
By Michael Kyne at 2:13 pm, May 23, 2022

APPROVED
Montgomery County
Historic Preservation Commission

GTM ARCHITECTS

7735 OLD GEORGETOWN ROAD
SUITE 700
BETHESDA, MD 20814
(240)333-2000
(240)333-2001 FAX
WWW.GTMARCHITECTS.COM

Seal

I certify that these documents were prepared or approved by me, and that I am a duly licensed architect under the laws of the State of Maryland, license number 8385, Expiration Date: 12-06-2022

Consultant

Project
21 HIGH STREET
LOT 3

Owner

Developer

Issue Description	Date
PERMIT SET	4-11-2022

GTM Project No.	18.0320
Checked By	GTM
Drawn By	LEO/DER
Scale	AS NOTED

Sheet Title
BUILDING SECTIONS

Sheet No.
A301

COPYRIGHT, 2022 GTM ARCHITECTS, INC.

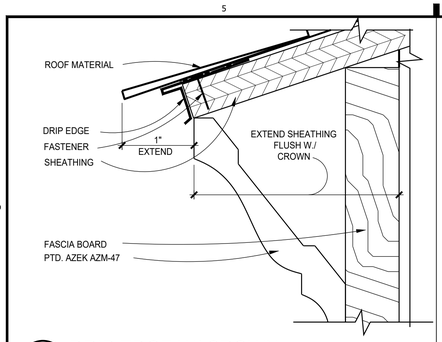

20 DRIP EDGE W/ CROWN
SCALE: 1" = 1"
(1X1)

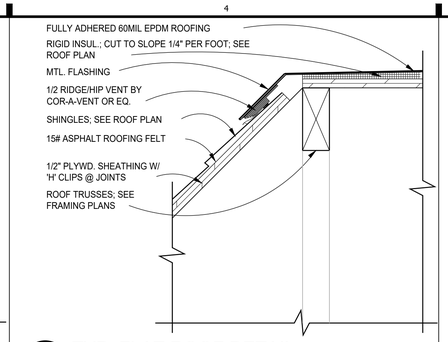

19 TYP. FLAT ROOF DETAIL
SCALE: 3'=1'-0"
(1X1)

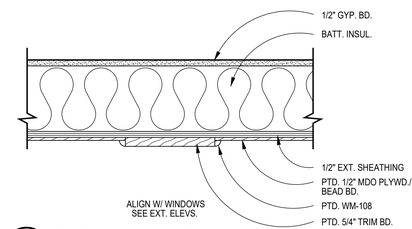

18 EXT. PANEL DETAIL
SCALE: 1"=1'-0"
(1X1)

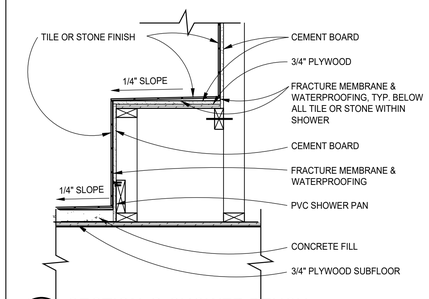

17 SECTION @ SHOWER BENCH
SCALE: 1"=1'-0"
R06-046

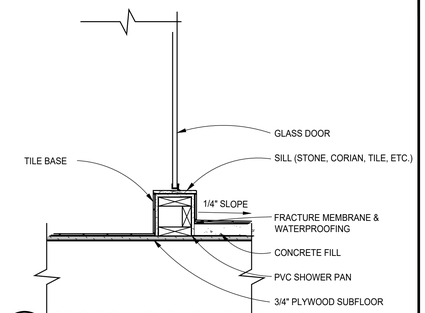

16 SECTION @ SHOWER CURB
SCALE: 1"=1'-0"
R06-047

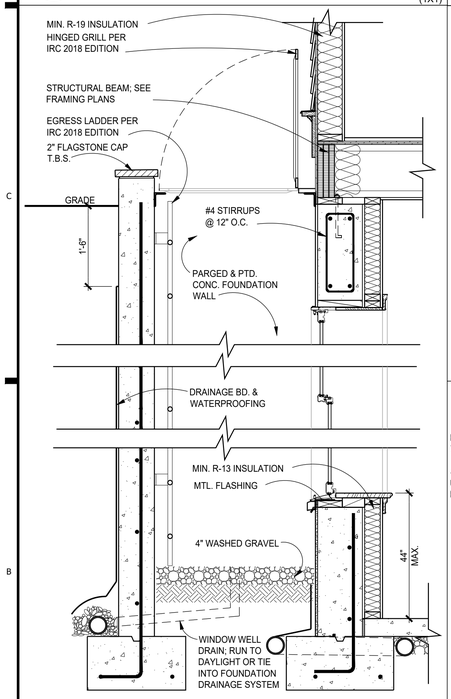

10 WINDOW WELL DETAIL, TYP.
SCALE: 3/4"=1'-0"
R03-021

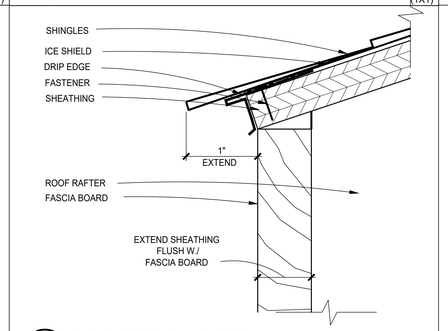

14 DRIP EDGE EAVE DETAIL
SCALE: 1"=1"
R04-051

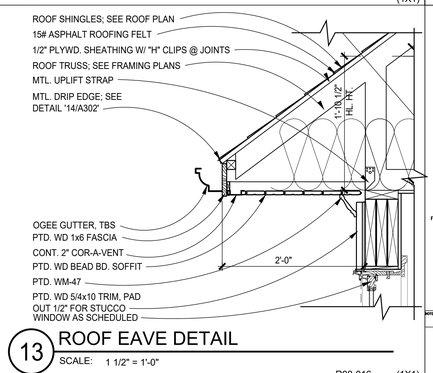

13 ROOF EAVE DETAIL
SCALE: 1 1/2" = 1'-0"
R08-016
(1X1)

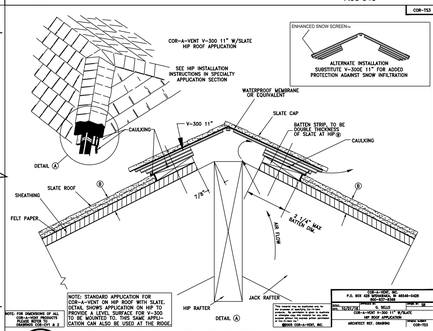

12 HIP/RIDGE VENT DETAIL
SCALE: N.T.S.
(1X1)

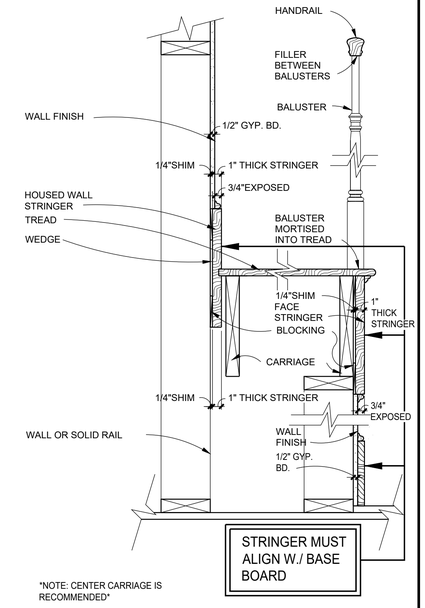

6 TYP. WOOD STAIR TRIM DETAIL
SCALE: 1 1/2"=1'-0"
R06-045

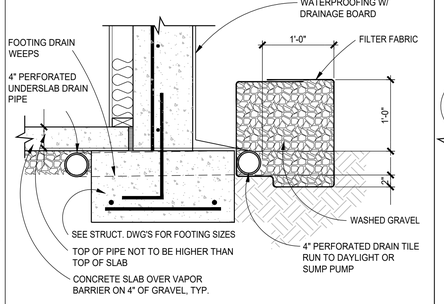

9 TYPICAL FOOTING DETAIL
SCALE: 1"=1'-0"
R01-035

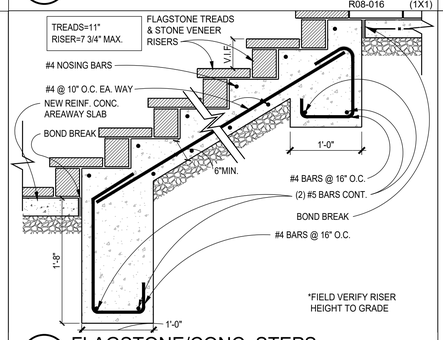

8 FLAGSTONE/CONC. STEPS
SCALE: 1"=1'-0"
R03-022
(1X1)

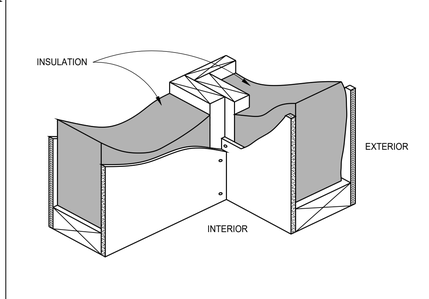

7 CORNER FRAMING DETAIL
SCALE: N.T.S.
(1X1)

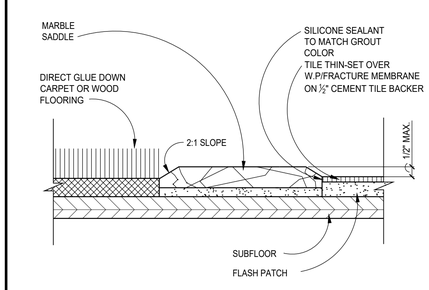

5 THRESHOLD DETAIL
SCALE: N.T.S.
S14-003 (1X1)

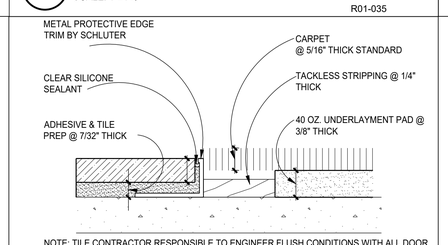

NOTE: TILE CONTRACTOR RESPONSIBLE TO ENGINEER FLUSH CONDITIONS WITH ALL DOOR OPENINGS AND CARPET INSETS, AND TO SUBMIT ANY DETAIL OR RAMPED THRESHOLDS TO GTM FOR APPROVAL. TILE CONTRACTOR RESPONSIBLE TO PREP AND INSTALL ALL TILE MATERIALS, AND TO KEEP PREMISES CLEAN DURING AND AFTER INSTALLATION. TILE CONTRACTOR RESPONSIBLE TO GROUT AND SEAL FINISHED INSTALLATION, AND SUBMIT COLORS FOR GROUTING MATERIALS TO GTM FOR APPROVAL, AND PROVIDE SPEC SHEETS ON SEALANTS, ALONG WITH MAINTENANCE SPECIFICATIONS.

4 TILE-TO-CARPET TRANSITION
SCALE: 12"=1'-0"
S14-001 (1X1)

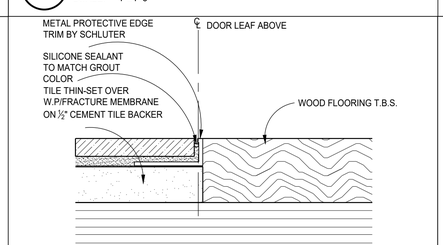

NOTE: TILE CONTRACTOR RESPONSIBLE TO ENGINEER FLUSH CONDITIONS WITH ALL DR. OPENINGS & WOOD/CARPET INSETS, & TO SUBMIT ANY DETAIL OR RAMPED THRESHOLDS TO GTM FOR APPROVAL. TILE CONTRACTOR RESPONSIBLE TO PREP & INSTALL ALL TILE MATERIALS, & TO KEEP PREMISES CLEAN DURING & AFTER INSTALLATION. TILE CONTRACTOR RESPONSIBLE TO GROUT & SEAL FINISHED INSTALLATION, & SUBMIT COLORS FOR GROUTING MATERIALS TO GTM FOR APPROVAL, & PROVIDE SPEC SHEETS ON SEALANTS, ALONG WITH MAINTENANCE SPECS. FOR FLOOR AREAS W/ RADIUS, USE EDGE TRIM W/ RADIUS PERFORATIONS, SCHLUTER "SCHIENE" OR SIM.

3 TILE-TO-WOOD TRANSITION
SCALE: 12"=1'-0"
R06-050
(1X1)

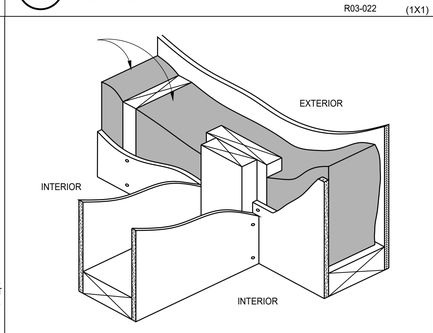

2 INTERSECTING WALL FRAMING
SCALE: N.T.S.
R03-023
(1X1)

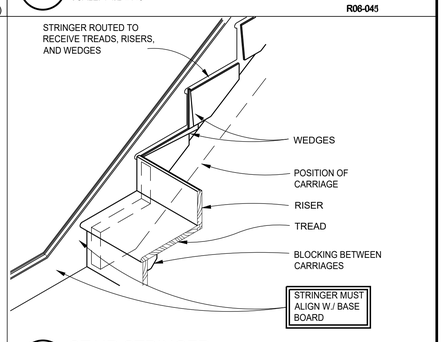

1 STAIR STRINGER
SCALE: 1"=1'-0"
R08-040

REVIEWED
By Michael Kyne at 2:13 pm, May 23, 2022

APPROVED
Montgomery County
Historic Preservation Commission

GTM ARCHITECTS
7735 OLD GEORGETOWN ROAD
SUITE 700
BETHESDA, MD 20814
(240)333-2000
(240)333-2001 FAX
WWW.GTMARCHITECTS.COM

Seal

I certify that these documents were prepared or approved by me, and that I am a duly licensed Architect under the laws of the State of Maryland, License No. 6305, Expiration Date: 12-06-2022.

Consultant

Project
21 HIGH STREET
LOT 3

Owner

Developer

PERMIT SET	4-11-2022

Issue Description	*Date*

GTM Project No.	18.0320
Checked By	GTM
Drawn By	LEO/DER
Scale	AS NOTED

Sheet Title
DETAILS

Sheet No.
A302

COPYRIGHT, 2022 GTM ARCHITECTS, INC.

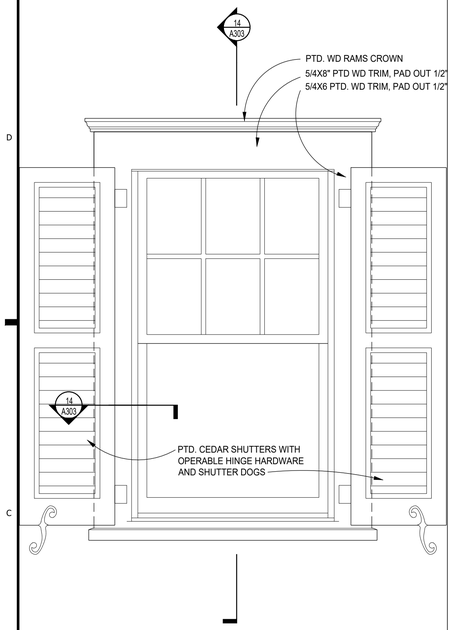

15 TYP. EXTERIOR WDW. ELEVATION
SCALE: 1"=1'-0"

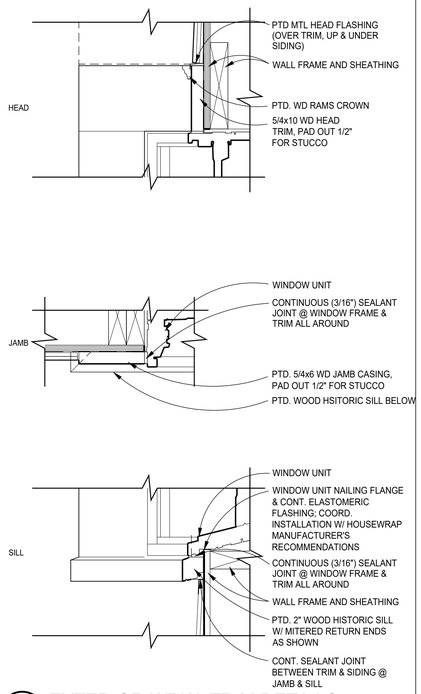

14 EXTERIOR WDW. TRIM DETAILS
SCALE: 3"=1'-0"

(1X2)

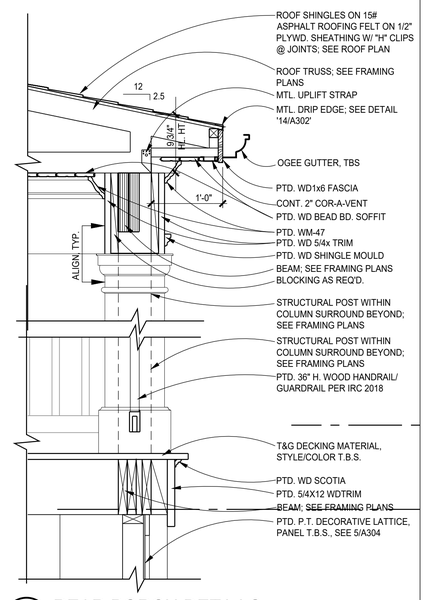

13 REAR PORCH DETAILS
SCALE: 3"=1'-0"

(1X2)

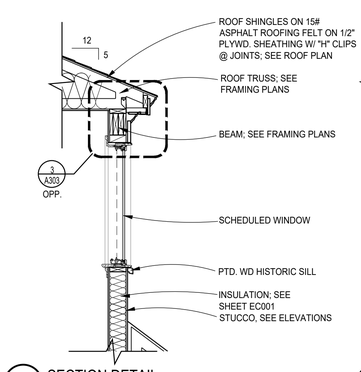

B SECTION DETAIL
SCALE: 1/2"=1'-0"

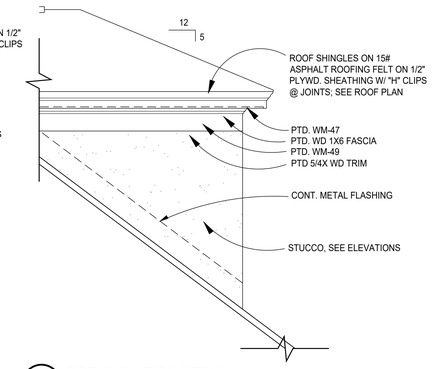

C SIDE ELEVATION DETAIL
SCALE: 1/2"=1'-0"

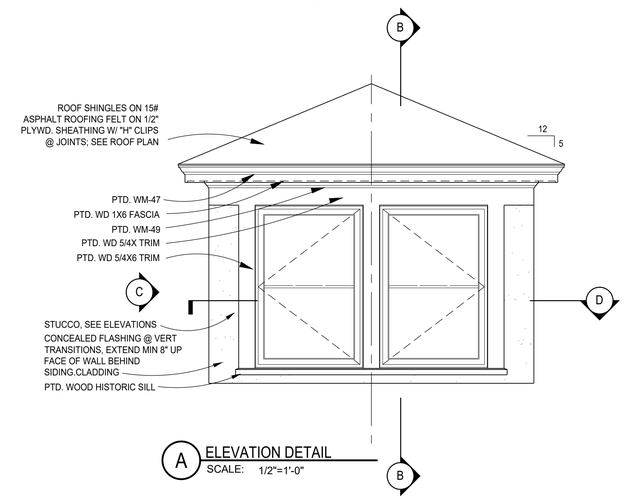

A ELEVATION DETAIL
SCALE: 1/2"=1'-0"

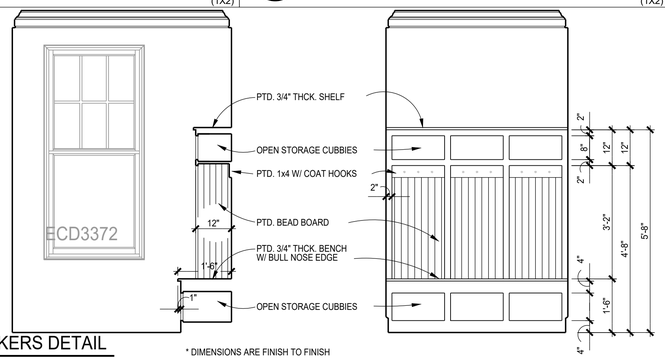

10 MUDROOM LOCKERS DETAIL
SCALE: 1/2"=1'-0"

* DIMENSIONS ARE FINISH TO FINISH
* BUILT-IN TO BE FIELD BUILT FROM 1x & 1/2"-3/4" MDO PLYWD. W/ 1x EDGES

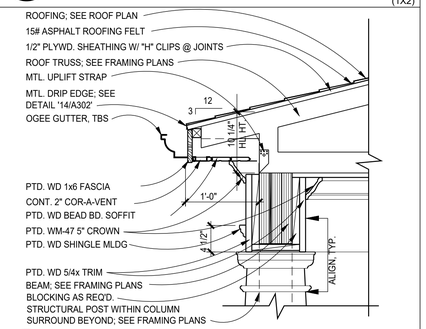

8 FRONT PORCH DETAIL
SCALE: 1"=1'-0"

(1X1)

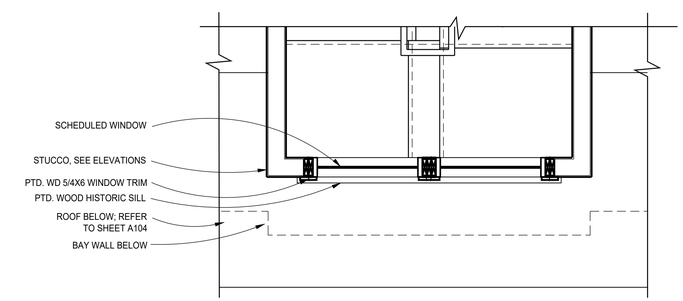

D PLAN DETAIL
SCALE: 1/2"=1'-0"

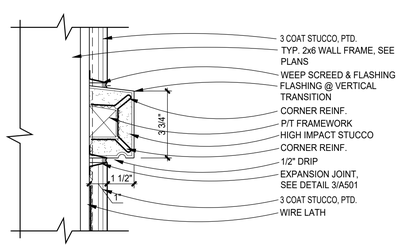

5 STUCCO BAND/SILL DETAIL
SCALE: 3"=1'-0"

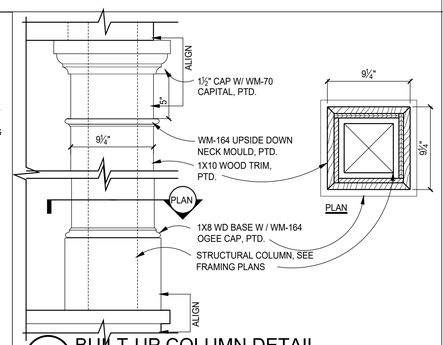

4 BUILT-UP COLUMN DETAIL
SCALE: 1 1/2" =1'-0"

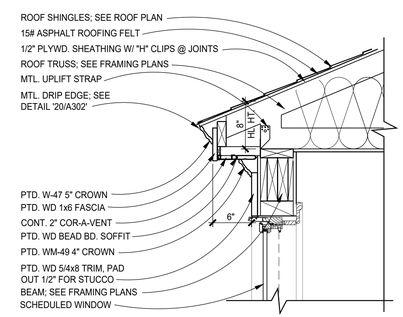

3 DORMER EAVE DETAIL
SCALE: 1 1/2" = 1'-0"

R08-016 (1X1)

2 TYP. DORMER DETAILS
SCALE: 1/2" = 1'-0"

(2X4)

FILE NAME:

REVIEWED
By Michael Kyne at 2:13 pm, May 23, 2022

APPROVED
Montgomery County
Historic Preservation Commission

GTM ARCHITECTS

7735 OLD GEORGETOWN ROAD
SUITE 700
BETHESDA, MD 20814
(240)333-2000
(240)333-2001 FAX
WWW.GTMARCHITECTS.COM

Seal

STATE OF MARYLAND
MICHAEL E. OSTROW
No. 7245
ARCHITECT

I certify that these documents were prepared or approved by me, and that I am a duly licensed Architect under the laws of the State of Maryland, License No. 7245, Expiration Date: 12-06-2022.

Consultant

Project

21 HIGH STREET LOT 3

Owner

Developer

PERMIT SET	4-11-2022

Issue Description	*Date*

GTM Project No.	18.0320
Checked By	GTM
Drawn By	LEO/DER
Scale	AS NOTED

Sheet Title

DETAILS

Sheet No.

A303

COPYRIGHT, 2022 GTM ARCHITECTS, INC.

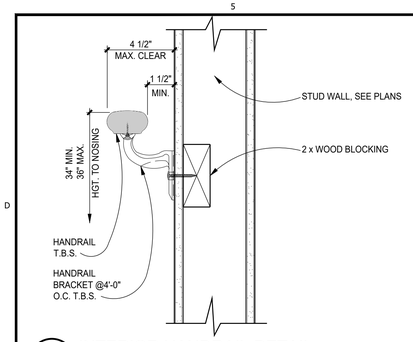

20 INTERIOR HANDRAIL DETAIL

SCALE: 3"=1'-0"

R08-044

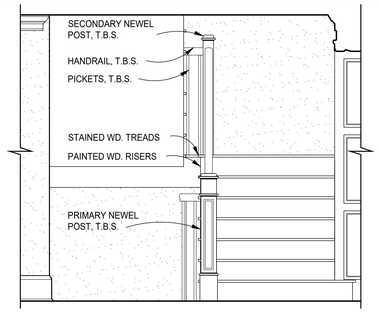

19 STAIR DETAIL

SCALE: 1/2"=1'-0"

(1X1)

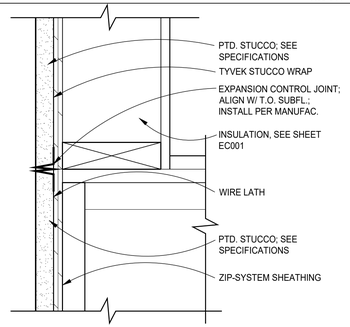

15 EXPANSION CONTROL JOINT DET.

SCALE: 3"=1'-0"

R03-025 (1X1)

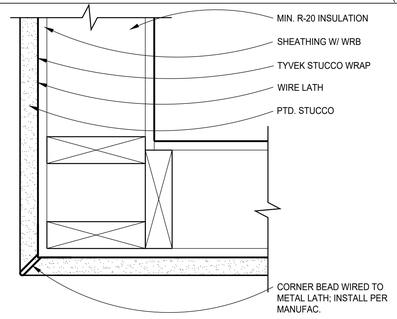

14 EXPANSION CONTROL JOINT DET.

SCALE: 3"=1'-0"

(1X1)

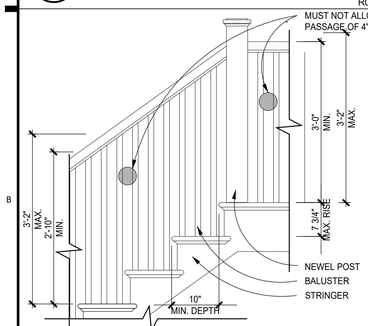

10 HANDRAIL STAIR CLEARANCES

SCALE: 3/4"=1'-0"

R08-045

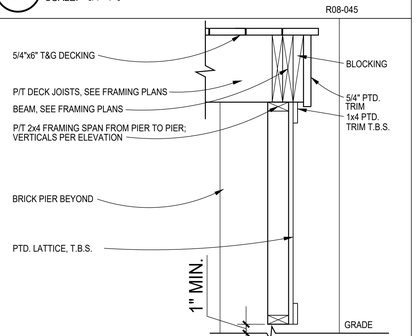

5 LATTICE DETAIL

SCALE: 1"=1'-0"

R08-038 (1X1)

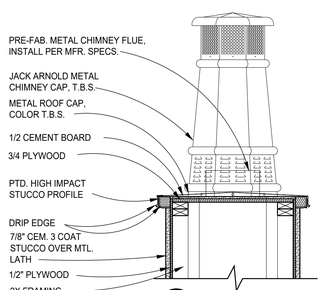

B SECTION

SCALE: AS NOTED

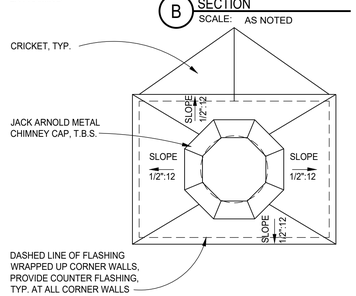

A PLAN

SCALE: AS NOTED

4 CHIMNEY CAP DETAILS

SCALE: 3/4" = 1'-0"

??? (1X2)

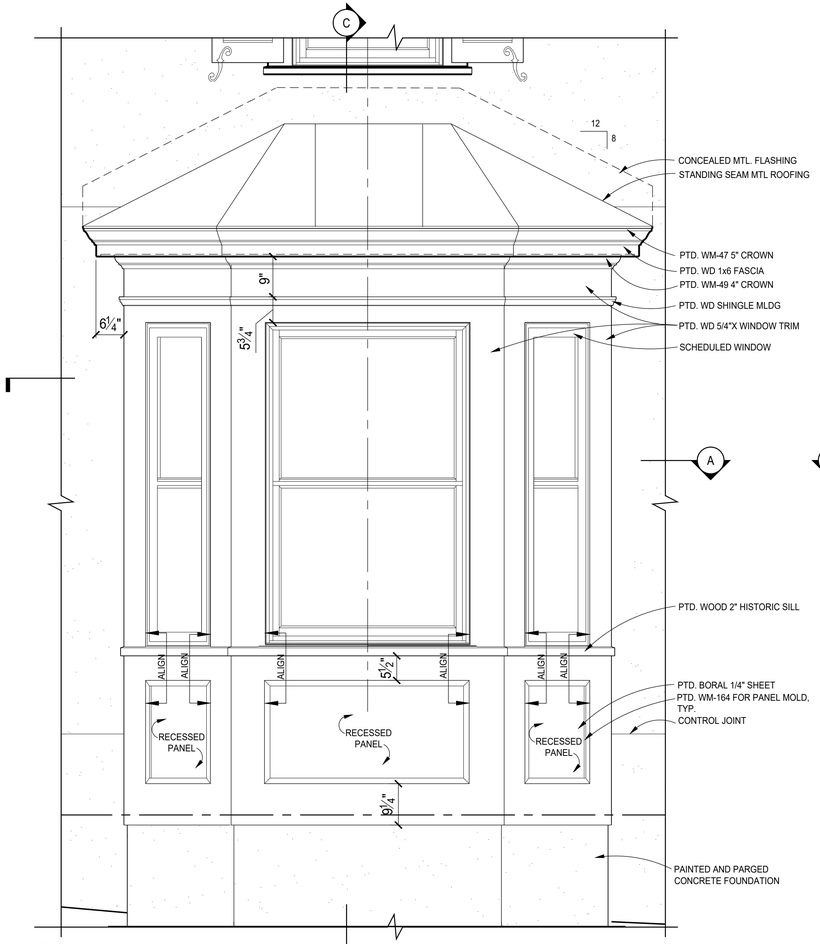

B FRONT ELEVATION

SCALE: 3/4"=1'-0"

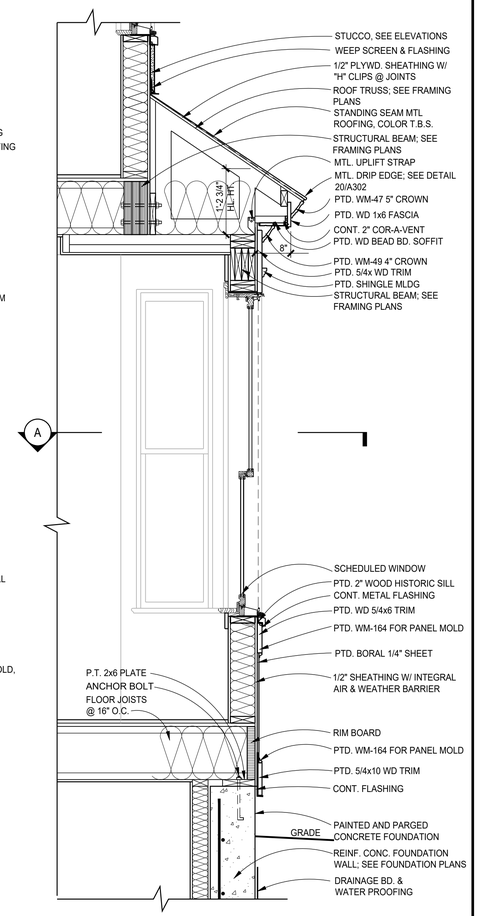

C BAY WINDOW SECTION

SCALE: 3/4"=1'-0"

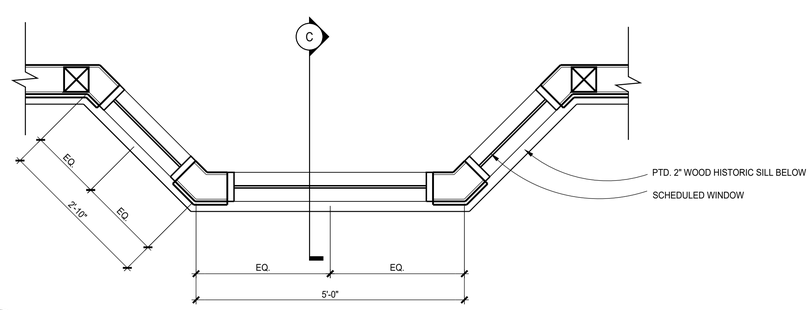

A PLAN

SCALE: 3/4"=1'-0"

3 BAY DETAILS

SCALE: AS NOTED

(3X4)

FILE NAME:

REVIEWED
By Michael Kyne at 2:13 pm, May 23, 2022

APPROVED
Montgomery County
Historic Preservation Commission

GTM ARCHITECTS

7735 OLD GEORGETOWN ROAD
SUITE 700
BETHESDA, MD 20814
(240)333-2000
(240)333-2001 FAX
WWW.GTMARCHITECTS.COM

Seal

I certify that these documents were prepared or approved by me, and that I am a duly licensed Architect under the laws of the State of Maryland, License No. 6305, Expiration Date: 12-06-2022.

Consultant

Project
21 HIGH STREET
LOT 3

Owner

Developer

PERMIT SET	4-11-2022

Issue Description	*Date*

GTM Project No.	18.0320
Checked By	GTM
Drawn By	LEO/DER
Scale	AS NOTED

Sheet Title

DETAILS

Sheet No.

A304

COPYRIGHT, 2022 GTM ARCHITECTS, INC.

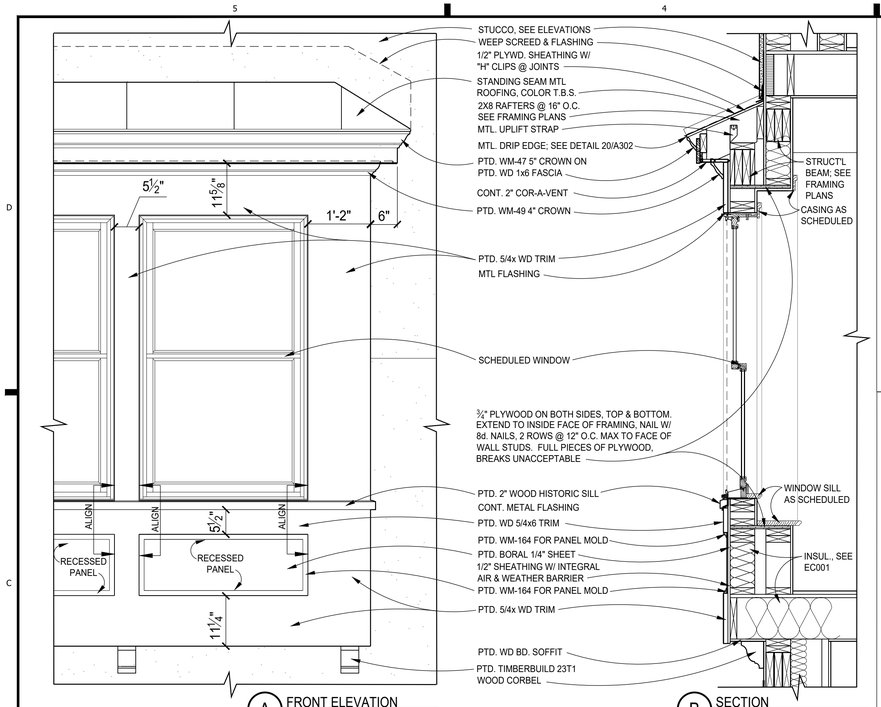

15 BAY DETAILS
SCALE: AS NOTED

18 NOT USED
SCALE:

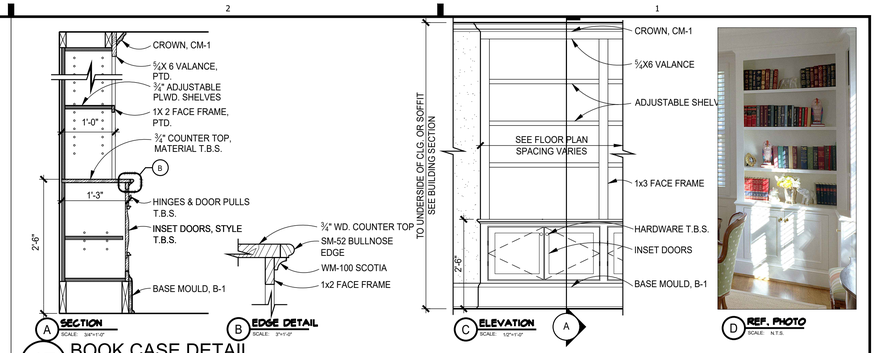

17 BOOK CASE DETAIL
SCALE: AS NOTED

(1X1)

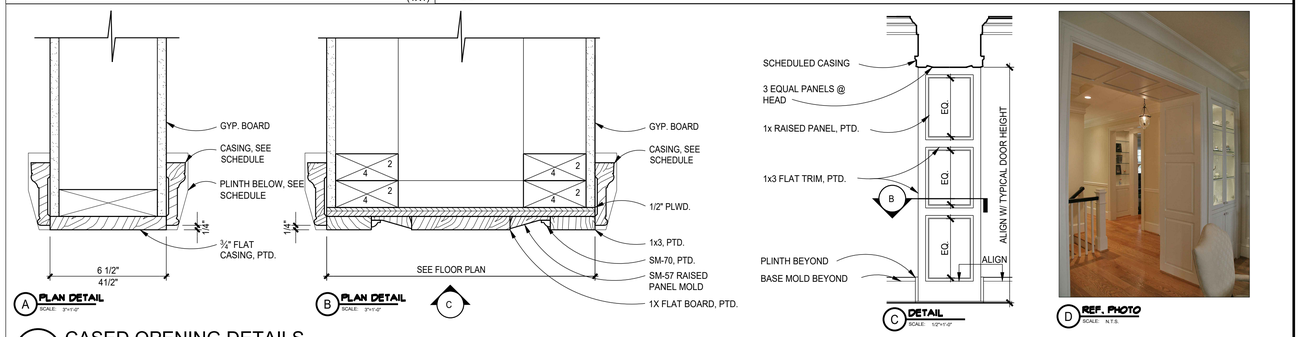

13 CASED OPENING DETAILS
SCALE: AS NOTED

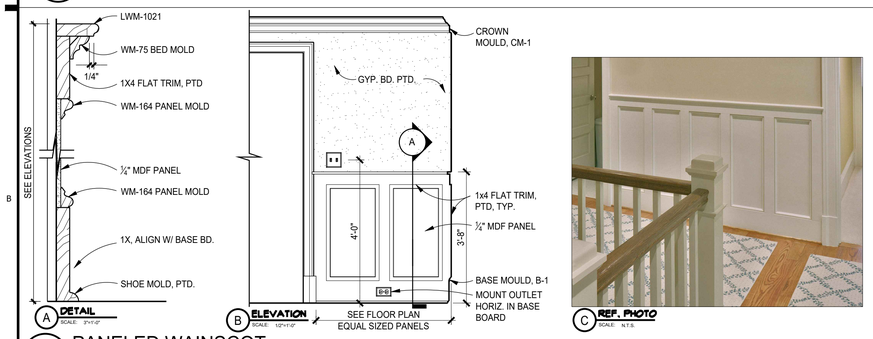

10 PANELED WAINSCOT
SCALE: AS NOTED

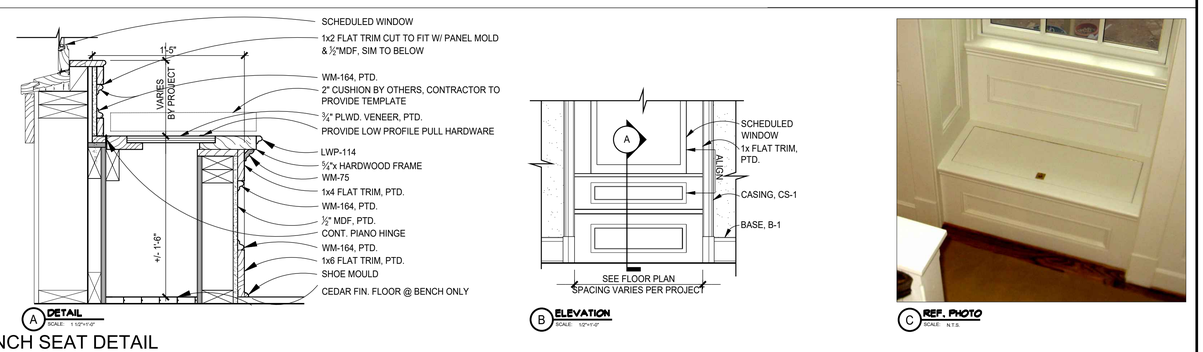

8 BENCH SEAT DETAIL
SCALE: AS NOTED

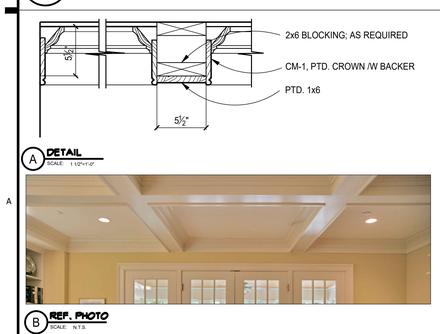

5 COFFERED CEILING DETAIL
SCALE: 1 1/2"=1'-0"

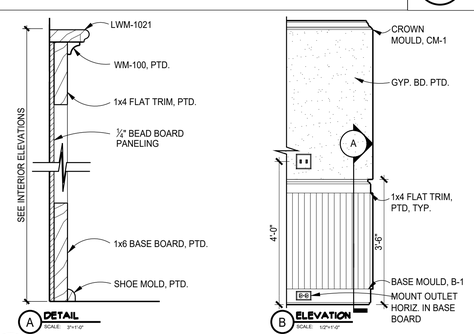

4 BEAD BD. WAINSCOT DETAILS
SCALE: AS NOTED

C REF. PHOTO SCALE: N.T.S.

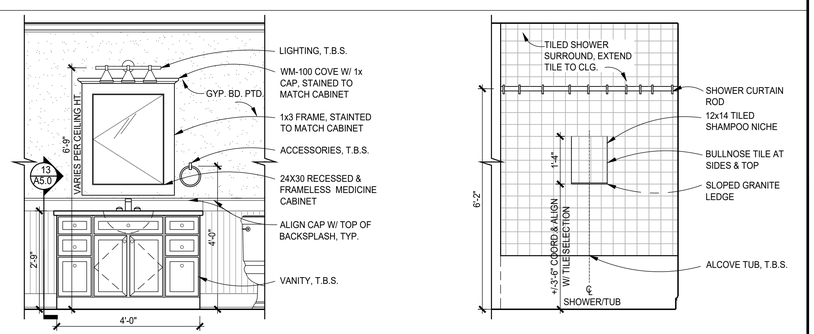

2 TYPICAL BATHROOM DETAILS
SCALE: 1/2"=1'-0"

REVIEWED
By Michael Kyne at 2:13 pm, May 23, 2022

APPROVED
Montgomery County
Historic Preservation Commission

GTM ARCHITECTS

7735 OLD GEORGETOWN ROAD
SUITE 700
BETHESDA, MD 20814
(240)333-2000
(240)333-2001 FAX
WWW.GTMARCHITECTS.COM

Seal

I certify that these documents were prepared or approved by me, and that I am a duly licensed architect under the laws of the State of Maryland, license number 6305, Expiration Date: 12-06-2022.

Consultant

Project
21 HIGH STREET LOT 3

Owner

Developer

PERMIT SET	4-11-2022

Issue Description	Date

GTM Project No.	18.0320
Checked By	GTM
Drawn By	LEO/DER
Scale	AS NOTED

Sheet Title
DETAILS

Sheet No.
A305

COPYRIGHT, 2022 GTM ARCHITECTS, INC.

FILE NAME:

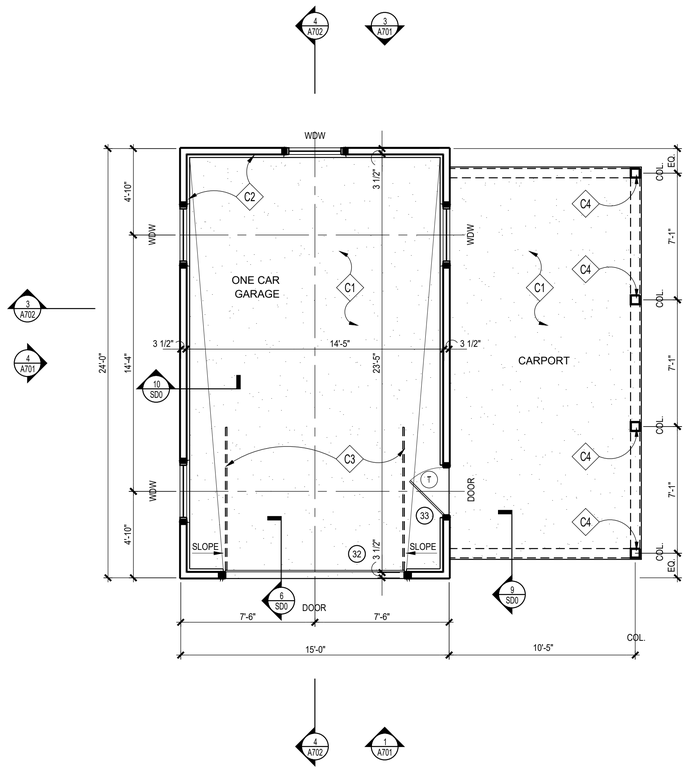

1 GARAGE PLAN
SCALE: 1/4"=1'-0"

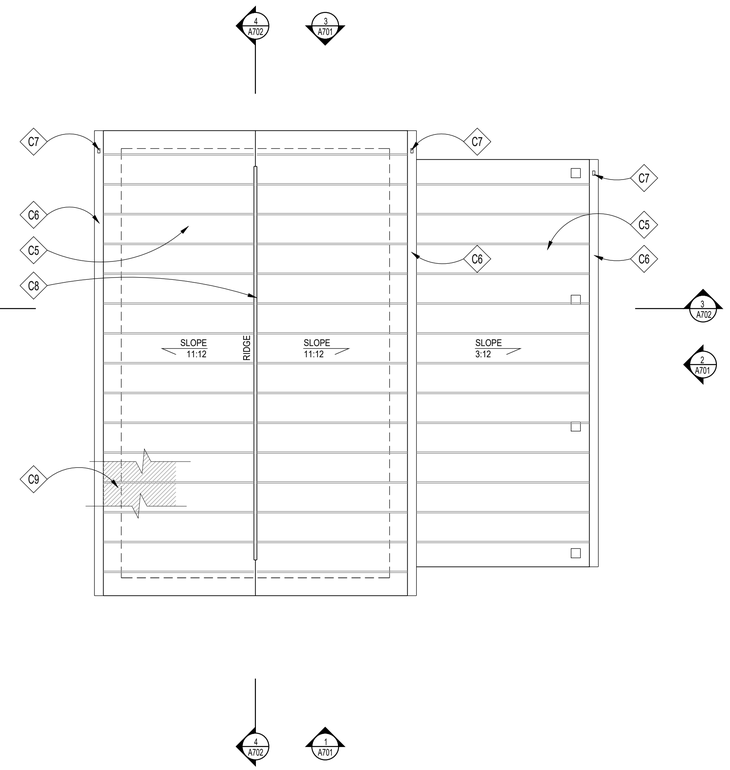

2 ROOF PLAN
SCALE: 1/4"=1'-0"

CONSTRUCTION NOTES

- C1 REINF. CONC. SLAB; SEE FOUNDATION PLAN
- C2 CONC. CURB BELOW
- C3 GARAGE DOOR TRACKS ABOVE
- C4 6x6 P.T. POST, PTD.
- C5 STANDING SEAM METAL ROOF, T.B.S.
- C6 GUTTER TO MATCH MAIN HOUSE
- C7 DOWNSPOUT TO MATCH MAIN HOUSE; SEE CIVIL DRAINAGE PLAN FOR ADDITIONAL INFO
- C8 RIDGE/HIP VENTS BY COR-A-VENT OR APPROVED EQUAL
- C9 SEE NOTE #1 UNDER GENERAL ROOFING NOTES, TYP.

ROOFING NOTES

1. PROVIDE SELF-ADHERING, 40 MIL ICE AND WATER GUARD UNDERLAYMENT UNDER SHINGLES AT ALL VALLEYS AND FROM LOWEST EDGE OF ROOF SURFACES TO A POINT AT LEAST 24" INSIDE THE EXTERIOR WALL LINE, AND ON ALL AREAS WITH A SLOPE LESS THAN 4:12.
2. SEE FRAMING PLAN FOR OVERBUILD AREAS
3. DOTTED LINE INDICATES LINE OF BUILDING BELOW

WALL TYPES

TYPICAL EXTERIOR WALL: 2x4 WOOD STUDS 16" O.C. W/ VAPOR BARRIER, 1/2" OSB SHEATHING, TYVEK STUCCO WRAP, & PTD. LAP SIDING TO MATCH MAIN HOUSE; SEE ELEVATIONS.

REVIEWED
By Michael Kyne at 2:13 pm, May 23, 2022

APPROVED
Montgomery County
Historic Preservation Commission

GTM ARCHITECTS

7735 OLD GEORGETOWN ROAD
SUITE 700
BETHESDA, MD 20814
(240)333-2000
(240)333-2001 FAX
WWW.GTMARCHITECTS.COM

Seal

I certify that these documents were prepared or approved by me, and that I am a duly licensed architect under the laws of the State of Maryland, license number 8385, Expiration Date: 12-06-2022.

Consultant

Project
21 HIGH STREET
LOT 3

Owner

Developer

Issue Description	Date
PERMIT SET	4-11-2022

GTM Project No.	18.0320
Checked By	GTM
Drawn By	LEO/DER
Scale	AS NOTED

Sheet Title
GARAGE PLANS

Sheet No.
A700

COPYRIGHT, 2022 GTM ARCHITECTS, INC.

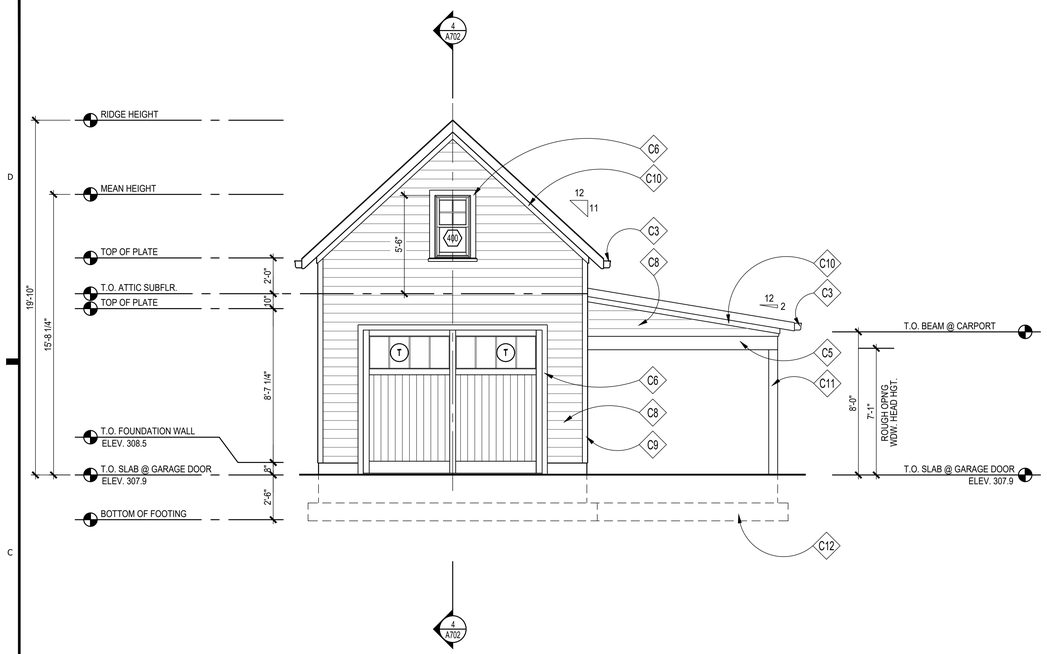

1 FRONT ELEVATION
SCALE: 1/4"=1'-0"

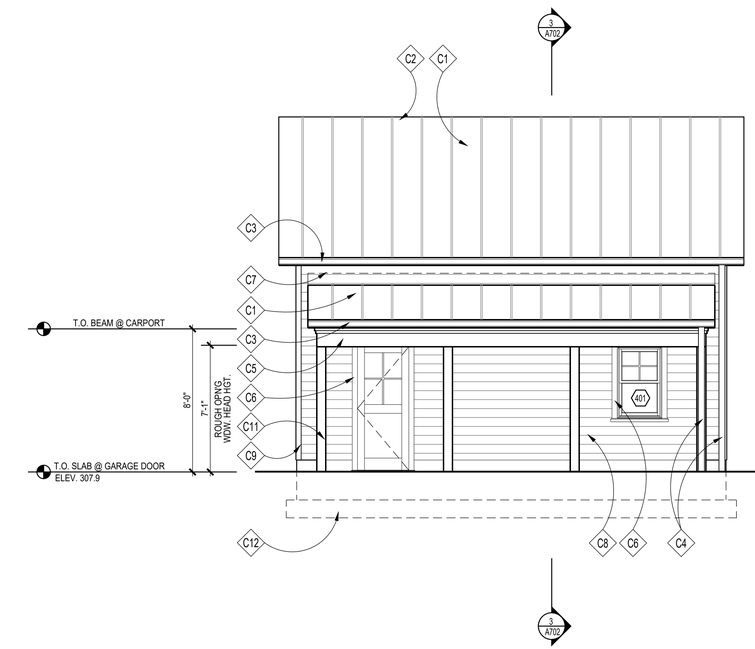

2 RIGHT SIDE ELEVATION
SCALE: 1/4"=1'-0"

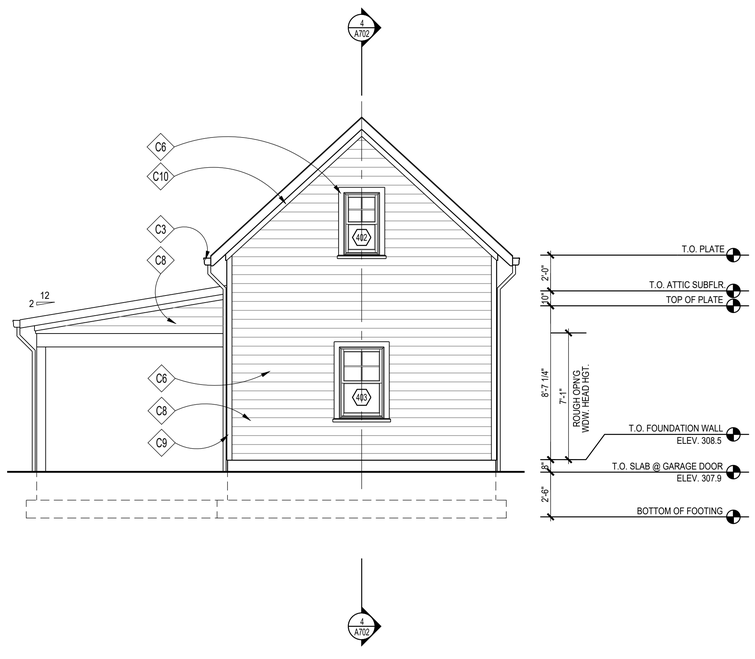

3 REAR ELEVATION
SCALE: 1/4"=1'-0"

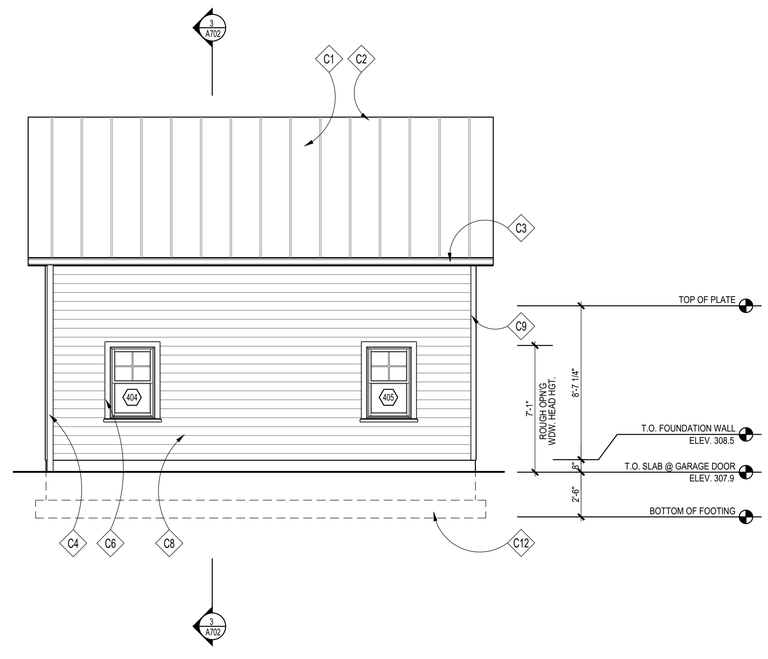

4 LEFT SIDE ELEVATION
SCALE: 1/4"=1'-0"

CONSTRUCTION NOTES

C1	STANDING SEAM METAL ROOF, T.B.S.
C2	RIDGE/HIP VENTS BY COR-A-VENT OR APPROVED EQUAL
C3	OGEE GUTTER (ON 1x6 PTD. FASCIA BD.)
C4	DOWNSPOUT TO MATCH MAIN HOUSE; SEE CIVIL DRAINAGE PLAN FOR ADDITIONAL INFO
C5	PTD. AZEK 5/4x12 TRIM BAND, ALIGN W/ TOP OF WINDOWS
C6	PTD. WOOD 5/4x4 WINDOW/DOOR TRIM W/ PTD. WOOD HISTORIC SILL, TYP.
C7	CONCEALED FLASHING, TYP.
C8	PTD. HARDIE SIDING, 6" EXPOSURE
C9	PTD. WOOD 5/4x4 CORNER TRIM BOARDS, TYP.
C10	PTD. WOOD 5/4x4 RAKE, TYP.
C11	P.T. 6x6 POST, PTD.
C12	LINE OF FOOTING BELOW

ROOFING NOTES

1. MEMBRANE ROOF SHALL BE 60 MIL, WHITE PVC, ASTM D 4434, TYPE III, FABRIC REINFORCED. THE MEMBRANE SHALL BE ADHERED TO MECHANICALLY FASTENED, POLYISOCYANURATE BOARD INSULATION ASTM C 1289, FELT OR GLASS-FIBER MAT FACER ON BOTH MAJOR SURFACES. TAPERED INSULATION SHALL BE FACTORY-MADE TO A MINIMUM SLOPE OF 1/4" PER FOOT. INSULATION SHALL BE INSTALLED IN TWO LAYERS WITH JOINTS STAGGERED.
2. PROVIDE FLASHING FOR MIN. 8" EACH SIDE OF ALL VALLEYS & PITCH CHANGES

WALL TYPES

TYPICAL EXTERIOR WALL: 2x4 WOOD STUDS 16" O.C. W/ VAPOR BARRIER, 1/2" OSB SHEATHING, TYVEK STUCCO WRAP, & PTD. STUCCO TO MATCH MAIN HOUSE; SEE ELEVATIONS.

GENERAL NOTES

1. REFER TO THE ARCH DWGS FOR DIMENSIONS, ELEVATIONS, AND BALANCE OF INFORMATION. REFER TO MEP DWGS FOR ADD'L INFO ON DRAINGS, UTILITY LINES, SLEEVES & OPENING REQ'S.
2. REFER TO SN.1 FOR STRUCTURAL NOTES. REFER TO SD.1, SD.2, SD.3, SD.4 & WB.1 FOR APPLICABLE DETAILS NOT REFERENCED ON PLANS.
3. PROVIDE SOLID BLOCKING BETWEEN FLOORS UNDER ALL WOOD POSTS ALL THE WAY DOWN TO TOP OF BEAMS & CONC WALLS. PROVIDE 2x6 SQUASH BLOCKING EA. SIDE OF TJI JOISTS AT STACKED LOAD BEARING WALLS, INSTALL PER TJI. MANUF. PROVIDE INTERMEDIATE HORIZONTAL BLKG. STUDS AT 4'-0" VERTICAL SPACING AT ALL LOAD BEARING WALLS.
4. IN ADDITION TO POSTS SHOWN ON PLAN PROVIDE THE FOLLOWING:
   ADD'L (1) KING STUD EACH SIDE OF OPNGS UP TO 4'-0" WIDE.
   ADD'L (2) KING STUD EACH SIDE OF OPNGS UP TO 8'-0" WIDE.
5. PROVIDE FRAMING CONNECTORS FOR JOISTS, BEAMS & POSTS. CONNECTORS SHALL BE BY SIMPSON STRONG-TIE OR EQ. AND SHALL BE PROPERLY SIZED ACCORDING TO MEMBER SIZES, AND INSTALLED ACCORDING TO MANUFACTURER. PROVIDE SIMPSON H2.5A UPLIFT CONNECTORS AT ALL RAFTERS. PROVIDE ST215 STRAPS CONNECTING TOP OF SHEARWALLS TO HEADERS.
6. INSTALL CHIMNEY ANCHORAGE STRAPS PER IRC 2012 EDITION.
7. REFER TO WB.1 FOR WALL BRACING PANEL CONSTRUCTION INFORMATION & TYP. DETAILS

REVIEWED
By Michael Kyne at 2:13 pm, May 23, 2022

APPROVED
Montgomery County
Historic Preservation Commission

GTM ARCHITECTS

7735 OLD GEORGETOWN ROAD
SUITE 700
BETHESDA, MD 20814
(240)333-2000
(240)333-2001 FAX
WWW.GTMARCHITECTS.COM

Seal

I certify that these documents were prepared or approved by me, and that I am a duly licensed architect under the laws of the State of Maryland. License number 8088, Expiration Date: 10.06.2020.

Consultant

Project

21 HIGH STREET
LOT 3

Owner

Developer

PERMIT SET	4-11-2022

Issue Description	*Date*

GTM Project No.	18.0320
Checked By	GTM
Drawn By	LEO/DER
Scale	AS NOTED

Sheet Title

GARAGE ELEVATIONS

Sheet No.

A701

COPYRIGHT, 2022 GTM ARCHITECTS, INC.

FILE NAME:

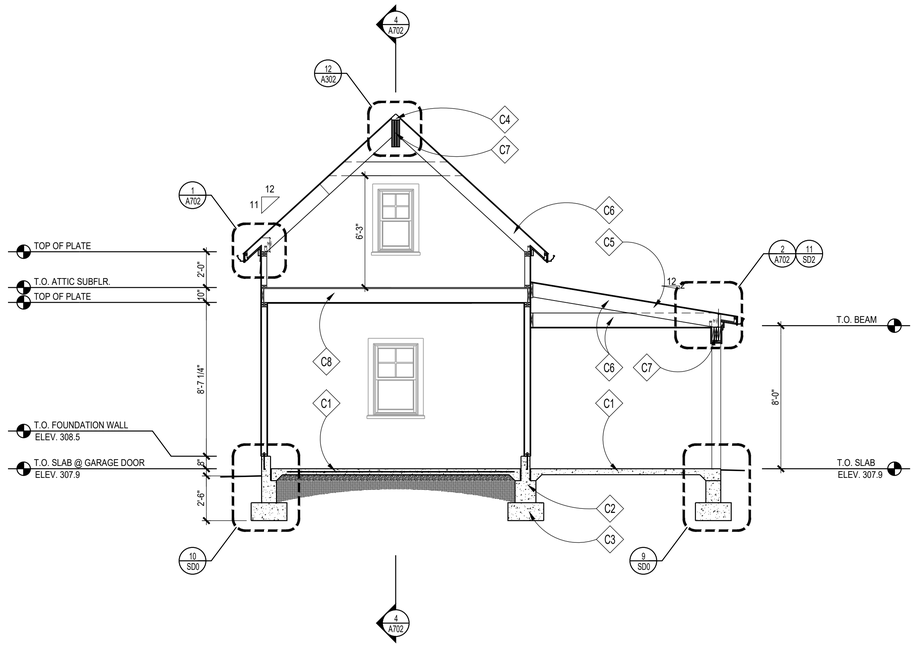

3 BUILDING SECTION

SCALE: 1/4"=1'-0"

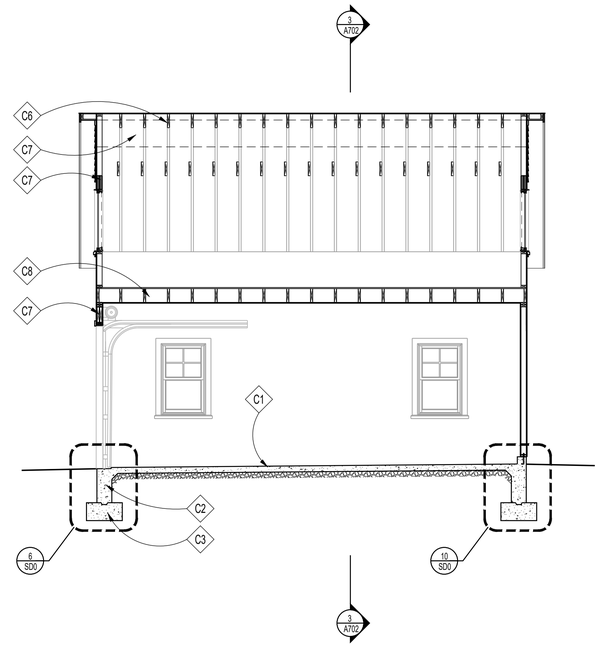

4 BUILDING SECTION

SCALE: 1/4"=1'-0"

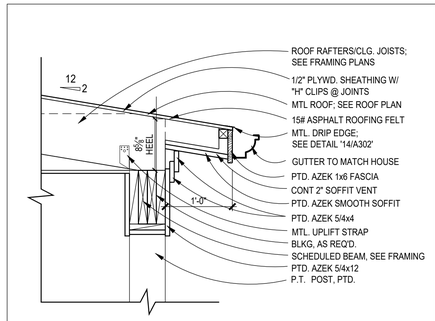

2 CARPORT SOFFIT DETAIL

SCALE: 1" = 1'-0"

(1X1)

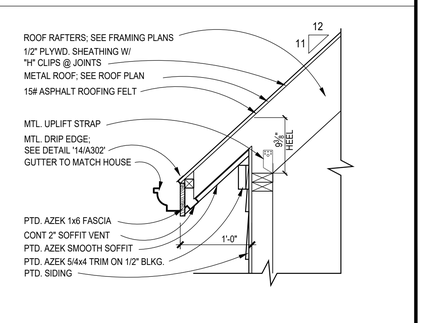

1 GARAGE SOFFIT DETAIL

SCALE: 1" = 1'-0"

(1X1)

CONSTRUCTION NOTES

C1	REINF. CONC. SLAB; SEE FOUNDATION PLAN
C2	CONCRETE FOUNDATION WALL; SEE FOUNDATION PLAN
C3	FOOTING; SEE FOUNDATION PLAN
C4	NOT USED
C5	NOT USED
C6	2x RAFTERS/CEILING JOISTS, SEE FRAMING PLAN
C7	BEAM, SEE FRAMING PLAN
C8	2x10 JOISTS, SEE FRAMING PLAN

REVIEWED
By Michael Kyne at 2:13 pm, May 23, 2022

APPROVED
Montgomery County
Historic Preservation Commission

GTM ARCHITECTS

7735 OLD GEORGETOWN ROAD
SUITE 700
BETHESDA, MD 20814
(240)333-2000
(240)333-2001 FAX
WWW.GTMARCHITECTS.COM

Seal

I certify that these documents were prepared or approved by me, and that I am a duly licensed architect under the laws of the State of Maryland. License number 8888, Expiration Date: 10.06.2022.

Consultant

Project
21 HIGH STREET
LOT 3

Owner

Developer

PERMIT SET	4-11-2022

Issue Description	*Date*

GTM Project No.	18.0320
Checked By	GTM
Drawn By	LEO/DER
Scale	AS NOTED

Sheet Title
GARAGE SECTIONS/ DETAILS

Sheet No.
A702

COPYRIGHT, 2022 GTM ARCHITECTS, INC.

FILE NAME:

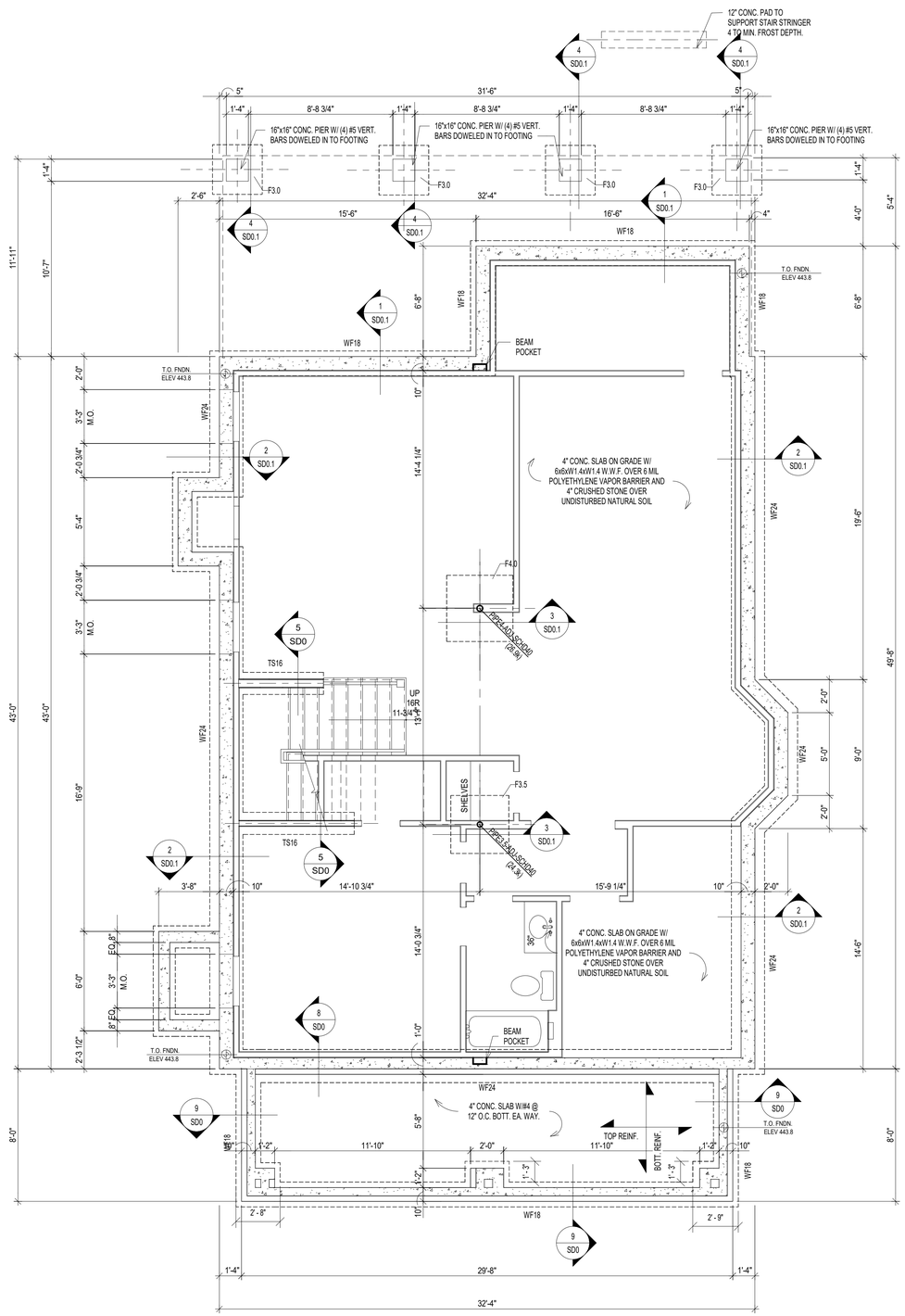

1 / S0 FOUNDATION PLAN
SCALE: 1/4" = 1'-0"

BASEMENT FOUNDATION WALL SCHEDULE (MAX. UNSPPORTED HEIGHT = 9'-0")					
THICKNESS	UNBALANCED BACK FILL HEIGHT	VERTICAL REBARS (E.F.P. = 30 PSF/FT)	VERTICAL REBARS (E.F.P. = 45 PSF/FT)	VERTICAL REBARS (E.F.P. = 60 PSF/FT)	HORIZONTAL REBARS
8"	UP TO 5'-0"	NOT REQD.	NOT REQD.	NOT REQUIRED	#4 @ 24" O.C.
	5'-0" < HT < 6'-0"	NOT REQD.	NOT REQD.	#5 @ 36" O.C.	
	6'-0" < HT < 7'-0"	NOT REQD.	#5 @ 36" O.C.	#5 @ 24" O.C.	
	7'-0" < HT < 8'-0"	#4 @ 24" O.C.	#5 @ 24" O.C.	#5 @ 20" O.C.	
	8'-0" < HT < 9'-0"	#4 @ 18" O.C.	#5 @ 20" O.C.	#5 @ 16" O.C.	

NOTE:
1. BASED ON TABLE 3.12 OF PCA-100 "PRESCRIPTIVE DESIGN OF EXTERIOR CONCRETE WALLS" WITH FOLLOWING CRITERIA
2. f'C' = 3000 psi & Fy = 60000 ksi
3. E.F.P. = EQUIVALENT EARTH PRESSURE
4. MAXIMUM WALL HEIGHT = 9'-0"
5. MIN. COVER TO REINFORCEMENT AT INSIDE FACE = 3/4" & MIN. COVER TO REINFORCEMENT AT OUTSIDE FACE = 1 1/2"
6. PROVIDE MINIMUM ONE #4 REBAR 12" FROM TOP & BOTTOM.
7. PROVIDE PROPER DRAINAGE TO THE BACKFILL REFER TO ARCHITECTURAL DRAWINGS FOR DRAINAGE AND WATEPROOFING
8. REFER TO GEOTECHNICAL REPORT FOR ALL FURTHER RECOMMENDATIONS. GEOTECHNICAL ENGINEER TO VERIFY FOUNDATION DESIGN CRITERIA FOR SOIL BEARING CAPAICTY AND EARTH PRESSURE.
9. REBARS CAN BE SUBSTITUTED WITH #4 REBARS TO MATCH SPECIFIED AREA OF REINFORCEMENT IN ABOVE TABLE

BASEMENT FOUNDATION WALL SCHEDULE (MAX. UNSPPORTED HEIGHT = 9'-0")					
THICKNESS	UNBALANCED BACK FILL HEIGHT	VERTICAL REBARS (E.F.P. = 30 PSF/FT)	VERTICAL REBARS (E.F.P. = 45 PSF/FT)	VERTICAL REBARS (E.F.P. = 60 PSF/FT)	HORIZONTAL REBARS
10"	UP TO 6'-0"	NOT REQD.	NOT REQD.	NOT REQD.	#4 @ 24" O.C.
	6'-0" < HT < 7'-0"	NOT REQD.	NOT REQD.	#4 @ 24" O.C.	
	7'-0" < HT < 8'-0"	NOT REQD.	#4 @ 18" O.C.	#4 @ 18" O.C.	
	8'-0" < HT < 9'-0"	NOT REQD.	#4 @ 16" O.C.	#4 @ 12" O.C.	

NOTE:
1. BASED ON TABLE A.4 OF ACI 332-10 WITH FOLLOWING CRITERIA
2. f'C' = 3000 psi & Fy = 60000 ksi
3. E.F.P. = EQUIVALENT EARTH PRESSURE
4. MAXIMUM WALL HEIGHT = 9'-0"
5. MIN. COVER TO REINFORCEMENT AT INSIDE FACE = 3/4" & MIN. COVER TO REINFORCEMENT AT OUTSIDE FACE = 1 1/2"
6. PROVIDE MINIMUM ONE #4 REBAR 12" FROM TOP & BOTTOM.
7. PROVIDE PROPER DRAINAGE TO THE BACKFILL REFER TO ARCHITECTURAL DRAWINGS FOR DRAINAGE AND WATEPROOFING
8. REFER TO GEOTECHNICAL REPORT FOR ALL FURTHER RECOMMENDATIONS. GEOTECHNICAL ENGINEER TO VERIFY FOUNDATION DESIGN CRITERIA FOR SOIL BEARING CAPAICTY AND EARTH PRESSURE.

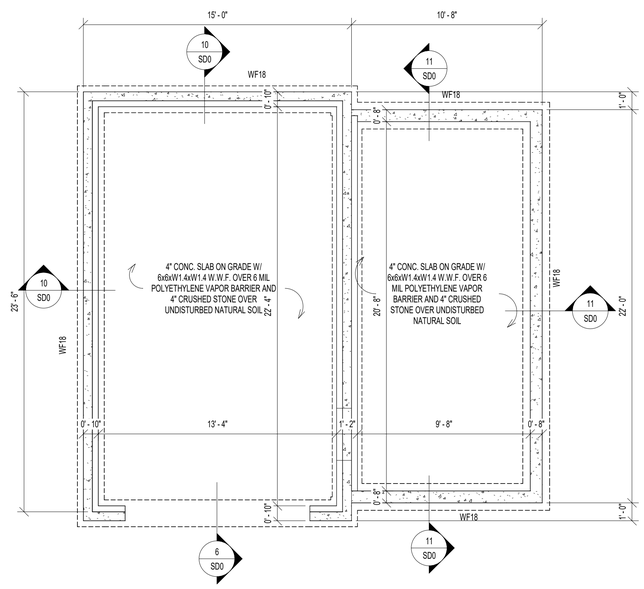

2 / S0 FOUNDATION PLAN @ GARAGE
SCALE: 1/4" = 1'-0"

LEGENDS:

TS = THICKENED SLAB
WF = WALL FOOTING
F = FOOTING

FOUNDATION NOTES:

1. FOUNDATION DESIGN IS BASED ON ASSUMED DESIGN CRITERIA AS SPECIFIED ON GENERAL NOTES SHEET. AND SHALL BE FIELD VERIFIED BY GEOTECHNICAL ENGINEER. NOTIFY ENGINEER IF ANY DESCRIPANCIES ARE FOUND OR CRITERIA DIFFERS FROM ASSUMED CRITERIA.
2. VERIFY AND COORDINATE ALL DIMENSIONS WITH ARCHITECTURAL AND CIVIL DRAWINGS. NOTIFY ENGINEER IF ANY COORINDATION IS REQUIRED.
3. BASEMENT SLAB SHALL BE 4" CONC. SLAB ON GRADE WITH 6x6xW1.4xW1.4 W.W.F.U.N.O.
4. ALL EXTERIOR FOOTINGS SHALL BE LOWERED TO MINMUM FROST DEPTH AS REQUIRED BY LOCAL JURISDICTIONS.
5. PROVIDE MIN. 3'-0"x3'-0"x12" CONC. FOOTING W/ #5 @ 12" O.C. BOTT. EA. WAY. UNDER EACH POST UNLESS NOTED OTHERWISE ON FOUDATION PLAN.
6. PROVIDE MIN. 16"x12" CONC. THICKENED SLAB UNDER BEARING WALLS UNLESS NOTED OTHERWISE.
7. PROVIDE MIN. 24"x8" CONC. WALL FOOTING W/ MIN. (2) #4 CONT. AT BOTT. UNDER ALL FOUNDATION WALLS UNLESS NOTED OTHERWISE.
8. PROVIDE WATERPROOFING, DAMP PROOFING PER APPLICABLE CODES AT FOUNDATION WALL, FOOTINGS AND SLABS.
9. INSTALL CONTINUOUS 4"Ø PERFORATED DRAIN PIPES ON EACH SIDE OF FOOTING. CONNECTED WITH 1 1/2"Ø WEEP HOLES @ 8'-0" O.C. AND DRAIN TO SUMP PUMP OR DAY LIGHT.

PLAN LEGENDS & SYMBOLS:

- INDICATES BEARING WALL
- INDICATES DRAIN HOLE FROM ABOVE
- INDICATES JOIST/TRUSS HANEGR (REFER TO SHOP DWGS)
- INDICATES FRAMING DIRECTION
- INDICATES REBAR DIRECTION
- (_J+_S) — INDICATES NO. OF KING STUDS AT EACH END; INDICATES NO. OF JACK STUDS AT EACH END
- WF?? — INDICATES WALL FOOTING; WIDTH OF WALL FOOTING IN INCHES
- TS?? — INDICATES THICKENED SLAB; WIDTH OF THICKENED SLAB IN INCHES
- Fx.x — INDICATES ISOLATED COLUMN FOOTING; INDICATES SIZE OF FOOTING IN DECIMAL FEET
- ML?? — MICROLAM LVL 2.0E; DEPTH OF MICROLAM LVL IN INCHES
- LSL?? — LAMINATED STRAND LUMBER 1.7E; DEPTH OF TIMBERSTAND LSL BEAM IN INCHES
- PSL?? — PARALLAM STRAND LUMBER 2.0E; WIDTHxDEPTH OF MEMBER
- CC — COLUMN CAP
- CB — COLUMN BASE
- HD — HOLD DOWN ANCHOR
- MS — METAL STRAP
- H — JOIST/TRUSS/BEAM HANGER
- HC — HURRICANE CLIPS

COLUMN FOOTING SCHEDULE

MARK	DESCRIPTION
F3.0	3'-0" x 3'-0" x 12" CONC. FTG W/ #4 @ 12" O.C. BOTT. EA. WAY
F3.5	3'-6" x 3'-6" x 12" CONC. FTG W/ #4 @ 12" O.C. BOTT. EA. WAY
F4.0	4'-0" x 4'-0" x 12" CONC. FTG W/ #5 @ 12" O.C. BOTT. EA. WAY

CONCRETE LINTEL SCHEDULE

MARK	DESCRIPTION
CB812	8" x 12" CONC. LINTEL W/ (2) #5 CONT. @ BOTT.
CB1012	10" x 12" CONC. LINTEL W/ (2) #5 CONT. @ BOTT.

WALL FOOTING SCHEDULE

MARK	DESCRIPTION
TS16	16" x 8" CONC. THICKENED SLAB W/ (2) #4 CONT. @ BOTT.
WF16	16" x 8" CONC. FTG. W/ (2) #4 CONT. @ BOTT.
WF18	18" x 8" CONC. FTG. W/ (2) #4 CONT. @ BOTT.
WF20	20" x 8" CONC. FTG. W/ (2) #4 CONT. @ BOTT.
WF24	24" x 8" CONC. FTG. W/ (2) #4 CONT. @ BOTT.

REVIEWED
By Michael Kyne at 2:13 pm, May 23, 2022

APPROVED
Montgomery County
Historic Preservation Commission

© COPYRIGHT 2016
Structural Engineering content of this drawings are property of structBIM LLC and are issued for this project only. Any re-use or re-production of these drawings shall not be done without written consent of structBIM LLC. These drawings are to be read in conjuction with project specifications and drawings from other consultants. These drawings shall not be used as shop drawings. Do not scale drawings, use dimensions as specified.

GTM ARCHITECTS

7735 OLD GEORGETOWN ROAD
SUITE 700
BETHESDA, MD 20814
(240)333-2000
(240)333-2001 FAX
WWW.GTMARCHITECTS.COM

Seal

STATE OF MARYLAND — MICHAEL KANDIS — 40082 — PROFESSIONAL ENGINEER

Consultant

structBIM ENGINEERS
WE DESIGN....WE BIM
46400 BENEDICT DR, SUITE #211
PHONE: 703-657-4481
E-MAIL: info@structBIM.com

Project

21 HIGH STREET, LOT 3
BROOKVILLE, MD 20833

I certify that these documents were prepared or approved by me, and that I am a duly licensed Professional Engineer under the laws of the State of Maryland, license number 40082, Expiration Date: 02-13-2023.

Issue Description	*Date*

structBIM Project No.	21-0245
Checked By	KK
Drawn By	KK
Scale	1/4" = 1'-0"

Sheet Title

FOUNDATION PLAN

Sheet No.

S0

COPYRIGHT, 2016 structBIMEngineers, LLC.
PLOTTED ON: 4/18/2022 12:49:38 PM

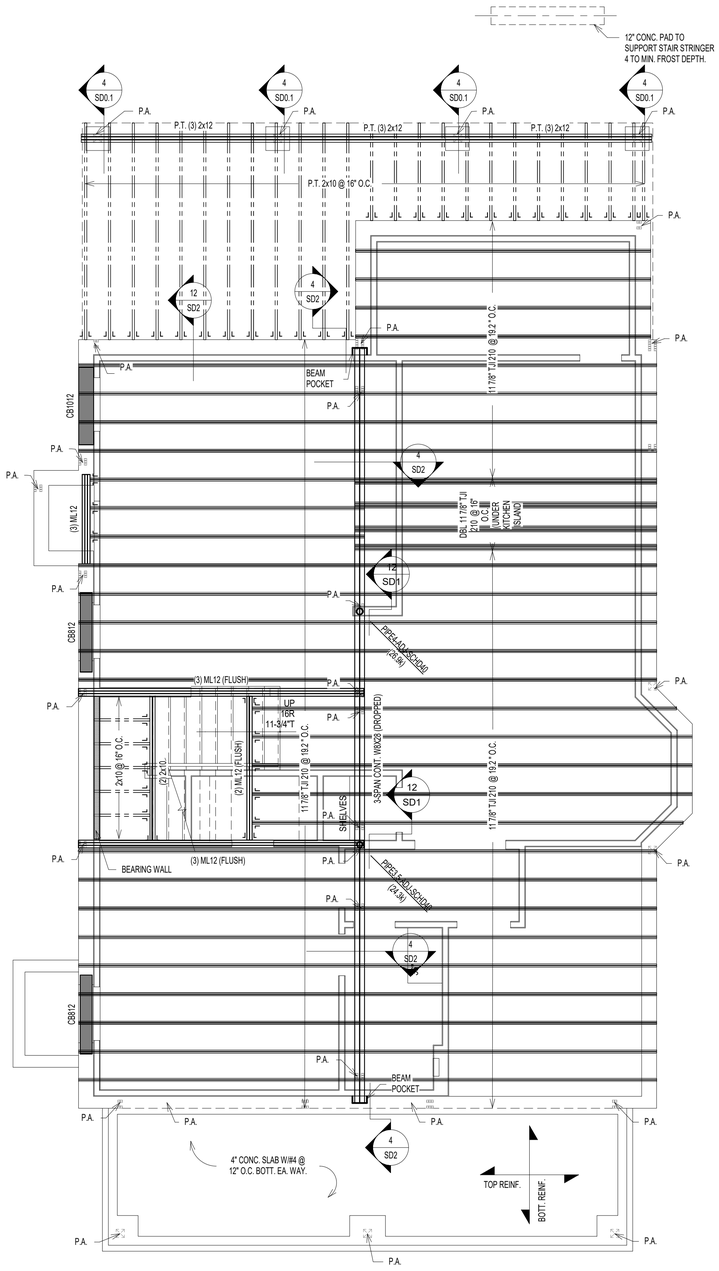

1 S1 FIRST FLOOR FRAMING PLAN
SCALE: 1/4" = 1'-0"

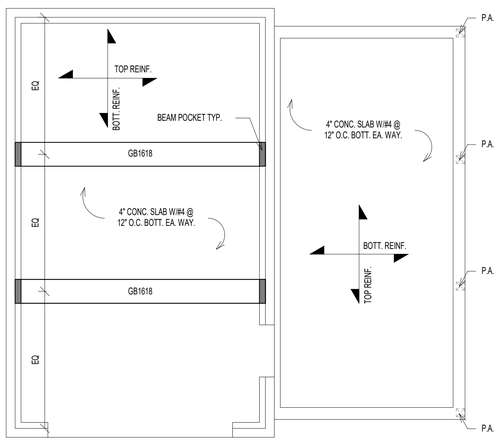

2 S1 FIRST FLOOR FRAMING PLAN @ GARAGE
SCALE: 1/4" = 1'-0"

MICROLAM LVL BEAM SCHEDULE	
MARK	DESCRIPTION
(2) ML10	(2) 1 3/4" x 9 1/2" LVL - 1.9E
(2) ML12	(2) 1 3/4" x 11 7/8" LVL - 1.9E
(3) ML10	(3) 1 3/4" x 9 1/2" LVL - 1.9E
(3) ML12	(3) 1 3/4" x 11 7/8" LVL - 1.9E
(3) ML14	(3) 1 3/4" x 14" LVL - 1.9E
(3) ML18	(3) 1 3/4" x 18" LVL - 1.9E
(4) ML10	4) 1 3/4" x 9 1/2" LVL - 1.9E

PARALLAM PSL BEAM SCHEDULE	
MARK	DESCRIPTION

PARALLAM PSL POST SCHEDULE	
MARK	DESCRIPTION
PSL66	5 1/4" x 5 1/4" PSL 1.8E

STEEL COLUMN SCHEDULE	
MARK	DESCRIPTION
PIPE3.5-ADJ-SCHD40	3 1/2"Ø (O.D.) SCHEDULE 40 ADJUSTABLE STEEL PIPE COLUMN
PIPE4-ADJ-SCHD40	4"Ø (O.D.) SCHEDULE 40 ADJUSTABLE STEEL PIPE COLUMN

NOTES:

1. FLOOR JOISTS SHALL BE SPACED @ 16" O.C. UNLESS NOTED OTHERWISE.
2. (J) INDICATED JACK STUDS & (S) INDICATES KING STUDS. EXAMPLE: 1J+1S = ONE JACK STUD & ONE KING STUD AT EACH END OF SPECIFIED HEADER.
3. FLOOR SHEATHING SHALL BE 3/4" APA RATED 3/4" T&G PLYWOOD WITH SPAN RATING OF 48/24 OR STURD-I-FLOOR WITH 24" O.C. GRADE.
4. WALL SHEATHING SHALL BE 7/16" APA RATED OSB/PLYWOOD CONTINUOUS SHEATHING W/ 8d NAILS @ 6" O.C.ON EDGES AND 12" O.C. IN-FIELD.
5. INSTALL BRIDGING BETWEEN JOISTS AT MID-SPAN OR AS REQUIRED PER MANUFACTURER BRIDGING BETWEEN JOISTS UNDER KITCHEN PLATFORMS AND CERAMIC TILE AREAS FOR MIN.THREE JOIST BAYS @ 8'-0" O.C. MAX.
6. FLOOR JOISTS SHALL HAVE 1/2" GYPSUM BOARD CEILING ATTACHED DIRECTLY TO UNDERSIDE OF BOTTOM FLANGE OF JOIST. NOTIFY ENGINEER OF ANY UNFINISHED AREAS.
7. ALL JOISTS ARE DESIGNED PER MIN. PRO RATING (BASED ON LEVEL WEYERHAEUSER PRO RATING CRITERIA) CRITERIA OF 38. NOTIFY ENGINEER, IF HIGHER PRO RATING IS REQURED.
8. INSTALL SQUASH BLOCKS AT EVERY BEARING LOCATION AND PROVIDE SOLID BLOCKING UNDER EVERY BEARING WALL FROM ABOVE AT ALL I JOISTS.
9. PROVIDE JOISTS AT MAX. 16" O.C. SPACING UNDER CERAMIC TILE AREAS. JOIST MANUFACTURER TO DESIGN JOISTS FOR DEFLECTION LIMIT OF L/720 OR 0.3" MAX. COORDINATE LOCATION OF CERAMIC TILE AREAS WITH ARCHITECTURAL DRAWINGS.
10. PROVIDE DOUBLE JOISTS UNDER KITCHEN ISLANDS. OVERSIZED BATH TUBS.
11. WEB STIFFENERS ARE REQUIRED WHEN INTERMEDIATE BEARING LENGTH IS LESS THAN 5 1/4" AND SPAN ON EITHER SIDE OF BEARING IS LARGER THAN REQUIRED PER JOIST MANUFACTURER.
12. PROTECT ALL UNTREATED WOOD FROM DIRECT CONTACT WITH CONCRETE OR MASONRY.
13. PROVIDE SQUASH BLOCKS ON BOTH SIDES AT BEARING WALL LOCATIONS WITH ONE 10d NAILS AT EACH FLANGE.
14. PROVIDE BLOCKING PANELS PER MANUFACTURER'S SPECIFICATIONS, IF JOISTS ARE SUPPORTING SHEAR WALL FROM ABOVE.
15. PROVIDE SOLID BLOCKING BETWEEN JOISTS WHEN SUPPORTING BEARING WALL FROM ABOVE.
16. PROVIDE BACKER/FILLER BLOCKS AS RECOMMENDED BY JOIST MANUFACTURER AT CONNECTION LOCATIONS OR MULTIPLE JOISTS SUPPORTING POSTS FROM ABOVE.
17. DO NOT CUT HOLES OR NOTCHES WITHOUT PRIOR APPROVAL FROM ENGINEER OR JOIST MANUFACTURER.
18. PROVIDE SOLID BLOCKING OF SAME SIZE WITHIN FLOOR SYSTEM UNDER ALL JACK STUDS, KING STUDS & POSTS FROM ABOVE.
19. PROVIDE MIN. (2) 2x12 UP TO 4'-0" SPAN, (2) ML10 FOR 4'-0" TO 6'-0" SPAN, (2) ML12 6'-0" TO 9'-0" SPAN WHERE BEAM SIZES ARE NOT SPECIFIED ON PLANS. ANY SPANS LARGER THAN 9'-0" SUPPORTING FRAMING AND NOT SPECIFIED ON PLANS SHALL BE NOTIFIED TO ENGINEER IMMEDIATELY.
20. PROVIDE MIN. DOUBLE JOISTS OR SPECIAL FLOOR TRUSS UNDER (2) 2x POSTS AND (2) PLY MICROLAM LVL OR SPECIAL FLOOR TRUSS TO MATCH FLOOR THICKNESS UNDER (3) 2x POSTS UNLESS NOTED OTHERWISE ON THE PLAN. CONTRACTOR SHALL NOTIFY ENGINEER FOR SUPPORTING STRUCTURAL MEMBER FOR ALL OTHER POST SIZES COMING FROM ABOVE.
21. PROVIDE MIN. (3) 2x POST UNDER BEAMS UNLESS NOTED OTHERWISE.
22. ALL POSTS SHALL CONTINUE DOWN TO FOUNDATION OR STRUCTURAL MEMBER SUCH AS BEAM/GIRDER TRUSS BELOW.
23. PROVIDE MIN. 3 JACK STUDS + 2 KING STUDS AT ALL HEADERS UNLESS NOTED OTHERWISE.
24. ALL WALL STUDS SHALL SPF#2 AND SHALL BE SPACED AT MAX. 16" O.C. UNLESS NOTED OTHERWISE.
25. ALL TWO STORY HIGH WALLS SHALL BE (2) 2x6 SPF#2 BALLOON FRAMED UNLESS NOTED OTHERWISE.
26. PROVIDE FULL HEIGHT BLOCKING BETWEEN JOISTS UP TO THREE JOIST BAYS WHERE JOISTS ARE PARALLEL TO FOUNDATION WALL.

PLAN LEGENDS & SYMBOLS:

- INDICATES BEARING WALL
- INDICATES DRAIN HOLE FROM ABOVE
- INDICATES JOIST/TRUSS HANEGR (REFER TO SHOP DWGS)
- INDICATES FRAMING DIRECTION
- INDICATES REBAR DIRECTION
- (_J+_S) — INDICATES NO. OF KING STUDS AT EACH END; INDICATES NO. OF JACK STUDS AT EACH END
- WF?? — INDICATES WALL FOOTING; WIDTH OF WALL FOOTING IN INCHES
- TS?? — INDICATES THICKENED SLAB; WIDTH OF THICKENED SLAB IN INCHES
- Fx.x — INDICATES ISOLATED COLUMN FOOTING; INDICATES SIZE OF FOOTING IN DECIMAL FEET
- ML?? — MICROLAM LVL 2.0E; DEPTH OF MICROLAM LVL IN INCHES
- LSL?? — LAMINATED STRAND LUMBER 1.7E; DEPTH OF TIMBERSTAND LSL BEAM IN INCHES
- PSL?? — PARALLAM STRAND LUMBER 2.0E; WIDTHxDEPTH OF MEMBER
- CC — COLUMN CAP
- CB — COLUMN BASE
- HD — HOLD DOWN ANCHOR
- MS — METAL STRAP
- H — JOIST/TRUSS/BEAM HANGER
- HC — HURRICANE CLIPS

REVIEWED
By Michael Kyne at 2:13 pm, May 23, 2022

APPROVED
Montgomery County
Historic Preservation Commission

© COPYRIGHT 2016
Structural Engineering content of this drawings are property of structBIM LLC and are issued for this project only. Any re-use or re-production of these drawings shall not be done without written consent of structBIM LLC. These drawings are to be read in conjuction with project specifications and drawings from other consultants. These drawings shall not be used as shop drawings. Do not scale drawings, use dimensions as specified.

GTM ARCHITECTS
7735 OLD GEORGETOWN ROAD
SUITE 700
BETHESDA, MD 20814
(240)333-2000
(240)333-2001 FAX
WWW.GTMARCHITECTS.COM

Seal

STATE OF MARYLAND — SHAH KAMAL — 40082 — PROFESSIONAL ENGINEER

Consultant

structBIM ENGINEERS
WE DESIGN....WE BIM
46400 BENEDICT DR, SUITE #211
PHONE: 703-657-4481
E-MAIL: info@structBIM.com

Project

21 HIGH STREET, LOT 3
BROOKVILLE, MD 20833

I certify that these documents were prepared or approved by me, and that I am a duly licensed Professional Engineer under the laws of the State of Maryland, license number 40082, Expiration Date: 02-13-2023.

Issue Description	*Date*

structBIM Project No.	21-0245
Checked By	KK
Drawn By	KK
Scale	1/4" = 1'-0"

Sheet Title
FIRST FLOOR FRAMING PLAN

Sheet No.
S1

COPYRIGHT, 2016 structBIMEngineers, LLC.
PLOTTED ON: 4/18/2022 12:46:42 PM
FILE NAME:

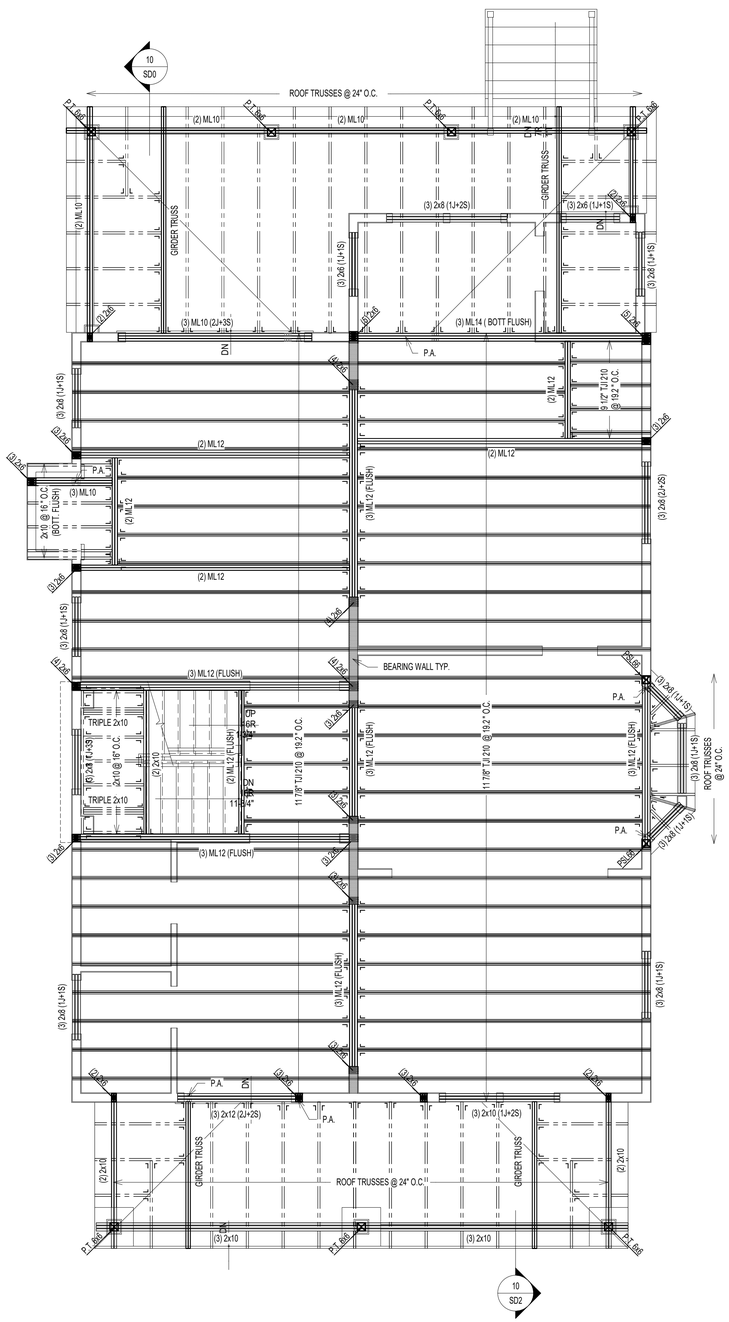

1 / S2 SECOND FLOOR FRAMING PLAN

SCALE: 1/4" = 1'-0"

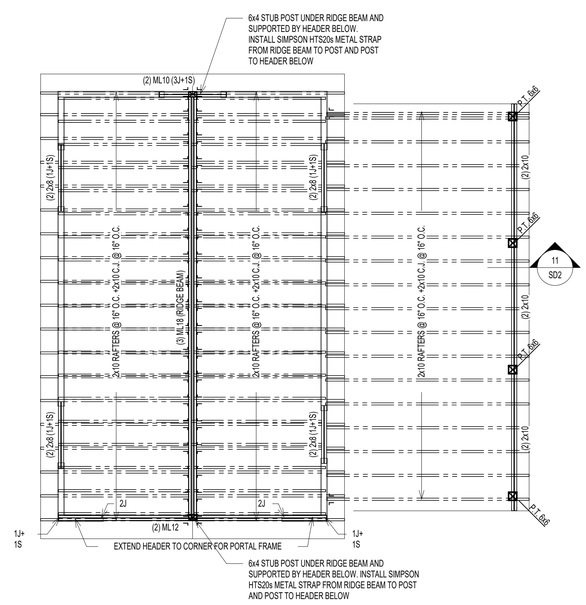

2 / S2 SECOND FLOOR FRAMING PLAN @ GARAGE

SCALE: 1/4" = 1'-0"

REVIEWED
By Michael Kyne at 2:13 pm, May 23, 2022

APPROVED
Montgomery County
Historic Preservation Commission

NOTES:

1. FLOOR JOISTS SHALL BE SPACED @ 16" O.C. UNLESS NOTED OTHERWISE.
2. (J) INDICATED JACK STUDS & (S) INDICATES KING STUDS. EXAMPLE: 1J+1S = ONE JACK STUD & ONE KING STUD AT EACH END OF SPECIFIED HEADER.
3. FLOOR SHEATHING SHALL BE 3/4" APA RATED 3/4" T&G PLYWOOD WITH SPAN RATING OF 48/24 OR STURD-I-FLOOR WITH 24" O.C. GRADE.
4. WALL SHEATHING SHALL BE 7/16" APA RATED OSB/PLYWOOD CONTINUOUS SHEATHING W/ 8d NAILS @ 6" O.C.ON EDGES AND 12" O.C. IN-FIELD.
5. INSTALL BRIDGING BETWEEN JOISTS AT MID-SPAN OR AS REQUIRED PER MANUFACTURER BRIDGING BETWEEN JOISTS UNDER KITCHEN PLATFORMS AND CERAMIC TILE AREAS FOR MIN.THREE JOIST BAYS @ 8'-0" O.C. MAX.
6. FLOOR JOISTS SHALL HAVE 1/2" GYPSUM BOARD CEILING ATTACHED DIRECTLY TO UNDERSIDE OF BOTTOM FLANGE OF JOIST. NOTIFY ENGINEER OF ANY UNFINISHED AREAS.
7. ALL JOISTS ARE DESIGNED PER MIN. PRO RATING (BASED ON I-LEVEL WEYERHAEUSER PRO RATING CRITERIA) CRITERIA OF 38. NOTIFY ENGINEER, IF HIGHER PRO RATING IS REQUIRED.
8. INSTALL SQUASH BLOCKS AT EVERY BEARING LOCATION AND PROVIDE SOLID BLOCKING UNDER EVERY BEARING WALL FROM ABOVE AT ALL JOISTS.
9. PROVIDE JOISTS AT MAX. 16" O.C. SPACING UNDER CERAMIC TILE AREAS. JOIST MANUFACTURER TO DESIGN JOISTS FOR DEFLECTION LIMIT OF L/720 OR 0.3" MAX. COORDINATE LOCATION OF CERAMIC TILE AREAS WITH ARCHITECTURAL DRAWINGS.
10. PROVIDE DOUBLE JOISTS UNDER KITCHEN ISLANDS. OVERSIZED BATH TUBS.
11. WEB STIFFENERS ARE REQUIRED WHEN INTERMEDIATE BEARING LENGTH IS LESS THAN 5 1/4" AND SPAN ON EITHER SIDE OF BEARING IS LARGER THAN REQUIRED PER JOIST MANUFACTURER.
12. PROTECT ALL UNTREATED WOOD FROM DIRECT CONTACT WITH CONCRETE OR MASONRY.
13. PROVIDE SQUASH BLOCKS ON BOTH SIDES AT BEARING WALL LOCATIONS WITH ONE 10d NAILS AT EACH FLANGE.
14. PROVIDE BLOCKING PANELS PER MANUFACTURER'S SPECIFICATIONS, IF JOISTS ARE SUPPORTING SHEAR WALL FROM ABOVE.
15. PROVIDE SOLID BLOCKING BETWEEN JOISTS WHEN SUPPORTING BEARING WALL FROM ABOVE.
16. PROVIDE BACKER/FILLER BLOCKS AS RECOMMENDED BY JOIST MANUFACTURER AT CONNECTION LOCATIONS OR MULTIPLE JOISTS SUPPORTING POSTS FROM ABOVE.
17. DO NOT CUT HOLES OR NOTCHES WITHOUT PRIOR APPROVAL FROM ENGINEER OR JOIST MANUFACTURER.
18. PROVIDE SOLID BLOCKING OF SAME SIZE WITHIN FLOOR SYSTEM UNDER ALL JACK STUDS, KING STUDS & POSTS FROM ABOVE.
19. PROVIDE MIN. (2) 2x12 UP TO 4'-0" SPAN, (2) ML10 FOR 4'-0" TO 6'-0" SPAN, (2) ML12 6'-0" TO 9'-0" SPAN WHERE BEAM SIZES ARE NOT SPECIFIED ON PLANS. ANY SPANS LARGER THAN 9'-0" SUPPORTING FRAMING AND NOT SPECIFIED ON PLANS SHALL BE NOTIFIED TO ENGINEER IMMEDIATELY.
20. PROVIDE MIN. DOUBLE JOISTS OR SPECIAL FLOOR TRUSS UNDER (2) 2x POSTS AND (2) PLY MICROLAM LVL OR SPECIAL FLOOR TRUSS TO MATCH FLOOR THICKNESS UNDER (3) 2x POSTS UNLESS NOTED OTHERWISE ON THE PLAN. CONTRACTOR SHALL NOTIFY ENGINEER FOR SUPPORTING STRUCTURAL MEMBER FOR ALL OTHER POST SIZES COMING FROM ABOVE.
21. PROVIDE MIN. (3) 2x POST UNDER BEAMS UNLESS NOTED OTHERWISE.
22. ALL POSTS SHALL CONTINUE DOWN TO FOUNDATION OR STRUCTURAL MEMBER SUCH AS BEAM/GIRDER TRUSS BELOW.
23. PROVIDE MIN. 3 JACK STUDS + 2 KING STUDS AT ALL HEADERS UNLESS NOTED OTHERWISE.
24. ALL WALL STUDS SHALL SPF#2 AND SHALL BE SPACED AT MAX. 16" O.C. UNLESS NOTED OTHERWISE.
25. ALL TWO STORY HIGH WALLS SHALL BE (2) 2x6 SPF#2 BALLOON FRAMED UNLESS NOTED OTHERWISE.
26. PROVIDE FULL HEIGHT BLOCKING BETWEEN JOISTS UP TO THREE JOIST BAYS WHERE JOISTS ARE PARALLEL TO FOUNDATION WALL.

PLAN LEGENDS & SYMBOLS:

- INDICATES BEARING WALL
- INDICATES DRAIN HOLE FROM ABOVE
- INDICATES JOIST/TRUSS HANEGR (REFER TO SHOP DWGS)
- INDICATES FRAMING DIRECTION
- INDICATES REBAR DIRECTION
- (_J+_S) — INDICATES NO. OF KING STUDS AT EACH END; INDICATES NO. OF JACK STUDS AT EACH END
- WF?? — INDICATES WALL FOOTING; WIDTH OF WALL FOOTING IN INCHES
- TS?? — INDICATES THICKENED SLAB; WIDTH OF THICKENED SLAB IN INCHES
- Fx.x — INDICATES ISOLATED COLUMN FOOTING; INDICATES SIZE OF FOOTING IN DECIMAL FEET
- ML?? — MICROLAM LVL 2.0E; DEPTH OF MICROLAM LVL IN INCHES
- LSL?? — LAMINATED STRAND LUMBER 1.7E; DEPTH OF TIMBERSTAND LSL BEAM IN INCHES
- PSL?? — PARALLAM STRAND LUMBER 2.0E; WIDTHxDEPTH OF MEMBER
- CC — COLUMN CAP
- CB — COLUMN BASE
- HD — HOLD DOWN ANCHOR
- MS — METAL STRAP
- H — JOIST/TRUSS/BEAM HANGER
- HC — HURRICANE CLIPS

MICROLAM LVL BEAM SCHEDULE

MARK	DESCRIPTION
(2) ML10	(2) 1 3/4" x 9 1/2" LVL - 1.9E
(2) ML12	(2) 1 3/4" x 11 7/8" LVL - 1.9E
(3) ML10	(3) 1 3/4" x 9 1/2" LVL - 1.9E
(3) ML12	(3) 1 3/4" x 11 7/8" LVL - 1.9E
(3) ML14	(3) 1 3/4" x 14" LVL - 1.9E
(3) ML18	(3) 1 3/4" x 18" LVL - 1.9E
(4) ML10	4) 1 3/4" x 9 1/2" LVL - 1.9E

PARALLAM PSL BEAM SCHEDULE

MARK	DESCRIPTION

PARALLAM PSL POST SCHEDULE

MARK	DESCRIPTION
PSL66	5 1/4" x 5 1/4" PSL 1.8E

STEEL COLUMN SCHEDULE

MARK	DESCRIPTION
PIPE3.5-ADJ-SCHD40	3 1/2"Ø (O.D.) SCHEDULE 40 ADJUSTABLE STEEL PIPE COLUMN
PIPE4-ADJ-SCHD40	4"Ø (O.D.) SCHEDULE 40 ADJUSTABLE STEEL PIPE COLUMN

© COPYRIGHT 2016
Structural Engineering content of this drawings are property of structBIM LLC and are issued for this project only. Any re-use or re-production of these drawings shall not be done without written consent of structBIM LLC. These drawings are to be read in conjuction with project specifications and drawings from other consultants. These drawings shall not be used as shop drawings. Do not scale drawings, use dimensions as specified.

GTM ARCHITECTS

7735 OLD GEORGETOWN ROAD
SUITE 700
BETHESDA, MD 20814
(240)333-2000
(240)333-2001 FAX
WWW.GTMARCHITECTS.COM

GTM

Seal

STATE OF MARYLAND · KISHAL KANDA · 40082 · PROFESSIONAL ENGINEER

Consultant

structBIM ENGINEERS
WE DESIGN....WE BIM
46400 BENEDICT DR, SUITE #211
PHONE: 703-657-4481
E-MAIL: info@structBIM.com

Project

21 HIGH STREET, LOT 3
BROOKVILLE, MD 20833

I certify that these documents were prepared or approved by me, and that I am a duly licensed Professional Engineer under the laws of the State of Maryland, license number 40082, Expiration Date: 02-13-2023.

Issue Description	*Date*

structBIM Project No.	21-0245
Checked By	KK
Drawn By	KK
Scale	1/4" = 1'-0"

Sheet Title
SECOND FLOOR FRAMING PLAN

Sheet No.

S2

COPYRIGHT, 2016 structBIMEngineers, LLC.

PLOTTED ON: 4/19/2022 12:45:47 PM
FILE NAME:

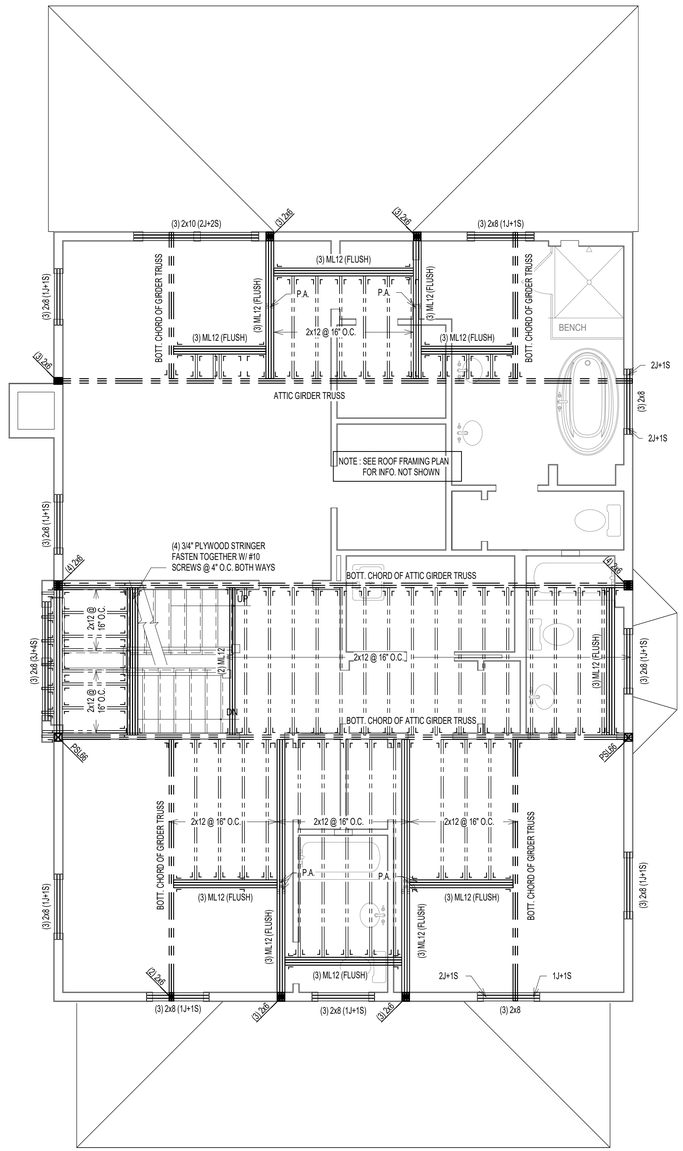

1 / S3 LOFT FLOOR FRAMING PLAN
SCALE: 1/4" = 1'-0"

NOTES:

1. ALL TRUSSES SHALL BE PRE-FABRICATED ENGINEERED ROOF TRUSSES AND SHALL BE INSTALLED PER TRUSS MANUFACTURER'S LAYOUT AND DESIGN. SUBMIT SIGNED AND SEALED SHOP DRAWINGS FOR REVIEW.
2. ALL ROOF SHEATHING SHALL BE APA RATED 7/16" C-C, C-D OR STRUCTURAL II WITH SPAN RATING OF 48/24 PER "AMERICAN PLYWOOD ASSOCIATION". PROVIDE MIN. NAILING PATTERN W/ 8d COMMON NAILS @ 6" O.C. ON EDGES AND 12" O.C. IN FIELD. PROVIDE PLYWOOD CLIPS AT PLYWOOD EDGES BETWEEN EACH FRAMING MEMBER.
3. TRUSS LAYOUT SHOWN ON THESE DRAWINGS ARE FOR SCHEMATIC PURPOSES ONLY AND TO REFLECT DESIGN INTENT FOR OTHER FRAMING MEMBERS. THESE DRAWINGS SHALL NOT BE CONSIDERED AS SHOP DRAWINGS. TRUSS DESIGN DRAWINGS PREPARED BY TRUSS MANUFACTURER SHALL BE USED FOR TRUSS LAYOUT AND COORDINATION. NOTIFY ENGINEER IF VARIATION IS MADE IN TRUSS DESIGN DRAWINGS THAT AFFECTS ORIGINAL DESIGN INTENT.
4. COORDINATE ROOF SLOPES, VALLEYS, HEEL HEIGHTS WITH ARCHITECTURAL DRAWINGS.
5. INSTALL MINIMUM H2.5A HURRICANE CLIPS AT EACH TRUSS BEARING UNLESS SPECIFIED ON SHOP DRAWINGS.
6. AT ALL NON LOAD BEARING WALLS MAINTAIN 1/4" GAP BETWEEN BOTTOM OF TRUSS BOTTOM CHORD AND TOP OF TOP PLATE. INSTALL SIMPSON "STC" TRUSS CLIPS TO MAINTAIN GAP TO ALLOW TRUSS MOVEMENT.
7. ALL SECTIONS/DETAIL CUTS MARKED AS TYP. SHALL BE APPLIED AT ALL SIMILAR CONDITIONS ON ENTIRE PLAN.
8. TRUSS MANUFACTURER TO DESIGN NECESSARY TEMPORARY/PERMENANT BRACING AND SHALL SPECIFY ON SHOP DRAWINGS.
9. TRUSS MANUFACTURER TO SPECIFY NECESSARY CONNECTORS AND FASTENERS FOR ALL CONNECTIONS INCLUDING BUT NOT LIMITED TO UPLIFT CONNECTORS, HANGERS.
10. PROVIDE SOLID BLOCKING OF SAME SIZE WITHIN FLOOR SYSTEM UNDER ALL JACK STUDS, KING STUDS & POSTS FROM ABOVE.
11. PROVIDE MIN. (3) 2x POST UNDER ALL GIRDER TRUSSES UNLESS NOTED OTHERWISE.
12. PROVIDE MIN. TWO JACK STUDS + TWO KING STUDS AT ALL HEADERS UNLESS NOTED OTHERWISE.
13. ALL WALL STUDS SHALL BE SPFI#2 OR EQ. APPROVED AND SPACED AT MAX. 16" O.C. UNLESS NOTED OTHERWISE.

PLAN LEGENDS & SYMBOLS:

- INDICATES BEARING WALL
- INDICATES DRAIN HOLE FROM ABOVE
- INDICATES JOIST/TRUSS HANEGR (REFER TO SHOP DWGS)
- INDICATES FRAMING DIRECTION
- INDICATES REBAR DIRECTION
- (_J+_S) — INDICATES NO. OF KING STUDS AT EACH END; INDICATES NO. OF JACK STUDS AT EACH END
- WF?? — INDICATES WALL FOOTING; WIDTH OF WALL FOOTING IN INCHES
- TS?? — INDICATES THICKENED SLAB; WIDTH OF THICKENED SLAB IN INCHES
- F.x.x — INDICATES ISOLATED COLUMN FOOTING; INDICATES SIZE OF FOOTING IN DECIMAL FEET
- ML?? — MICROLAM LVL 2.0E; DEPTH OF MICROLAM LVL IN INCHES
- LSL?? — LAMINATED STRAND LUMBER 1.7E; DEPTH OF TIMBERSTAND LSL BEAM IN INCHES
- PSL?? — PARALLAM STRAND LUMBER 2.0E; WIDTHxDEPTH OF MEMBER
- CC — COLUMN CAP
- CB — COLUMN BASE
- HD — HOLD DOWN ANCHOR
- MS — METAL STRAP
- H — JOIST/TRUSS/BEAM HANGER
- HC — HURRICANE CLIPS

MICROLAM LVL BEAM SCHEDULE

MARK	DESCRIPTION
(2) ML10	(2) 1 3/4" x 9 1/2" LVL - 1.9E
(2) ML12	(2) 1 3/4" x 11 7/8" LVL - 1.9E
(3) ML10	(3) 1 3/4" x 9 1/2" LVL - 1.9E
(3) ML12	(3) 1 3/4" x 11 7/8" LVL - 1.9E
(3) ML14	(3) 1 3/4" x 14" LVL - 1.9E
(3) ML18	(3) 1 3/4" x 18" LVL - 1.9E
(4) ML10	(4) 1 3/4" x 9 1/2" LVL - 1.9E

PARALLAM PSL BEAM SCHEDULE

MARK	DESCRIPTION

PARALLAM PSL POST SCHEDULE

MARK	DESCRIPTION
PSL66	5 1/4" x 5 1/4" PSL 1.8E

STEEL COLUMN SCHEDULE

MARK	DESCRIPTION
PIPE3.5-ADJ-SCHD40	3 1/2"Ø (O.D.) SCHEDULE 40 ADJUSTABLE STEEL PIPE COLUMN
PIPE4-ADJ-SCHD40	4"Ø (O.D.) SCHEDULE 40 ADJUSTABLE STEEL PIPE COLUMN

REVIEWED
By Michael Kyne at 2:13 pm, May 23, 2022

APPROVED
Montgomery County
Historic Preservation Commission

© COPYRIGHT 2016
Structural Engineering content of this drawings are property of structBIM LLC and are issued for this project only. Any re-use or re-production of these drawings shall not be done without written consent of structBIM LLC. These drawings are to be read in conjuction with project specifications and drawings from other consultants. These drawings shall not be used as shop drawings. Do not scale drawings, use dimensions as specified.

GTM ARCHITECTS

7735 OLD GEORGETOWN ROAD
SUITE 700
BETHESDA, MD 20814
(240)333-2000
(240)333-2001 FAX
WWW.GTMARCHITECTS.COM

GTM

Seal

STATE OF MARYLAND — MICHAEL KANE KYNE — 40082 — PROFESSIONAL ENGINEER

Consultant

structBIM ENGINEERS
WE DESIGN....WE BIM
46400 BENEDICT DR, SUITE #211
PHONE: 703-657-4481
E-MAIL: info@structBIM.com

Project

21 HIGH STREET, LOT 3
BROOKVILLE, MD 20833

I certify that these documents were prepared or approved by me, and that I am a duly licensed Professional Engineer under the laws of the State of Maryland, license number 40082, Expiration Date: 02-13-2023.

Issue Description	*Date*

structBIM Project No.	21-0245
Checked By	KK
Drawn By	KK
Scale	1/4" = 1'-0"

Sheet Title
LOFT FLOOR FRAMING PLAN

Sheet No.
S3

COPYRIGHT, 2016 structBIMEngineers, LLC.
PLOTTED ON: 4/13/2022 12:49:50 PM

FILE NAME:

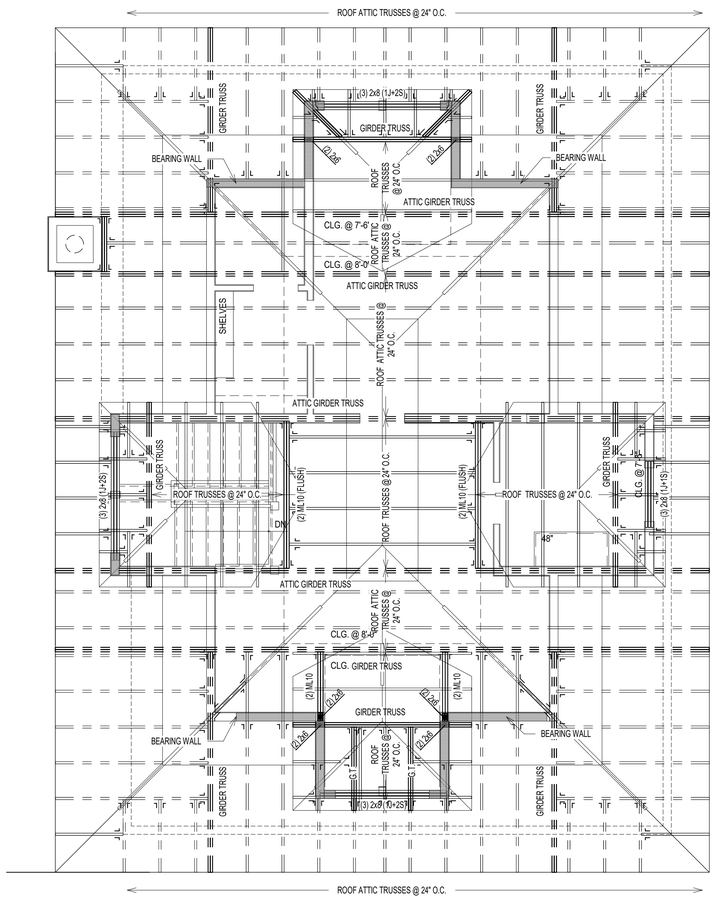

1 / S4 ROOF FRAMING PLAN
SCALE: 1/4" = 1'-0"

NOTES:

1. ALL TRUSSES SHALL BE PRE-FABRICATED ENGINEERED ROOF TRUSSES AND SHALL BE INSTALLED PER TRUSS MANUFACTURER'S LAYOUT AND DESIGN. SUBMIT SIGNED AND SEALED SHOP DRAWINGS FOR REVIEW.
2. ALL ROOF SHEATHING SHALL BE APA RATED 7/16" C-C, C-D OR STRUCTURAL II WITH SPAN RATING OF 48/24 PER "AMERICAN PLYWOOD ASSOCIATION". PROVIDE MIN. NAILING PATTERN W/ 8d COMMON NAILS @ 6" O.C. ON EDGES AND 12" O.C. IN FIELD. PROVIDE PLYWOOD CLIPS AT PLYWOOD EDGES BETWEEN EACH FRAMING MEMBER.
3. TRUSS LAYOUT SHOWN ON THESE DRAWINGS ARE FOR SCHEMATIC PURPOSES ONLY AND TO REFLECT DESIGN INTENT FOR OTHER FRAMING MEMBERS. THESE DRAWINGS SHALL NOT BE CONSIDERED AS SHOP DRAWINGS. TRUSS DESIGN DRAWINGS PREPARED BY TRUSS MANUFACTURER SHALL BE USED FOR TRUSS LAYOUT AND COORDINATION. NOTIFY ENGINEER IF VARIATION IS MADE IN TRUSS DESIGN DRAWINGS THAT AFFECTS ORIGINAL DESIGN INTENT.
4. COORDINATE ROOF SLOPES, VALLEYS, HEEL HEIGHTS WITH ARCHITECTURAL DRAWINGS.
5. INSTALL MINIMUM H2.5A HURRICANE CLIPS AT EACH TRUSS BEARING UNLESS SPECIFIED ON SHOP DRAWINGS.
6. AT ALL NON LOAD BEARING WALLS MAINTAIN 1/4" GAP BETWEEN BOTTOM OF TRUSS BOTTOM CHORD AND TOP OF TOP PLATE. INSTALL SIMPSON "STC" TRUSS CLIPS TO MAINTAIN GAP TO ALLOW TRUSS MOVEMENT.
7. ALL SECTIONS/DETAIL CUTS MARKED AS TYP. SHALL BE APPLIED AT ALL SIMILAR CONDITIONS ON ENTIRE PLAN.
8. TRUSS MANUFACTURER TO DESIGN NECESSARY TEMPORARY/PERMENANT BRACING AND SHALL SPECIFY ON SHOP DRAWINGS.
9. TRUSS MANUFACTURER TO SPECIFY NECESSARY CONNECTORS AND FASTENERS FOR ALL CONNECTIONS INCLUDING BUT NOT LIMITED TO UPLIFT CONNECTORS, HANGERS.
10. PROVIDE SOLID BLOCKING OF SAME SIZE WITHIN FLOOR SYSTEM UNDER ALL JACK STUDS, KING STUDS & POSTS FROM ABOVE.
11. PROVIDE MIN. (3) 2x POST UNDER ALL GIRDER TRUSSES UNLESS NOTED OTHERWISE.
12. PROVIDE MIN. TWO JACK STUDS + TWO KING STUDS AT ALL HEADERS UNLESS NOTED OTHERWISE.
13. ALL WALL STUDS SHALL BE SPF#2 OR EQ. APPROVED AND SPACED AT MAX. 16" O.C. UNLESS NOTED OTHERWISE.

PLAN LEGENDS & SYMBOLS:

- INDICATES BEARING WALL
- INDICATES DRAIN HOLE FROM ABOVE
- INDICATES JOIST/TRUSS HANEGR (REFER TO SHOP DWGS)
- INDICATES FRAMING DIRECTION
- INDICATES REBAR DIRECTION
- (_J+_S) — INDICATES NO. OF KING STUDS AT EACH END; INDICATES NO. OF JACK STUDS AT EACH END
- WF?? — INDICATES WALL FOOTING; WIDTH OF WALL FOOTING IN INCHES
- TS?? — INDICATES THICKENED SLAB; WIDTH OF THICKENED SLAB IN INCHES
- Fx.x — INDICATES ISOLATED COLUMN FOOTING; INDICATES SIZE OF FOOTING IN DECIMAL FEET
- ML?? — MICROLAM LVL 2.0E; DEPTH OF MICROLAM LVL IN INCHES
- LSL?? — LAMINATED STRAND LUMBER 1.7E; DEPTH OF TIMBERSTAND LSL BEAM IN INCHES
- PSL?? — PARALLAM STRAND LUMBER 2.0E; WIDTHxDEPTH OF MEMBER
- CC — COLUMN CAP
- CB — COLUMN BASE
- HD — HOLD DOWN ANCHOR
- MS — METAL STRAP
- H — JOIST/TRUSS/BEAM HANGER
- HC — HURRICANE CLIPS

MICROLAM LVL BEAM SCHEDULE

MARK	DESCRIPTION
(2) ML10	(2) 1 3/4" x 9 1/2" LVL - 1.9E
(2) ML12	(2) 1 3/4" x 11 7/8" LVL - 1.9E
(3) ML10	(3) 1 3/4" x 9 1/2" LVL - 1.9E
(3) ML12	(3) 1 3/4" x 11 7/8" LVL - 1.9E
(3) ML14	(3) 1 3/4" x 14" LVL - 1.9E
(3) ML18	(3) 1 3/4" x 18" LVL - 1.9E
(4) ML10	4) 1 3/4" x 9 1/2" LVL - 1.9E

PARALLAM PSL BEAM SCHEDULE

MARK	DESCRIPTION

PARALLAM PSL POST SCHEDULE

MARK	DESCRIPTION
PSL66	5 1/4" x 5 1/4" PSL 1.8E

STEEL COLUMN SCHEDULE

MARK	DESCRIPTION
PIPE3.5-ADJ-SCHD40	3 1/2"Ø (O.D.) SCHEDULE 40 ADJUSTABLE STEEL PIPE COLUMN
PIPE4-ADJ-SCHD40	4"Ø (O.D.) SCHEDULE 40 ADJUSTABLE STEEL PIPE COLUMN

REVIEWED
By Michael Kyne at 2:13 pm, May 23, 2022

APPROVED
Montgomery County
Historic Preservation Commission

© COPYRIGHT 2016
Structural Engineering content of this drawings are property of structBIM LLC and are issued for this project only. Any re-use or re-production of these drawings shall not be done without written consent of structBIM LLC. These drawings are to be read in conjuction with project specifications and drawings from other consultants. These drawings shall not be used as shop drawings. Do not scale drawings, use dimensions as specified.

GTM ARCHITECTS

7735 OLD GEORGETOWN ROAD
SUITE 700
BETHESDA, MD 20814
(240)333-2000
(240)333-2001 FAX
WWW.GTMARCHITECTS.COM

GTM

Seal

STATE OF MARYLAND — VISHAL KANOJIA — 40082 — PROFESSIONAL ENGINEER

Consultant

structBIM ENGINEERS
WE DESIGN....WE BIM
46400 BENEDICT DR, SUITE #211
PHONE: 703-657-4481
E-MAIL: info@structBIM.com

Project

21 HIGH STREET, LOT 3
BROOKVILLE, MD 20833

I certify that these documents were prepared or approved by me, and that I am a duly licensed Professional Engineer under the laws of the State of Maryland, license number 40082, Expiration Date: 02-13-2023.

Issue Description	*Date*

structBIM Project No.	21-0245
Checked By	KK
Drawn By	KK
Scale	1/4" = 1'-0"

Sheet Title

ROOF FRAMING PLAN

Sheet No.

S4

COPYRIGHT, 2016 structBIMEngineers, LLC.
PLOTTED ON: 4/15/2022 12:49:53 PM

FILE NAME:

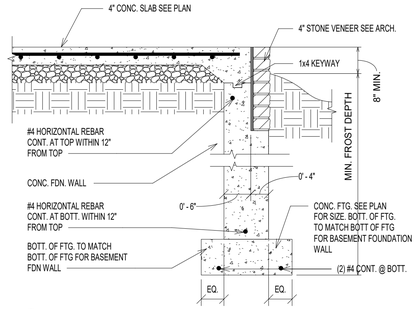

9 / SD0 SD0_12_FNDN_CONC_PORCH1
SCALE: 3/4" = 1'-0"

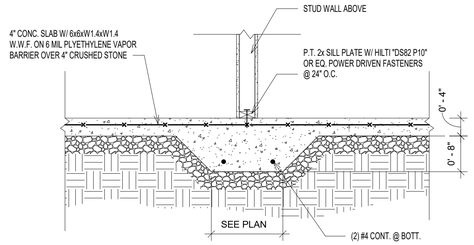

5 / SD0 INT. WALL THICKENED SLAB
SCALE: 3/4" = 1'-0"

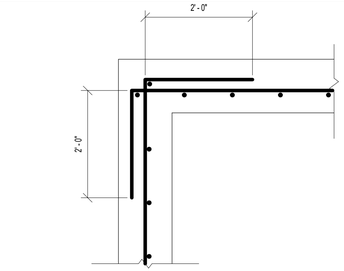

TYP. CORNER REINFORCEMENT DETAIL (PLAN VIEW)

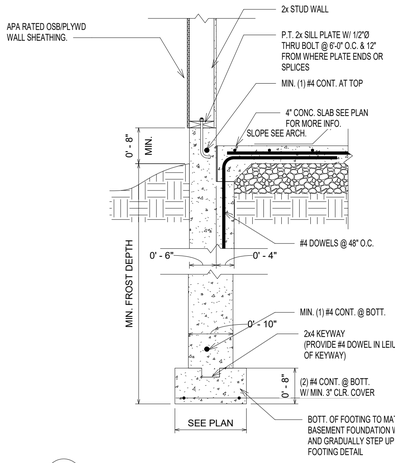

10 / SD0 TYP. FOUNDATION WALL @ GARAGE W/ SIDING
SCALE: 3/4" = 1'-0"

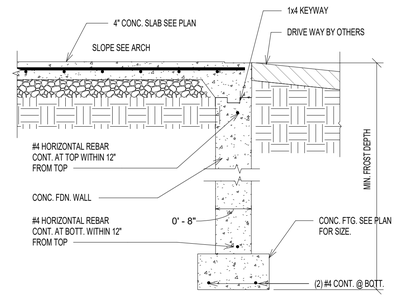

6 / SD0 FOUNDATION WALL @ GARAGE ENTRY
SCALE: 3/4" = 1'-0"

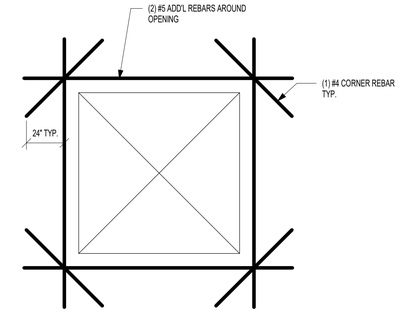

TYP. REINFORCEMENT AROUND OEPNING(ELEVATION VIEW)

1 / SD0 TYP. REINFORCEMENT AT WALL CORNER & OPENING
SCALE: 3/4" = 1'-0"

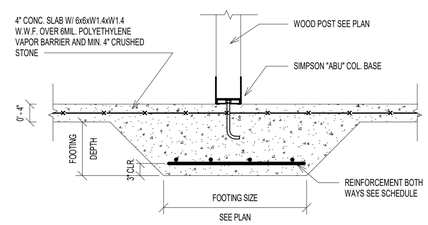

7 / SD0 TYPICAL WOOD COLUMN FOOTING
SCALE: 3/4" = 1'-0"

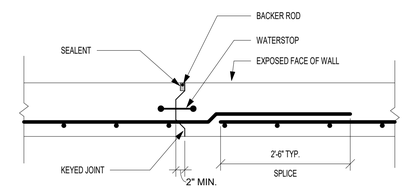

NOTE: PROVIDE CONSTRUCTION OR CONTROL JOINTS IN FOUNDATION WALLS AT EVERY 40'-0" TYPICAL.

2 / SD0 TYP CONTROL JOINT @ FOUNDATION WALL
SCALE: 3/4" = 1'-0"

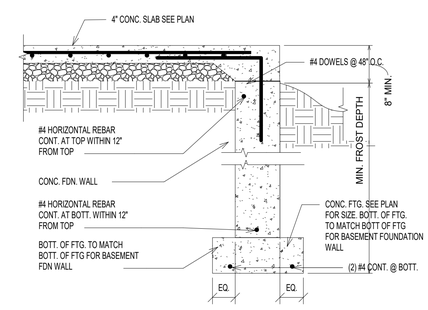

11 / SD0 SECTION
SCALE: 3/4" = 1'-0"

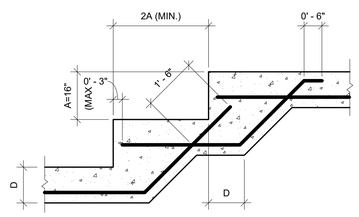

NOTE: SEE PLAN FOR REINFORCING AND OTHER INFO.

3 / SD0 TYP. STEPPED FOOTING DETAIL
SCALE: 1/2" = 1'-0"

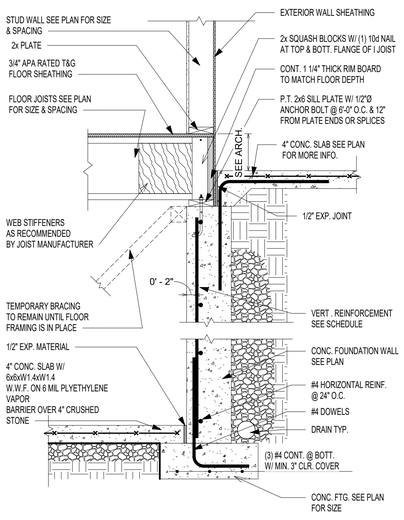

8 / SD0 TYP. FOUNDATION WALL SECTION @ PORCH
SCALE: 3/4" = 1'-0"

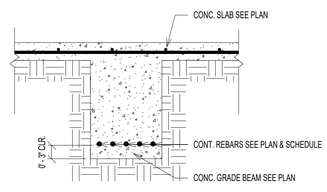

12 / SD0 TYP. GRADE BEAM DETAIL
SCALE: 3/4" = 1'-0"

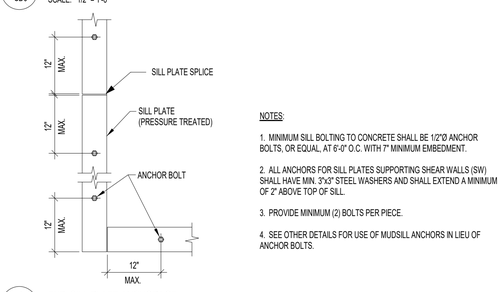

NOTES:

1. MINIMUM SILL BOLTING TO CONCRETE SHALL BE 1/2"Ø ANCHOR BOLTS, OR EQUAL, AT 6'-0" O.C. WITH 7" MINIMUM EMBEDMENT.

2. ALL ANCHORS FOR SILL PLATES SUPPORTING SHEAR WALLS (SW) SHALL HAVE MIN. 3"x3" STEEL WASHERS AND SHALL EXTEND A MINIMUM OF 2" ABOVE TOP OF SILL.

3. PROVIDE MINIMUM (2) BOLTS PER PIECE.

4. SEE OTHER DETAILS FOR USE OF MUDSILL ANCHORS IN LIEU OF ANCHOR BOLTS.

4 / SD0 TYP. SILL PLATE ANCHORAGE
SCALE: 3/4" = 1'-0"

REVIEWED
By Michael Kyne at 2:13 pm, May 23, 2022

APPROVED
Montgomery County
Historic Preservation Commission

© COPYRIGHT 2016
Structural Engineering content of this drawings are property of structBIM LLC and are issued for this project only. Any re-use or re-production of these drawings shall not be done without written consent of structBIM LLC. These drawings are to be read in conjuction with project specifications and drawings from other consultants. These drawings shall not be used as shop drawings. Do not scale drawings, use dimensions as specified.

GTM ARCHITECTS

7735 OLD GEORGETOWN ROAD
SUITE 700
BETHESDA, MD 20814
(240)333-2000
(240)333-2001 FAX
WWW.GTMARCHITECTS.COM

GTM

Seal

STATE OF MARYLAND · KISHAL KANDEL · 40082 · PROFESSIONAL ENGINEER

Consultant

structBIM ENGINEERS
WE DESIGN....WE BIM
46400 BENEDICT DR, SUITE #211
PHONE: 703-657-4481
E-MAIL: info@structBIM.com

Project

21 HIGH STREET, LOT 3
BROOKVILLE, MD 20833

I certify that these documents were prepared or approved by me, and that I am a duly licensed Professional Engineer under the laws of the State of Maryland, license number 40082, Expiration Date: 02-13-2023.

Issue Description	*Date*

structBIM Project No.	21-0245
Checked By	KK
Drawn By	KK
Scale	As indicated

Sheet Title

FOUNDATION DETAILS

Sheet No.

SD0

COPYRIGHT, 2016 structBIMEngineers, LLC.
PLOTTED ON: 4/15/2022 12:49:58 PM

FILE NAME:

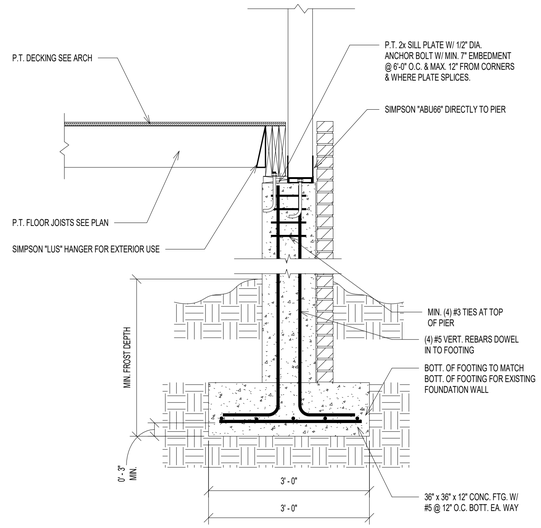

4 SD0.1 SECTION
SCALE: 3/4" = 1'-0"

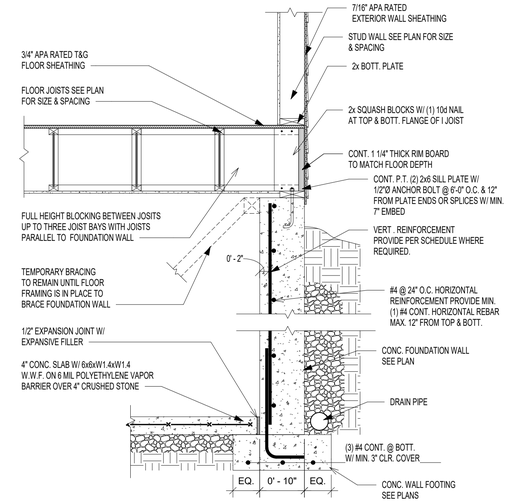

1 SD0.1 TYP. FOUNDATION WALL SECTION
SCALE: 3/4" = 1'-0"

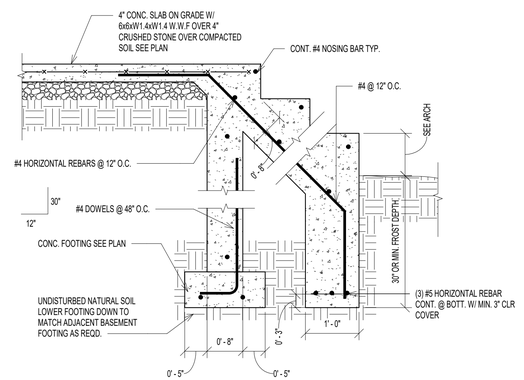

NOTE: VERIFY STEPS AND GRADE WITH ARCHITECTURAL DRAWINGS.

5 SD0.1 STEPS @ PORCH
SCALE: 3/4" = 1'-0"

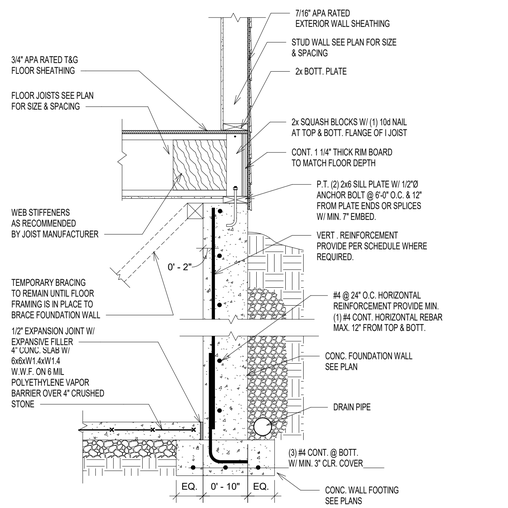

2 SD0.1 TYP. FOUNDATION WALL SECTION
SCALE: 3/4" = 1'-0"

REVIEWED
By Michael Kyne at 2:13 pm, May 23, 2022

APPROVED
Montgomery County
Historic Preservation Commission

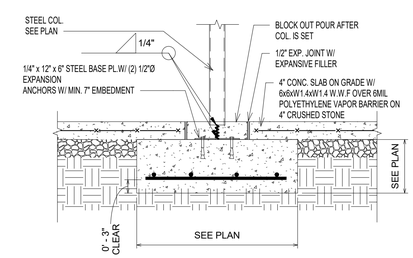

3 SD0.1 ISOLATED COLUMN FOOTING
SCALE: 3/4" = 1'-0"

© COPYRIGHT 2016
Structural Engineering content of this drawings are property of structBIM LLC and are issued for this project only. Any re-use or re-production of these drawings shall not be done without written consent of structBIM LLC. These drawings are to be read in conjuction with project specifications and drawings from other consultants. These drawings shall not be used as shop drawings. Do not scale drawings, use dimensions as specified.

GTM ARCHITECTS

7735 OLD GEORGETOWN ROAD
SUITE 700
BETHESDA, MD 20814
(240)333-2000
(240)333-2001 FAX
WWW.GTMARCHITECTS.COM

Seal

STATE OF MARYLAND · VISHAL KANOJIA · 40082 · PROFESSIONAL ENGINEER

Consultant

structBIM ENGINEERS
WE DESIGN....WE BIM
46400 BENEDICT DR, SUITE #211
PHONE: 703-657-4481
E-MAIL: info@structBIM.com

Project

21 HIGH STREET, LOT 3
BROOKVILLE, MD 20833

I certify that these documents were prepared or approved by me, and that I am a duly licensed Professional Engineer under the laws of the State of Maryland, license number 40082, Expiration Date: 02-13-2023.

Issue Description	*Date*

structBIM Project No.	21-0245
Checked By	KK
Drawn By	KK
Scale	3/4" = 1'-0"

Sheet Title

FOUNDATION DETAILS

Sheet No.

SD0.1

COPYRIGHT, 2016 structBIMEngineers, LLC.
PLOTTED ON: 4/15/2022 12:50:02 PM

FILE NAME:

REVIEWED
By Michael Kyne at 2:13 pm, May 23, 2022

APPROVED
Montgomery County
Historic Preservation Commission

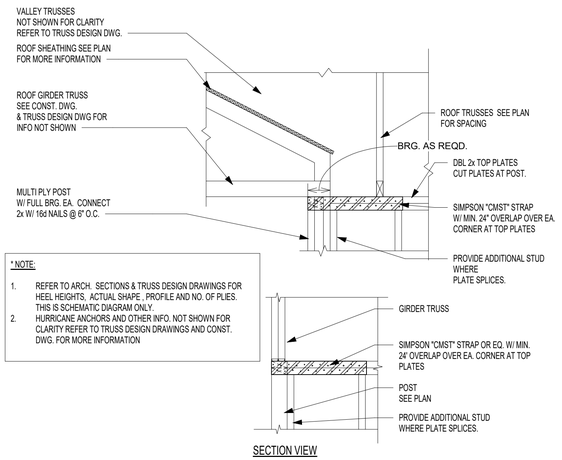

* NOTE:

1. REFER TO ARCH. SECTIONS & TRUSS DESIGN DRAWINGS FOR HEEL HEIGHTS, ACTUAL SHAPE , PROFILE AND NO. OF PLIES. THIS IS SCHEMATIC DIAGRAM ONLY.
2. HURRICANE ANCHORS AND OTHER INFO. NOT SHOWN FOR CLARITY REFER TO TRUSS DESIGN DRAWINGS AND CONST. DWG. FOR MORE INFORMATION

SECTION VIEW

10 / SD1 G.T. W/ FULL BRG ON POST @ CORNER
SCALE: 3/4" = 1'-0"

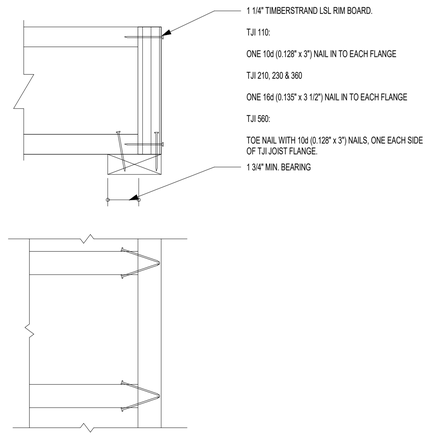

TOP VIEW

7 / SD1 RIM TO TJI JOIST CONNECTION
SCALE: 3/4" = 1'-0"

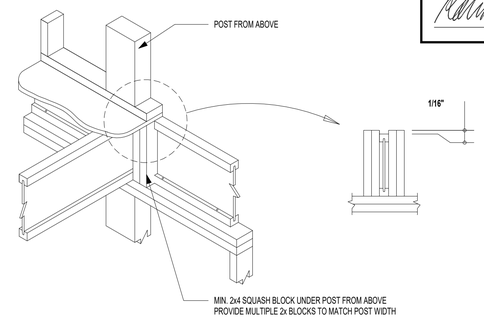

4 / SD1 JOISTS BRG @ EXT. WALL W/ POST ABOVE
SCALE: 3/4" = 1'-0"

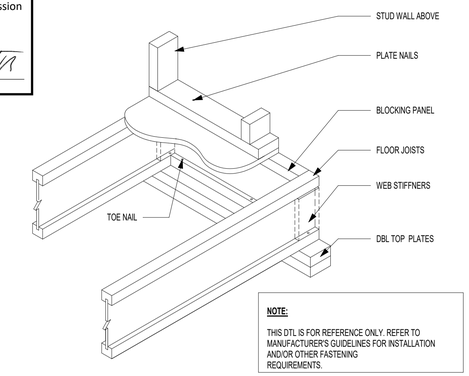

NOTE:

THIS DTL IS FOR REFERENCE ONLY. REFER TO MANUFACTURER'S GUIDELINES FOR INSTALLATION AND/OR OTHER FASTENING REQUIREMENTS.

1 / SD1 I JOIST WITH BRG WALL ABOVE
SCALE: 3/4" = 1'-0"

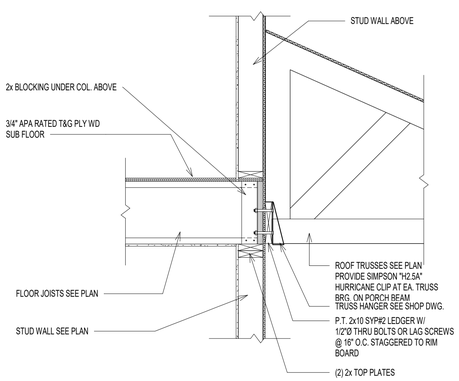

11 / SD1 SECTION @ PORCH
SCALE: 3/4" = 1'-0"

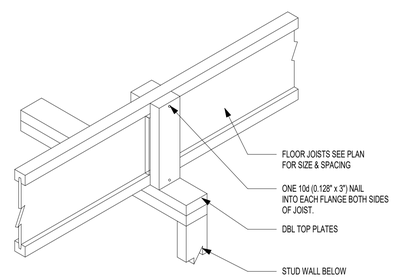

8 / SD1 TYP. SQUASH BLOCKS DETAIL
SCALE: 3/4" = 1'-0"

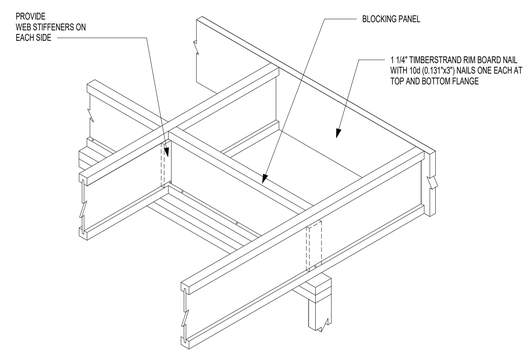

DO NOT CUT FLANGES OR WEB

5 / SD1 CANTILEVER JOIST DETAIL
SCALE: 3/4" = 1'-0"

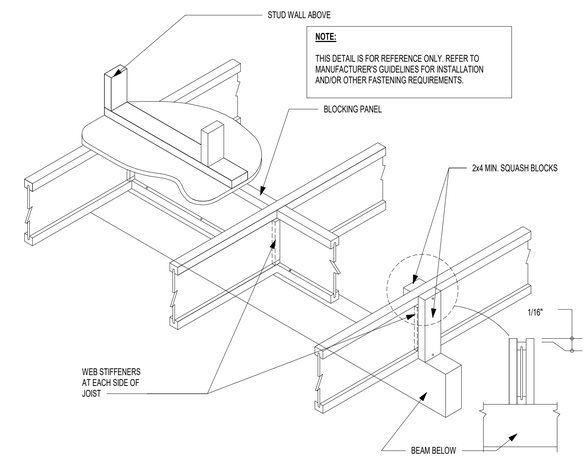

NOTE:

THIS DETAIL IS FOR REFERENCE ONLY. REFER TO MANUFACTURER'S GUIDELINES FOR INSTALLATION AND/OR OTHER FASTENING REQUIREMENTS.

2 / SD1 JOIST W/ INT. BRG. ON BEAM & BRG. WALL FROM ABOVE
SCALE: 3/4" = 1'-0"

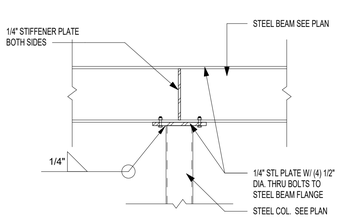

12 / SD1 STEEL BEAM TO STEEL COLUMN - INT. SUPPORT
SCALE: 3/4" = 1'-0"

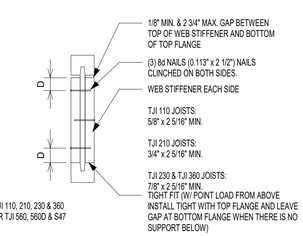

TJI JOIST SERIES	DEPTH	MINIMUM WEB STIFFENER SIZE	NAILING		
			TYPE	END	INTERMEDIATE
110	ALL	5/8" x 2 5/16"	8d (0.113" x 2 1/2")	3	3
210	ALL	3/4" x 2 5/16"			
230 & 360	ALL	7/8" x 2 5/16"			

9 / SD1 TYP. I JOIST WEB STIFFENER SCHEDULE
SCALE: 3/4" = 1'-0"

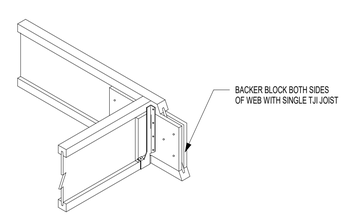

TJI	110		210		230 OR 360		560	
DEPTH	9 1/2" OR 11 7/8"	14"	9 1/2" OR 11 7/8"	14" OR 16"	9 1/2" OR 11 7/8"	14" OR 16"	11 7/8"	14" OR 16"
FILLER BLOCK (1)	2x6	2x8	2x6 + 3/8" SHEATHING	2x8 + 3/8" SHEATHING	2x6 + 1/2" SHEATHING	2x8 + 1/2" SHEATHING	(2) 2x6	(2) 2x8
BACKER BLOCK (1)	5/8" OR 3/4"		3/4" OR 7/8"		7/8" OR 1" NET		2x6	2x8

6 / SD1 SINGLE JOIST TO SINGLE JOIST CONNECTION
SCALE: 3/4" = 1'-0"

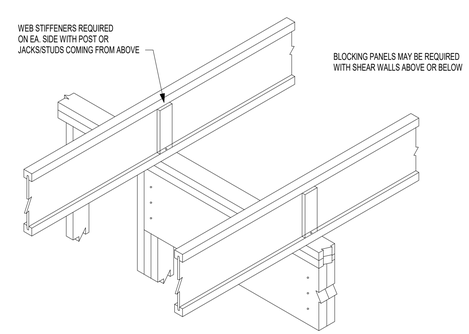

3 / SD1 INTERMEDIATE BEARING
SCALE: 3/4" = 1'-0"

© COPYRIGHT 2016
Structural Engineering content of this drawings are property of structBIM LLC and are issued for this project only. Any re-use or re-production of these drawings shall not be done without written consent of structBIM LLC. These drawings are to be read in conjuction with project specifications and drawings from other consultants. These drawings shall not be used as shop drawings. Do not scale drawings, use dimensions as specified.

GTM ARCHITECTS
7735 OLD GEORGETOWN ROAD
SUITE 700
BETHESDA, MD 20814
(240)333-2000
(240)333-2001 FAX
WWW.GTMARCHITECTS.COM
GTM

Seal

STATE OF MARYLAND · KISHAL KANDEL · 40082 · PROFESSIONAL ENGINEER

Consultant

structBIM ENGINEERS
WE DESIGN....WE BIM
46400 BENEDICT DR, SUITE #211
PHONE: 703-657-4481
E-MAIL: info@structBIM.com

Project

21 HIGH STREET, LOT 3
BROOKVILLE, MD 20833

I certify that these documents were prepared or approved by me, and that I am a duly licensed Professional Engineer under the laws of the State of Maryland, license number 40082, Expiration Date: 02-13-2023.

Issue Description	*Date*

structBIM Project No.	21-0245
Checked By	KK
Drawn By	KK
Scale	3/4" = 1'-0"

Sheet Title

FRAMING DETAILS

Sheet No.

SD1

COPYRIGHT, 2016 structBIMEngineers, LLC.
PLOTTED ON: 4/15/2022 12:50:04 PM

FILE NAME:

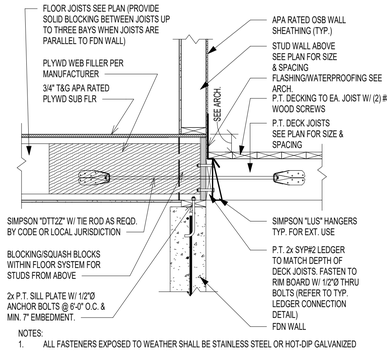

NOTES:
1. ALL FASTENERS EXPOSED TO WEATHER SHALL BE STAINLESS STEEL OR HOT-DIP GALVANIZED OR APPROVED BY MANUFACTURER FOR EXTERIOR USE.

DECK CONNECTORS TABLE (SIMPSON "DTT2Z OR EQ. APPROVED)				
DECK SIZE	6'-0" x 4'-0"	8'-0" x 4'-0"	12'-0" x 10'-0"	20'-0" x 10'-0"
NO. OF CONNECTORS	2	2	2	3

NOTES:
1. NO. OF CONNECTORS SHALL BE PROVIDED SUCH THAT ALL CONNECTORS ARE EQUALLY SPACED.
2. MIN. ONE CONNECTOR SHALL BE PROVIDED AT EACH END OF DECK.

12 / SD2 TYP. DECK CONNECTION DETAIL
SCALE: 3/4" = 1'-0"

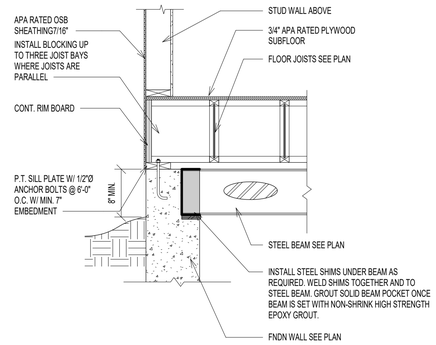

9 / SD2 TYP. STEEL BEAM POCKET DETAIL
SCALE: 3/4" = 1'-0"

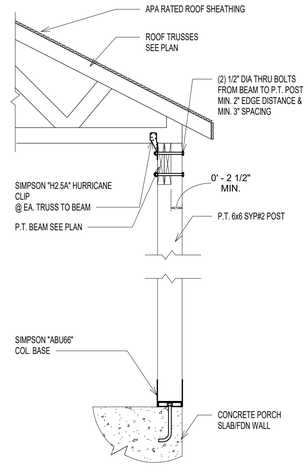

10 / SD2 SECTION AT PORCH ROOF
SCALE: 3/4" = 1'-0"

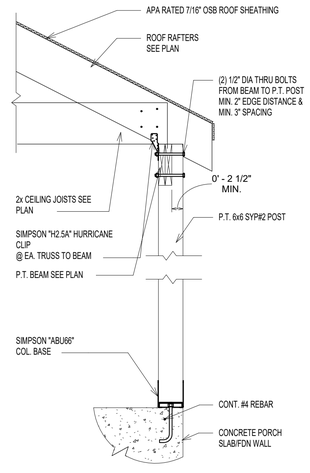

11 / SD2 SECTION AT PORCH ROOF
SCALE: 3/4" = 1'-0"

REVIEWED
By Michael Kyne at 2:13 pm, May 23, 2022

APPROVED
Montgomery County
Historic Preservation Commission

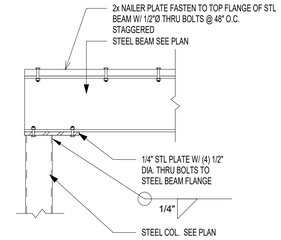

5 / SD2 STEEL BEAM TO STEEL COLUMN - END SUPPORT
SCALE: 3/4" = 1'-0"

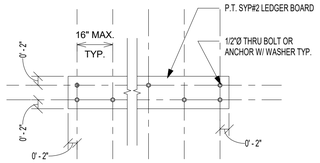

6 / SD2 TYP. DECK CONNECTION DETAIL
SCALE: 3/4" = 1'-0"

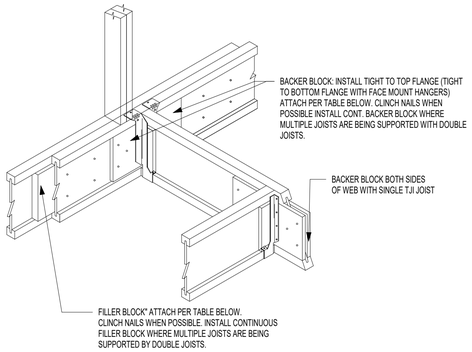

TJI	110		210		230 OR 360		560	
DEPTH	9 1/2" OR 11 7/8"	14"	9 1/2" OR 11 7/8"	14" OR 16"	9 1/2" OR 11 7/8"	14" OR 16"	11 7/8"	14" OR 16"
FILLER BLOCK (1)	2x6	2x8	2x6 + 3/8" SHEATHING	2x8 + 3/8" SHEATHING	2x6 + 1/2" SHEATHING	2x8 + 1/2" SHEATHING	(2) 2x6	(2) 2x8
BACKER BLOCK (1)	5/8" OR 3/4"		3/4" OR 7/8"		7/8" OR 1" NET		2x6	2x8

7 / SD2 TYPICAL DBL JOISTS CONNECTION W/ JOIST SUPPORTED
SCALE: 3/4" = 1'-0"

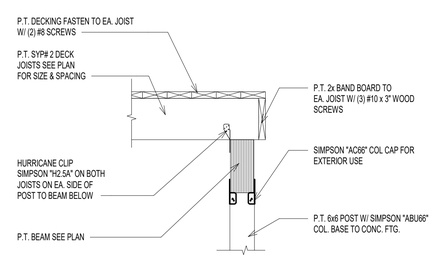

8 / SD2 TYP. DECK POST CONNECTION W/ POST FROM ABOVE
SCALE: 3/4" = 1'-0"

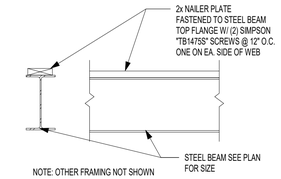

NOTE: OTHER FRAMING NOT SHOWN FOR CLARITY

ALTERNATE FASTENERS:

NAILER PLATE MAY BE FASTENED TO TOP FLANGE W/ 1/2"Ø THRU BOLTS @ 48" O.C. STAGGERED

1 / SD2 TYP. STEEL BEAM NAILER PLATE CONNECTION
SCALE: 3/4" = 1'-0"

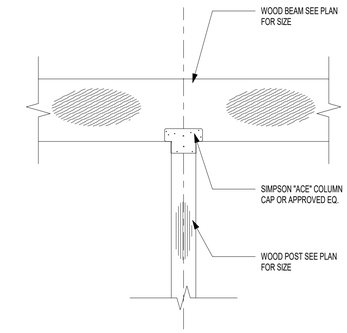

2 / SD2 INTERIOR POST W/ COL. CAP CONN.
SCALE: 3/4" = 1'-0"

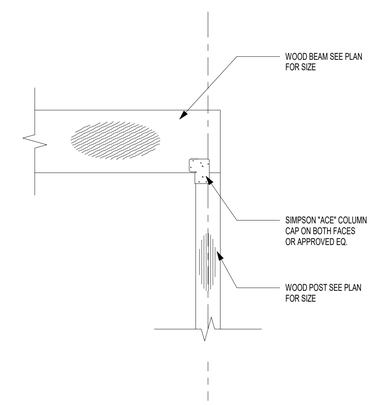

3 / SD2 END COL. TO BEAM BEARING CONNECTION
SCALE: 3/4" = 1'-0"

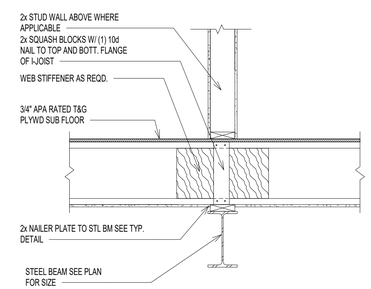

4 / SD2 TYP. JOIST BEARING ON STEEL BEAM
SCALE: 3/4" = 1'-0"

© COPYRIGHT 2016
Structural Engineering content of this drawings are property of structBIM LLC and are issued for this project only. Any re-use or re-production of these drawings shall not be done without written consent of structBIM LLC. These drawings are to be read in conjuction with project specifications and drawings from other consultants. These drawings shall not be used as shop drawings. Do not scale drawings, use dimensions as specified.

GTM ARCHITECTS
7735 OLD GEORGETOWN ROAD
SUITE 700
BETHESDA, MD 20814
(240)333-2000
(240)333-2001 FAX
WWW.GTMARCHITECTS.COM

Seal

Consultant

structBIM ENGINEERS
WE DESIGN....WE BIM
46400 BENEDICT DR, SUITE #211
PHONE: 703-657-4481
E-MAIL: info@structBIM.com

Project

21 HIGH STREET, LOT 3
BROOKVILLE, MD 20833

I certify that these documents were prepared or approved by me, and that I am a duly licensed Professional Engineer under the laws of the State of Maryland, license number 40082, Expiration Date: 02-13-2023.

Issue Description	Date

structBIM Project No.	21-0245
Checked By	KK
Drawn By	KK
Scale	3/4" = 1'-0"

Sheet Title
FRAMING DETAILS

Sheet No.
SD2

COPYRIGHT, 2016 structBIMEngineers, LLC.
PLOTTED ON: 4/19/2022 12:56:07 PM

Point Load Connector Spacing
8- Screw Connection

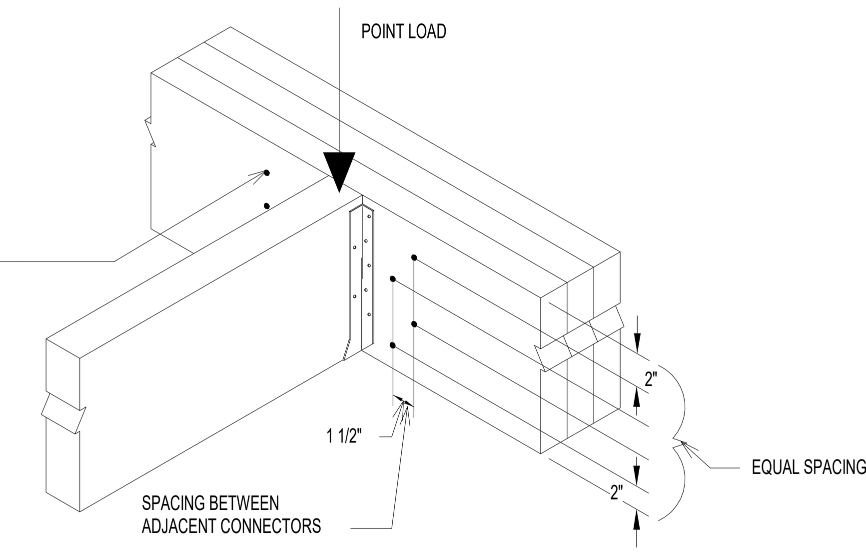

2 / SD3 LVL BEAM CONNECTION AT POINT LOAD
SCALE: 3/4" = 1'-0"

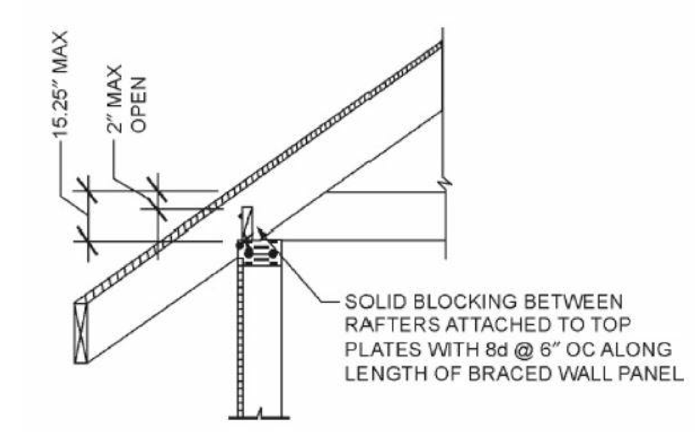

3 / SD3 TYPICAL ROOF BEARING @ BRACED WALL PANEL
SCALE: 3/4" = 1'-0"

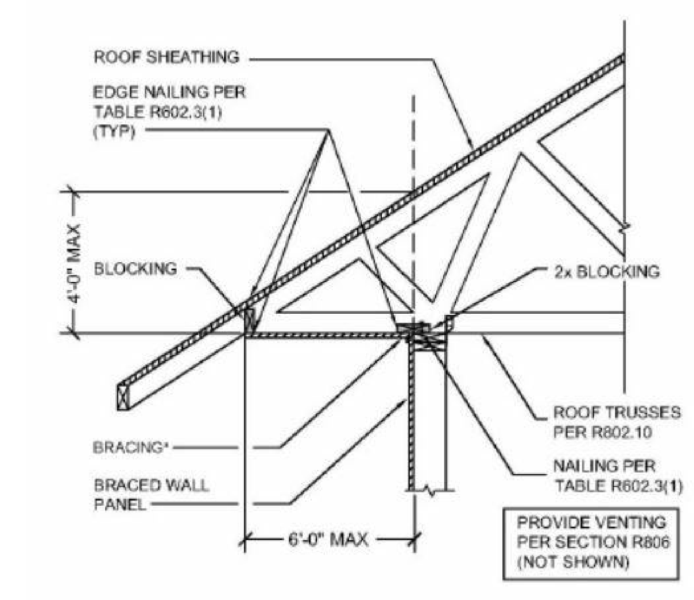

4 / SD3 TYPICAL ROOF BEARING @ BRACED WALL PANEL
SCALE: 3/4" = 1'-0"

ALLOWABLE HOLES

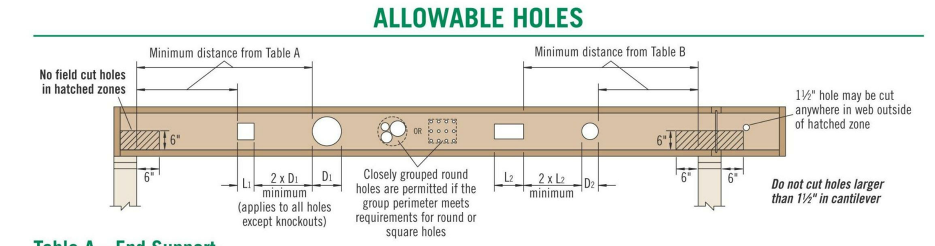

Table A—End Support
Minimum distance from edge of hole to inside face of nearest end support

Depth	TJI®	Round Hole Size 2"	3"	4"	5"	6½"	7"	8⅞"	11"	13"	Square or Rectangular Hole Size 2"	3"	4"	5"	6½"	7"	8⅞"	11"	13"
9½"	110	1'-0"	1'-6"	2'-0"	2'-6"	5'-0"					1'-0"	1'-6"	2'-6"	3'-6"	4'-6"				
	210	1'-0"	1'-6"	2'-0"	3'-0"	5'-0"					1'-0"	2'-0"	2'-6"	4'-0"	5'-0"				
	230	1'-0"	2'-0"	2'-6"	3'-6"	5'-6"					1'-0"	2'-0"	3'-0"	4'-6"	5'-0"				
11⅞"	110	1'-0"	1'-0"	1'-0"	1'-0"	2'-6"	2'-6"	5'-0"			1'-0"	1'-0"	1'-6"	2'-6"	4'-6"	4'-6"	6'-0"		
	210	1'-0"	1'-0"	1'-0"	1'-6"	2'-6"	3'-0"	5'-6"			1'-0"	1'-0"	2'-0"	3'-0"	5'-0"	5'-6"	6'-6"		
	230	1'-0"	1'-0"	1'-0"	2'-0"	3'-0"	3'-6"	6'-0"			1'-0"	1'-0"	2'-0"	3'-0"	5'-6"	5'-6"	7'-0"		
	360	1'-0"	1'-0"	1'-6"	2'-6"	4'-6"	5'-0"	7'-0"			1'-0"	1'-0"	2'-6"	4'-0"	6'-6"	6'-6"	7'-6"		
	560	1'-0"	1'-0"	1'-6"	3'-0"	5'-0"	5'-6"	8'-0"			1'-0"	2'-0"	3'-6"	5'-0"	7'-0"	7'-6"	8'-0"		
14"	110	1'-0"	1'-0"	1'-0"	1'-0"	1'-0"	1'-0"	2'-6"	5'-0"		1'-0"	1'-0"	1'-0"	1'-6"	3'-6"	4'-0"	6'-0"	8'-0"	
	210	1'-0"	1'-0"	1'-0"	1'-0"	1'-0"	1'-6"	3'-0"	6'-0"		1'-0"	1'-0"	1'-0"	2'-0"	4'-0"	4'-6"	6'-6"	8'-6"	
	230	1'-0"	1'-0"	1'-0"	1'-0"	1'-6"	2'-0"	3'-6"	6'-6"		1'-0"	1'-0"	1'-0"	2'-0"	4'-0"	5'-0"	7'-0"	9'-0"	
	360	1'-0"	1'-0"	1'-0"	1'-0"	2'-6"	3'-0"	5'-6"	8'-0"		1'-0"	1'-0"	1'-0"	2'-6"	5'-6"	6'-6"	8'-0"	9'-6"	
	560	1'-0"	1'-0"	1'-0"	1'-0"	2'-6"	3'-0"	6'-0"	9'-0"		1'-0"	1'-0"	1'-6"	3'-6"	6'-6"	7'-0"	9'-0"	10'-0"	
16"	210	1'-0"	1'-0"	1'-0"	1'-0"	1'-0"	1'-0"	1'-6"	3'-6"	6'-0"	1'-0"	1'-0"	1'-0"	1'-0"	2'-6"	3'-6"	6'-6"	8'-0"	10'-6"
	230	1'-0"	1'-0"	1'-0"	1'-0"	1'-0"	1'-0"	2'-0"	4'-0"	6'-6"	1'-0"	1'-0"	1'-0"	1'-0"	3'-0"	3'-6"	7'-0"	9'-0"	11'-0"
	360	1'-0"	1'-0"	1'-0"	1'-0"	1'-0"	1'-0"	3'-0"	6'-0"	9'-0"	1'-0"	1'-0"	1'-0"	1'-0"	4'-0"	5'-0"	9'-0"	10'-0"	11'-6"
	560	1'-0"	1'-0"	1'-0"	1'-0"	1'-0"	1'-0"	3'-0"	6'-6"	10'-0"	1'-0"	1'-0"	1'-0"	1'-6"	5'-0"	6'-0"	10'-0"	11'-0"	12'-0"

Table B—Intermediate or Cantilever Support
Minimum distance from edge of hole to inside face of nearest intermediate or cantilever support

Depth	TJI®	Round Hole Size 2"	3"	4"	5"	6½"	7"	8⅞"	11"	13"	Square or Rectangular Hole Size 2"	3"	4"	5"	6½"	7"	8⅞"	11"	13"
9½"	110	1'-6"	2'-6"	3'-0"	4'-0"	7'-6"					1'-6"	2'-6"	3'-6"	5'-6"	6'-6"				
	210	2'-0"	2'-6"	3'-6"	4'-6"	7'-6"					2'-0"	3'-0"	4'-0"	6'-0"	7'-0"				
	230	2'-6"	3'-0"	4'-0"	5'-0"	8'-0"					2'-6"	3'-0"	4'-6"	6'-6"	7'-6"				
11⅞"	110	1'-0"	1'-0"	1'-6"	2'-6"	4'-0"	4'-0"	8'-0"			1'-0"	1'-6"	2'-6"	4'-0"	6'-6"	7'-0"	9'-0"		
	210	1'-0"	1'-0"	2'-0"	3'-0"	4'-6"	5'-0"	9'-0"			1'-0"	2'-0"	3'-0"	4'-6"	7'-6"	8'-0"	10'-0"		
	230	1'-0"	2'-0"	2'-6"	3'-6"	5'-0"	5'-6"	9'-6"			1'-0"	2'-6"	3'-6"	5'-0"	8'-0"	8'-6"	10'-0"		
	360	2'-0"	3'-0"	4'-0"	5'-6"	7'-0"	7'-6"	11'-0"			2'-0"	3'-6"	5'-0"	7'-0"	9'-6"	9'-6"	11'-0"		
	560	1'-6"	3'-0"	4'-6"	5'-6"	8'-0"	8'-6"	12'-0"			3'-0"	4'-6"	6'-0"	8'-0"	10'-6"	11'-0"	12'-0"		
14"	110	1'-0"	1'-0"	1'-0"	1'-0"	2'-0"	2'-6"	4'-6"	8'-0"		1'-0"	1'-0"	1'-0"	2'-6"	5'-0"	6'-0"	9'-0"	12'-0"	
	210	1'-0"	1'-0"	1'-0"	1'-0"	2'-6"	3'-0"	5'-0"	9'-0"		1'-0"	1'-0"	2'-0"	3'-6"	6'-0"	7'-0"	10'-0"	12'-6"	
	230	1'-0"	1'-0"	1'-0"	2'-0"	3'-0"	3'-6"	5'-6"	10'-0"		1'-0"	1'-0"	2'-6"	4'-0"	6'-0"	7'-6"	10'-6"	13'-0"	
	360	1'-0"	1'-0"	2'-0"	3'-6"	5'-6"	6'-0"	8'-6"	12'-6"		1'-0"	2'-0"	4'-0"	5'-6"	9'-0"	10'-0"	12'-0"	14'-0"	
	560	1'-0"	1'-0"	1'-6"	3'-6"	5'-6"	6'-6"	9'-6"	13'-6"		1'-0"	3'-0"	5'-0"	7'-0"	10'-0"	11'-0"	13'-6"	15'-0"	
16"	210	1'-0"	1'-0"	1'-0"	1'-0"	1'-0"	1'-0"	3'-0"	5'-6"	9'-6"	1'-0"	1'-0"	1'-0"	2'-0"	4'-6"	5'-6"	9'-6"	12'-6"	15'-6"
	230	1'-0"	1'-0"	1'-0"	1'-0"	1'-6"	2'-0"	4'-0"	6'-6"	10'-6"	1'-0"	1'-0"	1'-0"	2'-6"	5'-0"	6'-0"	10'-6"	13'-0"	16'-0"
	360	1'-0"	1'-0"	1'-0"	1'-0"	3'-0"	4'-0"	6'-6"	10'-0"	13'-6"	1'-0"	1'-0"	2'-0"	4'-0"	7'-6"	8'-6"	13'-0"	14'-6"	17'-0"
	560	1'-0"	1'-0"	1'-0"	1'-0"	2'-6"	3'-6"	7'-0"	11'-0"	15'-0"	1'-0"	1'-0"	3'-6"	5'-6"	9'-0"	10'-0"	14'-6"	16'-0"	18'-0"

▪ Rectangular holes based on measurement of longest side.

How to Use These Tables

1. Using **Table A, Table B,** or both if required, determine the hole shape/size and select the TJI® joist and depth.
2. Scan horizontally until you intersect the correct hole size column.
3. Measurement shown is minimum distance from edge of hole to support.
4. Maintain the required minimum distance from the end **and** the intermediate or cantilever support.

General Notes

- Holes may be located vertically anywhere within the web. Leave ⅛" of web (minimum) at top and bottom of hole.
- Knockouts are located in web at approximately 12" on-center; they do not affect hole placement.
- For simple span (5' minimum) uniformly loaded joists meeting the requirements of this guide, one maximum size round hole may be located at the center of the joist span **provided that no other holes occur in the joist.**
- Distances are based on the maximum uniform loads shown in this guide. For other load conditions or hole configurations, use Forte™ software or contact your iLevel representative.

DO NOT cut or notch flange.

DO NOT cut holes in cantilever reinforcement.

1 / SD3 TYPICAL ALLOWABLE HOLE SIZES FOR I JOISTS
SCALE: 3/4" = 1'-0"

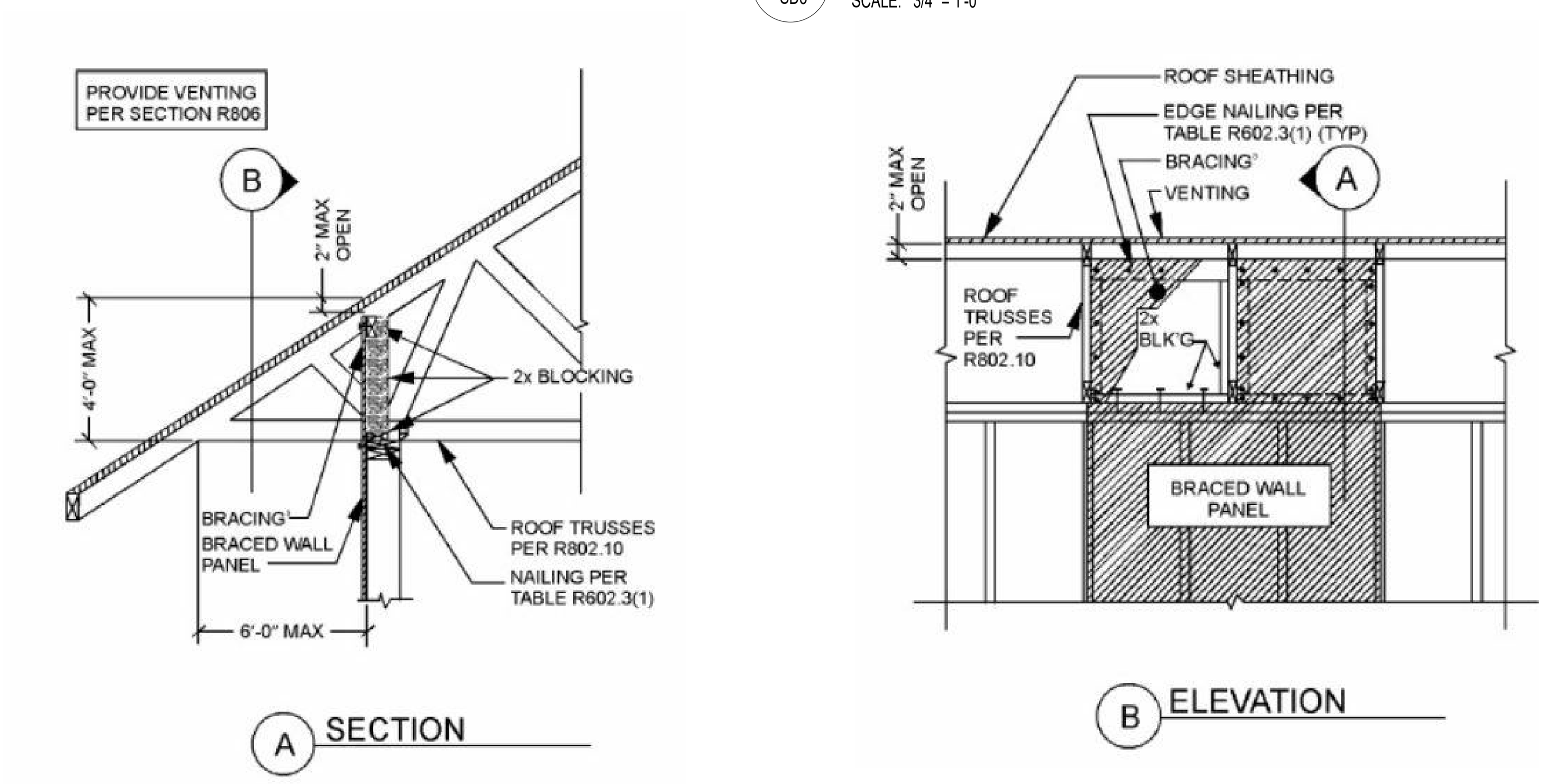

5 / SD3 TYPICAL ROOF BEARING @ BRACED WALL PANEL
SCALE: 3/4" = 1'-0"

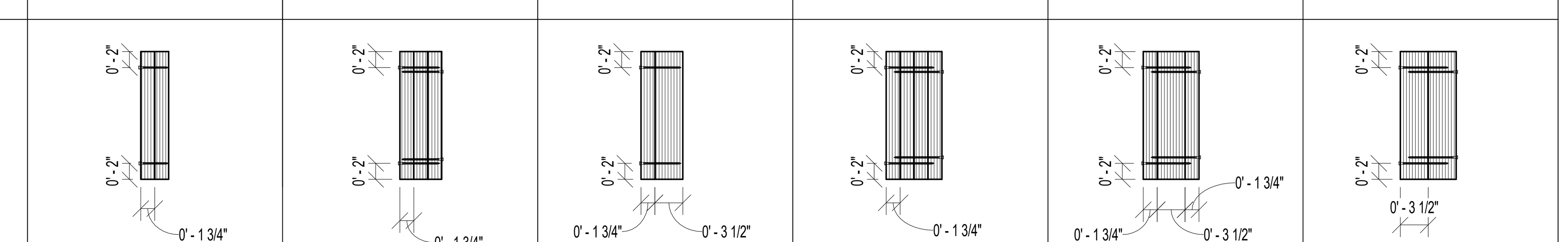

ASSEMBLY	A	B	C	D	E	F
SKETCH						
FASTNER	SIMPSON - SDW22 x 3 5/8"	SIMPSON - SDW22 x 5"	SIMPSON - SDW22 x 5"	SIMPSON - SDW22 x 6 3/4"	SIMPSON - SDW22 x 6 3/4"	SIMPSON - SDW22 x 6 3/4"
SPACING	12" O.C.	12" O.C.	12" O.C.	12" O.C.	12" O.C.	12" O.C.
NOTE		INSTALL FASTNERS FROM BOTH SIDES STAGGER BY 3" FASTENERS FROM OPPOSITE SIDES		INSTALL FASTNERS FROM BOTH SIDES STAGGER BY 3" FASTENERS FROM OPPOSITE SIDES	INSTALL FASTNERS FROM BOTH SIDES STAGGER BY 3" FASTENERS FROM OPPOSITE SIDES	INSTALL FASTNERS FROM BOTH SIDES STAGGER BY 3" FASTENERS FROM OPPOSITE SIDES

NOTES:

1. CONTACT ENGINEER FOR ALTERNATE FASTENERS IF NEEDED.
2. NOTIFY ENGINEER IF POINT LOAD IS APPLIED ON LVL BEAMS. INSTALL MIN. 8 FASTENERS ON EITHER SIDE OF POINT LOAD WITH 2" SPACING.
3. MAINTAIN MINIMUM EDGE DISTANCE OF 6" FROM ENDS.

2A / SD3 TYP. LVL PLY CONNECTION DETAIL
SCALE: 3/4" = 1'-0"

REVIEWED
By Michael Kyne at 2:13 pm, May 23, 2022

APPROVED
Montgomery County
Historic Preservation Commission

© COPYRIGHT 2016
Structural Engineering content of this drawings are property of structBIM LLC and are issued for this project only. Any re-use or re-production of these drawings shall not be done without written consent of structBIM LLC. These drawings are to be read in conjuction with project specifications and drawings from other consultants. These drawings shall not be used as shop drawings. Do not scale drawings, use dimensions as specified.

G T M A R C H I T E C T S

7735 OLD GEORGETOWN ROAD
SUITE 700
BETHESDA, MD 20814
(240)333-2000
(240)333-2001 FAX
WWW.GTMARCHITECTS.COM
GTM

Seal

Consultant

structBIM ENGINEERS
WE DESIGN....WE BIM
46400 BENEDICT DR, SUITE #211
PHONE: 703-657-4481
E-MAIL: info@structBIM.com

Project

21 HIGH STREET, LOT 3
BROOKVILLE, MD 20833

I certify that these documents were prepared or approved by me, and that I am a duly licensed Professional Engineer under the laws of the State of Maryland, license number 40082, Expiration Date: 02-13-2023.

N

Issue Description	*Date*

structBIM Project No.	21-0245
Checked By	KK
Drawn By	KK
Scale	3/4" = 1'-0"

Sheet Title
FRAMING DETAILS

Sheet No.
SD3

COPYRIGHT, 2016 structBIMEngineers, LLC.
PLOTTED ON: 4/15/2022 12:50:09 PM

FILE NAME:

STANDARDS AND CODES:

- DESIGN BUILDING CODE: INTERNATIONAL RESIDENTIAL CODE 2018 EDITION, STATE OR LOCAL JURISDICTION AMENDMENTS AND/OR ORDINANCES.
- IN ADDITION TO THE REQUIREMENTS INCLUDED IN THESE PROJECT, ALL CONSTRUCTION AND MATERIAL SHALL FURTHER CONFORM TO THE APPLICABLE PROVISIONS FROM LATEST EDITION OF FOLLOWING STANDARDS/CODES AS REQUIRED BY GOVERNING CODE OR LOCAL JURISDICTION.
- ACI (AMERICAN CONCRETE INSTITUTE)-318: BUILDING CODE REQUIREMENTS FOR STRUCTURAL CONCRETE..
- ACI-332: CODE REQUIREMENTS FOR RESIDENTIAL CONCRETE CONSTRUCTION
- ACI-530: BUILDING CODE REQUIREMENTS FOR MASONRY STRUCTURES
- AISC (AMERICAN INSTITUTE OF STEEL CONSTRUCTION): STEEL CONSTRUCTION MANUAL.
- NDS: NATIONAL DESIGN SPECIFICATIONS (NOS) FOR WOOD CONSTRUCTOIN WITH SUPPLEMENT.
- WFCM: WOOD FRAME CONSTRUCTION MANUAL FOR ONE- AND TWO- FAMILY DWELLINGS.
- AFPA: AMERICAN FOREST AND PAPER ASSOCIATOIN - SPAN TABLE FOR JOISTS AND RAFTERS.
- AISI S100: NORTH AMERICAN SPECIFICATION FOR THE DESIGN OF COLD FORMED STEEL STRUCTURAL MEMBERS.
- AISI S230: STANDARD FOR COLD-FORMED STEEL FRAMING-PRESCRIPTIVE METHOD FOR ONE- AND TWO-FAMILY DWELLINGS.
- AMERICAN INSTITUTE OF TIMBER CONSTRUCTION (AITC).
- AMERICAN NATIONAL STANDARDS INSTITUTE (ANSI).
- APA (AMERICAN PLYWOOD ASSOCIATION) E30: ENGINEERED WOOD CONSTRUCTION GUIDE
- ASCE - 5 (AMERICAN SOCIETY OF CIVIL ENGINEERS): BUILDING CODE REQUIREMENTS FOR MASONRY STRUCTURES.
- ASCE-6: SPECIFICATIONS FOR MASONRY STRUCTURES.
- ASCE-7: MINIMUM DESIGN LOADS FOR BUILDING AND OTHER STRUCTURES.
- AMERICAN WOOD COUNCIL (AWC).
- AMERICAN SOCIETY FOR TESTING AND MATERIALS (ASTM).
- AMERICAN WOOD PROTECTION ASSOCIATION (AWPA).
- AMERICAN WELDING SOCIETY (AWS).
- FEDERAL EMERGENCY MANAGEMENT AGENCY (FEMA).
- GYPSUM ASSOCIATION (GA).
- NATIONAL CONCRETE MASONRY ASSOCIATION (NCMA).
- SSPC: STEEL STRUCTURES PAINTING COUNCIL.
- TPI-I: NATOINAL DESIGN STANDARDS FOR METAL-PLATE-CONNECTED WOOD TRUSS CONSTRUCTION.

DESIGN LOADS:

DESCRIPTION	DEAD LOAD	LIVE LOAD	SNOW LOAD (b)
ROOF	17 PSF	-	30 PSF
FLOOR	15 PSF	40 PSF	-
ATTIC W/OUT STORAGE	10 PSF	10 PSF	-
ATTIC W/ LIMITED STORAGE	10 PSF	20 PSF	-
HABITABLE ATTICS & ATTICS W/ FIXED STAIR	10 PSF	30 PSF	-
SLEEPING ROOMS	10 PSF	30 PSF	-
BALCONIES & DECKS	10 PSF	40 PSF	-
STAIRS	10 PSF	40 PSF	-
GUARD RAILS & HAND RAILS	-	200 LBS (c)	-

WIND LOAD:

- WIND SPEED (ULTIMATE): 115 MPH
- WIND PRESSURE: 18 PSF (f)
- WIND EXPOSURE CATEGORY: B

FOUNDATION DESIGN LOADS:

- SOIL BEARING CAPACITY (g): 2000 PSF
- LATERAL EARTH PRESSURE: 60 PSF/FT

EARTHQUAKE LOADS:

- SEISMIC DESIGN CATEGORY: B
- SITE CLASS: B

NOTES:

a. REFER TO IRC TABLE R301.5 FOR MORE INFORMATION.
b. SNOW LOAD SPECIFIED IS GROUND SNOW LOAD ONLY.
c. A SINGLE CONCENTRATED LOAD APPLIED IN ANY DIRECTION AT ANY POINT ALONG THE TOP.
d. MECHANICAL EQUIPMENT LOADS IN EXCESS OF 200 LBS SHALL BE NOTIFIED TO STRUCTURAL ENGINEER.
e. PRE-FABRICATED STRUCTURAL COMPONENT SHALL COMPLY WITH DESIGN LOADS FROM APPLICABLE CODES/STANDARDS IN ADDITION TO LOADS SPECIFIED IN THESE NOTES.
f. WIND PRESSURE SPECIFIED IS FOR MAIN WIND FORCE RESISTING SYSTEM ONLY. WIND PRESSURE & LOADS FOR STRUCTURAL COMPONENTS AND CLADDING SHALL BE DETERMINED BY RESPECTIVE REGISTERED DESIGN PROFESSIONAL PER APPLICABLE STANDARDS/CODES.
g. SOIL BEARING CAPACITY IS ASSUMED UNLESS GEOTECHNICAL REPORT IS PROVIDED PER SITE WORK SECTION.

DEFLECTION CRITERIA:

DESCRIPTION	TOTAL LOAD	LIVE LOAD
ROOF TRUSSES/RAFTERS/CEILING JOISTS	L/240	L/360 OR 1/2" MAX.
FLOOR JOISTS/FLOOR TRUSSES	L/240	L/480 OR 1/2" MAX.
MEMBERS SUPPORTING BRICK/ HORIZONTAL MASONRY MEMBERS	L/600 OR 0.3" MAX.	
JOISTS/TRUSSES SUPPORTING CERAMIC TILE	L/720	

SITE WORK:

- GEOTECHNICAL REPORT WAS NOT PROVIDED AND FOUNDATION DESIGN IS BASED ON ASSUMED SOIL DESIGN CRITERIA AND SHALL BE FIELD VERIFIED.
- BOTTOM OF ALL EXTERIOR FOOTING SHALL BE MINIMUM FROST DEPTH OF 30 INCHES BELOW GRADE OR AS REQUIRED BY GOVERNING AUTHORITY OR CODE, AND SHALL PROJECT 12" IN TO UNDISTURBED VIRGIN SOIL OR ENGINEERED FILL.
- SOIL BEARING CAPACITY SHALL BE VERIFIED ON-SITE BY GEOTECHNICAL ENGINEER.
- ALL BEARING STRATA SHALL BE ADEQUATELY DRAINED PRIOR TO PLACING FOUNDATION CONCRETE.
- THE SIDES OF FOOTINGS MAY BE EARTH-FORMED IF THE EXCAVATION CAN BE KEPT VERTICAL CLEAN AND STABLE. OTHERWISE FORMS MUST BE USED.
- UNBRACED EXCAVATIONS SHALL BE SLOPED NO GRATER THAN 2:1.
- NO EXCAVATION SHALL BE CLOSER THAN ATLEAST A SLOPE OF 2:1 TO THE UNDERSIDE OF ANY EXISTING OR NEW FOOTING WITHOUT THE WRITTEN AND CERTIFIED PERMISSION FROM GEOTECHNICAL ENGINEER.
- STEP FOOTINGS SHALL BE PROVIDED WITH A RATIO OF 2:1.
- FOUNDATION ELEMENTS THAT ARE TO SUPPORT FILL ON BOTH SIDES SHALL BE BACKFILLED SIMULTANEOUSLY AND UNIFORMLY ON BOTH SIDES.
- FOUNDATION ELEMENTS THAT ARE TO SUPPORT FILL ON ONE SIDE ONLY SHALL BE PROPERLY BRACED BY PERMANENT STRUCTURAL ELEMENTS PRIOR TO BACKFILLING. PROVIDE TEMPORARY BRACING AS REQUIRED UNTIL PERMANENT BRACING IN PLACE AND FOUNDATION WALL ACHIEVES DESIRED STRENGTH.
- ENGINEERED FILLS HALL BE PLACED IN 8" MAXIMUM HEIGHT LOOSE LIFTS AND COMPACTED TO 95% OF MAXIMUM DRY DENSITY AT OPTIMUM MOISTURE CONTENT AS ESTABLISHED BY ASTM D-698.
- NO PORTION OF THE STRUCTURAL DRAWINGS SHALL BE USED AS SHOP DRAWINGS. CONTRACTOR IS RESPONSIBLE FOR FURNISHING SHOP DRAWINGS AND SHALL SUBMIT TO ENGINEER OF RECORD FOR REVIEW.
- PROVIDE SHORING AND PROTECTION FOR EXCAVATION BANKS AS NECESSARY TO AVOID CAVING
- PROVIDE 6 MIL POLYETHYLENE VAPOR VARIOUS UNDER SLAB ON GRADE OR AS RECOMMENDED BY GEOTECHNICAL ENGINEER.
- ALL RECOMMENDATIONS SPECIFIED IN GEOTECHNICAL REPORT SHALL BE FOLLOWED ALL THE TIME AND SHALL GOVERN.

GENERAL

- STRUCTURAL ENGINEERING DRAWINGS PREPARED IN THIS SET ARE BASED ON ARCHITECTURAL DRAWINGS AND PROVIDED INFORMATION AND SHALL BE READ IN CONJUNCTION WITH ARCHITECTURAL DRAWINGS.
- DETAILS, SECTIONS AND NOTES SHOWN ON THESE DRAWINGS ARE INTENDED TO BE TYPICAL AND SHALL BE APPLY TO SIMILAR CONDITIONS ELSEWHERE OTHERWISE SHOWN OR NOTED.
- THE STRUCTURAL INTEGRITY OF THE BUILDING IS DEPENDENT UPON COMPLETION OF WORK ACCORDING TO CONTRACT DRAWINGS AND SPECIFICATIONS. THE STRUCTURAL ENGINEER ASSUMES NO LIABILITY FOR THE STRUCTURE DURING CONSTRUCTION. THE METHODS OF CONSTRUCTION AND SEQUENCE OF OPERATIONS IS THE SOLE RESPONSIBILITY OF OWNER/CONTRACTOR.
- TEMPORARY BRACING AND SHORING SHALL BE RESPONSIBILITY OF CONTRACTOR AND SHALL BE DESIGNED BY SPECIALITY ENGINEER PER APPLICABLE CODES/STANDARDS TO ENSURE VERTICAL AND LATERAL STABILITY OF THE STRUCTURE OR PORTION THEREOF DURING THE CONSTRUCTION.
- THE CONTRACTOR SHALL BE RESPONSIBLE FOR PROVIDING NECESSARY UNDERPINNING OR BRACING FOR EXISTING STRUCTURE OR PORTION THEREOF. STRUCTURAL ENGINEER IS NOT RESPONSIBLE FOR ANY DESIGN OR PROVISIONS OF ANY TEMPORARY STRUCTURES.
- DO NOT CHANGE SIZE OR DIMENSIONS OF STRUCTURAL ELEMENTS WITHOUT WRITTEN PERMISSION FROM STRUCTURAL ENGINEER.
- DO NOT SCALE THE DRAWINGS, USE DIMENSIONS SHOWN. COORDINATE AND VERIFY ALL DIMENSIONS WITH ARCHITECTURAL DRAWINGS. ARCHITECTURAL DRAWINGS SUPERCEDES ALL DIMENSIONS SHOWN IN THESE DRAWINGS.
- GENERAL CONTRACTOR IS RESPONSIBLE TO PERFORM ALL NECESSARY TESTINGS PER GOVERNING ASTM STANDARDS FOR SOIL, CONCRETE OR ANY OTHER MATERIALS INVOLVED IN THE PROJECT AND SHOP DRAWINGS OF SUCH DESIGN OR REPORTS OF TESTING SHALL BE SUBMITTED TO ARCHITECT/ENGINEER FOR RECORD AND APPROVAL. ALL SUCH DESIGN OR TEST RESULTS SHALL BE SIGNED AND SEALED BY LICENSED PROFESSIONAL IN STATE OR JURISDICTION WHERE THE PROJECT IS LOCATED.

CAST-IN-PLACE CONCRETE:

- CONCRETE DESIGN AND DETAILING SHALL CONFORM TO THE REQUIREMENTS OF ACI 318 AND ACI 301, LATEST EDITIONS. CONTRACTOR SHALL SUBMIT MIX DESIGNS ACCOMPANIED BY APPROPRIATE GRAPHS AND BACKGROUND DATA FOR APPROVAL. MIX DESIGN SHALL INDICATE 7 AND 28 DAYS STRENGTHS, CEMENT CONTENT, AIR CONTENT, WATER-CEMENT RATIO, AMOUNT OF FINE AND COARSE AGGREGATES, AND ADMIXTURES.
- ALL REINFORCING STEEL SHALL BE DEFORMED BILLET STEEL CONFORMING TO ASTM A615 GRADE 60 AND DETAILED, FABRICATED AND PLACED CONFORMING TO MANUAL OF STANDARD PRACTICE FOR DETAILING CONCRETE STRUCTURES (ACI 315)
- ALL WELDED WIRE FABRIC SHALL CONFORM TO ASTM A185. ALL MESH EDGES SHALL LAP A MIN. OF 2 SQUARES.
- CONCRETE COMPRESSIVE STRENGTHS AT 28 DAYS SHALL BE 3000 psi FOR FOOTINGS, FOUNDATION WALLS AND SLAB ON GRADE IN ENCLOSED SPACES & 3500 psi FOR HORIZONTAL SURFACES EXPOSED TO WEATHER.
- SLUMP AT THE POINT OF DISCHARGE IN TO THE FORMS SHALL BE 4" +/- 1" FOR VERTICAL ELEMENTS AND 6" +/- 1" FOR HORIZONTAL ELEMENTS.
- CAST-IN-PLACE CONCRETE SHALL BE READY-MIX PER ASTM C94.
- ALL CONCRETE EXPOSED TO WEATHER SHALL HAVE A MIN. AIR ENTRAINMENT OF 6% +/- 1% PER ACI 318-08; SECTION: 4.4.1.
- PROVIDE CORNER BARS AT ALL WALL AND FOOTING INTERSECTIONS AND MATCH CONTINUING REINFORCEMENT.
- SEE ARCHITECTURAL DRAWINGS FOR NECESSARY CONCRETE FINISHES.
- RESTRICT ADDITION OF MIX WATER AT THE JOB SITE. DO NOT ADD WATER WITHOUT APPROVAL OF THE INSPECTIONS ENGINEER AND DO NOT EXCEED SLUMP LIMITATIONS.
- ALL GROUTS SHALL BE PRE-MIXED NON-SHRINKABLE, NON-METALLIC FORMULA PRO CONFORMING TO ASTMC827, AND SHALL HAVE A SPECIFIED COMPRESSIVE STRENGTH OF 3000 psi WITHIN 24 HOURS AND 6000 psi AT 28 DAYS. PRE-GROUTING OF BASE PLATES WILL NOT BE PERMITTED.
- PROVIDE KEYED JOINTS BETWEEN ALL NON-MONOLITHIC INTERSECTING CONCRETE ELEMENTS AND JOINTS.
- CONTRACTOR SHALL VERIFY EMBEDDED ITEMS, INCLUDING BUT NOT LIMITED TO ANCHOR BOLTS, BOLT CLUSTERS, WELD PLATES etc. BEFORE PLACING CONCRETE. NOTIFY ENGINEER OF ANY CONFLICTS WITH REBAR.
- CONCRETE EXPOSED TO WEATHER SHALL BE AIR ENTRAINED. TOTAL AIR CONTENT (BY PERCENT OF CONCRETE VOLUME) SHALL BE NOT LESS THAN 5% OR MORE THAN 7%.
- GENERAL CONTRACTOR IS RESPONSIBLE FOR SUBMITTING SHOP DRAWINGS SIGNED AND SEALED BY REGISTERED DESIGN PROFESSIONAL THAT INCLUDES: 1. CONCRETE MIX DESIGN 2. DETAILED REINFORCEMENT SHOP DRAWINGS PER ACI 318 AND ACI DETAILING MANUAL. 3. FORM WORK, SHORING, RE-SHORING OR UNDERPINNING SHOP DRAWINGS AS REQUIRED FOR PROJECT.

REINFORCING STEEL:

- REINFORCING BARS SHALL BE DEFORMED BILLET STEEL CONFORMING TO ASTM A615. REINFORCING BARS SHALL BE GRADE 60, UNLESS NOTED OTHERWISE.
- PLAIN BARS FOR SPIRAL REINFORCEMENT SHALL CONFORM TO ASTM A 615, GRADE 60.
- PLAIN STEEL WELDED WIRE REINFORCEMENT SHALL CONFORM TO ASTM A185.
- WELDED DEFORMED STEEL BAR MATS FOR CONCRETE REINFORCEMENT SHALL CONFORM TO ASTM A184.
- BARS SHALL BE BRANDED BY THE MANUFACTURER WITH BAR SIZE AND GRADE OF STEEL AND CERTIFIED MILL REPORTS SHALL BE SUBMITTED FOR RECORD.
- REINFORCING STEEL SHALL BE DETAILED IN ACCORDANCE WITH THE ACI "MANUAL OF STANDARD PRACTICE FOR DETAILING REINFORCED CONCRETE STRUCTURES", LATEST EDITION.
- PROVIDE MINIMUM CLEAR CONCRETE COVER (a) FOR REINFORCEMENT AS SPECIFIED BELOW UNLESS SPECIFICALLY NOTED OTHERWISE ON THE PLANS:

DESCRIPTION			MIN. COVER (IN.)
CONCRETE CAST AGAINST AND PERMENANTLY EXPOSED TO EARTH			3"
CONCRETE EXPOSED TO EARTH OR WEATHER	#6 THROUGH #18 BARS		2"
	#5 BAR, W31 OR D31 WIRE AND SMALLER		1 1/2"
CONCRETE NOT EXPOSED TO EARTH OR WEATHER	SLAB, WALLS, JOISTS		3/4"
	BEAMS, COLUMNS (PRIMARY REINF., TIES, STIRRUPS, SPIRALS.		1 1/2"
	SHELLS, FOLDED PLATES	#6 BARS AND LARGER	3/4"
		#5 BAR, W31 OR D31 WIRE, AND SMALLER	1/2"

MASONRY:

- CONCRETE BLOCKS USED IN WALLS SHALL CONFORM TO ASTM C90. BRICK SHALL CONFORM TO ASTM C62 AND ASTM C216, AS APPLICABLE. MORTAR FOR BRICK VENEER AND OTHER MASONRY SHALL CONFORM TO ASTM C270, TYPE N. TYPE S MORTAR SHALL BE USED TYPICALL FOR ALL MASONRY, AND TYPE M MORTAR SHALL BE USED FOR BELOW GRADE MASONRY AND/OR MASONRY IN CONTACT WITH SOIL, U.N.O.
- HOLLOW LOAD BEARING UNITS SHALL CONFORM TO ASTM C90, NORMAL WEIGHT TYPE II WITH A MIN. NET COMPRESSIVE UNIT STRENGTH OF 1900 psi. (NET AREA COMPRESSIVE MASONRY STRENGTH fm' = 1500 psi)
- REINFORCED MASONRY WALLS SHALL BE BUILT SUCH THAT CELLS LINE UP VERTICALLY.
- FILLED CELLS SHALL BE FILLED WITH COARSE GROUT. COARSE GROUT SHALL CONFORM TO ASTM C476. PROPERTIES SHALL INCLUDE: 2500 psi AT 28 DAYS, 3/8" MAXIMUM AGGREGATE AND 8"-11" SLUMP. FILLED CELLS MAY ALTERNATIVELY BE FILLED WITH A 3000 psi PEA GRAVEL MIX CONCRETE. TEH PEA GRAVEL MIX SHALL BE PROPORTIONED WITH A MAXIMUM AGGREGATE SIZE OF 3/8" DIAMETER TO PROVIDE A MIN. OF 1/2" CLEARANCE, ADDITIONALLY, THE PEA GRAVEL MIX SHALL PROVIDE AN 8" TO 11" SLUMP.
- A CONTINUOUS REINFORCED CMU/CONCRETE BOND BEAM SHALL BE PROVIDED ON TOP OF EACH WALL. BOND BEAMS SHALL BE MIN. 8"x8" WITH CONTINUOUS (2) #4 REBARS.
- WHERE EXPANSION OR ANY OTHER ANCHORS ARE SHOWN, MASONRY CELLS SHALL BE FULLY GROUTED AT MINIMUM OF 8" ABOVE AND BELOW EACH EXPANSION ANCHOR OR ANY OTHER ANCHORS UNLESS NOTED OTHERWISE.
- UNLESS NOTED OTHERWISE ON PLANS, PROVIDE A MIN. OF (2) FULLY GROUTED COURSES BY 32" LENGTH AT ALL STRUCTURAL STEEL BEARING.
- VERTICAL REINFORCING BARS SHALL BE HELD IN POSITION WITH BAR POSITIONERS @ 8'-0" O.C., AT TOP AND BOTTOM OF BAR WITH MIN. CLEARANCE OF 1/2" FROM MASONRY. THE CLEAR DISTANCE BETWEEN BARS SHALL NOT BE LESS THAN ONE BAR DIAMETER NOR LESS THAN 1". CENTER BARS IN WALLS UNLESS NOTED OTHERWISE.
- REINFORCING BARS SHALL BE STRAIGHT EXCEPT FOR BENDS AROUND CORNERS.
- MIN. LAP SPLICE SHALL BE 36 BAR DIAMETERS. WIRE TIE LAP SPLICES.
- WHEN A FOUNDATION DOWEL DOESN'T LINE UP WITH A VERTICAL CORE. IT SHALL NOT BE SLOPED MORE THAN 1:6. DOWELS SHALL BE GROUTED IN TO A CORE IN VERTICAL ALIGNMENT, EVEN IF IT IS IN A CELL ADJACENT TO VERTICAL WALL REINFORCEMENT.
- HORIZONTAL WALL REINFORCING SHALL BE ZINC COATED COLD DRAWN TRUSS TYPE DUR-O-WALL (OR EQUIVALENT) CONFORMING TO ASTM A82 SPACED AT 16' O.C. MAX. HORIZONTAL JOINT REINFORCING SHALL CONSIST OF (2) 9 GA OR LARGER HORIZONTAL BARS WELD CONNECTED WITH 12 GA OR LARGER CROSS-WIRES. ZINC COATING CONFORM TO ASTM A116-73. LAP SPLICE JOINT REINFORCEMENT 12-INCHES MIN.
- PROVIDE HORIZONTAL JOINT REINFORCEMENT AT MASONRY OPENINGS SUCH AS DOORS AND WINDOWS. CONTINUE JOINT REINFORCING FOR THE FIRST AND SECOND BLOCK COURSE ABOVE AND BELOW MASONRY OPENING. EXTEND JOINT REINFORCING A MIN. OF TWO FEET BEYOND OPENINGS.
- CLEANOUTS SHALL BE PROVIDED IN THE BOTTOM COURSE OF MASONRY IN EACH GROUT POUR WHEN THE POUR HEIGHT EXCEEDS 5'. CLEANOUTS SHALL BE SAW-CUT 4" x 4".
- GROUT POUR HEIGHT SHALL NOT EXCEED 24'. PLACE GROUT IN 5' MAX. LIFTS HEIGHTS.
- CONSOLIDATE GROUT POURS AT THE TIME OF PLACEMENT BY MECHANICAL MEANS AND RECONSOLIDATE AFTER INITIAL WATER LOSS AND SETTLEMENT.
- STORE BLOCKS ON PALLETS AND COVER WITH VISQUEEN.
- PLACE ALL MASONRY IN RUNNING BOND WITH 3/8" MORTAR JOINTS. PROVIDE COMPLETE COVERAGE FACE SHELL MORTAR BEDDING HORIZONTAL AND VERTICALL FULLY MORTAR WEBS IN ALL COURSES OF PIERS, COLUMNS, AND PILASTERS AND ADJACENT TO GROUT CELLS.
- MASONRY CONTROL JOINTS SHALL BE INSTALLED AT LOCATIONS INDICATED ON DRAWINGS. ADDITIONALLY INSTALL MASONRY CONTROL JOINTS SPACE AT 26'-0" O.C.

STRUCTURAL STEEL:

- STRUCTURAL STEEL SHALL CONFORM TO THE LATEST EDITION OF THE AISC "SPECIFICATION FOR THE DESIGN, FABRICATION AND ERECTION OF STRUCTURAL STEEL FOR BUILDINGS".
- ALL W SHAPE STEEL SHALL CONFORM TO ASTM 992 (Fy = 50 KSI).
- ALL HOLLOW STRUCTURAL SECTIONS (HSS) SHALL CONFORM TO ASTM A500, GRADE B.
- ALL OTHER STRUCTURAL STEEL SHALL CONFORM TO ASTM A36 (Fy = 36 KSI).
- ALL ANCHOR BOLTS SHALL CONFORM TO ASTM A307 U.N.O.
- ALL HIGH STRENGTH BOLTS SHALL CONFORM TO ASTM A325 U.N.O.
- BOLTED CONNECTIONS SHALL USE HIGH STRENGTH BOLTS.
- BOLTS IN MOMENT FRAMES SHALL USE HIGH STRENGTH SLIP CRITICAL BOLTS. SLIP CRITICAL CONNECTIONS SHALL HAVE CONTACT SURFACES MEETING CLASS A SURFACE CONDITIONS.
- WELDED CONNECTIONS SHALL CONFORM TO THE LATEST EDITION OF AMERICAN WELDING SOCIETY CODE, AWS D11.
- ALL WELDED CONNECTIONS SHALL USE E70XX, LOW HIDROGEN ELECTRODES U.N.O. ELECTRODES SHALL BE PROTECTED FROM MOISTURE.
- BOLTED CONNECTIONS SHALL CONFORM TO THE REQUIREMENTS OF "SPECIFICATIONS FOR STRUCTURAL JOINTS USING ASTM A325 OR A490 BOLTS" AS APPROVED BY RESEARCH COUNCIL ON STRUCTURAL CONNECTIONS (RCSC). USE BEARING TYPE BOLTS WITH THREAD ALLOWED ACROSS THE SHEAR PLANE.
- ALL STEEL CONNECTIONS SHALL BE WELDED AROUND WITH 1/4" FILLET WELD UNLESS OTHERWISE NOTED, EXCEPT FOR SLOTTED CONNECTIONS.
- EXPANSION BOLTS SHALL BE GALVANIZED CARBON STEEL COMPONENTS, ZINC-PLATED TO COMPLY WITH ASTM B 633 AND FF-S 325, GROUP II, TYPE 4, CLASS I.
- FULL PENETRATION WELDS SHALL BE MADE AGAINST A 1/8" x 1" BACKER PLATE TACK WELDED IN PLACE BELOW THE WELD. PENETRATION WELDS SHALL BE EQUIVALENT IN DEPTH AND LENGTH TO THE PARTS JOINED.
- SUBMIT ALL STRUCTURAL STEEL/LIGHT GAGE SHOP DRAWINGS SIGNED AND SEALED BY A REGISTERED PROFESSIONAL ENGINEER. SHOP DRAWINGS SHALL INCLUDE MEMBER SIZES, MATERIAL SPECIFICATION, CONNECTIONS AND/OR ANY OTHER ITEMS REQUIRED BY GOVERNING BUILDING CODE OR JURISDICTION.
- NO FABRICATION SHALL BE STARTED PRIOR TO SHOP DRAWINGS APPROVAL.

STRUCTURAL LUMBER:

- WOOD CONSTRUCTION, INCLUDING LUMBER, CONNECTIONS, AND DETAILS SHALL COMPLY WITH THE REQUIREMENTS OF AMERICAN INSTITUTE OF TIMBER CONSTRUCTION AND THE NATIONAL FOREST AND PAPER ASSOCIATION'S CURRENT "NATIONAL DESIGN SPECIFICATION FOR WOOD CONSTRUCTION".
- ALL STRUCTURAL WOOD MEMBERS SHALL COMPLY WITH FOLLOWING MINIMUM DESIGN VALUES:

SPECIES		Fb	Ft (a)	Fv (a)	Fc ⊥ (a)	Fc ll (b)	E	Emin
HEMFIR #2		850 psi	525 psi	150 psi	405 psi	1300 psi	1300000 psi	470000 psi
SPF #2		875 psi	450 psi	135 psi	425 psi	1150 psi	1400000 psi	510000 psi
THICKNESS	WIDTH	SOUTHERN PINE #2						
2" TO 4"	2" TO 4"	1100 psi	675 psi	175 psi	565 psi	1450 psi	1400000 psi	510000 psi
	5" TO 6"	1000 psi	600 psi	175 psi	565 psi	1400 psi	1400000 psi	510000 psi
	8"	925 psi	550 psi	175 psi	565 psi	1350 psi	1400000 psi	510000 psi
	10"	800 psi	475 psi	175 psi	565 psi	1300 psi	1400000 psi	510000 psi
	12"	750 psi	450 psi	175 psi	565 psi	1250 psi	1400000 psi	510000 psi
MICROLAM LVL (ML)		2600 psi	1555 psi	285 psi	750 psi	2510 psi	1900000 psi	965710 psi
PARALLAM PSL 1.8E		2400 psi	1755 psi	190 psi	425 psi	2500 psi	1800000 psi	914880 psi
PARALLAM PSL 2.0E		2900 psi	2025 psi	290 psi	750 psi	2900 psi	2000000psi	1016535 psi
TIMBERSTRAND LSL1.3E		1900 psi	1075 psi	400 psi	680 psi	1400 psi	1300000psi	660750 psi
TIMBERSTRAND LSL1.55E		2325 psi	1070 psi	310 psi	800 psi	2050 psi	1550000psi	787815 psi

- ALL EXTERIOR WOOD MEMBERS EXPOSED TO WEATHER SHALL BE PRESSURE TREATED PER APPLICABLE CODES/STANDARDS.
- ALL FASTENERS/HARDWARE EXPOSED TO WEATHER OR IN CONTACT WITH TREATED WOOD SHALL BE HOT DIP GALVANIZED OR STAINLESS STEEL OR Z-MAX COATED OR APPROVED FOR SUCH USE BY MANUFACTURER.
- PREVENT DIRECT CONTACT OF INTERIOR WOOD WITH CONCRETE OR MASONRY. PROTECT ALL WOOD FROM MOISTURE BY APPLYING APPROVED WRAP AND AVOID DIRECT CONTACT WITH MASONRY OR CONCRETE.
- CONTRACTOR SHALL SUBMIT SHOP DRAWINGS FOR ENGINEER'S REVIEW AND APPROVAL PRIOR TO ORDERING JOISTS FOR CONSTRUCTION.
- FLOOR & ROOF FRAMING/DIRECTION SHOWN ON THE DRAWINGS ARE SCHEMATIC AND FOR REFERENCE ONLY AND SHALL NOT BE CONSIDERED AS SHOP DRAWINGS. SHOP DRAWINGS FROM MANUFACTRER SHALL BE FOLLOWED FOR JOIST/TRUSS PLACEMENTS.
- ALL MECHANICAL, PLUMBING ELECTRICAL OR ANY OTHER COMPONENTS FROM OTHER DISCIPLINES SHALL BE COORDINATED BY MANUFACTURER IN SHOP DRAWINGS AS WELL AS ON THE FIELD. NOTIFY ARCHITECT/STRUCTURAL ENGINEER IF ANY DESCRIPANCY OR CONFLICT FOUND.
- ALL STRUCTURAL FRAMING MEMBERS SUPPORTING FLOOR JOISTS/TRUSSES ARE DESIGNED BASED ON LAYOUT REPRESENTED ON DRAWINGS. ANY MODIFICATION, CHANGE OR ADDITION SHALL NOT BE DONE WITHOUT PRIOR APPROVAL BY ARCHITECT/ENGINEER. SHOP DRAWINGS SHALL BE SUBMITTED FOR REVIEW FOR ANY SUCH CHANGE.
- ROOF/FLOOR TRUSS MANUFACTURER SHALL PROVIDE NECESSARY BRACING TO WEB MEMBERS AS REQUIRED BY GOVERNING CODE/STANDARD.
- ALL ROOF SHEATHING SHALL BE APA RATED 7/16" C-C, C-D OR STRUCTURAL II WITH SPAN RATING OF 48/24 PER "AMERICAN PLYWOOD ASSOCIATION". PROVIDE MIN. NAILING PATTERN W/ 8d COMMON NAILS @ 6" O.C. ON EDGES AND 12" O.C. IN FIELD. PROVIDE PLYWOOD CLIPS AT PLYWOOD EDGES BETWEEN EACH FRAMING MEMBER.
- ALL FLOOR SHEATHING SHALL BE 3/4" THICK T&G APA RATED AND WITH SPAN RATING OF 48/24 OR STURD-I-FLOOR 24" O.C. RATED PLYWOOD SHALL BE GLUED AND NAILED. INSTALL 100% GLUE LINE AND MIN. NAILING PATTERN OF 10d COMMON NAILS @ 6" O.C. ON EDGE SUPPORTS AND 12" O.C. INTERMEDIATE SUPPORTS.
- ALL EXTERIR STUD WALL SHEATHING SHALL BE MIN. 7/16" APA RATED NAILED WITH 8d NAILS @ 6" O.C. ON EDGES AND 12" O.C. IN FIELD U.N.O. REFER TO SHEAR WALL SCHEDULE FOR MORE INFORMATION.
- ALL WOOD PLATE SPLICES SHALL BE STAGGERED AT 4'-0" MIN.
- PROVIDE MIN. (2) 2x12 UP TO 4'-0" SPAN, (2) ML10 FOR 4'-0" TO 6'-0" SPAN, (2) ML12 FOR 6'-0" TO 9'-0" SPAN WHERE HEADER/LINTEL/BEAM SIZES ARE NOT SPECIFIED ON PLANS. ANY SPANS LARGER THAN 9'-0" SUPPORITNG FRAMING MEMBERS (POSTS/BEAMS/BEARING WALLS) AND NOT SPECIFIED ON PLANS SHALL BE NOTIFIED TO ENGINEER IMMEDIATELY.
- PROVIDE MIN. DOUBLE JOISTS OR SPECIAL FLOOR TRUSS UNDER (2) 2x POSTS AND (2) PLY MICROLAM LVL OR SPECIAL FLOOR TRUSS TO MATCH FLOOR THICKNESS UNDER (3) 2x POSTS UNLESS NOTED OTHERWISE ON THE PLAN. CONTRACTOR SHALL NOTIFY ENGINEER FOR SUPPORTING STRUCTURAL MEMBER FOR ALL OTHER POST SIZES COMING FROM ABOVE.
- PROVIDE MIN. (3) 2x POSTS UNDER ALL BEAMS/GIRDER TRUSSES/HEADERS U.N.O. ON PLANS.
- PROVIDE SOLID BLOCKING WITHIN FLOOR SYSTEM FOR POSTS/JACKSTUDS COMING FROM ABOVE.
- ALL POSTS/JACKS SHALL CONTINUE DOWN TO FOUNDATION/STRUCTURAL MEMBERS SUCH AS BEAMS/GIRDERS/GIRDER TRUSSES. NOTIFY ENGINEER IF ANY DESCRIPANCY FOUND DURING CONSTRUCTION.
- PROVIDE DOUBLE JOISTS OR SPECIAL TRUSS UNDER ALL WALLS/PARTITIONS EXTEND 1/2 OR MORE OF FRAMING SPAN.
- PROVIDE BLOCKING BETWEEN TOP FLANGE/CHORD OF JOISTS/FLOOR TRUSS SUPPORTING PARTITION WALL FROM ABOVE.
- PROVIDE FULL HEIGHT BLOCKING BETWEEN FLOOR JOISTS/TRUSSES SUPPORTING BEARING WALL FROM ABOVE.
- ALL DIMENSION LUMBER SHALL BE DRESSED S4S AND SHALL BEAR GRADE STAMP OF THE MANUFACTURER'S ASSOCIATION.
- ALL LUMBER SHALL BE SEASONED AND FREE FROM WRAP.
- PROVIDE SOLID BLOCKING BETWEEN JOISTS AND RAFTERS AT ALL BEARING POINTS AND AT MIN. OF 8'-0" O.C.
- PROVIDE STRONG BACKS AT MIN. OF 10'-0" O.C. AT ALL FLOOR TRUSSES.
- PROVIDE CONTINUOUS RIM BOARD AT PERIMETER AND AT END BEARING WALLS WHEN I-JOISTS ARE USED FOR FLOOR FRAMING.
- PROVIDE MIN. 1 3/4" BEARING AT END AND 3 1/2" MIN. BEARING AT INTERMEDIATE SUPPORT WHEN I-JOISTS ARE USED FOR FLOOR FRAMING.
- PROVIDE WEB-STIFFENERS, SQUASH BLOCKS, BEARING BLOCKS, BLOCKING PANELS, FILLER BLOCKS, BACKER BLOCKS AS RECOMMENDED BY MANUFACTURER. REFER TO MANUFACTURER'S GUIDELINES FOR INSTALLATION AND FASTENING.
- PRE-ENGINEERED/PRE-FABRICATED WOOD ROOF/FLOOR TRUSSES SHALL BE IN ACCORDANCE WITH "DESIGN SPECIFICATIONS FOR METAL PLATE CONNECTED WOOD TRUSSES " BY "TRUSS PLATE IINSTUTE (TPI - I)"
- PROVIDE HURRICANE CLIPS TO RESIST UPLIFT AS SHOWN ON SHOP DRAWINGS. PROVIDE SIMPSON "H2.5" HURRICANE CLIP MIN.
- REFER & FOLLOW "BCSI" GUIDES B1 THRU B11 FOR HANDLING, INSTALLING, RESTRAINING AND BRACING OF METAL PLATE CONNECTED WOOD TRUSSES.
- INSTALLATION OF PRE-ENGINEERED/PRE-FABRICATED ROOF AND/OR FLOOR TRUSSES SHALL BE DONE PER TRUSS DESIGN DRAWINGS AND TRUSS ENGINEER SHALL BE RESPONSIBLE FOR PROVIDING ANY REPAIRS OR ALTERATIONS IN TRUSS CONFIGURATIONS.

EXISTING CONDITIONS:

- ALL EXISTING STRUCTURAL MEMBERS TO REMAIN INTACT UNLESS SPECIFICALLY NOTED TO BE REMOVED BY MOST RECENT DEMOLITION DOCUMENTS BY ARCHITECT OR OTHERWISE NOTED ON THESE DRAWINGS.
- ALL INFORMATION ON THESE DRAWINGS RELATED TO EXISTING CONDITIONS ARE PROVIDED BASED ON AVAILABLE CONTRACT DRAWINGS OR INFORMATION PER ARCHITECTURAL DRAWINGS. CONTRACTOR IS RESPONSIBLE FOR FIELD VERIFYING ALL EXISTING CONDITIONS AND NOTIFY STRUCTURAL ENGINEER IF ANY DISCREPANCY IS FOUND BETWEEN CONTRACT DRAWINGS AND EXISTING CONDITIONS.
- THE PORTION OF THE STRUCTURE THAT IS SHOWN TO BE STRUCTURALLY MODIFIED HAVE BEEN DESIGNED ACCORDING TO BEST ENGINEERING PRACTICE. HOWEVER WE DO NOT ASSUME RESPONSIBILITY FOR ANY DAMAGE THAT MAY ARISE FOR ANY PORTION OF THE BUILDING NOT REDESIGNED, ALTERED OR CONSTRUCTED UNDER THIS SET OF DESIGN DRAWINGS. WE DO NOT ASSUME ANY RESPONSIBILITY OR LIABILITY TOWARDS DEFICIENCIES IN THE CONDITION OF THE BUILDING PRIOR TO RENOVATION PER NEW CONTRACT DRAWINGS.
- CONTRACTOR SHALL FIELD VERIFY ALL DIMENSIONS PRIOR TO COMMENCEMENT OF ANY WORK.

WOOD FASTENERS/CONNECTORS:

- FASTENERS USED BELOW GRADE TO ATTACH PLYWOOD TO EXTERIOR WALLS OR CRAWL SPACE STUD WALLS OR KNEE WALL CONSTRUCTION OVER FOUNDATION SHALL BE TYPE 304 OR 316 STAINLESS STEEL.
- ALL MECHANICAL WOOD CONNECTORS SHALL BE CLEARLY SPECIFIED ON SHOP DRAWINGS SUPPLIED BY MANUFACTURER AND SHALL BE DESIGNED FOR APPROPRIATE LOAD AS REQUIRED BY GOVERNING CODE/JURISDICTION.
- ALL MECHANICAL CONNECTORS AND/OR FASTENERS INCLUDING NAILS/BOLTS/SCREWS EXPOSED TO CONCRETE/MASONRY/WEATHER SHALL BE HOT DIP GALVANIZED OR STAINLESS STEEL OR APPROVED BY MANUFACTURER FOR SUCH USE.
- BOLT HOLES SHALL BE A MIN. OF 1/32" TO A MAX. OF 1/16" LARGER THAN THE BOLT DIAMETER.
- A METAL PLATE OR WASHER NOT LESS THAN A STANDARD OVERSIZED CUT WASHER SHALL BE BETWEEN THE WOOD AND THE BOLT HEAD AND BETWEEN THE WOOD AND THE NUT.
- SNUG TIGHT ALL BOLTS. TIGHTEN CONNECTIONS WHICH HAVE LOOSENED DUE TO WOOD SHRINKAGE.
- INSTALL BOLTS TO EXCLUDE THREADED PORTIONS OF BOLTS FROM SHEAR PLANES.
- LAG SCREWS SHALL BE INSTALLED IN PRE-DILLED HOLES.
- THE CLEARANCE HOLE FOR THE SHANK SHALL HAVE THE SAME DIAMETER AS THE SHANK AND THE SAME DEPTH OF PENETRATION AS THE LENGTH OF THE SHANK.
- THE LEAD HOLE FOR THE THREADED PORTION SHALL HAVE A DIAMETER EQUAL TO 75% FOR SOUTHERN PINE, 70% FOR OTHER SPECIES OF THE SHANK DIAMETER AND A MIN. LENGTH EQUAL TO LENGTH OF THREADED PORTION.
- WOOD SILL PLATE SHALL BE ANCHORED TO CONCRETE/MASONRY W/ 1/2" DIA. ANCHOR BOLTS WITH MIN. 7" EMBEDMENT AND 6'-0" O.C. AND 12" MAX. FROM PLATE ENDS OR SPLICES. REFER TO MANUFACTURER'S RECOMMENDATIONS FOR ALTERNATE ANCHORS. REFER TO SHEAR WALL SCHEDULE FOR ADDITIONAL ANCHORAGE REQUIREMENTS. PROVIDE MIN. 3"x3" WASHERS TO ANCHOR BOLTS WITH ENGINEERED SHEAR WALLS (SW) ARE SPECIFIED ON DRAWINGS.
- REFER TO FASTENING SCHEDULE FOR MORE INFORMATION.

NOTES ON FASTENER SCHEDULE (IRC 2018 - TABLE R602.3(1)):

a. ALL NAILS ARE SMOOTH-COMMON, BOX OR DEFORMED SHANKS EXCEPT WHERE OTHERWISE STATED. NAILS USED FOR FRAMING AND SHEATHING CONNECTIONS SHALL HAVE MIN. AVERAGE BENDING YIELD STRENGTHS AS SHOWN 80 ksi FOR SHANK DIAMETER OF 0.192 INCHES, 90 ksi FOR SHANK DIAMETERS LARGER THAN 0.142 INCHES BUT NOT LARGER THAN 0.177 INCHES AND 100 ksi FOR SHANK DIAMETERS OF 0.142 INCHES OR LESS
b. STAPLES ARE 16 GAGE WIRE AND HAVE A MINIMUM 7/16 INCH ON DIAMETER CROWN WIDTH
c. NAILS SHALL BE SPACED AT NOT MORE THAN 6" O.C. AT ALL SUPPORTS WHERE SPANS ARE 48" OR GREATER
d. 4'-0" x 8'-0" OR 4'-0" x 9'-0" PANELS SHALL BE APPLIED VERTICALLY.
e. SPACING OF FASTENERS NOT INCLUDED IN THIS TABLE SHALL BE BASED ON TABLE R602.3(2) OF IRC 2018.
f. FOR REGIONS HAVING BASIC WIND SPEED OF 110 MPH OR GREATER 8d DEFORMED (2 1/2" x 0.120) NAILS SHALL BE USED FOR ATTACHING PLYWOOD AND WOOD STRUCTURAL PANEL ROOF SHEATHING TO FRAMING WITHIN MIN. 48" DISTANCE FROM GABLE END WALLS, IF MEAN ROOF HEIGHT IS MORE THAN 25'-0" UP TO 35'-0" MAXIMUM.
g. FOR REGIONS HAVING BASIC WIND SPEED OF 100 MPH OR LESS, NAILS FOR ATTACHING WOOD STRUCTURAL PANEL ROOF SHEATHING TO GABLE END WALL FRAMING SHALL BE SPACED 6" O.C. WHEN BASIC WIND SPEED IS GREATER THAN 100 MPH, NAILS FOR ATTACHING PANEL ROOF SHEATHING TO INTERMEDIATE SUPPORTS SHALL BE SPACED 6" O.C. FOR MIN. 48" DISTANCE FROM RIDGES, EAVES AND GABLE END WALLS; AND 4" O.C. TO GABLE END WALL FRAMING.
h. GYPSUM SHEATHING SHALL CONFORM TO ASTM C 1396 AND SHALL BE INSTALLED IN ACCORDANCE WITH GA 253. FIBERBOARD SHEATHING SHALL CONFORM TO ASTM C 208.
i. SPACING OF FASTENERS ON FLOOR SHEATHING PANEL EDGES APPLIES TO PANEL EDGES SUPPORTED BY FRAMING MEMBERS AND REQUIRED BLOCKING AND AT ALL FLOOR PERIMETERS ONLY. SPACING OF FASTENERS ON ROOF SHEATHING PANEL EDGES APPLIES TO PANEL EDGES SUPPORTED BY FRAMING MEMBERS AND REQUIRED BLOCKING. BLOCKING OF ROOF OR FLOOR SHEATHING PANEL EDGES PERPENDICULAR TO THE FRAMING MEMBERS NEED NOT BE PROVIDED EXCEPT AS REQUIRED BY OTHER PROVISIONS OF THE CODE. FLOOR PERIMETER SHALL BE SUPPORTED BY FRAMING MEMBERS OR SOLID BLOCKING.

ABBREVIATIONS:

ARCH=	ARCHITECTURAL
B.E.W=	BOTTOM EACH WAY
BM=	BEAM
BRG=	BEARING
COL=	COLUMN
CONC.=	CONCRETE
CONT=	CONTINUOUS
DBL=	DOUBLE
EA=	EACH
E.E.=	EACH END
EXP=	EXPANSION
EXT.=	EXTERIOR
FDN=	FOUNDATION
FTG=	FOOTING
G.T.=	GIRDER TRUSS
HDR=	HEADER
INT.=	INTERIOR
INFO	INFORMATION
J=	JACK STUD
MANUF=	MANUFACTURER
MIN=	MINIMUM
MAX=	MAXIMUM
ML=	MICROLAM
N.T.S=	NOT TO SCALE
O.C.=	ON CENTER
PLYWD=	PLYWOOD
P.T.=	PRESSURE TREATED
P.A. =	POST FROM ABOVE
REQD=	REQUIRED
S=	KING STUD
SPF=	SPRUCE PINE FIR
SP=	SOUTHERN PINE
STL=	STEEL
TYP=	TYPICAL
W/=	WITH
WD=	WOOD
WWF=	WELDED WIRE FABRIC
U.N.O.=	UNLESS NOTED OTHERWISE

REVIEWED
By Michael Kyne at 2:13 pm, May 23, 2022

APPROVED
Montgomery County
Historic Preservation Commission

NO.	DESCRIPTION OF BUILDING ELEMENT	FASTNERS
1	BLOCKING BETWEEN JOISTS OR RAFTERS TO TOP PLATE (TOE NAIL)	(3) 8d (2 1/2" x 0.113")
2	CEILING JOISTS TO PLATE (TOE NAIL)	(3) 8d (2 1/2" x 0.113")
3	CEILING JOISTS NOT ATTACHED TO PARALLEL RAFTER, LAPS OVER PARTIAIONS (FACE NAIL)	(3) 10d
4	COLLAR TIE RAFTER (FACE NAIL) OR 1 1/4" x 20 GAGE RIDGE STRAP	(3) 10d (3" x 0.128")
5	RAFTER TO PLATE (TOE NAIL)	(2) 16d (3 1/2" x 0.135")
6	ROOF RAFTERS TO RIDGE, VALLEY OR HIP RAFTERS TOE NAILS FACE NAILS	(4) 16d (3 1/2" x 0.135") (3) 16d (3 1/2" x 0.135")
7	BUILT-UP CORNER STUDS	10d (3" x 0.128") @ 24" O.C.
8	BUILT-UP HEADER, TWO PIECES W/ 1/2" SPACER	16d (3 1/2" x 0.135") @ 16" O.C. ALONG EACH EDGE
9	CONTINUED HEADER, TWO PIECES	16d (3 1/2" x 0.135") @ 16" O.C. ALONG EACH EDGE
10	CONTINUOUS HEADER TO STUD (TOE NAIL)	(4) 8d (2 1/2" x 0.113")
11	DOUBLE STUDS (FACE NAILS)	10d (3" x 0.128") @ 24" O.C.
12	DOUBLE TOP PLATES (FACE NAILS)	10d (3" x 0.128") @ 24" O.C.
13	DOUBLE TOP PLATES, MIN. 48" OFFSET OF END JOINSTS (FACE NAILS IN LAPPED AREA)	(8) 16d (3 1/2" x 0.135")
14	SOLE PLATE TO JOIST OR BLOCKING (FACE NAIL)	16d (3 1/2" x 0.135") @ 16" O.C.
15	SOLE PLATE TO JOIST OR BLOCKING (FACE NAIL) AT BRACED WALL PANELS	(3) 16d (3 1/2" x 0.135") @ 16" O.C.

NO.	DESCRIPTION OF BUILDING ELEMENT	FASTNERS
16	STUD TO SOLE PLATE (TOE NAIL)	(3) 8d (2 1/2" x 0.113") OR (2) 16d (3 1/2" x 0.135")
17	TOP OR SOLE PLATE TO STUD (END NAIL)	(2) 16d (3 1/2" x 0.135")
18	TOP PLATES, LAPS AT CORNERS AND INTERSECTIONS (FACE NAIL)	(2) 10d (3" x 0.128")
19	1" BRACE TO EACH STUD AND PLATE (FACE NAIL)	(2) 8d (2 1/2" x 0.113") OR (2) STAPLES 1 3/4"
20	1" x 6" SHEATHING TO EACH BEARING (FACE NAIL)	(2) 8d (2 1/2" x 0.113") OR (2) STAPLES 1 3/4"
21	1" x 8" SHEATHING TO EACH BEARING (FACE NAIL)	(2) 8d (2 1/2" x 0.113") OR (3) STAPLES 1 3/4"
22	WIDER THAN 1" x 8" SHEATHING TO EACH BEARING (FACE NAIL)	(3) 8d (2 1/2" x 0.113") OR (4) STAPLES 1 3/4"
23	JOIST TO SILL OR GIRDER (TOE NAIL)	(3) 8d (2 1/2" x 0.113")
24	1" x 6" SUBFLOOR OR LESS TO EACH JOIST (FACE NAIL)	(2) 8d (2 1/2" x 0.113") OR (2) STAPLES 1 3/4"
25	2" SUBFLOOR TO JOIST OR GIRDER (BLIND AND FACE NAIL)	(2) 16d (3 1/2" x 0.135")
26	RIM JOIST TO TOP PLATE (TOE NAIL) ROOF APPLICATOIN ALSO	8d (2 1/2" x 0.113") @ 6" O.C.
27	2" PLANKS (PLANK & BEAM - FLOOR & ROOF)	(2) 16d (3 1/2" x 0.135") @ E.E.
28	BUILT-UP GIRDERS & BEAMS, 2" LUMBER LAYERS	10d (3" x 0.128") NAIL EA. LAYER 32" O.C. AT TOP AND BOTT. STAGGERED. TWO NAILS AT ENDS AND AT EA. SPLICE.
29	LEDGER STRIP SUPPORTING JOISTS OR RAFTERS	(3) 16d (3 1/2" x 0.135") AT EACH JOIST OR RAFTER

NO.	BUILDING MATERIALS	DESCRIPTION OF FASTENERS	NAILING PATTERN: EDGES	NAILING PATTERN: INTERMEDIATE SUPPORTS
WOOD STRUCTURAL PANELS, SUBFLOOR, ROOF AND INTERIOR WALL SHEATHING TO FRAMING & PARTICLE BOARD WALL SHEATHING TO FRAMING				
30	3/8" - 1/2"	6d (2" x 0.113") COMMON NAIL (SUBFLOOR, WALL) (j) 8d (2 1/2" x 0.131") COMMON NAIL (ROOF)	6"	12" (g)
31	5/16" - 1/2"	6d (2" x 0.113") COMMON NAIL (SUBFLOOR, WALL) 8d (2 1/2" x 0.131") COMMON NAIL (ROOF) (f)	6"	12" (g)
32	19/32" - 1"	8d (2 1/2" x 0.131") COMMON NAIL	6"	12" (g)
33	1 1/8" - 1 1/4"	10d (3" x 0.148") COMMON NAIL OR 8d (2 1/2" x 0.131") DEFORMED NAIL	6"	12"
OTHER WALL SHEATHING (h)				
34	1/2" STRUCTURAL CELLULOSIC FIBERBOARD SHEATHING	1/2" GALVANIZED ROOFING NAIL, 7/16' CROWN OR 16 GA. STAPLE, 1" CROWN & 1 1/4" LONG	3"	6"
35	25/32" STRUCTURAL CELLULOSIC FIBERBOARD SHEATHING	1 3/4" GALVANIZED ROOFING NAIL, 7/16' CROWN OR 16 GA. STAPLE, 1" CROWN & 1 1/2" LONG	3"	6"
36	1/2" GYPSUM SHEATHING (d)	1 1/2" GALVANIZED ROOFING NAIL OR 1 1/2" LONG GALVANIZED STAPLES, OR 1 1/4" SCREWS TYPE W OR S.	7"	7"
37	1/2" GYPSUM SHEATHING (d)	1 3/4" GALVANIZED ROOFING NAIL OR 1 5/8" LONG GALVANIZED STAPLES, OR 1 5/8" SCREWS TYPE W OR S.	7"	7"
WOOD STRUCTURAL PANELS, COMBINATION OF SUBFLOOR UNDERLAYMENT TO FRAMING				
38	3/4" AND LESS	6d (2" x 0.120") DEFORMED NAIL OR 8d (2 1/2" x 0.131") COMMON NAIL	6"	12"
39	7/8" - 1"	8d (2 1/2" x 0.131") COMMON NAIL OR 8d (2 1/2" x 0.120") DEFORMED NAIL	6"	12"
40	1 1/8" - 1 1/4"	10d (3" x 0.148") COMMON NAIL OR 8d (2 1/2" x 0.120") DEFORMED NAIL	6"	12"

© COPYRIGHT 2016
Structural Engineering content of this drawings are property of structBIM LLC and are issued for this project only. Any re-use or re-production of these drawings shall not be done without written consent of structBIM LLC. These drawings are to be read in conjuction with project specifications and drawings from other consultants. These drawings shall not be used as shop drawings. Do not scale drawings, use dimensions as specified.

GTMARCHITECTS

7735 OLD GEORGETOWN ROAD
SUITE 700
BETHESDA, MD 20814
(240)333-2000
(240)333-2001 FAX
WWW.GTMARCHITECTS.COM

Seal

Consultant
structBIM ENGINEERS
WE DESIGN....WE BIM
46400 BENEDICT DR, SUITE #211
PHONE: 703-657-4481
E-MAIL: info@structBIM.com

Project
21 HIGH STREET, LOT 3
BROOKVILLE, MD 20833

I certify that these documents were prepared or approved by me, and that I am a duly licensed Professional Engineer under the laws of the State of Maryland, license number 40082, Expiration Date: 02-13-2023.

N

Issue Description	Date

structBIM Project No.	21-0245
Checked By	KK
Drawn By	KK
Scale	1/4" = 1'-0"

Sheet Title
GENERAL NOTES

Sheet No.
SG

FILE NAME:

COPYRIGHT, 2016 structBIMEngineers, LLC.

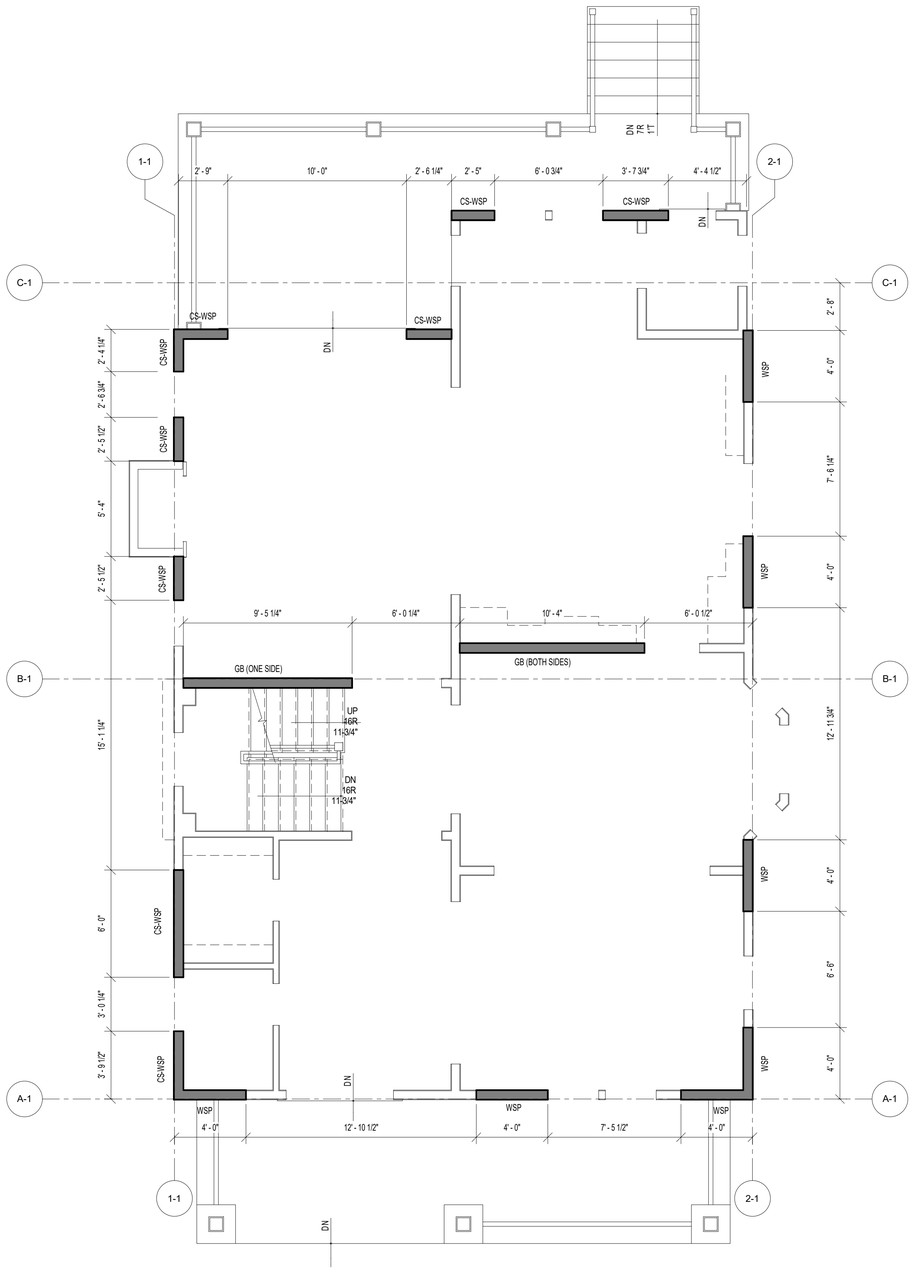

1 SWB1 FIRST FLOOR WALL BRACING PLAN
SCALE: 1/4" = 1'-0"

Ultimate Wind Speed (mph)	115									
BWL Designation	A-1		B-1		C-1		1-1		2-1	
No. of Floors above BWL	1		1		1		1		1	
BWP Method	WSP		GB		CS-WSP		WSP		WSP	
Average BWL Spacing (ft)	23.5		22.75		22.16		32.33		32.33	
Tabular Requirement (ft)	8.55		14.01		7.04		11.20		11.20	
Adjustments: Exposure	B	1.00	B	1.00	B	1.00	B	1.00	B	1.00
Adjustments: Eave-to-Ridge Ht. (ft)	13.50	1.11	13.50	1.11	13.50	1.11	13.50	1.11	13.50	1.11
Adjustments: Max. Wall Ht. (ft)	9.00	0.95	9.00	0.95	9.00	0.95	9.00	0.95	9.00	0.95
Adjustments: No. of BWLs	2	1.00	2	1.00	3	1.30	3	1.30	3	1.30
Adjustments: Omit Interior Finish?	No	1.00	No	1.00	No	1.00	No	1.00	No	1.00
Adjustments: Added Hold-downs?	No	1.00	No	1.00	No	1.00	No	1.00	No	1.00
Adjustments: Joints Blocked?	Yes	1.00	Yes	1.00	Yes	1.00	Yes	1.00	Yes	1.00
Adjustments: Fasteners @ 4" o.c.?	No	1.00	No	1.00	No	1.00	No	1.00	No	1.00
Required BWP Length (ft)	8.98		14.71		9.61		15.28		15.28	
Actual BWPs: Contributing Length (ft) — BWP	Method	Length	Method	Length	Method	Length	Method	Length	Method	Length
1	WSP	4.00	GB (ss)	4.75	CS-WSP	2.75	CS-WSP	3.75	WSP	4.00
2	WSP	4.00	GB (ds)	10.33	CS-WSP	2.50	CS-WSP	6.00	WSP	4.00
3	WSP	4.00			CS-WSP	3.58	CS-WSP	2.50	WSP	4.00
4					CS-WSP	2.50	CS-WSP	2.50	WSP	4.00
5							CS-WSP	2.33		
6										
7										
Actual BWP Length (ft)	12.00		15.08		11.33		17.08		16.00	
Actual ≥ Required?	PASS		PASS		PASS		PASS		PASS	
BWPs ≤ 20' Apart?	Yes		Yes		Yes		Yes		Yes	
≥ 2 Panels in BWL?	Yes		Yes		Yes		Yes		Yes	
BWP 10' from Ends?	Yes		Yes		Yes		Yes		Yes	
Continuous Sheathing End Conditions	End 1	End 2	End 1	End 2	End 1	End 2	End 1	End 2	End 1	End 2
	3	3	NA	NA	3	3	3	3	1	1
BWL Compliance	PASS		PASS		PASS		PASS		PASS	

Actual BWPs: WSP:Prectual; SFB:Prectual; GB(ss):0.5'actual; GB(ds):1'actual; CS-PF:4.1.5'actual; PF:0.41.5'actual; PF:n/a2'; AB:n/a1'

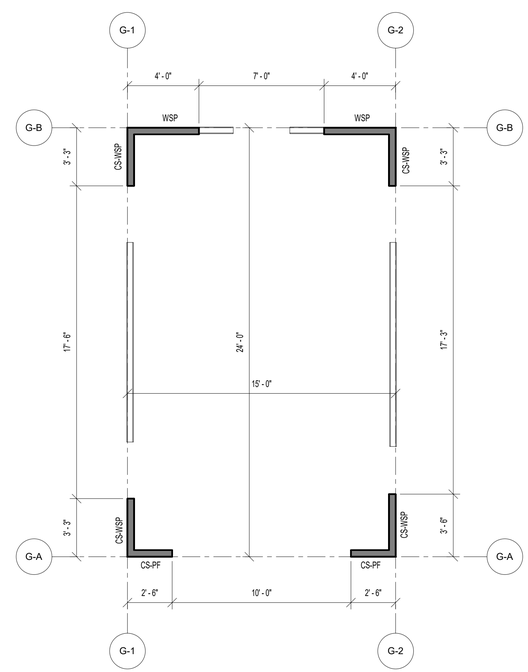

2 SWB1 FIRST FLOOR WALL BRACING PLAN
SCALE: 1/4" = 1'-0"

PLAN LEGENDS & SYMBOLS:

- INDICATES BEARING WALL
- INDICATES DRAIN HOLE FROM ABOVE
- INDICATES JOIST/TRUSS HANEGR (REFER TO SHOP DWGS)
- INDICATES FRAMING DIRECTION
- INDICATES REBAR DIRECTION
- (_J+_S) — INDICATES NO. OF KING STUDS AT EACH END; INDICATES NO. OF JACK STUDS AT EACH END
- WF?? — INDICATES WALL FOOTING; WIDTH OF WALL FOOTING IN INCHES
- TS?? — INDICATES THICKENED SLAB; WIDTH OF THICKENED SLAB IN INCHES
- Fx.x — INDICATES ISOLATED COLUMN FOOTING; INDICATES SIZE OF FOOTING IN DECIMAL FEET
- ML?? — MICROLAM LVL 2.0E; DEPTH OF MICROLAM LVL IN INCHES
- LSL?? — LAMINATED STRAND LUMBER 1.7E; DEPTH OF TIMBERSTAND LSL BEAM IN INCHES
- PSL?? — PARALLAM STRAND LUMBER 2.0E; WIDTHxDEPTH OF MEMBER
- CC — COLUMN CAP
- CB — COLUMN BASE
- HD — HOLD DOWN ANCHOR
- MS — METAL STRAP
- H — JOIST/TRUSS/BEAM HANGER
- HC — HURRICANE CLIPS

WALL BRACING/SHEAR WALL SCHEDULE

MARK	DESCRIPTION	FASTENING PATTERN
CS-PF	7/16" APA RATED OSB SHEATHING	8d COMMON NAILS (2 1/2" x 0.131") @ 6" O.C. ON EDGES & 12" O.C. IN-FIELD
CS-WSP	7/16" APA RATED OSB SHEATHING	8d COMMON NAILS (2 1/2" x 0.131") @ 6" O.C. ON EDGES & 12" O.C. IN-FIELD
GB (BOTH SIDES)	1/2" GYPSUM WALL BOARD SHEATHING	1 1/2 " GALVANIZED ROOFING NAILS OR 1 1/2" GALVANIZED STAPLES OR 1 1/4" SCREWS TYPE W OR S @ 7" O.C. ON EDGES & IN-FIELD
GB (ONE SIDE)	1/2" GYPSUM WALL BOARD SHEATHING	1 1/2 " GALVANIZED ROOFING NAILS OR 1 1/2" GALVANIZED STAPLES OR 1 1/4" SCREWS TYPE W OR S @ 7" O.C. ON EDGES & IN-FIELD
WSP	7/16" APA RATED OSB SHEATHING	8d COMMON NAILS (2 1/2" x 0.131") @ 6" O.C. ON EDGES & 12" O.C. IN-FIELD

REVIEWED
By Michael Kyne at 2:13 pm, May 23, 2022

APPROVED
Montgomery County
Historic Preservation Commission

© COPYRIGHT 2016
Structural Engineering content of this drawings are property of structBIM LLC and are issued for this project only. Any re-use or re-production of these drawings shall not be done without written consent of structBIM LLC. These drawings are to be read in conjuction with project specifications and drawings from other consultants. These drawings shall not be used as shop drawings. Do not scale drawings, use dimensions as specified.

GTM ARCHITECTS
7735 OLD GEORGETOWN ROAD
SUITE 700
BETHESDA, MD 20814
(240)333-2000
(240)333-2001 FAX
WWW.GTMARCHITECTS.COM

Seal

STATE OF MARYLAND — SHAH KANAK D — 40082 — PROFESSIONAL ENGINEER

Consultant

structBIM ENGINEERS
WE DESIGN....WE BIM
46400 BENEDICT DR, SUITE #211
PHONE: 703-657-4481
E-MAIL: info@structBIM.com

Project

21 HIGH STREET, LOT 3
BROOKVILLE, MD 20833

I certify that these documents were prepared or approved by me, and that I am a duly licensed Professional Engineer under the laws of the State of Maryland, license number 40082. Expiration Date: 02-13-2023.

Issue Description	*Date*

structBIM Project No.	21-0245
Checked By	KK
Drawn By	KK
Scale	1/4" = 1'-0"

Sheet Title
FIRST FLOOR WALL BRACING PLAN

Sheet No.
SWB1

COPYRIGHT, 2016 structBIMEngineers, LLC.
PLOTTED ON: 4/15/2022 12:50:13 PM

FILE NAME:

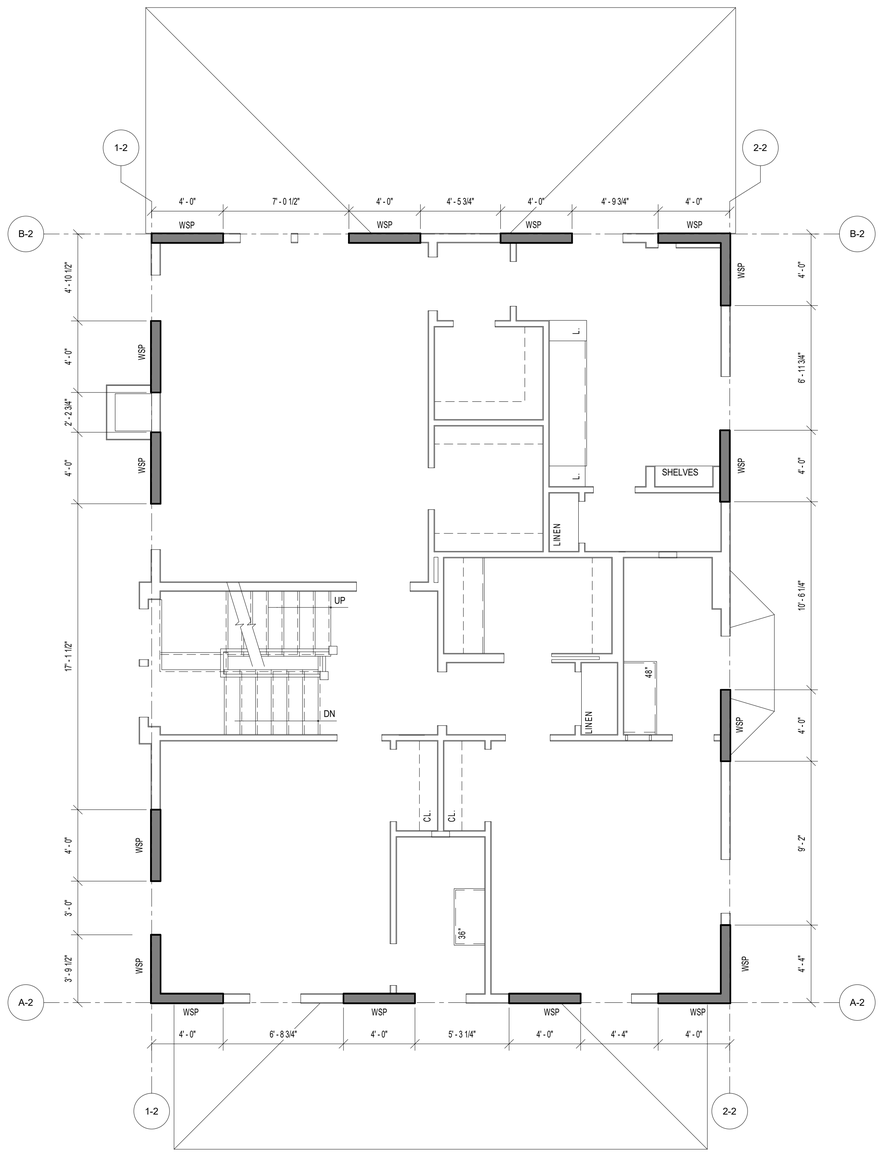

1 SWB2 SECOND FLOOR WALL BRACING PLAN

SCALE: 1/4" = 1'-0"

Ultimate Wind Speed (mph)		115							
BWL Designation		A-2		B-2		1-2		2-2	
No. of Floors above BWL		0		0		0		0	
BWP Method		WSP		WSP		WSP		WSP	
Average BWL Spacing (ft)		43		43		32.33		32.33	
Tabular Requirement (ft)		7.60		7.60		5.85		5.85	
Adjustments	Exposure	B	1.00	B	1.00	B	1.00	B	1.00
	Eave-to-Ridge Ht. (ft)	13.50	1.21	13.50	1.21	13.50	1.21	13.50	1.21
	Max. Wall Ht. (ft)	9.00	0.95	9.00	0.95	9.00	0.95	9.00	0.95
	No. of BWLs	2	1.00	2	1.00	2	1.00	2	1.00
	Omit Interior Finish?	No	1.00	No	1.00	No	1.00	No	1.00
	Added Hold-downs?	No	1.00	No	1.00	No	1.00	No	1.00
	Joints Blocked?	Yes	1.00	Yes	1.00	Yes	1.00	Yes	1.00
	Fasteners @ 4" o.c.?	No	1.00	No	1.00	No	1.00	No	1.00
Required BWP Length (ft)		8.74		8.74		6.72		6.72	

Actual BWP's	BWP	Method	Length	Method	Length	Method	Length	Method	Length
Contributing Length (ft) WSP=factual SFB=factual OB(ss)=0.5factual OB(dc)=factual CS-PF=1.5factual PFS=1.5factual PF=total AB=total	1	WSP	4.00	WSP	4.00	WSP	3.75	WSP	4.00
	2	WSP	4.00	WSP	4.00	WSP	4.00	WSP	4.00
	3	WSP	4.00	WSP	4.00	WSP	4.00	WSP	4.00
	4	WSP	4.00	WSP	4.00	WSP	4.00	WSP	4.00
	5								
	6								
	7								
Actual BWP Length (ft)		16.00		16.00		15.75		16.00	
Actual ≥ Required?		PASS		PASS		PASS		PASS	
BWPs ≤ 20' Apart?		Yes		Yes		Yes		Yes	
≥ 2 Panels in BWL?		Yes		Yes		Yes		Yes	
BWP 10' from Ends?		Yes		Yes		Yes		Yes	
Continuous Sheathing End Conditions		End 1	End 2	End 1	End 2	End 1	End 2	End 1	End 2
		3	3	3	3	3	3	3	3
BWL Compliance		PASS		PASS		PASS		PASS	

REVIEWED
By Michael Kyne at 2:13 pm, May 23, 2022

APPROVED
Montgomery County
Historic Preservation Commission

PLAN LEGENDS & SYMBOLS:

- INDICATES BEARING WALL
- INDICATES DRAIN HOLE FROM ABOVE
- INDICATES JOIST/TRUSS HANEGR (REFER TO SHOP DWGS)
- INDICATES FRAMING DIRECTION
- INDICATES REBAR DIRECTION
- (_J+_S) — INDICATES NO. OF KING STUDS AT EACH END; INDICATES NO. OF JACK STUDS AT EACH END
- WF?? — INDICATES WALL FOOTING; WIDTH OF WALL FOOTING IN INCHES
- TS?? — INDICATES THICKENED SLAB; WIDTH OF THICKENED SLAB IN INCHES
- F.x.x — INDICATES ISOLATED COLUMN FOOTING; INDICATES SIZE OF FOOTING IN DECIMAL FEET
- ML?? — MICROLAM LVL 2.0E; DEPTH OF MICROLAM LVL IN INCHES
- LSL?? — LAMINATED STRAND LUMBER 1.7E; DEPTH OF TIMBERSTAND LSL BEAM IN INCHES
- PSL?? — PARALLAM STRAND LUMBER 2.0E; WIDTHxDEPTH OF MEMBER
- CC — COLUMN CAP
- CB — COLUMN BASE
- HD — HOLD DOWN ANCHOR
- MS — METAL STRAP
- H — JOIST/TRUSS/BEAM HANGER
- HC — HURRICANE CLIPS

WALL BRACING/SHEAR WALL SCHEDULE

MARK	DESCRIPTION	FASTENING PATTERN
CS-PF	7/16" APA RATED OSB SHEATHING	8d COMMON NAILS (2 1/2" x 0.131") @ 6" O.C. ON EDGES & 12" O.C. IN-FIELD
CS-WSP	7/16" APA RATED OSB SHEATHING	8d COMMON NAILS (2 1/2" x 0.131") @ 6" O.C. ON EDGES & 12" O.C. IN-FIELD
GB (BOTH SIDES)	1/2" GYPSUM WALL BOARD SHEATHING	1 1/2 " GALVANIZED ROOFING NAILS OR 1 1/2" GALVANIZED STAPLES OR 1 1/4" SCREWS TYPE W OR S @ 7" O.C. ON EDGES & IN-FIELD
GB (ONE SIDE)	1/2" GYPSUM WALL BOARD SHEATHING	1 1/2 " GALVANIZED ROOFING NAILS OR 1 1/2" GALVANIZED STAPLES OR 1 1/4" SCREWS TYPE W OR S @ 7" O.C. ON EDGES & IN-FIELD
WSP	7/16" APA RATED OSB SHEATHING	8d COMMON NAILS (2 1/2" x 0.131") @ 6" O.C. ON EDGES & 12" O.C. IN-FIELD

© COPYRIGHT 2016
Structural Engineering content of this drawings are property of structBIM LLC and are issued for this project only. Any re-use or re-production of these drawings shall not be done without written consent of structBIM LLC. These drawings are to be read in conjuction with project specifications and drawings from other consultants. These drawings shall not be used as shop drawings. Do not scale drawings, use dimensions as specified.

GTM ARCHITECTS

7735 OLD GEORGETOWN ROAD
SUITE 700
BETHESDA, MD 20814
(240)333-2000
(240)333-2001 FAX
WWW.GTMARCHITECTS.COM

GTM

Seal

STATE OF MARYLAND — MICHAEL KANTOR — 40082 — PROFESSIONAL ENGINEER

Consultant

structBIM ENGINEERS
WE DESIGN....WE BIM
46400 BENEDICT DR, SUITE #211
PHONE: 703-657-4481
E-MAIL: info@structBIM.com

Project

21 HIGH STREET, LOT 3
BROOKVILLE, MD 20833

I certify that these documents were prepared or approved by me, and that I am a duly licensed Professional Engineer under the laws of the State of Maryland, license number 40082, Expiration Date: 02-13-2023.

Issue Description	*Date*

structBIM Project No.	21-0245
Checked By	KK
Drawn By	KK
Scale	1/4" = 1'-0"

Sheet Title
SECOND FLOOR WALL BRACING PLAN

Sheet No.

SWB2

COPYRIGHT, 2016 structBIMEngineers, LLC.

PLOTTED ON: 4/13/2022 12:56:15 PM

FILE NAME:

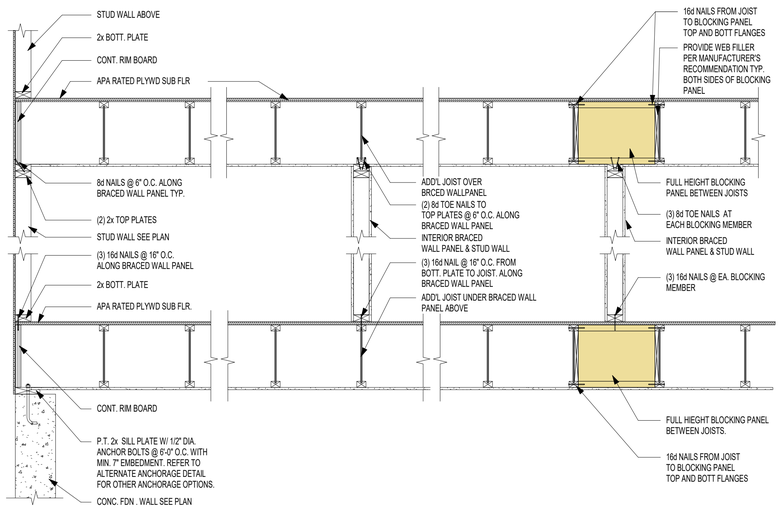

3 / SWB3 BRACED WALL PANEL PARALLEL TO I-JOISTS
SCALE: 3/4" = 1'-0"

WALL BRACING/SHEAR WALL SCHEDULE

MARK	DESCRIPTION	FASTENING PATTERN
CS-PF	7/16" APA RATED OSB SHEATHING	8d COMMON NAILS (2 1/2" x 0.131") @ 6" O.C. ON EDGES & 12" O.C. IN-FIELD
CS-WSP	7/16" APA RATED OSB SHEATHING	8d COMMON NAILS (2 1/2" x 0.131") @ 6" O.C. ON EDGES & 12" O.C. IN-FIELD
GB (BOTH SIDES)	1/2" GYPSUM WALL BOARD SHEATHING	1 1/2 " GALVANIZED ROOFING NAILS OR 1 1/2" GALVANIZED STAPLES OR 1 1/4" SCREWS TYPE W OR S @ 7" O.C. ON EDGES & IN-FIELD
GB (ONE SIDE)	1/2" GYPSUM WALL BOARD SHEATHING	1 1/2 " GALVANIZED ROOFING NAILS OR 1 1/2" GALVANIZED STAPLES OR 1 1/4" SCREWS TYPE W OR S @ 7" O.C. ON EDGES & IN-FIELD
WSP	7/16" APA RATED OSB SHEATHING	8d COMMON NAILS (2 1/2" x 0.131") @ 6" O.C. ON EDGES & 12" O.C. IN-FIELD

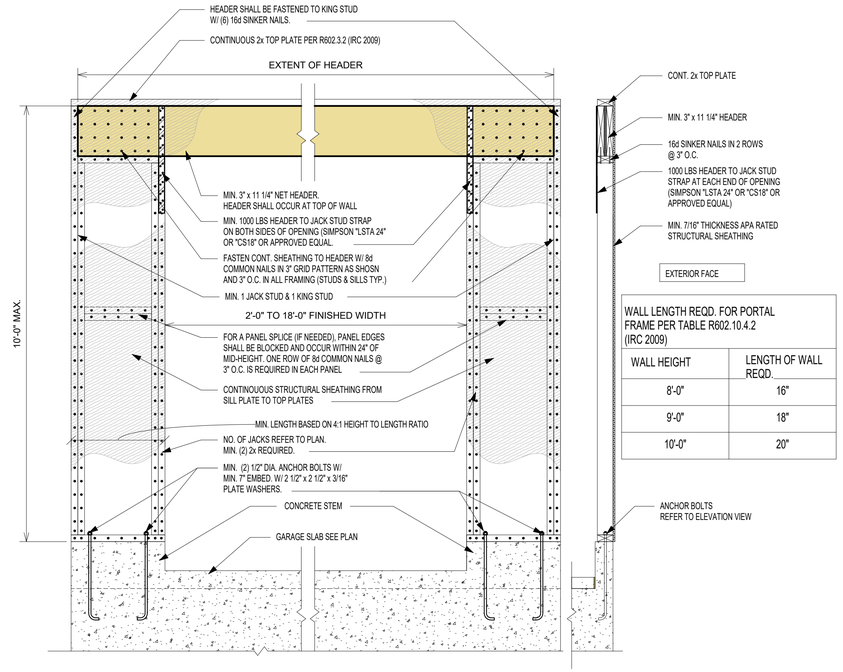

WALL LENGTH REQD. FOR PORTAL FRAME PER TABLE R602.10.4.2 (IRC 2009)

WALL HEIGHT	LENGTH OF WALL REQD.
8'-0"	16"
9'-0"	18"
10'-0"	20"

ELEVATION VIEW

SECTION VIEW

1 / SWB3 PORTAL FRAME @ GARAGE (PFG) LEFT SIDE ONLY
SCALE: 3/4" = 1'-0"

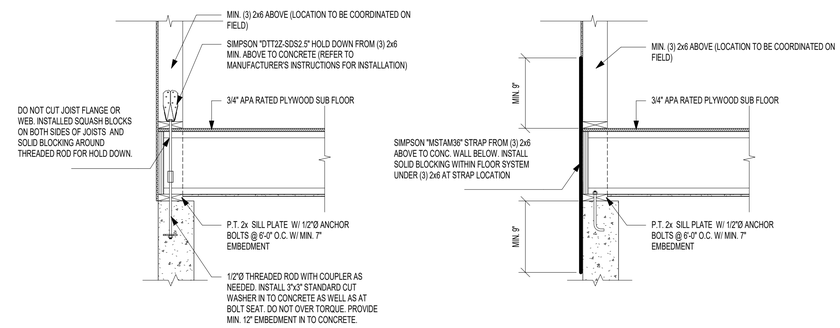

HOLD DOWN OPTION WITH SIMPSON "DTT2Z"

HOLD DOWN OPTION WITH SIMPSON "MSTAM36"

2 / SWB3 TYP. HOLD DOWN DETAILS (APPLY AT CORNERS < 24")
SCALE: 3/4" = 1'-0"

REVIEWED
By Michael Kyne at 2:13 pm, May 23, 2022

APPROVED
Montgomery County
Historic Preservation Commission

© COPYRIGHT 2016
Structural Engineering content of this drawings are property of structBIM LLC and are issued for this project only. Any re-use or re-production of these drawings shall not be done without written consent of structBIM LLC. These drawings are to be read in conjuction with project specifications and drawings from other consultants. These drawings shall not be used as shop drawings. Do not scale drawings, use dimensions as specified.

GTM ARCHITECTS

7735 OLD GEORGETOWN ROAD
SUITE 700
BETHESDA, MD 20814
(240)333-2000
(240)333-2001 FAX
WWW.GTMARCHITECTS.COM

GTM

Seal

STATE OF MARYLAND · KISHAL KANDEL · 40082 · PROFESSIONAL ENGINEER

Consultant

structBIM ENGINEERS
WE DESIGN....WE BIM
46400 BENEDICT DR, SUITE #211
PHONE: 703-657-4481
E-MAIL: info@structBIM.com

Project

21 HIGH STREET, LOT 3
BROOKVILLE, MD 20833

I certify that these documents were prepared or approved by me, and that I am a duly licensed Professional Engineer under the laws of the State of Maryland, license number 40082, Expiration Date: 02-13-2023.

Issue Description	*Date*

structBIM Project No.	21-0245
Checked By	KK
Drawn By	KK
Scale	3/4" = 1'-0"

Sheet Title
WALL BRACING DETAILS & SCHEDULE

Sheet No.

SWB3

COPYRIGHT, 2016 structBIMEngineers, LLC.
PLOTTED ON: 4/19/2022 12:50:22 PM

19 HIGH STREET, LOT 4
BROOKEVILLE, MD 20833

PLAT DATA

LOT 4
ADDITION TO BROOK GROVE
OLNEY 8TH ELECTION DISTRICT
MONTGOMERY COUNTY, MD

TOWN OF BROOKEVILLE
ZONED: HISTORIC VILLAGE RESIDENTIAL

FRONT SETBACK= 15'
SIDE SETBACKS= 8'
REAR SETBACK= 40'

133,830.62 SF (3.072 ACRES)

BUILDING TO BE FULLY SPRINKLERED IN ACCORDANCE WITH 2018 IRC & NFPA13D

GRAPHIC SYMBOLS

- A / A-5 — SECTION SHEET NO.
- A / A-5 — SECTIONAL DETAIL SHEET NO.
- A / A-5 — DETAIL TARGET, ENLARGEMENT SHEET NO.
- N / A-12 — EXTERIOR ELEVATION SHEET NO.
- N / W / 2 / A-12 / E / S — INTERIOR ELEVATION SYMBOL DRAWING NO. SHEET NO.
- ELEV. 42.00 — DATUM ELEVATION
- 106 — ROOM NUMBER
- 4 — DOOR NUMBER
- W1 — WINDOW TYPE
- SF1 / A-6 — STOREFRONT ELEVATION
- 1 — REVISION NUMBER
- P1 — PARTITION TYPES SEE SCHEDULE
- T — TEMPERED GLASS

LIST OF DRAWINGS

001	COVER SHEET
002	SPECIFICATIONS
003	DOOR & WINDOW SCHEDULES
EC001	THERMAL ENVELOPE DIAGRAMS
EC002	THERMAL ENVELOPE DIAGRAMS
EC003	RESCHECK REPORT
SITE	BUILDING SITE PLAN
A100	BASEMENT PLAN
A101	FIRST FLOOR PLAN
A102	SECOND FLOOR PLAN
A103	ATTIC PLAN
A104	ROOF PLAN
A200	FRONT ELEVATION
A201	RIGHT SIDE ELEVATION
A202	REAR ELEVATION
A203	LEFT SIDE ELEVATION
A300	BUILDING SECTION
A301	BUILDING SECTION
A302	BUILDING SECTION
A303	DETAILS
A304	DETAILS
A400	EXTERIOR DETAILS
A401	EXTERIOR DETAILS
A500	DETAILS
A501	DETAILS
A502	DETAILS
A700	GARAGE PLANS
A701	GARAGE ELEVATIONS
A702	GARAGE SECTIONS & TE DIAGRAMS
A703	GARAGE DETAILS
A704	GARAGE RESCHECK REPORT
S0	FOUNDATION PLAN
S1	FIRST FLOOR FRAMING PLAN
S2	SECOND FLOOR FRAMING PLAN
S3	LOFT FLOOR FRAMING PLAN
S4	ROOF FRAMING PLAN
S5	GARAGE FRAMING PLAN
S0	FOUNDATION DETAILS
SD0.1	FOUNDATION DETAILS
SD1	FRAMING DETAILS
SD2	FRAMING DETAILS
SD3	FRAMING DETAILS
SG	GENERAL NOTES
SWB1	FIRST FLOOR WALL BRACING PLAN
SWB2	SECOND FLOOR WALL BRACING PLAN
SWB3	WALL BRACING DETAILS & SCHEDULE

CALCULATIONS

BASEMENT:	
FINISHED:	1,209.3 SF
UNFINISHED:	350.9 SF
TOTAL:	1,560.2 SF
FIRST FLOOR:	1,806.7 SF
FRONT PORCH:	255.4 SF
REAR PORCH:	228.9 SF
SIDE PORCH:	61.5 SF
SECOND FLOOR:	1,612.9 SF
ATTIC:	619.6 SF
DETACHED GARAGE:	576 SF
2ND FLOOR :	406.9 SF
TOTAL GFA:	7,128.1 SF
HOUSE FOOTPRINT:	2,332.9 SF

LOT COVERAGE:

MONTGOMERY COUNTY

LOT= 133,830.62 SF

20% MAX COVERAGE (26,766.12 SF)

2,382.7 SF/ 133,830.62 SF= 1.8%

MATERIAL SYMBOLS

EARTH
CONCRETE
STEEL
BRICK
FINISH WOOD
CONCRETE MASONRY UNIT
ROUGH LUMBER BLOCKING
GYPSUM SHEATHING
SLAT BOARD
ACOUSTICAL TILE

ABBREVIATIONS

ABOVE FINISH FLOOR	AFF	EACH	EA	INTERIOR	INT	PLATE	PL	VERTICAL	VERT
ACOUSTIC	ACST	EAST	E			PLUMBING	PLMB	VESTIBULE	VEST
ADJUSTABLE	ADJ	ELECTRIC, ELECTRICAL	ELEC	JANITOR'S CLOSET	JC	PLYWOOD	PLYWD	VINYL COMPOSITE TILE	VCT
AIR CONDITIONING	A/C	ELEVATION	EL	JOINT	JT	POLYVINYL CHLORIDE	PVC	VOLTS	V
AIR HANDLING	AH	ELEVATOR	ELEV	JOIST	JST	POUND	LB		
AIR HANDLING UNIT	AHU	EMERGENCY POWER	EM	JUNCTION BOX	JB	POUNDS PER SQUARE INCH	PSI	WALLBOARD	WB
ALTERNATE	ALT	EMPTY CONDUIT	EC			PREFABRICATED	PREFAB	WELDED WIRE FABRIC	WWF
ALTERNATE CURRENT	AC	ENGINEER	ENGR	LAMINATED	LAM	PREFINISHED	PREFIN	WIDTH	W
ALUMINUM	AL	ELECTRIC WATER COOLER	EWC	LAVATORY	LAV	PRELIMINARY	PRELIM	WINDOW	WDW
AMPERES	AMP	EXHAUST	EXH	LEFT HAND	LH			WITH	W/
ANCHOR BOLT	AB	EXISTING	EX	LENGTH	L	QUARRY TILE	QT	WITHOUT	W/O
ARCHITECT	ARCH	EXPANSION	EXP	LIBRARY	LIB			WOOD	WD
AT	@	EXPANSION JOINT	EXP JT	LINEAR FEET	LF	RADIUS	RAD, R		
AVERAGE	AVG	EXTERIOR	EXT	LONG LEG HORIZONTAL	LLH	REFRIGERATOR	REF	YARD	YD
				LONG LEG VERTICAL	LLV	REINFORCING	REINF		
BEAM	BM	FAHRENHEIT	F			REQUIRED	REQD		
BOARD	BD	FEET PER MINUTE	FPM	MAINTENANCE	MAINT	RESILIENT	RES		
		FEET, FOOT	FT	MANUFACTURER	MFR	RETURN AIR	RA		
CABINET	CAB	FINISH	FIN	MASONRY	MAS	REVISION	REV		
CATALOG	CAT	FIRE EXTINGUISHER CAB.	FEC	MASONRY OPENING	MO	RIGHT HAND	RH		
CEILING	CLG	FLOOR	FL	MAXIMUM	MAX	ROOM	RM		
CENTERLINE	CL	FLUORESCENT	FLOUR	MECHANICAL	MECH	ROUGH OPENING	RO		
CERAMIC TILE	CT	FIRE RATED	FR	MEDIUM	MED				
CLOSET	CLO			MEZZANINE	MEZZ	SCHEDULE	SCHD		
COLUMN	COL	GAUGE	GA	MINIMUM	MIN	SECTION	SECT		
COMPANY	CO	GALLON	GAL	MISCELLANEOUS	MISC	SERVICE SINK	SS		
CONCRETE	CONC	GALLONS PER MINUTE	GPM	MOUNTED	MTD	SIMILAR	SIM		
CONCRETE MASONRY UNITS	CMU	GALVANIZED	GALV	MULLION	MUL	SOUND TRANSMISSION	STM		
CONFERENCE	CONF	GENERAL CONTRACTOR	GC			SPECIFICATION	SPEC		
CONTINUOUS	CONT	GROUNDED FAULT INTERUPT.	GFI	NOT IN CONTRACT	NIC	SQUARE	SQ		
CONTROL JOINT	C.J	GYPSUM	GYP	NOT TO SCALE	NTS	STANDARD	STD		
COORDINATE	COORD	GYPSUM WALLBOARD	GWB	NUMBER	#, NO	STAND PIPE	ST		
CORRIDOR	CORR					STAINLESS STEEL	SS		
CUBIC FEET	CF	HANDICAPPED	HDCP	OFFICE	OFF	STATION	STA		
CUBIC FEET PER MINUTE	CFM	HARDWARE	HDW	ON CENTER	OC	STEEL	STL		
		HARDWOOD	HDWD	OPENING	OPNG	STORAGE	STOR		
DEDICATED	DED	HEIGHT	HGT, H	OPPOSITE	OPP	STRUCTURAL	STRUCT		
DEPARTMENT	DEPT	HERTZ	HZ	OUNCE	OZ	SUSPENDED CEILING	SUSP		
DEPTH	D	HOLLOW METAL	HM	OVERALL	OA				
DETAIL	DET	HORIZONTAL	HORIZ	OVERHEAD	OH	TELEPHONE	TEL		
DIAGONAL	DIAG	HORSE POWER	HP			THICK OR THICKNESS	THK		
DIAMETER	DIA	HOT WATER HEATER	HWH	PAINTED	PTD	THRESHOLD	THRSLD		
DIMENSION	DIM	HOUR	HR	PANEL	PNL	TILE	T		
DISHWASHER	DW			PARTITION	PTN	TO BE SELECTED	TBS		
DOOR	DR	INCH	IN	PERPENDICULAR	PERP	TONGUE & GROOVE	T & G		
DOWN	DN	INFORMATION	INFO	PERSONAL COMPUTER	PC	TOP	T		
DRAWING	DWG	INSIDE DIAMETER	ID	PHASE	PH	TYPICAL	TYP		
DRINKING FOUNTAIN	DF	INSULATED, INSULATION	INSUL	PLASTIC LAMINATE	P LAM				

PROJECT INFORMATION

CLIENT/CONTRACTOR
PHIL SARDELIS
10776 TUCKER STREET
BELTSVILLE, MD 20705
240-417-5333
philsardelis@gmail.com

ARCHITECT
GTM ARCHITECTS
CONTACT: LUKE OLSON/DOUGLAS ROBERTS
7735 OLD GEORGETOWN ROAD
BETHESDA, MD 20814
(240) 333-2021
(240) 333-2070 FAX
lolson@gtmarchitects.com

CIVIL ENGINEER
CAS ENGINEERING
CONTACT: JARED SIMS CARHART, PD, MSE
10 SOUTH BENTZ STREET
FREDERICK, MD 21701
301-703-2346 (O)
303-217-1152 (C)
jcarhart@casengineering.com

STRUCTURAL ENGINEER
structBIM ENGINEERS
CONTACT: KAUSHAL KANSARA, P.E.
20130 LAKEVIEW CTR. PLZ.
SUITE 400
ASHBURN, VA 20147
(703) 405-9732 (C)
kaushal@structbim.com

PLANS PREPARED BASED ON THE FOLLOWING CODES:
INTERNATIONAL RESIDENTIAL CODE 2018

GTM ARCHITECTS

7735 OLD GEORGETOWN ROAD
SUITE 700
BETHESDA, MD 20814
(240)333-2000
(240)333-2001 FAX
WWW.GTMARCHITECTS.COM

Seal

STATE OF MARYLAND — LUKE M. OLSON — No. 15195 — ARCHITECT

I certify that these documents were prepared or approved by me, and that I am a duly licensed architect under the laws of the State of Maryland, license number 15195. Expiration Date: 12/06/2022

Consultant

Project
19 HIGH ST
LOT 4

Owner

Developer

PERMIT SET	04/11/2022

Issue Description	Date

GTM Project No.	18.0320
Checked By	GTM
Drawn By	LEO/NW
Scale	AS NOTED

Sheet Title

COVER SHEET

Sheet No.

001

COPYRIGHT, 2019 GTM ARCHITECTS, INC.

FILE NAME:

SPECIFICATIONS FOR RESIDENTIAL CONSTRUCTION

The purpose of the following specifications is to establish the level of quality required for both materials and workmanship. These notes are intended as a general outline; specific and additional requirements are indicated on the drawings. Unless noted otherwise in the contract documents, all Products and Materials shall be installed in strict compliance with the manufacturer's recommendations. The contractor should also note that not all of the items mentioned below may apply to the project.

GENERAL REQUIREMENTS

1. All work shall conform to the International Residential Code (IRC), 2018 edition and all applicable sections of the Montgomery County code for single family construction and applicable building codes including (but not limited to) IECC 2018.
2. The General Contractor shall stake off area of new construction and designate trees and shrubs for removal as required. Protect all landscaping beyond the areas of construction.
3. The General Contractor shall coordinate phasing and time limits for new construction with the Owner, so as to establish an acceptable payment schedule related to the status of the project.
4. Any permits required for the project shall be obtained by the General Contractor, unless informed otherwise by the Architect that the permit has been obtained.
5. The General Contractor shall store materials and equipment in a safe and suitable place during the construction process. The Owner is not responsible for any losses of material. The contractor shall be responsible for damage to installed and (or) stored materials until substantial completion or as otherwise noted in the contract document.
6. All debris shall be periodically removed from the site so as to not create a physical or visual hazard to the Owner.
7. The General Contractor shall be licensed in Montgomery County, Maryland, and shall guarantee the project labor and materials for a period of one year after the Architect determines the work to be substantially complete, as per county laws.
8. The General Contractor shall provide competent daily supervision of the project.
9. The General Contractor shall notify the related authorities for inspection of the work as related to the specific areas required by the county.
10. The General Contractor shall Carry Workmen's Compensation Insurance for every person employed by him on the premises and shall maintain such insurance in full force during the entire time of this contract. The General Contractor shall carry Comprehensive General and Automotive Liability Insurance of $25,000 to $50,000 minimum. These requirements can be amended by the Owner if specified by the contract.
11. All drawings, specifications, and copies furnished by the Architect are the documents for the construction of this project only and shall not be used in any other circumstance.
12. The General Contractor shall carefully study the contract documents and report to the Architect any error, omission, or inconsistency they may discover.
13. The General Contractor shall provide and pay for all labor, materials, equipment, tools, machinery and other facilities and services necessary for proper execution and completion of the work, and shall guarantee no mechanic liens against the project at completion.
14. The Contract Sum is stated in the agreement and is the total amount payable by the Owner, which designates the addition, deletion, or revision to the contract. The Change Order must also designate the change in the original contract sum.
15. At least seven days before the date of each progress payment established by the agreement, the General Contractor shall submit to the Architect and Owner an itemized application designating which portion of the work has been completed.
16. The Contractor shall verify dimensions prior to construction, and all discrepancies shall be brought to the attention of the Architect so that clarifications can be made. The Contractor shall field verify all dimensions related to existing conditions. Written dimensions take precedence over scaled sizes. Do not scale drawings to determine missing dimensions.
17. The Contractor shall be responsible to have new utility line services (gas, electric, telephone) installed to the house connection/meter location.

DEMOLITION NOTES

1. Every care shall be taken during demolition to protect the house by means of temporary supports and braces as necessary to prevent any structural failure during removal and replacement of existing structural members.
2. Temporary walls and dust barriers shall be installed as necessary to prevent circulation of dirt and dust into portions of the house that are not part of the work.
3. All dashed walls, fixtures, windows, etc., are to be removed. See Demolition Sheets for additional information.
4. Conduct all demolition operations in compliance with applicable codes and ordinances.
5. Coordinate demolition with work of subcontractors.
6. Maintain the existing structure in a watertight condition at all times.
7. Provide the necessary enclosures to allow the owner to maintain comfortable temperatures within the occupied portions of the home during construction.

GENERAL STRUCTURAL NOTES

1. Work shall be done in accordance with the International Residential Code (IRC), 2018 Edition.
2. The design gravity live loads are as follows:
   - Roof load (snow): 30 LL + 15 DL = 45 PSF
   - Living Spaces: (1st Floor) 40 LL + 15 DL = 55 PSF
   - Sleeping Spaces: (2nd Floor) 30 LL + 15 DL = 45 PSF
   - Exterior Decks: 60 LL + 15 DL = 75 PSF
   - Live Load Deflection Limitation for floors and stairs shall be L/360
   - Live Load Deflection Limitation for roofs shall be L/240

FOUNDATIONS

1. The foundation for the structure has been designed for the assumed bearing pressure of 1,500 PSF. This is to be verified by the contractor prior to the footings being poured. It is also assumed that there is no water condition present.
2. Basement walls have been designed for an assumed equivalent fluid pressure of 55 PSF.
3. Excavations for spread footings and continuous footings shall be cleaned and hand tamped to a uniform surface.
4. Slabs on grade shall be underlaid by a minimum of 4" of granular material having a maximum aggregate size of 1.5 inches and no more than 2% fines. Prior to placing the granular material, the floor subgrade shall be properly compacted, proofrolled, free of standing water, mud, and frozen soil. Before placement of concrete, a (min. 6 mil poly) vapor barrier shall be placed on top of the granular fill and sealed to vertical foundation walls.
5. Bottoms of all exterior footings shall be 2'-6" minimum below finished grade. Footings shall project a minimum of 12" into undisturbed existing natural ground having allowable bearing capacity stated. Depths of footings subject to change if soil conditions are other than assumed.

ENERGY CONSERVATION

1. The following provisions for thermal resistance meet or exceed the requirements stipulated by the 2018 International Energy Conservation Code (IECC), climate zone 4A. These values are the minimum acceptable. See drawings for specific values required for the project.
2. Insulation

		IECC
A.	Ceiling (of uppermost story)	R-49, or R-38 continuous
B.	Vaulted Ceiling sf or 20% of total insulated ceiling area R-30 allowance	R-49 w/lesser of 500
C.	Frame walls (with storm window or double glazing)	R-20 or 13+5 (exterior)
D.	Rim Joists	Equal to wall below
E.	Floors over unheated spaces (including floor overhangs)	R-38
F.	Masonry walls (enclosed heated living areas)	R-13 or R-10 continuous
G.	Slab on grade (heated space) 24" Perimeter Insulation	R-10
H.	Windows	U-0.32 SHGC-0.40
I.	Doors	See section R402.3.4

3. Air Infiltration
   - A. Provide $\frac{1}{4}$" x 5.5" compressible sill sealer between foundation wall and all sill plates. Sill sealer shall be set such that no gaps exist at sealer butt joints.
   - B. Windows: Not exceeding three tenths (0.3) CFM of sash crack
   - C. Sliding glass doors: not exceeding three tenths (0.3) CFM per square foot of door area
   - D. Swinging doors: Not exceeding five tenths (0.5) CFM per square foot of door area. Provide 1" compressible sill sealer between foundation wall and all sill plates.
   - E. Building thermal envelopes shall be tested per IECC R402.4.1.2 and verified as having air leakage not to exceed 3 air changes per hour.
   - F. Recessed lighting in the thermal envelope shall comply with IECC R402.4.5
   - G. Systems duct and piping installation shall comply with IECC R403 including Whole-House Mechanical Ventilation system installation.

TERMITE CONTROL SOIL TREATMENT

1. Treat soil with Bayer Corporation, Premise 75, in strict accordance with manufacturer's recommendations.
2. Remove all extraneous sources of wood cellulose and other edible materials such as wood debris, tree stumps and roots, stakes, formwork, and construction waste wood from soil within and around foundations. Loosen, rake, and level soil to be treated except previously compacted areas under slabs and footings.
   - A. Slabs-on-Grade and Basement Slabs: Under ground-supported slab construction, including footings, building, slabs, and attached slabs as an overall treatment. Treat soil materials before concrete footings and slabs are placed.
   - B. Foundations: Adjacent soil including soil along the entire inside perimeter of foundation walls, along both sides of interior partition walls, around plumbing pipes and electric conduit penetrating the slab, and around interior column footers, piers, and chimney bases; also along the entire outside perimeter, from grade to bottom of footing. Avoid soil washout around footings.
   - C. Crawlspaces: Soil under and adjacent to foundations as previously indicated. Treat adjacent areas including around entrance platform, porches, and equipment bases. Apply overall treatment only where attached concrete platform and porches are on fill or ground.Crawlspaces used as plenum spaces strictly follow manufacturer's recommendedations.
   - D. Along driplines of roof overhangs without gutters.
   - E. Where condensate lines from mechanical equipment drip or drain to soil.
   - F. At plumbing penetrations through ground-supported slabs.
   - G. Other sites and locations as determined by licensed installer.

WARRANTY

Special Warranty: Manufacturer's standard form, signed by Applicator and Contractor certifying that termite control work, consisting of applied termiticide treatment, will prevent infestation of subterranean termites. If subterranean termite activity or damage is discovered during warranty period of five (5) years from Substantial Completion, re-treat soil and repair or replace damage caused by termite infestation.

CONCRETE

1. All concrete construction shall conform to the latest A.C.I. code 332 and shall comply with ACI 117, "Specifications for Tolerances for Concrete Construction and Materials" unless modified by requirements in the Contract Documents.
2. Concrete shall have natural sand fine aggregates and normal weight coarse aggregates conforming to ASTM C33, Type 1 Portland Cement conforming to ASTM 150, and shall have a minimum 28-day compressive strength (F/C) as follows:
   - F/C = 2,500 PSI for footings, interior slabs on grade (except garages) and fill in concrete blocks
   - F/C = 3,000 PSI for foundation walls exposed to weather.
   - F/C = 3,500 PSI for drives, porches, walks, steps, and garage slabs.
   - F/C = 4,000 PSI for precast concrete units.
3. All poured in place concrete exposed to weather conditions, including the garage floor, shall be air entrained by 6% of concrete volume. No calcium chloride or other admixtures shall be used except as approved in writing by the Owner.
4. Slabs on grade: except where otherwise noted, shall be min. 4" thick, reinforced with 6x6 W1.4xW1.4 WWF Lap mesh 6" in each direction. Slab shall be placed on a layer of 6 mil polyethylene, sealed to fdn. walls, over a 4" layer of washed gravel. Refer to drawings for location of thermal insulation.
5. Concrete finish: Exposed exterior steps, stoops and slabs shall first have a steel trowel finish and then a very light broom finish. Exposed interior and garage shall receive a steel trowel finish.
6. Expansion joints: Non-organic, Owner approved, expansion joint material shall be cast in place where slabs abut masonry or concrete walls to prevent bonding between the two materials.
7. Curing: Exposed concrete surfaces shall be sealed with an approved chemical curing compound within one hour of the final troweling. Curing compound label shall state that its use will not interfere with adhesion of subsequent floor finishes.
8. Reinforcing steel: Reinforcing steel for the ties shall be intermediate grade deformed billet steel conforming to ASTM spec. A615-40. All other reinforcing steel shall conform to ASTM spec. A615-60. Welded wire fabric to conform to ASTM A-185. Fabric shall be supplied in flat sheets and lapped to mesh at splices. All reinforcing shall be detailed, fabricated and installed in accordance with the latest detailing manual A.C.I. 315.
9. Reinforcement designated as "continuous" shall lap 36 bar diameters at splices unless noted otherwise.
10. Horizontal footing and walls: reinforcement shall be continuous and shall have 90 degree bends and extensions, or corner bars of equivalent size lapped 36 bar diameters, at corners and intersections.
11. Footings:
   - A. Bottom of footings shall extend a minimum of 2'-6" below any surface subject to freezing: footings shall extend at least 12" into undisturbed soil or set on controlled compacted fill. Depth of footing subject to change if soil conditions are other than assumed. Bearing value of soil is assumed to be 1,500 PSF with no water condition present. Minimum bearing value of controlled fill shall be certified by a licensed geotechnical engineer.
12. Anchor bolts: set anchor bolts or approved straps as shown. Bolts for wood sill plates shall be $\frac{1}{2}$" in diameter and project 8" into concrete; set straps or bolts 12" max from end of any plate and 6'-0" max O.C. spacing, unless shown otherwise.

MASONRY

1. Brick shall conform to ASTM C-62. Mortar shall conform to federal specifications SS-C-18IE-type II. Lay brick only when outside temperature is 45° F and rising. Protect all work from cold and frost and ensure that mortar will cure without freezing. Calcium chloride and antifreeze admixture will not be acceptable.
2. Bearing steel and wood beams shall be supported on solid masonry piers as indicated. Other structural members (lintels, etc.) shall be supported on 8" of solid masonry. All beams and lintels shall have minimum horizontal bearing of 4".
3. Anchor bolts: Set anchor bolts or approved anchor straps as required. Bolts for wood sill plates shall be $\frac{1}{2}$" diameter and project 16" into masonry. Set bolts or straps 12" max. from end of any plate.
4. CMU walls shall have horizontal wire joints reinforcement at 16" O.C. vertically, or as indicated.
5. Provide 4" solid masonry on all sides of joists or beams entering masonry party walls.
6. Brick Veneer:
   - A. Secure brick veneer with 16 GA hot-dipped zinc coated wall ties at 16" O.C. horizontally and vertically.
   - B. Provide flashing at first course above grade, at lintels, sills and elsewhere as shown. Provide $\frac{3}{16}$" diameter tube weeps or cellular plastic head joint-type weeps at 24" O.C.
   - C. Provide through-wall flashing above all unsheltered openings. Flashing shall be end-dammed at all terminations.
   - D. Install high-density polyethylene or polyester cavity drainage material, equal to "mortar net," above all flashing. Material shall be sized to fill the width of the cavity.
7. Stone Veneer:
   - A. Vapor permeable weather-resistive barriers: two-ply asphalt saturated Kraft Grade D breather type sheathing paper.
     - Basis of design is FortifiberΦ / two-ply super jumbo texΦ 60 minute
     - Reference standard; federal specification W-B-790A, Type I, Grade D, Style 2
     - Moisture vapor transmission: 35 grams minimum; ASTM E 96
     - Water resistance: 150 minutes (Professional), ASTM D 779
8. C.M.U.'s to have water repellent block admixture; 'Dry-Block' by W.R. Grace recommended.
9. Exterior mortar to have water repellent admixture.
10. Unless noted otherwise, tool all joints concave.
11. Fully bed in mortar face shells and webs of first course of CMU.
12. All masonry joints shall be fully filled with mortar, including head joints.

ADHERED MASONRY VENNER

1. The adhered Masonry Veneer (AMV) system shall be installed in compliance with IRC R703.12 and ASTM C1780 "Standard Practice for Installation Methods for Cement-based Adhered Masonry Veneer" and The Masonry Veneer Manufacturers Associations (MVMA) "Installation Guide and Detailing Options for Compliance with ASTM C1780". The cladding unit manufacturers installation recommendations are also to be followed.
2. Two separate layers of Water Resistant Barrier (WRM) shall be provided over the sheating substrate.
3. Galvanized lath shall be securely fastened to the wall structure with approved fasteners. A mortar scratch coat shall fully encapsulate the lath and have a scored surface.
4. Cladding units shall be set over a fully cured mortar scratch coat. Cladding units shall be adjusted to comply with the cladding unit manufacturers recommendations and ASTM C1780. Doors and windows shall be adjusted to provide proper operation of opening.
5. Joints shall be filled with "thumb-print hard" adhesive mortar with a slightly concave profile, unless noted otherwise. Prior to joint filling a field mock-up shall be provided for color and workmanship approval.

STEEL

1. Structural steel shall conform to ASTM A36
2. Steel beams shall conform to ASTM A572 Grade 50.
3. All steel angles, lintels, beams, columns, etc. are to be shop primed with red lead or red oxide primer or approved equal. Structural steel at or below grade shall be painted with two coats on an asphaltic base paint and protected with a minimum of 2" solid masonry or concrete.
4. For all openings or recesses in brick or brick-faced masonry walls not specifically detailed, provide one steel angle for each 4" of wall thickness. Provide lintels according to the schedule below:

Lintel	Masonry Opening	Min. Bearing
L 3-1/2 X 3-1/2 X 1/4	Up to 3'-0"	4"
L 3-1/2 X 3-1/2 X 5/16	3'-1" to 4'-0"	6"
L 4 X 3-1/2 X 1/4	4'-1" to 5'-0"	6"
L 4 X 3-1/2 X 5/16	5'-1" to 6'-0"	6"
L 5 X 3-1/2 X 5/16	6'-1" to 7'-0"	8"
L 6 X 4 X 3/8	7'-1" to 8'-0"	8"

Note: For openings greater than 8'-0", consult with Architect and Engineer.

WOOD & CARPENTRY

1. Unless otherwise noted on drawings, all structural wood members shall be #2 Southern Pine or equal, with the following combination of unit stresses:

Extreme fiber stress in bending	1,200 PSI
Compression parallel to the grain	1,000 PSI
Compression perpendicular to the grain	565 PSI
Modulus of Elasticity Shear Stress	1,500,000 PSI

   Installation Tolerance; walls - a maximum out-of-plumb limit of 1/4" in 10' vertically and horizontal in-plane misalignment of 1/8" from adjacent framing shall be achieved. Plates and floors shall be installed within a 1/4" maximum tolerance for straightness relative to the intended location.
2. Manufactured joists and trusses (if shown on drawings) must be designed and certified by a licensed engineer and submitted to the Architect and local building department for approval.
3. Roof rafters and/or trusses shall be connected at each bearing point with one prefab-90 PSI galvanized rafter tie (hurricane clip) by Simpson or approved equal. Similarly, floor joists and trusses shall be connected with one prefabricated joist hanger. Each anchor shall be 18 GA minimum thick.
4. Provide double joists under all parallel partitions, at joists that support headers, and at headers that support joists. Use joist hangers where applicable.
5. All joists and rafters shall be rigidly braced at intervals not exceeding 8'-0".
6. Double studs at header bearing, double joists and rafters at all openings according to schedule below (unless noted otherwise on drawings):
   - Double 2 x 4 Up to 3'-0"
   - Double 2 x 6 Up to 4'-0"
   - Double 2 x 8 Up to 5'-0"
   - Double 2 x 10 Up to 7'-0"
   - Double 2 x 12 Up to 8'-0"

   All double headers and joists shall be joined with a minimum of two rows of 16 d nails 12" on center.
7. Provide blocking, banding, crush blocks, stiffeners, or rim joists, as required, at joist ends.
8. Floor joists shall have a minimum bearing of 2" on framed walls. All beams shall have minimum bearing of 4" bearing on all supports. Provide moisture protection to end of beams pocketed into masonry walls.
9. Wood joists, studs, and beams shall not be cut or notched unless authorized by the Architect. Drilled holes shall be centered at mid-depth of the member and the hole diameter shall not exceed $\frac{1}{3}$ the actual depth of the member. No holes shall be drilled within 2' from the ends or within the middle $\frac{1}{3}$ of the span. Provide 4" clear between holes.
10. Existing conditions shall be verified by the Contractor. Any existing damaged wood members shall be identified and replaced by the Contractor.
11. Contractor shall be responsible for providing necessary bracing and shoring of existing members and walls while altering the structure.
12. Provide 2x4 intermediate blocking at all bearing and non-bearing partitions.
13. All plywood shall be APA span rated. Use exterior grade plywood wherever edge of face will be exposed to weather. Interior plywood exposed to weather during construction shall be Exposure I min.
   - A. Exterior wall sheathing shall be $\frac{1}{2}$" plywood unless noted otherwise.
   - B. Subflooring shall be $\frac{3}{4}$" tongue and groove plywood, glued and screwed to the floor joists as per APA recommendations.
   - C. Where spacing of roof structure members is 16" O.C., roof sheathing shall be $\frac{1}{2}$" plywood ($\frac{3}{4}$" where roofing is slate or tile). Where spacing of roof structure members is 24" O.C., roof sheathing shall be $\frac{5}{8}$" plywood ($\frac{3}{4}$" where roofing is slate or tile). Provide "H" clips at butt joints of roof sheathing.
14. MICRO-LAM L.V.L. (laminated veneer lumber) beams shall be manufactured by Trus Joist MacMillan or approved equal. Beams shall be installed according to manufacturer's recommendations. When fastening two or more beams together, provide a minimum of two rows of 16 d nails 12" on center.
15. TJI Floor Joists are to be manufactured by Trus Joist MacMillan or approved equal. Install per manufacturer's recommendations.
16. The following wood elements are to be pressure treated with preservative, bearing the AWPA standard use category label UC3B or UC4B (for ground contact):
   - A. Sill plates resting on concrete or masonry walls.
   - B. Sill plates resting on concrete slabs on grade.
   - C. Joists which enter concrete or masonry walls and have less than $\frac{1}{2}$" clearance on tops, sides, and ends.
   - D. Sleepers resting directly on concrete slabs.
   - E. Exterior porch and deck framing, decking, and stairs.
17. Fasteners, hangers, and metal accessories used in pressure treated wood construction shall be type 304 or 316 stainless steel. Treated lumber shall not be placed in contact with aluminum flashing or other aluminum components.
18. Exterior Wood Trim:
   - A. All exterior wood trim shall be clear pine or redwood.
   - B. All trim shall be primed on 6 sides (including cut ends) prior to installation.
   - C. All outside corners shall be mitered and no end grain shall be exposed to view. No butt joints will be accepted
19. Exterior Synthetic Trim shall be "AZEK," with traditional smooth surface. Fasteners, joint cement, and installation procedures shall be in accordance with manufacturer's recommendations.
20. Siding: Refer to drawings for type specified.
   - A. Cement board shall be non-asbestos fiber-cement material complying with ASTM Standard Specification C1186 Grade II, Type A. Materials shall be equal to those manufactured by James Hardie Building Products.
   - B. Wood siding and sidewall Shingles shall be kiln dried Western Red Cedar, "Clear V.G. Heart" grade for clear and transparent stain finishes, and "A Clear" grade for semi-transparent stain or opaque finishes. Semi-transparent stain or opaque finish shall be applied in strict accordance to manufacturer's recommendations; including, but not limited to, substrate preparation and primer/sealer application to all wood surfaces (6-sides). Fasteners shall generally be type 304 stainless steel, but shall be type 316 for coastal applications. Install wood siding and shingle products over "Cedar Breather" by Benjamin Obdyke Inc. and 30# felts in accordance with manufacturer's instructions. Siding installation and finishing shall be as recommended by the Western Red Cedar Lumber Association. Siding shall be sealed prior to installation, fasteners shall be concealed where possible or arranged in a uniform pattern.
21. Coordinate all floor and wall framing with ductwork. Refer to mechanical notes.
22. Folding Attic Access Ladder shall be 22$\frac{1}{2}$" x 44" with self-trimming flange, pre-finished door panel, and gas-piston counterbalance. The door panel shall have continuous integral weatherstripping, R-10 insulation, and two key operated locking pins to draw the door tight. Ladder steps shall be pine, doweled to pine stringers. Contact Resource Conservation Technology at 410-366-1146. Additional insulation hood shall be provided to meet required insulation value per IECC R402.2.4.

DOORS AND WINDOWS

1. AWI "Custom Standard" shall apply to the workmanship, installation and finishing of wood doors and windows components.
2. The tops, bottoms, and edges of all doors shall be finished.
3. Any defects that prevent the door or window from serving its intented purpose satisfactorily shall be rejected, such as material that is crooked, warped, bowed, chatter marked, plane or tool marked, chipped, or otherwise defective.
4. Doors and windows shall be adjusted to provide proper operation of opening.

RADON DETECTION AND TREATMENT

1. The Contractor shall provide a venting system consisting of a minimum of 3" diameter ABS, PVC or equivalent gas-tight plumbing pipe inserted into the sub-slab gravel base (at all new concrete slabs). A 'T' fitting or equivalent method shall be used to ensure that the pipe opening remains with the sub-slab permeable material. The pipe shall terminate at least 12" above the high side of the roof penetration. Contractor shall coordinate location of pipe with Architect prior to installing the pipe.
2. Install, per IRC, 2018 edition, Appendix F 'Radon Control Methods.'
3. The Contractor shall provide any other measures as required by local codes.

VENTILATION

1. Where attics are indicated to be ventilated, they are to be vented in one of the following ways (refer to drawings for specifics):
   - A. Continuous ridge venting and continuous soffit venting. Ridge vent shall be by Cor-A-Vent or approved equal. Continuous screen soffit vents shall be a minimum of 2" wide. Circular louver vents between each rafter may be used at the soffit if shown on the drawings.
   - B. Screen louvers or vents with an open area equal to one square foot for every 300 square feet of attic space.
2. Provide foundation vents for all crawl spaces. Refer to drawings for locations.
3. Venting for appliances and exhaust fans:
   - A. Provide venting to the exterior as per manufacturer's recommendations for all appliances. Location of ductwork and vent on exterior shall be approved by Architect prior to installation.
   - B. Provide exhaust fans for bathrooms, etc., as shown on drawings. Location of ductwork and vent on exterior shall be approved by Architect prior to installation. Ducts within unconditioned spaces shall be insulated to prevent condensation.
4. Provide Whole-House ventilation system to comply with IECC R403.4

MOISTURE PROTECTION

1. Appropriate sealants shall be selected for each substrate depending upon location (interior or exterior), humidity, moisture conditions, and traffic conditions. Use primers as required.
2. Color of caulking shall be coordinated with adjacent materials and must be approved by Architect prior to application.
3. Joint fillers shall be used:
   - A. To control the depth of sealants in joints.
   - B. To meet the requirements for resilient separations in horizontal joints in floor, pavements, patios, sidewalks, and other light traffic areas.
4. Bond breakers shall be used to prevent adhesion to more than two surfaces.
5. Masonry foundations shall be parged to a thickness of $\frac{3}{4}$" minimum.
6. Waterproof all below grade foundation walls with a polymer-modified asphalt emulsion similar to TREMCO "TUFF-N-DRI Classic". Dry/ cured membrane thickness shall be minimum 40 mil. Installation and substrate preparation shall be per manufacturer's recommendations. Install subsurface drainage composite similar to CETCO "Aquadrain 10X" over the cured membrane with asphalt emulsion adhesive similar to Henry 111 Insulbond.
7. Footing drains shall be min. 4" in diameter and installed on the exterior of all foundations.
8. All flashing shall be installed according to the building code. An eave flashing strip of 40 mil. self-adhering rubberized asphalt sheet membrane shall be applied to extend from the edge of the roof to a point 24" min. inside the interior wall line of the structure, and at all valleys.
9. All membrane roofing to be approved by Architect prior to installation.
10. All roof shingles to be approved by Architect prior to installation.
11. Asphalt shingle roofs with slopes from 2 in 12 to 4 in 12 shall have two layers of #15 roofing felt applied in accordance with with the International Residential Code.
12. Flashing"
   - A. Through-wall and other concealed flashing shall be a composite of fiberglass fabric, 5 oz. copper and asphalt, equal to York Copper Fabric.
   - B. Exposed flashing shall be 16 oz. copper.
13. Painted aluminum drip strips shall be installed at the eave and rake edges of the roof sheathing for shingle roofs, and above window and door trim where indicated.
14. Exterior Insulation and Finish Systems (EIFS) shall be equal to Dryvit, Residential MD System, with Dryvit drainage mat installed between the secondary weather barrier and the insulation board.
15. Cedar roof shingles shall be No. 1, Blue Label, red cedar. Install over "Cedar Breather" by Benjamin Obdyke Inc. and 30# felts in accordance with manufacturer's instructions.
16. Standing seam roofing shall be 16 ounce copper with water-tight standing seams. For slopes greater than 3 in 12 provide #30 roofing felt underlayment on solid sheathing. For slopes 3 in 12 or less provide self-adhering 40 mil ice and water guard membrane over the entire area to receive standing seam roofing.

FINISHES

Gypsum Wallboard:

1. Gypsum wallboard shall be ASTM C-36 as follows:
   - A. Regular ($\frac{1}{2}$"): except where noted.
   - B. Water resistant ($\frac{1}{2}$"): at bathroom ceilings and walls that are not tiled.
   - C. Durock interior tile backer board ($\frac{1}{2}$"): at all surfaces that have tile.
2. Gypsum boards shall have tapered edges to accommodate joint reinforcement.
3. Provide edge corner beads, trim, taping, and joint compounds as required for the proper completion of the job. Materials shall be by U.S. Gypsum or approved equal.
4. Finishing requirements:
   - A. For typical walls and ceilings provide a Level 4 Finish as defined by the Gypsum Association.
   - B. For surfaces noted to receive semi-gloss or gloss paint provide a Level 5 Finish as defined by the Gypsum Association.

Hardwood Flooring:

1. Unless noted otherwise, provide wood strip flooring where shown on the drawings.
2. Wood strip flooring to be oak. Where abutting existing floor, new floor shall match existing in size and grain. Elsewhere, oak shall be "clear" grade, in accordance with the national Oak Flooring Manufacturer's Association.
3. Install flooring in strict accordance with the recommendation of the National Oak Flooring Manufacturer's Association.
4. After the floors have been sanded, the flooring contractor shall apply a minimum of four stain and urethane samples in two foot by two foot areas on the floor for the owner to review. The owner shall have a minimum of two days to make a selection.

Ceramic Tile:

1. Provide ceramic tile and accessories in accordance with the Tile Council of American Specifications 137.1, in colors and patterns to be specified by the owner.
2. Setting materials: comply with pertinent recommendations contained in the Tile Council of America "Handbook for Ceramic Tile Installation."
3. Installation: comply with ANSI A108.1, ANSI A108.2, and the "Handbook for Ceramic Tile Installation" of the Tile Council of America.
   - A. Extend tile into recesses and under equipment and fixtures to form a complete covering without interruptions.
   - B. Terminate tile neatly at obstruction, edges, and corners, without disruption of pattern or joint alignment.
   - C. Align joints when adjoining tiles on floor, base, trim, and walls are the same size.
   - D. Layout tile work and center the tile fields in both directions in each space or on each wall area.
4. Replacement reserve: Contractor shall furnish to the Owner one unopened box of additional tiles for future repairs and maintenance work.

Carpet:

1. Provide carpeting as indicated on the drawings. Refer to allowances on schedule sheet.

Vinyl Tile:

1. Installation of all vinyl composition tile (VCT) shall be done in a manner which conforms with:
   - ASTM E 648,
   - ASTM E 84, AND
   - ASTM E 662.
2. Replacement reserve: Contractor shall furnish Owner with one unopened box of additional tile for future repairs and maintenance.

Paint:

1. All paint and primers to be Benjamin Moore or approved equal. Refer to schedule for colors and types.
2. All surfaces to be painted shall receive one primer coat and two finish coats.
3. All paint shall be applied according to manufacturer's recommendations.

Architectural Woodwork and Trim:

1. All millwork trim and molding shall be installed accordingly to the quality of standards of the Architectural Woodwork Institute (AWI).
2. All interior trim and millwork shall conform to AWI "custom standards."
3. Flat trim shall be clear pine or approved equal.
4. All corners of trim and siding are to be mitered, except inside corners of interior running trim which shall be coped. Exposed end grains will not be accepted.
5. All millwork and trim shall be installed by craftsmen with experience in work of this type. All work shall be first class in every regard and consistent with the best practices of the trade.

FIRE AND LIFE SAFETY

1. Stairs:
   - A. 7$\frac{3}{4}$" max rise
   - B. 10" min tread
   - C. 6'-8" min head room
   - D. Height of handrails shall be continuous, 34" (min) to 38" (max) above finished stair treads. Handrails required at stairs with 3 or more risers.
   - E. Guardrails shall be 36" (min) to 42" (max) above finished floor.
2. Provide a clear window opening of 5.7 square feet with no less than 20" clear wide and 24" clear high for sleeping area. The sill of this windows shall be no more than 44" above the finished floor.
3. Provide safety glass in all exterior doors, storm doors, sliding glass doors, shower doors, and tub enclosures above and adjacent to spas and tubs and where the glass is closer than 18" to the floor and exceeds 9 square feet in area.
4. Ground metal siding.
5. Smoke detectors shall be provided on every floor, in each bedroom and in each hall outside of bedrooms, and integrated with the electrical system with battery backup.
6. If a fuel-burning appliance, fireplace, or attached garage is present, an interconnected battery back up carbon monoxide alarm or detector must be installed outside all sleeping areas and on all floors. If fuel-buring appliance or fireplace is present in any sleeping area, an interconnected carbon monoxide alarm or detector must also be installed in that room as required per local jurisdiction.
7. Flues shall be class B except solid fuel flues, which shall be class A.
8. Top of flue shall be 2'-0" above any part of structure within 10'-0" of flue.
9. Interior finish of walls and ceiling shall have a flame spread rating not greater than Class III.
10. Carpeting shall meet federal regulation DOC FF-1.
11. Prefab fireplaces shall be (U.L.) rated and installed according to manufacturer's specifications.
12. Provide outside air for combustion in all prefab and masonry fireplaces.

ELECTRICAL AND LIGHTING NOTES

1. Electrical contractor shall size and arrange all circuits in accordance with the National Electric Code as well as all local codes. Service to be upgraded as required.
2. Wall outlets are to be mounted 1'-6" above finished floor unless noted otherwise.
3. Switches are to be mounted 4'-0" above finished floor unless noted otherwise.
4. Mounting heights are to the vertical center of the equipment to the finished elevation of the floor.
5. All new switch and outlet styles are to be approved by Owner prior to installation.
6. Provide hardwired smoke detectors on all floors, located as per Montgomery County Code.
7. Electrician shall locate all fixtures, switches, outlets, etc. prior to running wiring. Owner, Architect, and Electrician to meet at a mutually agreed upon time to review locations. The purpose of which is to allow for possible relocation prior to wiring.
8. Owner is allowed to add an additional ten (10) items (switches, cable, phone, outlet, etc., or any combination) at no additional charge to the owner.
9. Contractor shall determine, based on an on-site review of existing and proposed electrical systems, whether an electrical service heavy-up will be required, and shall include the costs of all required upgrades in their Contract Amount.
10. Provide door bell, transformer, and chime for front door and where indicated. In lieu of Owner's selection otherwise, price shall be based on the following: Illuminated Button - Destination Lighting product number 15921; Transformer - 16V; Chimes - Teiber Model CTSB-or STPW-, in Owner's choice of finish. Verify all selections and mounting locations with Owner prior to purchasing.
11. Per IECC R404.1 90% of installed lighting fixtures must contain high efficacy lamps.

MECHANICAL NOTES

1. All work shall be done in accordance with the International Residential Code (IRC), 2018 Edition, as well as IECC 2018 and other local codes including a compliant Manual J load calculation/ design in accordance with ACCA recommendations.
2. Unless otherwise indicated in Contract Documents, Contractor shall be delegated to design a fully functional and performing mechanical system in accordance with applicable mechanical codes and standards. Contractor shall submit all duct layouts and air handler locations (and thermostat locations) to the Owner and the Architect for approval prior to the commencement of framing. No extras will be given for any modification required to the framing due to ductwork.
3. All exterior unit locations to be coordinated with Owner and Architect.
4. Air conditioners shall be Energy Star rated and shall have a minimum 13 SEER rating with two zones each. Gas furnaces shall have a minimum Annual Fuel Utilization Efficiency rating of 90%.
5. Equipment will be Carrier or approved equal.
6. Ductwork will be galvanized sheet metal and flex.
7. Registers and return grilles are Hart & Cooley or equal.

PLUMBING NOTES

1. All work shall be done in accordance with the International Residential Code (IRC), 2018 Edition, as well as IECC 2018 and other local codes.
2. Contractor shall provide riser diagrams as required for permit, and shall submit to the Architect proposed locations of all waste and supply lines prior to the commencement of framing. No extras will be given for any modification required to the framing due to plumbing lines. Provide cast iron at vertical waste lines.
3. Unless otherwise indicated in Contract Documents. Contractor shall be delegated to design a fully functional and performing water supply and waste system in accordance with applicable plumbing codes and standards. Install water heater and reserve tank per requirements of the house with recirculate system.
4. Provide drain pans under all water heaters and washing machines, and pipe the pan to the sanitary drain upstream of a trap.
5. Contractor shall make a count of existing and proposed fixtures to determine whether a water or sewer upgrade will be required, and shall include the costs of all required upgrades in his Contract Amount. The count of existing fixtures shall be based on an on-site inspection.
6. Provide cast iron at vertical waste lines.
7. Locate plumbing clean out plugs in bottom $\frac{1}{3}$" of wall, typical.

STEAM SHOWER

1. Wall construction: Provide ceramic tile over dryset or latex Portland cement mortar bond coat over tile backer board over Dow insulation board over 2x4 studs.
2. Ceiling construction: Same as walls, provide continuous sloped ceiling ($\frac{1}{2}$" per foot), and provide rounded inside corner tile at joint between wall and ceiling.
3. Insulate all walls, ceiling, and floor adjacent to steam shower.
4. Steam shower to be watertight, including a watertight shower door.
5. Steam Unit: "Mr. Steam model #MS-150, 6kw or approved equal. Provide the following connections: water inlet $\frac{3}{8}$" NPT, steam outlet NPT, drain $\frac{3}{8}$" NPT. Follow all manufacturer's specifications.

ROOFTOP-MOUNTED PHOTOVOLTAIC SYSTEMS

1. Structural support for all rooftop-mounted photovoltaic systems and other considerations shall comply with 2018 IRC Section R324.4

STATIONARY STORAGE BATTERY SYSTEMS

1. The installation of battery storage systems shall comply with 2018 IRC Section R327

FILE NAME:

GTM ARCHITECTS

7735 OLD GEORGETOWN ROAD
SUITE 700
BETHESDA, MD 20814
(240)333-2000
(240)333-2001 FAX
WWW.GTMARCHITECTS.COM

GTM

Seal

I certify that these documents were prepared or approved by me, and that I am a duly licensed architect under the laws of the State of Maryland, license number 8385, Expiration Date: 12-06-2022.

Consultant

Project
19 HIGH ST
LOT 4

Owner

Developer

Issue Description	Date
PERMIT SET	04/11/2022

GTM Project No.	18.0320
Checked By	GTM
Drawn By	LEO/NW
Scale	AS NOTED

Sheet Title

SPECIFICATIONS

Sheet No.

002

COPYRIGHT, 2019 GTM ARCHITECTS, INC.

DOOR SCHEDULE

DOOR				FRAME					HARDWARE	REMARKS
NO.	SIZE	MATERIAL	MANUF.	MAT:	FIN:	HEAD	JAMB	SILL		
BASEMENT										
1	2^{6} x 6^{8}	TEMPERED GLASS	T.B.D						H-2	
2	2^{6} x 6^{8}	SOLID CORE MASONITE	T.B.D						H-2	
3	2^{6} x 6^{8}	SOLID CORE MASONITE	T.B.D.						H-3	
4	1 PAIR 2^{6} x 6^{8}	SOLID CORE MASONITE	T.B.D						H-5	
5	2^{4} x 6^{8}	SOLID CORE MASONITE	T.B.D.						H-5	
6	2^{4} x 6^{8}	SOLID CORE MASONITE	T.B.D.						H-5	
7	2^{6} x 6^{8}	SOLID CORE MASONITE	T.B.D.						H-4	
FIRST FLOOR										
8	3^{0} x 8^{0}	WOOD & GLASS	T.B.D						H-2	PAINT GRADE W/ 18" TEMPERED SIDELIGHTS
9	1 PAIR 1^{6} x 8^{0}	SOLID CORE MASONITE	T.B.D.						H-5	
10	2^{4} x 8^{0}	SOLID CORE MASONITE	T.B.D.						H-3	
11	2^{4} x 8^{0}	SOLID CORE MASONITE	T.B.D.						H-4	
12	2^{6} x 8^{0}	SOLID CORE MASONITE	T.B.D						H-4	
13	1 PAIR 2^{4} x 8^{0}	SOLID CORE MASONITE	T.B.D.						H-5	
14	2^{8} x 8^{0}	WOOD & GLASS	T.B.D.						H-2	
15	3^{0} x 8^{0}	WOOD & GLASS	T.B.D.						H-2	
16	15^{10} x 8^{0}	WOOD & GLASS	T.B.D.						H-2	
SECOND FLOOR										
17	2^{6} x 7^{0}	SOLID CORE MASONITE	T.B.D						H-3	
18	1 PAIR 1^{6} x 7^{0}	SOLID CORE MASONITE	T.B.D.						H-5	
19	2^{4} x 7^{0}	TEMPERED GLASS	T.B.D.						-	TEMPERED GLASS SHOWER DOOR
20	2^{4} x 7^{0}	SOLID CORE MASONITE	T.B.D.						H-3	
21	2^{4} x 7^{0}	SOLID CORE MASONITE	T.B.D						H-4	
22	2^{4} x 7^{0}	SOLID CORE MASONITE	T.B.D.						H-4	
23	2^{8} x 7^{0}	SOLID CORE MASONITE	T.B.D						H-4	
24	2^{6} x 7^{0}	SOLID CORE MASONITE	T.B.D.						H-3	
25	1 PAIR 2^{0} x 7^{0}	SOLID CORE MASONITE	T.B.D.						H-5	
26	2^{4} x 7^{0}	SOLID CORE MASONITE	T.B.D						H-3	
27	1^{6} x 7^{0}	SOLID CORE MASONITE	T.B.D.						H-5	
28	2^{6} x 7^{0}	SOLID CORE MASONITE	T.B.D.						H-3	
29	1 PAIR 2^{0} x 7^{0}	SOLID CORE MASONITE	T.B.D						H-5	
30	2^{4} x 7^{0}	SOLID CORE MASONITE	T.B.D						H-3	
31	2^{4} x 7^{0}	SOLID CORE MASONITE	T.B.D						H-3	
32	2^{6} x 7^{0}	SOLID CORE MASONITE	T.B.D						H-3	
33	1 PAIR 2^{0} x 7^{0}	SOLID CORE MASONITE	T.B.D						H-5	
34	2^{8} x 7^{0}	SOLID CORE MASONITE	T.B.D						H-3	
THIRD FLOOR										
35	2^{6} x 6^{8}	SOLID CORE MASONITE	T.B.D						H-4	
36	2^{6} x 6^{8}	SOLID CORE MASONITE	T.B.D						H-4	
37	2^{6} x 6^{8}	SOLID CORE MASONITE	T.B.D						H-3	
38	2^{0} x 6^{8}	TEMPERED GLASS	T.B.D.						-	TEMPERED GLASS SHOWER DOOR
39	1 PAIR 2^{0} x 6^{8}	SOLID CORE MASONITE	T.B.D.						H-5	

HARDWARE SCHEDULE

NOTE: ALL HARDWARE TO BE BY SCHLAGE OR APPROVED EQUAL. (EXCEPT FRENCH DOORS, WHICH ARE TO HAVE STANDARD HARDWARE BY DOOR MANUF.)

H-1	DOUBLE CYLINDER ENTRANCE LOCK, DEADBOLT
H-2	MULTI-POINT LEVER SET BY WINDOW/DOOR MANUF.
H-3	BATH/BEDROOM PRIVACY LOCK
H-4	PASSAGE SET
H-5	BALL CATCHES $ DUMMY KNOBS
H-6	POCKET DOOR HARDWARE
H-7	FRENCH DOOR PRIVACY LOCK-FLUSH BOLT/DUMMY HANDSET COMBO

GENERAL DOOR NOTES:

1. CONFIRM HARDWARE SELECTION WITH OWNER PRIOR TO ORDERING.
2. INTERIOR DOORS TO BE SOLID CORE.
3. DOORS W/ SIDELITES SHALL HAVE 2-2x6 SPACERS BETWEEN UNLESS SHOWN OTHERWISE
4. PROVIDE SAFETY GLASS AT ALL EXTERIOR FRENCH DOORS, PER CODE
5. PROVIDE CHARCOAL SCREENING @ SCREEN DOORS
6. CONNECT GARAGE DOOR TO ALARM SYSTEM PER OWNER

GENERAL NOTES

1. ALL WINDOWS TO HAVE SCREENS (SCREEN FRAMES COLOR T.B.S.).
2. ALL WINDOWS TO BE ALUMINUM CLAD EXTERIOR, PRE-PRIMED INTERIOR.
3. CONFIRM HARDWARE FINISH W/ ARCHITECT & OWNER PRIOR TO ORDER.
4. ALL GLAZING TO BE DOUBLE PANED, LOW E, CLEAR INSULATED.
5. CONFIRM OVERALL WINDOW SCHEDULE W/ ARCHITECT PRIOR TO ORDER.
6. ALL WINDOWS & GLASS DOORS TO BE SIMULATED DIVIDED LITE, 7/8" MUNTIN.. SEE ELEVATIONS FOR MUNTIN CONFIGURATIONS
7. PROVIDE WHITE JAMB LINERS.
8. ALL EXTERIOR TRIM FOR FRAME WALL UNITS TO BE AZEK PROVIDED & INSTALLED BY G.C.
9. GANGED WINDOWS SHALL 3-2x4 SPACERS BETWEEN UNLESS SHOWN OTHERWISE
10. PROVIDE EGRESS HARDWARE IN EGRESS WINDOWS AS REQUIRED.
11. SEE ELEVATIONS FOR TYPICAL HEAD HEIGHTS ABOVE FINISHED SUBFLOOR
12. PROVIDE SAFETY GLASS AT ENTRIES, STAIRS, OVER BATHTUBS & ELSEWHERE AS REQUIRED BY CODE.

DOOR SCHEDULE, CONT'D.

DETACHED GARAGE										
40	2^{8} x 8^{0}	WOOD & GLASS	T.B.D						H-2	
41	2^{6} x 8^{0}	WOOD & GLASS	T.B.D						H-2	
42	1 PAIR 2^{0} x 8^{0}	THERMA TRU	T.B.D						H-2	
43	8^{2} x 8^{0}	WOOD & GLASS	ARTISAN OR EQ.						PER. MANUF.	
44	8^{2} x 8^{0}	WOOD & GLASS	ARTISAN OR EQ.						PER. MANUF.	
45	2^{4} x 6^{8}	SOLID CORE MASONITE							H-3	
46	1 PAIR 2^{0} x 6^{8}	SOLID CORE MASONITE							H-5	
47	2^{4} x 6^{8}	SOLID CORE MASONITE							H-4	

WINDOW SCHEDULE (DETACHED GARAGE)

400	CASEMENT	JELDWEN SITELINE	SCC3048	30 3/4"x 48 3/4"	INSULATED	SEE ELEVS. FOR GRILLE PATTERN	
401	DOUBLE HUNG	JELDWEN SITELINE	SCD3148	32 1/8"x 48 3/4"	INSULATED	SEE ELEVS. FOR GRILLE PATTERN	
402	CASEMENT	JELDWEN SITELINE	SCC3048	30 3/4"x 48 3/4"	INSULATED	SEE ELEVS. FOR GRILLE PATTERN	
403	CASEMENT	JELDWEN SITELINE	SCC3248	32 3/4"x 48 3/4"	INSULATED	SEE ELEVS. FOR GRILLE PATTERN	
404	DOUBLE HUNG	JELDWEN SITELINE	SCD3364	34 1/8"x 64 3/4"	INSULATED	SEE ELEVS. FOR GRILLE PATTERN	
405	CASEMENT	JELDWEN SITELINE	SCC3048	30 3/4"x 48 3/4"	INSULATED	SEE ELEVS. FOR GRILLE PATTERN	
406	CASEMENT	JELDWEN SITELINE	SCC3048	30 3/4"x 48 3/4"	INSULATED	SEE ELEVS. FOR GRILLE PATTERN	
407	CASEMENT	JELDWEN SITELINE	SCC3248	32 3/4"x 48 3/4"	INSULATED	SEE ELEVS. FOR GRILLE PATTERN	
408	DOUBLE HUNG	JELDWEN SITELINE	SCD3364	34 1/8"x 64 3/4"	INSULATED	SEE ELEVS. FOR GRILLE PATTERN	
409	DOUBLE HUNG	JELDWEN SITELINE	SCD3364	34 1/8"x 64 3/4"	INSULATED	SEE ELEVS. FOR GRILLE PATTERN	

WINDOW SCHEDULE (BASEMENT)

#	TYPE	MANUFACTURER	CAT. NO.	ROUGH OPNG.	GLASS	REMARKS	
001	DOUBLE HUNG	JELDWEN SITELINE	SCD3760	38 1/8" x 60 3/4"	INSULATED	SEE ELEVS. FOR GRILLE PATTERN	TEMPERED UNIT

WINDOW SCHEDULE (FIRST FLOOR)

100	DOUBLE HUNG	JELDWEN SITELINE	SCD3364	34 1/8" x 64 3/4"	INSULATED	SEE ELEVS. FOR GRILLE PATTERN	
101	DOUBLE HUNG	JELDWEN SITELINE	SCD3372	34 1/8" x 72 3/4"	INSULATED	SEE ELEVS. FOR GRILLE PATTERN	
102	DOUBLE HUNG	JELDWEN SITELINE	SCD3372	34 1/8" x 72 3/4"	INSULATED	SEE ELEVS. FOR GRILLE PATTERN	
103	DOUBLE HUNG	JELDWEN SITELINE	SCD3372	34 1/8" x 72 3/4"	INSULATED	SEE ELEVS. FOR GRILLE PATTERN	
104	DOUBLE HUNG	JELDWEN SITELINE	SCD3772	38 1/8" x 72 3/4"	INSULATED	SEE ELEVS. FOR GRILLE PATTERN	
105	DOUBLE HUNG	JELDWEN SITELINE	SCD3772	38 1/8" x 72 3/4"	INSULATED	SEE ELEVS. FOR GRILLE PATTERN	
106	DOUBLE HUNG	JELDWEN SITELINE	SCD3372	34 1/8" x 72 3/4"	INSULATED	SEE ELEVS. FOR GRILLE PATTERN	
107	DOUBLE HUNG	JELDWEN SITELINE	SCD3372	34 1/8" x 72 3/4"	INSULATED	SEE ELEVS. FOR GRILLE PATTERN	
108	DOUBLE HUNG	JELDWEN SITELINE	SCD3372	34 1/8" x 72 3/4"	INSULATED	SEE ELEVS. FOR GRILLE PATTERN	
109	DOUBLE HUNG	JELDWEN SITELINE	SCD3364	34 1/8" x 64 3/4"	INSULATED	SEE ELEVS. FOR GRILLE PATTERN	
110	DOUBLE HUNG	JELDWEN SITELINE	SCD3364	34 1/8" x 64 3/4"	INSULATED	SEE ELEVS. FOR GRILLE PATTERN	
111	DOUBLE HUNG	JELDWEN SITELINE	SCD3772	38 1/8" x 72 3/4"	INSULATED	SEE ELEVS. FOR GRILLE PATTERN	
112	DOUBLE HUNG	JELDWEN SITELINE	SCD3772	38 1/8" x 72 3/4"	INSULATED	SEE ELEVS. FOR GRILLE PATTERN	
113	DOUBLE HUNG	JELDWEN SITELINE	SCD3772	38 1/8" x 72 3/4"	INSULATED	SEE ELEVS. FOR GRILLE PATTERN	
114	CASEMENT	JELDWEN SITELINE	SCC3248	32 3/4" x 48 3/4"	INSULATED	SEE ELEVS. FOR GRILLE PATTERN	
115	CASEMENT	JELDWEN SITELINE	SCC3248	32 3/4" x 48 3/4"	INSULATED	SEE ELEVS. FOR GRILLE PATTERN	
116	DOUBLE HUNG	JELDWEN SITELINE	SCD3772	38 1/8" x 72 3/4"	INSULATED	SEE ELEVS. FOR GRILLE PATTERN	
117	DOUBLE HUNG	JELDWEN SITELINE	SCD3772	38 1/8" x 72 3/4"	INSULATED	SEE ELEVS. FOR GRILLE PATTERN	

WINDOW SCHEDULE (SECOND FLOOR)

200	DOUBLE HUNG	JELDWEN SITELINE	SCD3364	34 1/8" x 64 3/4"	INSULATED	SEE ELEVS. FOR GRILLE PATTERN	EGRESS UNIT
201	DOUBLE HUNG	JELDWEN SITELINE	SCD3364	34 1/8" x 64 3/4"	INSULATED	SEE ELEVS. FOR GRILLE PATTERN	EGRESS UNIT
202	DOUBLE HUNG	JELDWEN SITELINE	SCD3760	38 1/8" x 60 3/4"	INSULATED	SEE ELEVS. FOR GRILLE PATTERN	EGRESS UNIT
203	DOUBLE HUNG	JELDWEN SITELINE	SCD3760	38 1/8" x 60 3/4"	INSULATED	SEE ELEVS. FOR GRILLE PATTERN	EGRESS UNIT
204	DOUBLE HUNG	JELDWEN SITELINE	SCD3760	38 1/8" x 60 3/4"	INSULATED	SEE ELEVS. FOR GRILLE PATTERN	EGRESS UNIT
205	AWNING	JELDWEN SITELINE	SCA3230	32 3/4" x 30 3/4"	INSULATED	SEE ELEVS. FOR GRILLE PATTERN	
206	AWNING	JELDWEN SITELINE	SCA3230	32 3/4" x 30 3/4"	INSULATED	SEE ELEVS. FOR GRILLE PATTERN	
207	AWNING	JELDWEN SITELINE	SCA3230	32 3/4" x 30 3/4"	INSULATED	SEE ELEVS. FOR GRILLE PATTERN	
208	AWNING	JELDWEN SITELINE	SCA3230	32 3/4" x 30 3/4"	INSULATED	SEE ELEVS. FOR GRILLE PATTERN	
209	DOUBLE HUNG	JELDWEN SITELINE	SCD3760	38 1/8" x 60 3/4"	INSULATED	SEE ELEVS. FOR GRILLE PATTERN	
210	DOUBLE HUNG	JELDWEN SITELINE	SCD3760	38 1/8" x 60 3/4"	INSULATED	SEE ELEVS. FOR GRILLE PATTERN	
211	DOUBLE HUNG	JELDWEN SITELINE	SCD3760	38 1/8" x 60 3/4"	INSULATED	SEE ELEVS. FOR GRILLE PATTERN	
212	DOUBLE HUNG	JELDWEN SITELINE	SCD3760	38 1/8" x 60 3/4"	INSULATED	SEE ELEVS. FOR GRILLE PATTERN	
213	DOUBLE HUNG	JELDWEN SITELINE	SCD3364	34 1/8" x 64 3/4"	INSULATED	SEE ELEVS. FOR GRILLE PATTERN	
214	DOUBLE HUNG	JELDWEN SITELINE	SCD3364	34 1/8" x 64 3/4"	INSULATED	SEE ELEVS. FOR GRILLE PATTERN	
215	DOUBLE HUNG	JELDWEN SITELINE	SCD3364	34 1/8" x 64 3/4"	INSULATED	SEE ELEVS. FOR GRILLE PATTERN	
216	DOUBLE HUNG	JELDWEN SITELINE	SCD3760	38 1/8" x 60 3/4"	INSULATED	SEE ELEVS. FOR GRILLE PATTERN	
217	DOUBLE HUNG	JELDWEN SITELINE	SCD3760	38 1/8" x 60 3/4"	INSULATED	SEE ELEVS. FOR GRILLE PATTERN	

WINDOW SCHEDULE (ATTIC)

300	CASEMENT	JELDWEN SITELINE	SCC3048	30 3/4"x 48 3/4"	INSULATED	SEE ELEVS. FOR GRILLE PATTERN	
301	CASEMENT	JELDWEN SITELINE	SCC3048	30 3/4"x 48 3/4"	INSULATED	SEE ELEVS. FOR GRILLE PATTERN	
302	CASEMENT	JELDWEN SITELINE	SCC3048	30 3/4"x 48 3/4"	INSULATED	SEE ELEVS. FOR GRILLE PATTERN	

GTM ARCHITECTS

7735 OLD GEORGETOWN ROAD
SUITE 700
BETHESDA, MD 20814
(240)333-2000
(240)333-2001 FAX
WWW.GTMARCHITECTS.COM

Seal

Consultant

Project
19 HIGH ST
LOT 4

Owner

Developer

Issue Description	Date
PERMIT SET	04/11/2022

GTM Project No.	18.0320
Checked By	GTM
Drawn By	LEO/NW
Scale	AS NOTED

Sheet Title
DOOR & WINDOW SCHEDULES

Sheet No.
003

COPYRIGHT, 2019 GTM ARCHITECTS, INC.

GENERAL NOTES

1. Boundary information and two-foot contour data within noted "Limits of Topographic Survey" are based upon surveys performed by CAS Engineering, dated July, 2018.
2. The location of offsite trees, improvements and other structures beyond noted "Limits of Topographic Survey" are approximate. Offsite features are shown per available MNCPPC topographic records and are provided for illustrative purposes only.
3. Total lot area: Lot 4 =133,830.62 sq. ft. (3.072 ac.)
4. Property is located on Tax Map HU562 and WSSC 200' Sheet 227NW03.
5. Property is located on Montgomery County soils survey map number 14. Soil type(s): 1B, 1C, 6A & 16D. [Gaila silt loam, Baile silt loam & Brinklow-Blocktown channery silt loams] Hydrologic Soil Group "B" "C" & "D".
6. Flood zone "X" per F.E.M.A. Firm Maps, Community Panel Number 24031C0216D.
7. Property is located in the Hawlings River - Reddy Branch Watershed.
8. Water Category - 3, Sewer Category - 3
9. Local utilities include:
   Water / Sewer - Washington Suburban Sanitary Commission
   Electric - PEPCO
   Telephone - Verizon
   Gas - Washington Gas
10. Parcel 770 is located in the Town of Brookeville and the Brookeville Historic District.
11. This plan was created without the benefit of a title report.

TOWN OF BROOKEVILLE ZONING DATA

1. Zoning: Historic Village Residential (HVR)

Minimum Lot Area = 10,000 sq. ft.	Front B.R.L. = 15 ft.
Minimum Lot Width at R/W = 25 ft.	Rear B.R.L. = 40 ft. / 2 ft. (Accessory Structures)
Minimum Lot Width at B.R.L. = N/A	Side B.R.L. = 8 ft. / 2 ft. (Accessory Structures)

2. Verify main building height in accordance with the Town of Brookeville Zoning Ordinance.

Height of building from FF to highest point:	32.35 ft (32'-4 1/4" Per Arch.)
First floor elevation	434.60 ft
Height of building to highest point	32.35 ft
Elevation @ highest point	466.95 ft
Average elevation along front of building	432.23 ft

Height of building at highest point = 466.95 - 432.23 = 34.72 feet
Allowable height of building = 35 feet

Proposed height of building to highest point = 34.72

3. Verify accessory building height in accordance with the Town of Brookeville Zoning Ordinance.

Height of building from FF to highest point:	22.02 ft (22'-0 1/4" Per Arch.)
First floor elevation	432.60 ft
Height of accessory building to highest point	22.02 ft
Elevation @ highest point	454.62 ft
Average elevation along front of building	428.20 ft

Height of accessory building at highest point = 454.62 - 428.20 = 26.42 feet
Allowable height of accessory building = 35 feet

Proposed height of accessory building to highest point = 26.42 feet

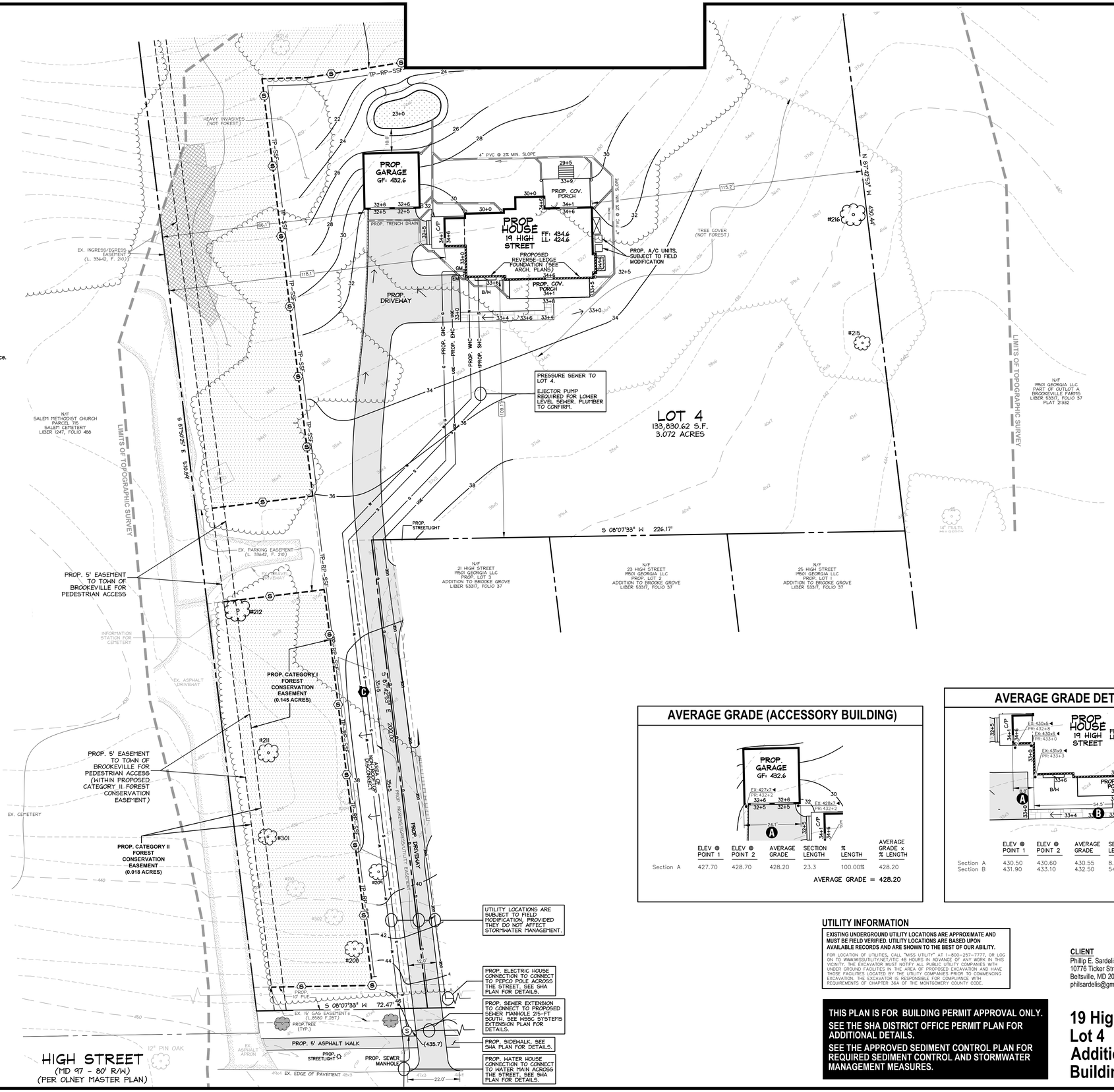

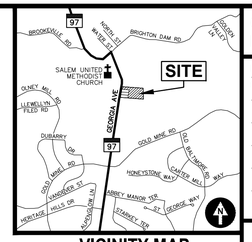

VICINITY MAP

ADC MAP 5050, GRID A-3, SCALE: 1" = 2000'

LEGEND

EXISTING FEATURES

- Ex. Sewer Manhole and Invert
- Ex. Water Line with Valve
- Ex. Gas Line with Valve
- Ex. Overhead Utility with Pole
- Ex. Two- And Ten-foot Contours
- Ex. Spot Elevation
- Ex. Canopy Line
- Ex. Tree
- Ex. Specimen Tree (DBH ≥ 30")
- Ex. Significant Tree (DBH ≥ 24")
- Ex. Tree (To Be Removed)

PROPOSED FEATURES

- Prop. Water-House Connection
- Prop. Sewer-House Connection
- Prop. Gas-House Connection
- Prop. Electric-House Connection
- Prop. Contour with Elevation
- Prop. Spot Elevation
- Prop. Surface Flow Direction
- Prop. Tree
- Prop. Streetlight

AVERAGE GRADE (ACCESSORY BUILDING)

	ELEV @ POINT 1	ELEV @ POINT 2	AVERAGE GRADE	SECTION LENGTH	% LENGTH	AVERAGE GRADE x % LENGTH
Section A	427.70	428.70	428.20	23.3	100.00%	428.20

AVERAGE GRADE = 428.20

AVERAGE GRADE DETERMINATION

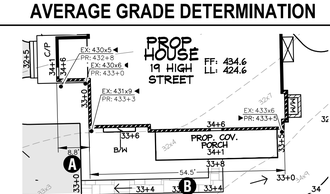

	ELEV @ POINT 1	ELEV @ POINT 2	AVERAGE GRADE	SECTION LENGTH	% LENGTH	AVERAGE GRADE x % LENGTH
Section A	430.50	430.60	430.55	8.8	13.90%	59.85
Section B	431.90	433.10	432.50	54.5	86.10%	372.38

AVERAGE GRADE = 432.23

UTILITY INFORMATION

EXISTING UNDERGROUND UTILITY LOCATIONS ARE APPROXIMATE AND MUST BE FIELD VERIFIED. UTILITY LOCATIONS ARE BASED UPON AVAILABLE RECORDS AND ARE SHOWN TO THE BEST OF OUR ABILITY.

FOR LOCATION OF UTILITIES, CALL "MISS UTILITY" AT 1-800-257-7777, OR LOG ON TO WWW.MISSUTILITY.NET/ITC 48 HOURS IN ADVANCE OF ANY WORK IN THIS VICINITY. THE EXCAVATOR MUST NOTIFY ALL PUBLIC UTILITY COMPANIES WITH UNDER GROUND FACILITIES IN THE AREA OF PROPOSED EXCAVATION AND HAVE THOSE FACILITIES LOCATED BY THE UTILITY COMPANIES PRIOR TO COMMENCING EXCAVATION. THE EXCAVATOR IS RESPONSIBLE FOR COMPLIANCE WITH REQUIREMENTS OF CHAPTER 36A OF THE MONTGOMERY COUNTY CODE.

THIS PLAN IS FOR BUILDING PERMIT APPROVAL ONLY.
SEE THE SHA DISTRICT OFFICE PERMIT PLAN FOR ADDITIONAL DETAILS.
SEE THE APPROVED SEDIMENT CONTROL PLAN FOR REQUIRED SEDIMENT CONTROL AND STORMWATER MANAGEMENT MEASURES.

CLIENT
Phillip E. Sardelis
10776 Ticker Street
Beltsville, MD 20705
philsardelis@gmail.com

ARCHITECT
GTM Architects
Attn: Luke Olson
7735 Old Georgetown Road, Suite 700
Bethesda, MD 20814
(240) 333-2021 Phone
lolson@gtmarchitects.com

19 High Street
Lot 4
Addition to Brooke Grove
Building Permit Site Plan

CAS JOB NO.:	16-579B
DATE:	04/2022

DATE	REVISION
04/01/22	SMF: Building Permit Site Plan to Arch for coordination.

Lot 4, Addition to Brooke Grove
Plat Pending
Olney (8th) Election District, Montgomery County, MD

19 High Street
Brookeville, Maryland 20833

CAS ENGINEERING

CAS ENGINEERING-MD
10 South Bentz Street
Frederick, Maryland 21701
301-607-8031 Phone
info@casengineering.com
www.casengineering.com

CAS ENGINEERING-DC, LLC
4836 MacArthur Boulevard, NW, 2nd Floor
Washington, DC 20007
202-393-7200 Phone
info@cas-dc.com
www.cas-dc.com

0 10 20 30 40
SCALE: 1 INCH = 20 FEET

SHEET TITLE:

Building Permit Site Plan

P:\2016\165798__23 High Street_Parcel 770\6 drawings\165579_BPSP_SCP_SWM.dwg, 4/1/2022 10:16:08 AM, smf, © 2022 CAS Engineering and CAS Engineering-DC, LLC

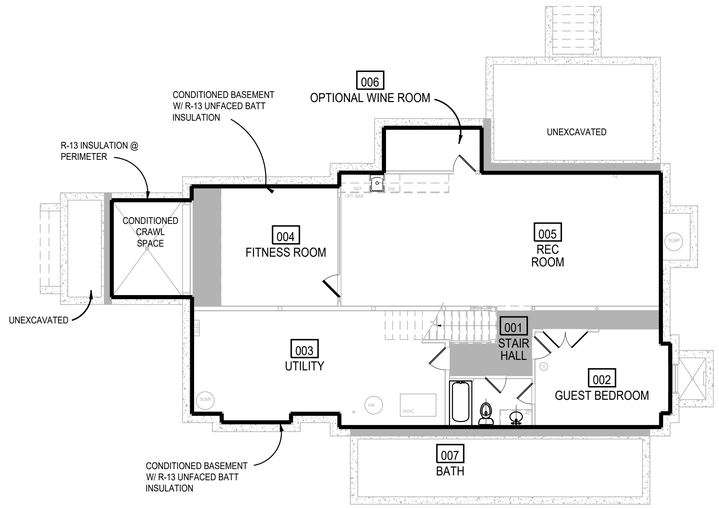

1 BASEMENT THERMAL ENVELOPE PLAN
SCALE: 1/8"=1'=0

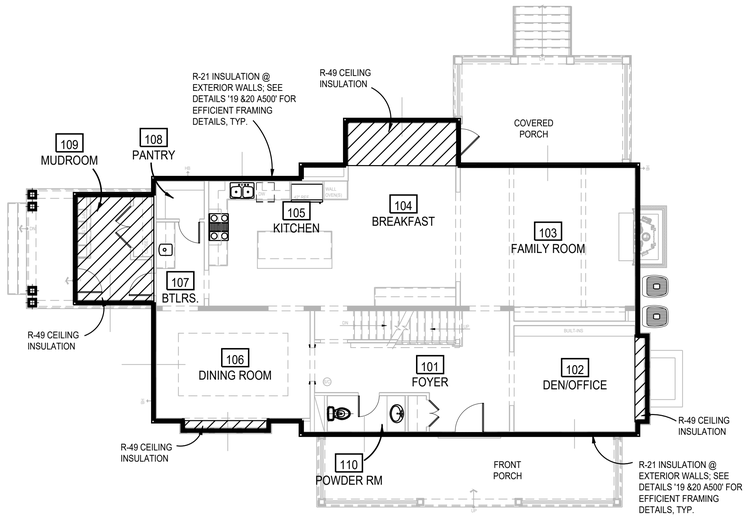

2 FIRST FLOOR THERMAL ENVELOPE PLAN
SCALE: 1/8"=1'=0

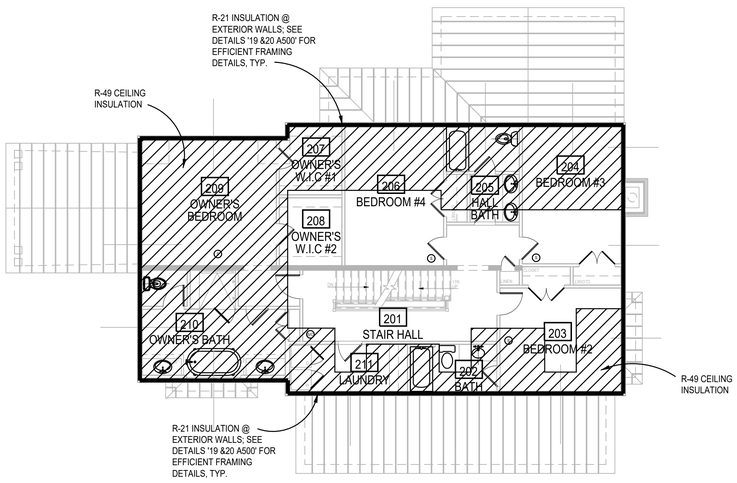

3 SECOND FLOOR THERMAL ENVELOPE PLAN
SCALE: 1/8"=1'=0

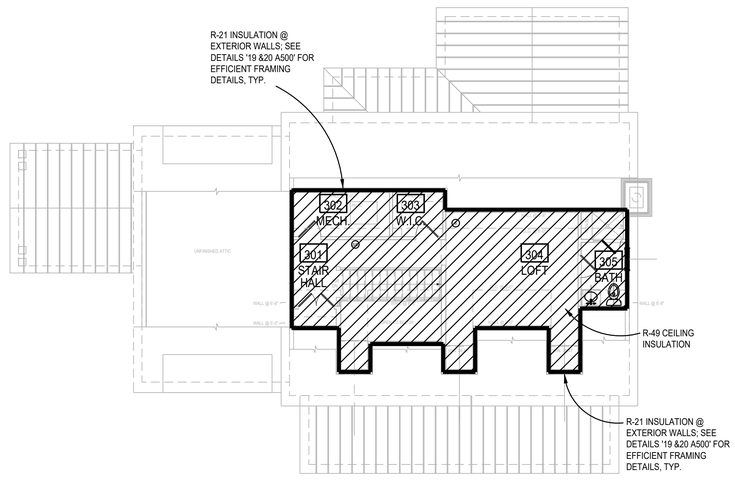

4 LOFT THERMAL ENVELOPE PLAN
SCALE: 1/8"=1'=0

WINDOW/DOORS THERMAL DATA

THERMAL PERFORMACE DATA FOR DOORS & WINDOWS

OPENING TYPE	U-VALUE	SHGC
CASEMENT WINDOWS	0.29	0.18
DOUBLE HUNG WINDOWS	0.30	0.18
SLIDING DOORS	0.28	0.19
EXTERIOR INSWINGING DOORS	0.29	0.16
OUT SWINGING PATIO DOORS	0.29	0.16
AWNING WINDOWS	0.29	0.18

THE AREA-WEIGHTED AVERAGE MAXIMUM FENESTRATION U-FACTOR PERMITTED USING TRADE-OFFS FROM SECTION 402.1 IN ZONE 4 SHALL BE .35 FOR VERTICAL FENESTRATION AND .55 FOR SKYLITES

ENERGY CONSERVATION NOTES

1. The following provisions for thermal resistance meet or exceed the requirements stipulated by the International Energy Conservation Code.
2. INSULATION: IRC

CEILING (OF UPPERMOST STORY)	R-49 W/ 500SF R-30 ALLOWANCE, OR R-38 CONTINUOUS
VAULTED CEILING	R-38
EXTERIOR FRAME WALLS	R-20 OR 13+5 (EXTERIOR)
RIM JOISTS	EQUAL TO WALL BELOW
FLOORS OVER UNHEATED SPACES (INCLUDING FLOOR OVERHANGS)	R-38
MASONRY WALLS (ENCLOSED HEATED LIVING AREAS)	R-13 OR R-10 CONTINUOUS
SLAB ON GRADE (HEATED SPACE) 24" PERIMETER INSULATION	R-10
WINDOWS	0.35 U FACTOR, 0.40 SHGC
DOORS	SEE SECTION R402.3.4

*ALL VALUES ARE TYPICAL UNLESS NOTED OTHERWISE IN ARCHITECTURAL DRAWINGS

3. Air Infiltration:
A. Windows: not exceeding five tenths (0.5) CFM of sash crack.
B. Sliding Glass Doors: not exceeding five tenths (0.5) CFM per foot of door area.
C. Swinging Doors: not exceeding one and twenty-five hundredths (1.25) CFM per square foot of door area.
Provide 1" fiberglass sill sealer between foundation wall and all sill plates.
D. In order to seal between dissimilar materials to allow for differential expansion and contraction, the following shall be caulked, gasketed, weatherstripped or otherwise sealed with an air barrier material, suitable film or solid material:
1. All joints, seams, and penetrations
2. Site-built windows, doors, and skylites
3. Openings between window and door assemblies and their respective jambs & framing
4. Utility penetrations
5. Dropped ceilings or chases adjacent to the thermal envelope
6. Knee walls
7. Walls and ceilings separating a garage from conditioned spaces
8. Behind tubs and showers on exterior walls
9. Common walls between dwelling units
10. Attic access openings
11. Rim joist junction
12. Other sources of infiltration

HVAC SYSTEMS & WATER HEATING

1. HEATING & COOLING EQUIP. CONTROLS. AT LEAST ONE PRE-PROGRAMMED PROGRAMMABLE THERMOSTAT IS REQUIRED WHEN USING A FORCED AIR SYSTEM. SEPARATE THERMOSTATS ARE REQUIRED FOR EACH HEATING/COOLING ZONE IN THE DWELLING.

2. DUCT INSULATION. SUPPLY DUCTS LOCATED OUTSIDE THE BUILDING THERMAL ENVELOPE SHALL BE INSULATED TO MINIMUM R-8, ALL OTHER DUCTS INSULATED TO A MINIMUM OF R-6

3. DUCT SEALING. ALL DUCTS, AIR HANDLERS, FILTER BOXES, & BUILDING CAVITIES MUST BE SEALED. JOINTS & SEAMS SHALL COMPLY W/ M1606.4.1 IRC

4. MECHANICAL SYSTEM PIPING INSULATION. R-3 FOR PIPING CARRYING FLUIDS AT >105°F OR <55°F IS REQUIRED

5. MECHANICAL VENTILATION. OUTDOOR AIR INTAKES OR EXHAUSTS SHALL HAVE DAMPERS

6. SERVICE WATER HEATING. PIPING IN THE CIRCULATING HOT WALTER SYSTEM SHALL BE INSULATED TO AN R-3 AND SYSTEM TO INCLUDE MANUAL OR AUTOMATIC SWITCH THAT CAN TURN OFF THE SYSTEM WHEN IT IS NOT USED, WATER HEATERS WITH PIPE RISERS SHALL HAVE HEAT TRAPS ON BOTH INLET AND OUTLET OF WATER HEATER UNLESS THE WATER HEATER HAS INTEGRAL HEAT TRAPS OR IS PART OF A CIRCULATION SYSTEM. TYPICAL METHODS USED FOR CREATING HEAT TRAPS ARE "U" OR "RAMS HORN" BENDS IN THE FLEXIBLE PIPE CONNECTORS OR INSTALLING AFTERMARKET PIPE NIPPLES WITH INTEGRAL TRAPS.

7. EQUIPMENT SIZING. HEATING AND COOLING EQUIPMENT SHALL BE SIZED BASED ON BUILDING LOADS CALCULATED IN ACCORDANCE WITH ACCA (AIR CONDITIONING CONTRACTORS OF AMERICA) MANUAL-J, A SIMPLIFIED METHOD OF CALCULATING HEATING AND COOLING LOADS. THE MANUAL-J CALCULATIONS SHALL BE SUBMITTED UPON APPLICATION FOR THE MECHANICAL PERMIT.

SECTION 302.1 OF IECC SPECIFIES THE INTERIOR DESIGN TEMPERATURES USED FOR HEATING AND COOLING LOAD CALCULATIONS AS MAXIMUM OF 72°F FOR HEATINGAND MINIMUM 75°F FOR COOLING.

LEGEND

INSULATION PERIMETER

AREA OF INSULATION ABOVE OR BELOW AS INDICATED

GTM ARCHITECTS

7735 OLD GEORGETOWN ROAD
SUITE 700
BETHESDA, MD 20814
(240)333-2000
(240)333-2001 FAX
WWW.GTMARCHITECTS.COM

Seal

Consultant

Project
19 HIGH ST
LOT 4

Owner

Developer

PERMIT SET	04/11/2022
Issue Description	Date

GTM Project No.	18.0320
Checked By	GTM
Drawn By	LEO/NW
Scale	AS NOTED

Sheet Title
THERMAL ENERGY DIAGRAMS

Sheet No.
EC001

COPYRIGHT, 2019 GTM ARCHITECTS, INC.

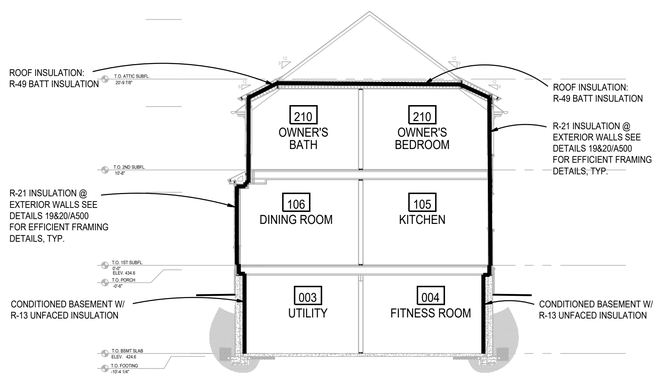

1 TYPICAL THERMAL ENVELOPE BUILDING SECTION

SCALE: 1/8"=1'=0

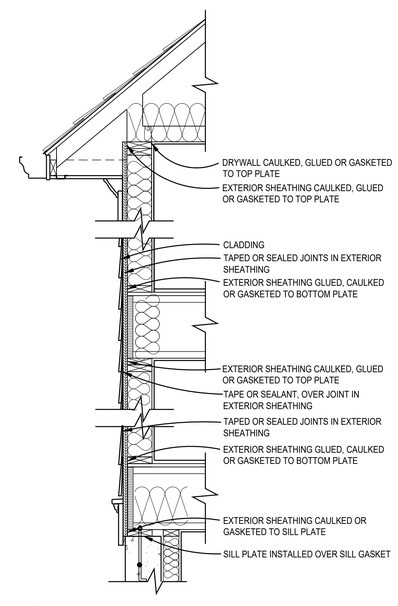

2 ENVELOPE AIR SEALING DETAIL

SCALE: 3/4"=1'-0"

*95 TOTAL SQ. FT. OF PROPOSED
R-38 CEILING/ATTIC INSULATION

500 SQ. FT ALLOWED PER IECC 402.2

WINDOW/DOORS THERMAL DATA

THERMAL PERFORMACE DATA FOR DOORS & WINDOWS

OPENING TYPE	U-VALUE	SHGC
CASEMENT WINDOWS	0.29	0.18
DOUBLE HUNG WINDOWS	0.30	0.18
SLIDING DOORS	0.28	0.19
EXTERIOR INSWINGING DOORS	0.29	0.16
OUT SWINGING PATIO DOORS	0.29	0.16
AWNING WINDOWS	0.29	0.18

THE AREA-WEIGHTED AVERAGE MAXIMUM FENESTRATION U-FACTOR PERMITTED USING TRADE-OFFS FROM SECTION 402.1 IN ZONE 4 SHALL BE .35 FOR VERTICAL FENESTRATION AND .55 FOR SKYLITES

ENERGY CONSERVATION NOTES

1. The following provisions for thermal resistance meet or exceed the requirements stipulated by the International Energy Conservation Code.
2. INSULATION: IRC

CEILING (OF UPPERMOST STORY)	R-49 W/ 500SF R-30 ALLOWANCE, OR R-38 CONTINUOUS
VAULTED CEILING	R-38
EXTERIOR FRAME WALLS	R-20 OR 13+5 (EXTERIOR)
RIM JOISTS	EQUAL TO WALL BELOW
FLOORS OVER UNHEATED SPACES (INCLUDING FLOOR OVERHANGS)	R-38
MASONRY WALLS (ENCLOSED HEATED LIVING AREAS)	R-13 OR R-10 CONTINUOUS
SLAB ON GRADE (HEATED SPACE) 24" PERIMETER INSULATION	R-10
WINDOWS	0.35 U FACTOR, 0.40 SHGC
DOORS	SEE SECTION R402.3.4

*ALL VALUES ARE TYPICAL UNLESS NOTED OTHERWISE IN ARCHITECTURAL DRAWINGS

3. Air Infiltration:
A. Windows: not exceeding five tenths (0.5) CFM of sash crack.
B. Sliding Glass Doors: not exceeding five tenths (0.5) CFM per foot of door area.
C. Swinging Doors: not exceeding one and twenty-five hundredths (1.25) CFM per square foot of door area.
Provide 1" fiberglass sill sealer between foundation wall and all sill plates.
D. In order to seal between dissimilar materials to allow for differential expansion and contraction, the following shall be caulked, gasketed, weatherstripped or otherwise sealed with an air barrier material, suitable film or solid material:

1. All joints, seams, and penetrations
2. Site-built windows, doors, and skylites
3. Openings between window and door assemblies and their respective jambs & framing
4. Utility penetrations
5. Dropped ceilings or chases adjacent to the thermal envelope
6. Knee walls
7. Walls and ceilings separating a garage from conditioned spaces
8. Behind tubs and showers on exterior walls
9. Common walls between dwelling units
10. Attic access openings
11. Rim joist junction
12. Other sources of infiltration

HVAC SYSTEMS & WATER HEATING

1. HEATING & COOLING EQUIP. CONTROLS. AT LEAST ONE PRE-PROGRAMMED PROGRAMMABLE THERMOSTAT IS REQUIRED WHEN USING A FORCED AIR SYSTEM. SEPARATE THERMOSTATS ARE REQUIRED FOR EACH HEATING/COOLING ZONE IN THE DWELLING.

2. DUCT INSULATION. SUPPLY DUCTS LOCATED OUTSIDE THE BUILDING THERMAL ENVELOPE SHALL BE INSULATED TO MINIMUM R-8, ALL OTHER DUCTS INSULATED TO A MINIMUM OF R-6

3. DUCT SEALING. ALL DUCTS, AIR HANDLERS, FILTER BOXES, & BUILDING CAVITIES MUST BE SEALED. JOINTS & SEAMS SHALL COMPLY W/ M1606.4.1 IRC

4. MECHANICAL SYSTEM PIPING INSULATION. R-3 FOR PIPING CARRYING FLUIDS AT >105°F OR <55°F IS REQUIRED

5. MECHANICAL VENTILATION. OUTDOOR AIR INTAKES OR EXHAUSTS SHALL HAVE DAMPERS

6. SERVICE WATER HEATING. PIPING IN THE CIRCULATING HOT WALTER SYSTEM SHALL BE INSULATED TO AN R-3 AND SYSTEM TO INCLUDE MANUAL OR AUTOMATIC SWITCH THAT CAN TURN OFF THE SYSTEM WHEN IT IS NOT USED, WATER HEATERS WITH PIPE RISERS SHALL HAVE HEAT TRAPS ON BOTH INLET AND OUTLET OF WATER HEATER UNLESS THE WATER HEATER HAS INTEGRAL HEAT TRAPS OR IS PART OF A CIRCULATION SYSTEM. TYPICAL METHODS USED FOR CREATING HEAT TRAPS ARE "U" OR "RAMS HORN" BENDS IN THE FLEXIBLE PIPE CONNECTORS OR INSTALLING AFTERMARKET PIPE NIPPLES WITH INTEGRAL TRAPS.

7. EQUIPMENT SIZING. HEATING AND COOLING EQUIPMENT SHALL BE SIZED BASED ON BUILDING LOADS CALCULATED IN ACCORDANCE WITH ACCA (AIR CONDITIONING CONTRACTORS OF AMERICA) MANUAL-J, A SIMPLIFIED METHOD OF CALCULATING HEATING AND COOLING LOADS. THE MANUAL-J CALCULATIONS SHALL BE SUBMITTED UPON APPLICATION FOR THE MECHANICAL PERMIT.

SECTION 302.1 OF IECC SPECIFIES THE INTERIOR DESIGN TEMPERATURES USED FOR HEATING AND COOLING LOAD CALCULATIONS AS MAXIMUM OF 72°F FOR HEATINGAND MINIMUM 75°F FOR COOLING.

LEGEND

INSULATION PERIMETER

AREA OF INSULATION ABOVE OR BELOW AS INDICATED

GTM ARCHITECTS

7735 OLD GEORGETOWN ROAD
SUITE 700
BETHESDA, MD 20814
(240)333-2000
(240)333-2001 FAX
WWW.GTMARCHITECTS.COM

Seal

I certify that these documents were prepared or approved by me, and that I am a duly licensed architect under the laws of the State of Maryland, license number 8886, Expiration Date: 12/06/2022.

Consultant

Project

19 HIGH ST
LOT 4

Owner

Developer

Issue Description	Date
PERMIT SET	04/11/2022

GTM Project No.	18.0320
Checked By	GTM
Drawn By	LEO/NW
Scale	AS NOTED

Sheet Title

THERMAL ENERGY DIAGRAMS

Sheet No.

EC002

COPYRIGHT, 2019 GTM ARCHITECTS, INC.

FILE NAME:

Generated by RES*check-Web* Software

Compliance Certificate

Project 18.0320_19 HIGH STREET_LOT 4

Energy Code: **2018 IECC**
Location: **Brookeville, Maryland**
Construction Type: **Single-family**
Project Type: **New Construction**
Conditioned Floor Area: **1,940 ft2**
Glazing Area **17%**
Climate Zone: **4 (5093 HDD)**
Permit Date:
Permit Number:

Construction Site:

Owner/Agent: Alabama

Designer/Contractor: Alabama

Compliance: Passes using UA trade-off

Compliance: **4.4% Better Than Code** Maximum UA: **614** Your UA: **587** Maximum SHGC: **0.40** Your SHGC: **0.18**

The % Better or Worse Than Code Index reflects how close to compliance the house is based on code trade-off rules. It DOES NOT provide an estimate of energy use or cost relative to a minimum code home.

Slab-on-grade tradeoffs are no longer considered in the UA or performance compliance path in REScheck. Each slab-on-grade assembly in the specified climate zone must meet the minimum energy code insulation R-value and depth requirements.

Envelope Assemblies

Assembly	Gross Area or Perimeter	Cavity R-Value	Cont. R-Value	Prop. U-Factor	Req. U-Factor	Prop. UA	Req. UA
Ceiling: Flat Ceiling or Scissor Truss	1,816	49.0	0.0	0.026	0.026	47	47
Wall: Wood Frame, 16" o.c.	4,278	21.0	0.0	0.057	0.060	200	210
FRONT DOOR: Solid Door (under 50% glazing)	52			0.290	0.320	15	17
IN swing patio door: Glass Door (over 50% glazing) SHGC: 0.16	26			0.290	0.320	7	8
OUT swing patio door: Glass Door (over 50% glazing) SHGC: 0.16	26			0.290	0.320	7	8
sliding door: Glass Door (over 50% glazing) SHGC: 0.19	96			0.280	0.320	27	31
DOUBLE HUNG: Wood Frame SHGC: 0.18	495			0.300	0.320	148	158
CASEMENT: Wood Frame SHGC: 0.18	53			0.290	0.320	15	17
AWNING: Wood Frame SHGC: 0.18	30			0.290	0.320	9	9
Basement Wall: Solid Concrete or Masonry Wall height: 9.1' Depth below grade: 7.3' Insulation depth: 9.1'	1,735	13.0	0.0	0.060	0.059	104	102
Crawl Wall: Solid Concrete or Masonry Wall height: 5.9' Depth below grade: 4.6' Insulation depth: 5.9'	188	13.0	0.0	0.077	0.065	8	7

Compliance Statement: The proposed building design described here is consistent with the building plans, specifications, and other calculations submitted with the permit application. The proposed building has been designed to meet the 2018 IECC requirements in REScheck Version : REScheck-Web and to comply with the mandatory requirements listed in the REScheck Inspection Checklist.

Name - Title Signature Date

RES*check* Software Version : REScheck-Web

Inspection Checklist

Energy Code: 2018 IECC

Requirements: 0.0% were addressed directly in the RES*check* software

Text in the "Comments/Assumptions" column is provided by the user in the REScheck Requirements screen. For each requirement, the user certifies that a code requirement will be met and how that is documented, or that an exception is being claimed. Where compliance is itemized in a separate table, a reference to that table is provided.

Section # & Req.ID	Pre-Inspection/Plan Review	Plans Verified Value	Field Verified Value	Complies?	Comments/Assumptions
103.1, 103.2 [PR1][1]	Construction drawings and documentation demonstrate energy code compliance for the building envelope. Thermal envelope represented on construction documents.			☐Complies ☐Does Not ☐Not Observable ☐Not Applicable	
103.1, 103.2, 403.7 [PR3][2]	Construction drawings and documentation demonstrate energy code compliance for lighting and mechanical systems. Systems serving multiple dwelling units must demonstrate compliance with the IECC Commercial Provisions.			☐Complies ☐Does Not ☐Not Observable ☐Not Applicable	
302.1, 403.7 [PR2][2]	Heating and cooling equipment is sized per ACCA Manual S based on loads calculated per ACCA Manual J or other methods approved by the code official.	Heating: Btu/hr Cooling: Btu/hr	Heating: Btu/hr Cooling: Btu/hr	☐Complies ☐Does Not ☐Not Observable ☐Not Applicable	

Additional Comments/Assumptions:

1 High Impact (Tier 1) 2 Medium Impact (Tier 2) 3 Low Impact (Tier 3)

Section # & Req.ID	Foundation Inspection	Plans Verified Value	Field Verified Value	Complies?	Comments/Assumptions
402.1.1 [FO4][1]	Conditioned basement wall insulation R-value. Where interior insulation is installed, inspection may need to occur during insulation inspection. Not required in warm-humid locations in Climate Zone 3.	R-____ R-____	R-____ R-____	☐Complies ☐Does Not ☐Not Observable ☐Not Applicable	*See the Envelope Assemblies table for values.*
303.2 [FO5][1]	Conditioned basement wall insulation installed per manufacturer's instructions.			☐Complies ☐Does Not ☐Not Observable ☐Not Applicable	
402.2.9 [FO6][1]	Conditioned basement wall insulation depth of burial or distance from top of wall.	____ ft;	____ ft;	☐Complies ☐Does Not ☐Not Observable ☐Not Applicable	*See the Envelope Assemblies table for values.*
402.2.11 [FO7][1]	Unvented crawl space wall insulation R-value.	R-____ R-____	R-____ R-____	☐Complies ☐Does Not ☐Not Observable ☐Not Applicable	*See the Envelope Assemblies table for values.*
303.2 [FO8][1]	Unvented crawl space wall insulation installed per manufacturer's instructions.			☐Complies ☐Does Not ☐Not Observable ☐Not Applicable	
402.2.11 [FO9][1]	Unvented crawl space continuous vapor retarder installed over exposed earth, joints overlapped by 6 in. and sealed, extending at least 6 in. up and attached to the wall.			☐Complies ☐Does Not ☐Not Observable ☐Not Applicable	
402.2.11 [FO10][1]	Unvented crawl space wall insulation depth of burial or distance from top of wall.	____ in.	____ in.	☐Complies ☐Does Not ☐Not Observable ☐Not Applicable	*See the Envelope Assemblies table for values.*
303.2.1 [FO11][1]	A protective covering is installed to protect exposed exterior insulation and extends a minimum of 6 in. below grade.			☐Complies ☐Does Not ☐Not Observable ☐Not Applicable	
403.9 [FO12][1]	Snow- and ice-melting system controls installed.			☐Complies ☐Does Not ☐Not Observable ☐Not Applicable	

Additional Comments/Assumptions:

1 High Impact (Tier 1) 2 Medium Impact (Tier 2) 3 Low Impact (Tier 3)

Section # & Req.ID	Framing / Rough-In Inspection	Plans Verified Value	Field Verified Value	Complies?	Comments/Assumptions
402.1.1, 402.3.4 [FR1][1]	Door U-factor.	U-_____	U-_____	☐Complies ☐Does Not ☐Not Observable ☐Not Applicable	*See the Envelope Assemblies table for values.*
402.1.1, 402.2.1, 402.3.1, 402.3.3, 402.5 [FR2][1]	Glazing U-factor (area-weighted average).	U-_____	U-_____	☐Complies ☐Does Not ☐Not Observable ☐Not Applicable	*See the Envelope Assemblies table for values.*
303.1.3 [FR4][1]	U-factors of fenestration products are determined in accordance with the NFRC test procedure or taken from the default table.			☐Complies ☐Does Not ☐Not Observable ☐Not Applicable	
402.4.1.1 [FR23][1]	Air barrier and thermal barrier installed per manufacturer's instructions.			☐Complies ☐Does Not ☐Not Observable ☐Not Applicable	
402.4.3 [FR20][1]	Fenestration that is not site built is listed and labeled as meeting AAMA /WDMA/CSA 101/I.S.2/A440 or has infiltration rates per NFRC 400 that do not exceed code limits.			☐Complies ☐Does Not ☐Not Observable ☐Not Applicable	
402.4.5 [FR16][1]	IC-rated recessed lighting fixtures sealed at housing/interior finish and labeled to indicate ≤2.0 cfm leakage at 75 Pa.			☐Complies ☐Does Not ☐Not Observable ☐Not Applicable	
403.3.1 [FR12][1]	Supply and return ducts in attics insulated >= R-8 where duct is >= 3 inches in diameter and >= R-6 where < 3 inches. Supply and return ducts in other portions of the building insulated >= R-6 for diameter >= 3 inches and R-4.2 for < 3 inches in diameter.			☐Complies ☐Does Not ☐Not Observable ☐Not Applicable	
403.3.2 [FR13][1]	Ducts, air handlers and filter boxes are sealed with joints/seams compliant with International Mechanical Code or International Residential Code, as applicable.			☐Complies ☐Does Not ☐Not Observable ☐Not Applicable	
403.3.5 [FR15][1]	Building cavities are not used as ducts or plenums.			☐Complies ☐Does Not ☐Not Observable ☐Not Applicable	
403.4 [FR17][1]	HVAC piping conveying fluids above 105 ºF or chilled fluids below 55 ºF are insulated to ≥R-3.	R-_____	R-_____	☐Complies ☐Does Not ☐Not Observable ☐Not Applicable	
403.4.1 [FR24][1]	Protection of insulation on HVAC piping.			☐Complies ☐Does Not ☐Not Observable ☐Not Applicable	
403.5.3 [FR18][1]	Hot water pipes are insulated to ≥R-3.	R-_____	R-_____	☐Complies ☐Does Not ☐Not Observable ☐Not Applicable	

1 High Impact (Tier 1) 2 Medium Impact (Tier 2) 3 Low Impact (Tier 3)

Section # & Req.ID	Framing / Rough-In Inspection	Plans Verified Value	Field Verified Value	Complies?	Comments/Assumptions
403.6 [FR19][1]	Automatic or gravity dampers are installed on all outdoor air intakes and exhausts.			☐Complies ☐Does Not ☐Not Observable ☐Not Applicable	

Additional Comments/Assumptions:

1 High Impact (Tier 1) 2 Medium Impact (Tier 2) 3 Low Impact (Tier 3)

Section # & Req.ID	Insulation Inspection	Plans Verified Value	Field Verified Value	Complies?	Comments/Assumptions
303.1 [IN3][1]	All installed insulation is labeled or the installed R-values provided.			☐Complies ☐Does Not ☐Not Observable ☐Not Applicable	
402.1.1, 402.2.2, 402.2.6 [IN5][1]	Wall insulation R-value. If this is a mass wall with at least ½ of the wall insulation on the wall exterior, the exterior insulation requirement applies (FR10).	R-_____ ☐ Wood ☐ Mass ☐ Steel	R-_____ ☐ Wood ☐ Mass ☐ Steel	☐Complies ☐Does Not ☐Not Observable ☐Not Applicable	*See the Envelope Assemblies table for values.*
303.2 [IN4][1]	Wall insulation is installed per manufacturer's instructions.			☐Complies ☐Does Not ☐Not Observable ☐Not Applicable	

Additional Comments/Assumptions:

1 High Impact (Tier 1) 2 Medium Impact (Tier 2) 3 Low Impact (Tier 3)

Section # & Req.ID	Final Inspection Provisions	Plans Verified Value	Field Verified Value	Complies?	Comments/Assumptions
402.1.1, 402.2.1, 402.2.2, 402.2.6 [FI1][1]	Ceiling insulation R-value.	R-_____ ☐ Wood ☐ Steel	R-_____ ☐ Wood ☐ Steel	☐Complies ☐Does Not ☐Not Observable ☐Not Applicable	*See the Envelope Assemblies table for values.*
303.1.1.1, 303.2 [FI2][1]	Ceiling insulation installed per manufacturer's instructions. Blown insulation marked every 300 ft².			☐Complies ☐Does Not ☐Not Observable ☐Not Applicable	
402.2.3 [FI22][1]	Vented attics with air permeable insulation include baffle adjacent to soffit and eave vents that extends over insulation.			☐Complies ☐Does Not ☐Not Observable ☐Not Applicable	
402.2.4 [FI3][1]	Attic access hatch and door insulation ≥R-value of the adjacent assembly.	R-_____	R-_____	☐Complies ☐Does Not ☐Not Observable ☐Not Applicable	
402.4.1.2 [FI17][1]	Blower door test @ 50 Pa. <=5 ach in Climate Zones 1-2, and <=3 ach in Climate Zones 3-8.	ACH 50 =_____	ACH 50 =_____	☐Complies ☐Does Not ☐Not Observable ☐Not Applicable	
403.3.3 [FI27][1]	Ducts are pressure tested to determine air leakage with either: Rough-in test: Total leakage measured with a pressure differential of 0.1 inch w.g. across the system including the manufacturer's air handler enclosure if installed at time of test. Postconstruction test: Total leakage measured with a pressure differential of 0.1 inch w.g. across the entire system including the manufacturer's air handler enclosure.	____ cfm/100 ft²²	____ cfm/100 ft²²	☐Complies ☐Does Not ☐Not Observable ☐Not Applicable	
403.3.4 [FI4][1]	Duct tightness test result of <=4 cfm/100 fl2 across the system or <=3 cfm/100 ft2 without air handler @ 25 Pa. For rough-in tests, verification may need to occur during Framing Inspection.	____ cfm/100 ft²²	____ cfm/100 ft²²	☐Complies ☐Does Not ☐Not Observable ☐Not Applicable	
403.3.2.1 [FI24][1]	Air handler leakage designated by manufacturer at <=2% of design air flow.			☐Complies ☐Does Not ☐Not Observable ☐Not Applicable	
403.1.1 [FI9][1]	Programmable thermostats installed for control of primary heating and cooling systems and initially set by manufacturer to code specifications.			☐Complies ☐Does Not ☐Not Observable ☐Not Applicable	
403.1.2 [FI10][1]	Heat pump thermostat installed on heat pumps.			☐Complies ☐Does Not ☐Not Observable ☐Not Applicable	
403.5.1 [FI11][1]	Circulating service hot water systems have automatic or accessible manual controls.			☐Complies ☐Does Not ☐Not Observable ☐Not Applicable	

1 High Impact (Tier 1) 2 Medium Impact (Tier 2) 3 Low Impact (Tier 3)

Section # & Req.ID	Final Inspection Provisions	Plans Verified Value	Field Verified Value	Complies?	Comments/Assumptions
403.6.1 [FI25][1]	All mechanical ventilation system fans not part of tested and listed HVAC equipment meet efficacy and air flow limits per Table R403.6.1.			☐Complies ☐Does Not ☐Not Observable ☐Not Applicable	
403.2 [FI26][1]	Hot water boilers supplying heat through one- or two-pipe heating systems have outdoor setback control to lower boiler water temperature based on outdoor temperature.			☐Complies ☐Does Not ☐Not Observable ☐Not Applicable	
403.5.1.1 [FI28][1]	Heated water circulation systems have a circulation pump. The system return pipe is a dedicated return pipe or a cold water supply pipe. Gravity and thermo-syphon circulation systems are prohibited. Controls for circulating hot water system pumps start the pump with signal for hot water demand within the occupancy. Controls automatically turn off the pump when water is in circulation loop is at set-point temperature and no demand for hot water exists.			☐Complies ☐Does Not ☐Not Observable ☐Not Applicable	
403.5.1.2 [FI29][1]	Electric heat trace systems comply with IEEE 515.1 or UL 515. Controls automatically adjust the energy input to the heat tracing to maintain the desired water temperature in the piping.			☐Complies ☐Does Not ☐Not Observable ☐Not Applicable	
403.5.2 [FI30][1]	Demand recirculation water systems have controls that manage operation of the pump and limit the temperature of the water entering the cold water piping to <= 104ºF.			☐Complies ☐Does Not ☐Not Observable ☐Not Applicable	
403.5.4 [FI31][1]	Drain water heat recovery units tested in accordance with CSA B55.1. Potable water-side pressure loss of drain water heat recovery units < 3 psi for individual units connected to one or two showers. Potable water-side pressure loss of drain water heat recovery units < 2 psi for individual units connected to three or more showers.			☐Complies ☐Does Not ☐Not Observable ☐Not Applicable	
404.1 [FI6][1]	90% or more of permanent fixtures have high efficacy lamps.			☐Complies ☐Does Not ☐Not Observable ☐Not Applicable	
404.1.1 [FI23][1]	Fuel gas lighting systems have no continuous pilot light.			☐Complies ☐Does Not ☐Not Observable ☐Not Applicable	
401.3 [FI7][2]	Compliance certificate posted.			☐Complies ☐Does Not ☐Not Observable ☐Not Applicable	

1 High Impact (Tier 1) 2 Medium Impact (Tier 2) 3 Low Impact (Tier 3)

Section # & Req.ID	Final Inspection Provisions	Plans Verified Value	Field Verified Value	Complies?	Comments/Assumptions
303.3 [FI18][1]	Manufacturer manuals for mechanical and water heating systems have been provided.			☐Complies ☐Does Not ☐Not Observable ☐Not Applicable	

Additional Comments/Assumptions:

2018 IECC Energy Efficiency Certificate

Insulation Rating	R-Value
Above-Grade Wall	**21.00**
Below-Grade Wall	**13.00**
Floor	**0.00**
Ceiling / Roof	**49.00**
Ductwork (unconditioned spaces):	_____

Glass & Door Rating	U-Factor	SHGC
Window	**0.30**	**0.18**
Door	**0.28**	**0.19**

Heating & Cooling Equipment	Efficiency
Heating System:_____	_____
Cooling System:_____	_____
Water Heater:_____	_____

Name: _____ **Date:**_____

Comments

GTM ARCHITECTS

7735 OLD GEORGETOWN ROAD
SUITE 700
BETHESDA, MD 20814
(240)333-2000
(240)333-2001 FAX
WWW.GTMARCHITECTS.COM

Seal

I certify that these documents were prepared or approved by me, and that I am a duly licensed architect under the laws of the State of Maryland, license number 8880, Expiration Date: 12/06/2022

Consultant

Project

19 HIGH ST
LOT 4

Owner

Developer

Issue Description	*Date*
PERMIT SET	04/11/2022

GTM Project No.	18.0320
Checked By	GTM
Drawn By	LEO/NW
Scale	AS NOTED

Sheet Title

RESCHECK
REPORT

Sheet No.

EC003

COPYRIGHT, 2019 GTM ARCHITECTS, INC.

FILE NAME:

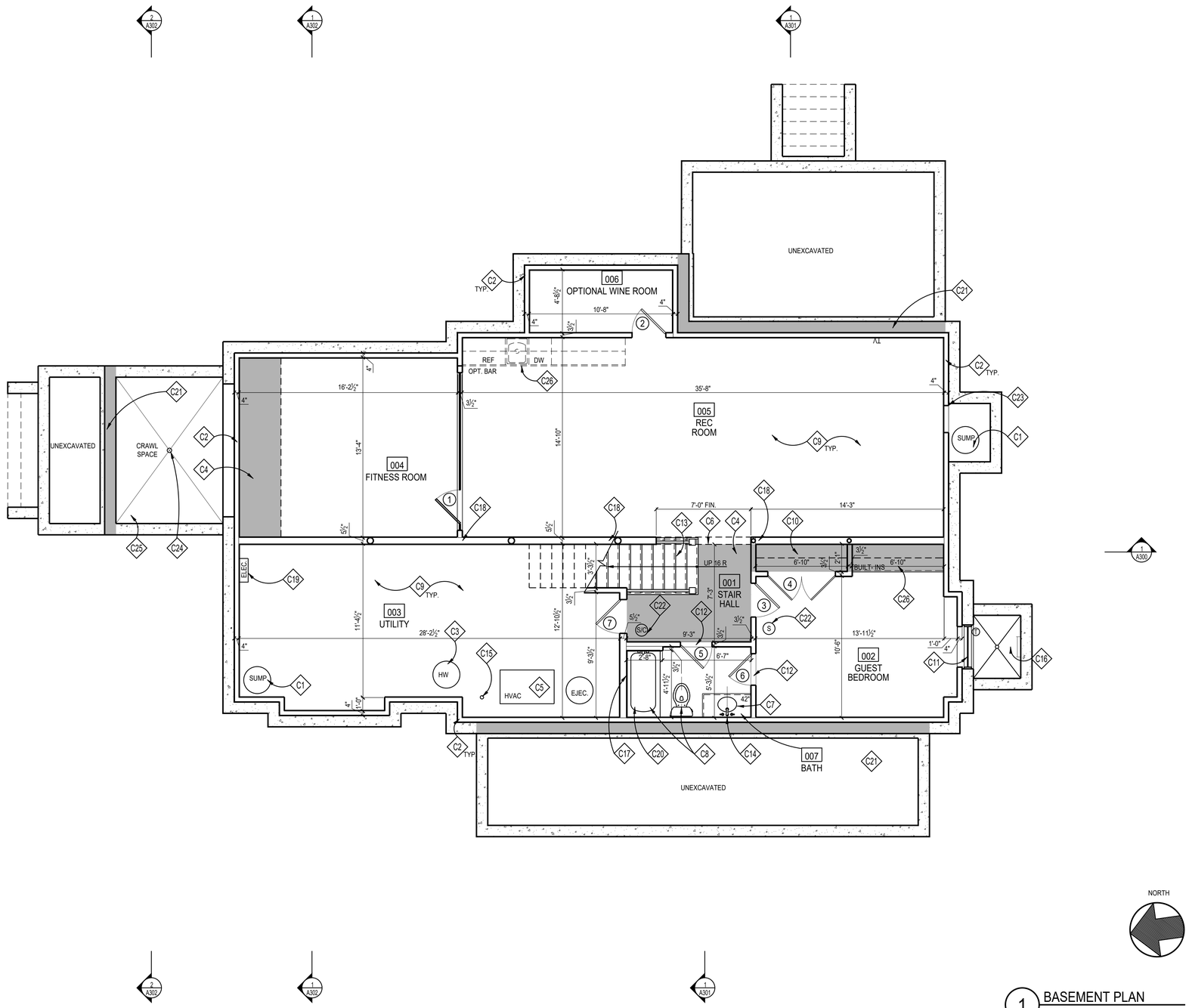

1 BASEMENT PLAN
SCALE: 1/4"=1'=0

NORTH

CONSTRUCTION NOTES

- C1 SUMP PUMP WITH BATTERY POWERED SUMP BACKUP; LOCATION T.B.D.
- C2 FUR OUT WALLS W/ FULL 2x4's W/ R-13 BATT INSULATION, TYP.; PROVIDE P.T. SILL; HOLD 1/2" OFF MASONRY WALL
- C3 HOT WATER HEATER, LOCATION APPROXIMATE, SEE SHEET '002'
- C4 TONED AREA INDICATES LOWERED CEILING TO ALLOW FOR DUCTWORK, BEAMS AND/OR AESTHETIC APPEAL
- C5 HVAC, SEE SHEET '002'
- C6 CASED OPENING @ 7'-0" FINISHED
- C7 VANITY W/ SINK, FAUCET & COUNTERTOP; T.B.S.
- C8 PLUMBING FIXTURES & ACCESSORIES T.B.S.
- C9 REINF. CONC. SLAB ON GRADE; SEE FOUNDATION PLAN
- C10 PROVIDE CLOSET ROD & SHELF
- C11 EGRESS WINDOW; MAX. 44" SILL HEIGHT FROM A.F.F.
- C12 MARBLE THRESHOLD T.B.S.
- C13 WD. STEPS; 1x RISERS W/ TREADS TO MATCH H.W.F.; WOOD RAILING T.B.S. SEE DETAILS '1, 6/A302', FOLLOW IRC 2018 R311.7 FOR STAIR AND RAILING
- C14 1/4" POLISHED PLATE GLASS MIRROR, T.B.S.
- C15 DRAIN FOR HWH & HVAC. LOCATION T.B.D., RUN TO SUMP PUMP
- C16 WINDOW WELL; EGRESS LADDER & COVER AS REQ'D. BY CODE DRAIN TO SUMP PUMP OR DAYLIGHT
- C17 12" W x 14" H TILED RECESS w/ SLOPED SILL @ 42" A.F.F.
- C18 STEEL COLUMN, SEE FOUNDATION AND FRAMING PLANS
- C19 APPROXIMATE ELECTRICAL PANEL LOCATION; FIELD VERIFY FINAL LOCATION
- C20 TUB & SHOWER FLOORS AND WALLS SHALL BE FINISHED W/ A NON-ABSORBENT SURFACE AT LEAST 6" ABOVE THE FLOOR, PER IRC 2018
- C21 TONED WALL INDICATES EXTENT OF REVERSE LEDGE; SEE FOUNDATION & FRAMING PLANS
- C22 INSTALL INTERCONNECTED & HARD-WIRED SMOKE DETECTORS/ SMOKE & CARBON MONOXIDE DETECTORS IN ACCORDANCE W/ IRC 2018
- C23 ACCESS PANEL PER IRC 2018
- C24 FLOOR DRAIN, DRAIN TO SUMP
- C25 MIN. 3" CONC. MUDSLAB, SLOPE TO DRAIN
- C26 PROVIDE CUSTOM BUILT-INS
- C27 EJECTOR PUMP, TBS

NOTE:

1. UNLESS INDICATED OTHERWISE, DIMENSIONS ARE TO FACE OF FRAMING
2. VERIFY ALL EXTERIOR RISER + TREAD DIMENSIONS IN THE FIELD
3. SEE DETAILS 18-20/A304' FOR ENERGY EFFICIENT FRAMING DETAILS
4. PROVIDE MINERAL WOOL SOUND INSULATION IN WALLS, CEILING, + FLOOR OF THE FOLLOWING ROOMS (U.N.O.):

   003 UTILITY
   007 BATH

5. (T) = TEMPERED GLASS

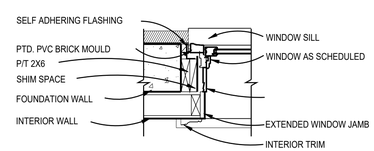

2 TYP. BASEMENT WINDOW/DOOR JAMB
Scale: 1"=1'-0"

WALL TYPES

TYPICAL NEW EXTERIOR WALL: 10" CONC. WALL; SEE FOUNDATION PLAN; FUR WHERE SHOWN WITH 2x4 STUDS @ 16" O.C., (SEE THERMAL ENVELOPE, SHEET "EC001" FOR INSULATION INFORMATION)

TYPICAL NON-BEARING INTERIOR PARTITION: 2"x4" STUDS 16" O.C. W/ ½" GYP. BD. EACH SIDE; INCREASE WALL THICKNESS AS SHOWN TO ALIGN FINISHES WHERE SHOWN

GTM ARCHITECTS

7735 OLD GEORGETOWN ROAD
SUITE 700
BETHESDA, MD 20814
(240)333-2000
(240)333-2001 FAX
WWW.GTMARCHITECTS.COM

Seal

Consultant

Project
19 HIGH ST
LOT 4

Owner

Developer

PERMIT SET	04/11/2022

Issue Description	Date

GTM Project No.	18.0320
Checked By	GTM
Drawn By	LEO/NW
Scale	AS NOTED

Sheet Title
BASEMENT PLAN

Sheet No.
A100

COPYRIGHT, 2019 GTM ARCHITECTS, INC.

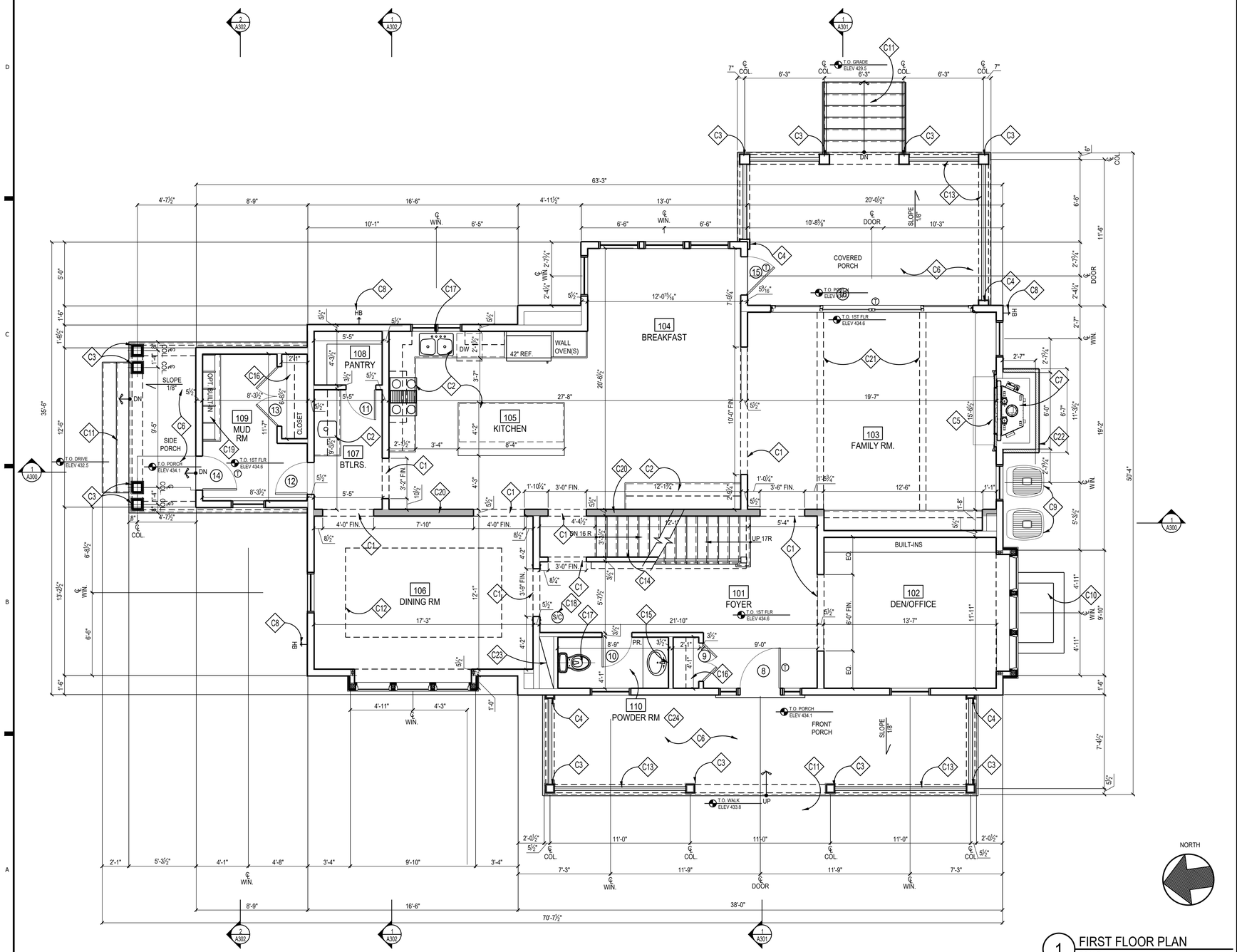

1 FIRST FLOOR PLAN
SCALE: 1/4"=1'=0

CONSTRUCTION NOTES

- C1 CASED OPENING @ 8'-0" FINISHED
- C2 KITCHEN CABINETS, APPLIANCES + COUNTER TOPS, ETC. T.B.S.
- C3 SQUARE COLUMN, BUILT UP FROM 2x10's, PTD. (WRAP 6x6 POST) OR 10" SQ. HB&G PERMACAST COLUMN CUT FROM 9'-0" STOCK W/ TUSCAN BASE AND CAPITAL
- C4 PTD. PILASTER TO MATCH COLUMNS; SEE ELEVATIONS
- C5 HEARTH, MATERIAL T.B.S.
- C6 FLAGSTONE @ PORCH, T.B.S
- C7 DIRECT VENT FIREPLACE, T.B.S. INSTALL PER MANUFACTURER REQUIREMENTS
- C8 FROST PROOF HOSE BIB BELOW; CONFIRM LOCATION
- C9 CONDENSOR UNIT LOCATION APPROXIMATE
- C10 WINDOW WELL BELOW; SEE DETAIL '10/A302'
- C11 FLAGSTONE TREADS, T.B.S., F.V. RISE/RUN
- C12 OPTIONAL TRAY CEILING ABOVE, SEE PLAN FOR HEIGHTS
- C13 PROVIDE GUARDRAIL TO COMPLY W/ IRC 2018
- C14 WD. STEPS; 1x RISERS W/ TREADS TO MATCH H.W.F.; WOOD RAILING T.B.S, SEE DETAILS '1,6/A3.2', FOLLOW IRC 2018 FOR STAIR AND RAILING
- C15 1/4" POLISHED PLATE GLASS MIRROR, T.B.S.
- C16 PROVIDE CLOSET ROD & SHELF
- C17 PLUMBING FIXTURES & ACCESSORIES T.B.S.
- C18 HARD-WIRED SMOKE DETECTOR/CARBON MONOXIDE COMBO UNIT PER IRC 2018
- C19 BUILT-IN BENCH W/ LOCKERS & HOOKS; SEE TYP DETAIL ON '5/A303'
- C20 DARKER TONED WALL INDICATES 2x6 LOAD BEARING WALL @ 16" O.C.
- C21 OPTIONAL BEAMS ABOVE, T.B.D.
- C22 STONE VENEER T.B.D.
- C23 CHASE FOR RETURN AIR
- C24 VANITY W/ SINK, FAUCET & COUNTERTOP; T.B.S.

NOTE:

1. UNLESS INDICATED OTHERWISE, DIMENSIONS ARE TO FACE OF FRAMING
2. VERIFY ALL EXTERIOR RISER + TREAD DIMENSIONS IN THE FIELD
3. SEE DETAILS '18-20/A304' FOR ENERGY EFFICIENT FRAMING DETAILS
4. PROVIDE MINERAL WOOL SOUND INSULATION IN WALLS, CEILING, + FLOOR OF THE FOLLOWING ROOMS (U.N.O.):

   110 POWDER ROOM

5. (T) = TEMPERED GLASS

WALL TYPES

TYPICAL NEW EXTERIOR WALL; 2x6 WOOD STUDS 16" O.C., W/ INSULATION (SEE THERMAL ENVELOPE, SHEET "EC001" FOR INSULATION LOCATION & INFORMATION) W/ , ½" EXTERIOR SHEATHING, AIR & WATER RESISTIVE BUILDING WRAP, & SIDING; SEE ELEVATIONS. INTERIOR FINISH TO BE ½" GYP. BD.

TYPICAL NON-BEARING INTERIOR PARTITION; U.N.O. 2x4 WOOD STUDS 16" O.C. W/ ½" GYP. BD. EACH SIDE, INCREASE WALL THICKNESS AS SHOWN TO ALIGN FINISHES WHERE SHOWN

GTM ARCHITECTS

7735 OLD GEORGETOWN ROAD
SUITE 700
BETHESDA, MD 20814
(240)333-2000
(240)333-2001 FAX
WWW.GTMARCHITECTS.COM

Seal

I certify that these documents were prepared or approved by me, and that I am a duly licensed architect under the laws of the State of Maryland, license number 8385, Expiration Date: 12/06/2022

Consultant

Project
19 HIGH ST
LOT 4

Owner

Developer

PERMIT SET	04/11/2022
Issue Description	Date

GTM Project No.	18.0320
Checked By	GTM
Drawn By	LEO/NW
Scale	AS NOTED

Sheet Title
FIRST FLOOR PLAN

Sheet No.
A101

COPYRIGHT, 2019 GTM ARCHITECTS, INC.

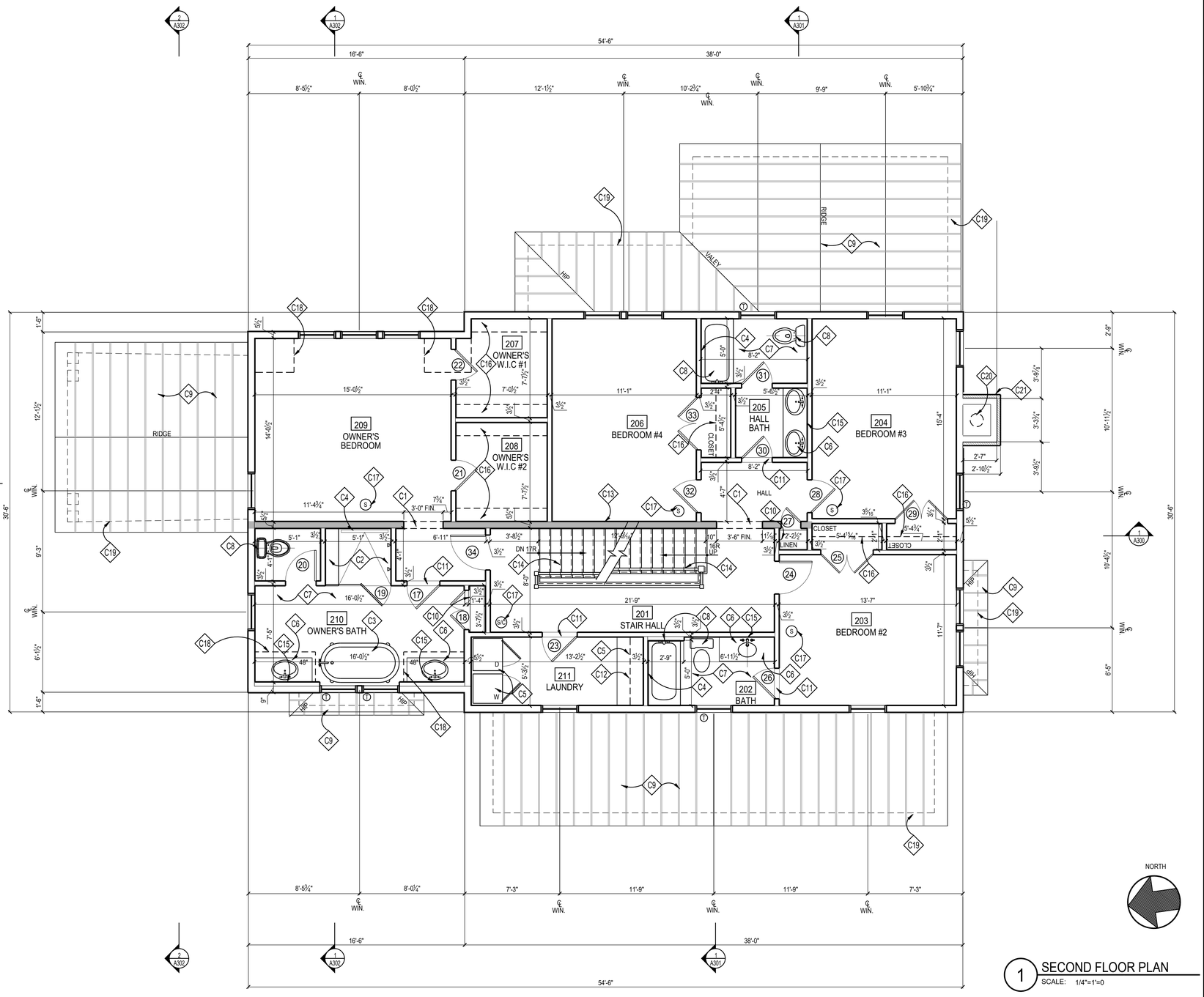

1 SECOND FLOOR PLAN

SCALE: 1/4"=1'=0

CONSTRUCTION NOTES

C1	CASED OPENING @ 7'-0" FINISHED
C2	TILED SHOWER AND TILED BENCH; REFER TO DETAIL '16,17/A302', W/ TEMPERED GLASS ENCLOSURE & DOOR
C3	SOAKING TUB WITHIN BUILT-IN DECK, T.B.S.
C4	12" W x 14" H TILED RECESS w/ SLOPED SILL @ 42" A.F.F.
C5	LAUNDRY ROOM CABINETS, APPLIANCES + COUNTER TOPS, ETC. T.B.S.; PROVIDE OVERFLOW PAN AND DRAIN UNDER WASHER
C6	VANITY W/ SINK, FAUCET & COUNTERTOP; T.B.S.
C7	TUB & SHOWER FLOORS AND WALLS SHALL BE FINISHED W/ A NON-ABSORBENT SURFACE AT LEAST 6" ABOVE THE FLOOR, PER IRC 2018
C8	PLUMBING FIXTURES & ACCESSORIES T.B.S.
C9	ROOF BELOW; SEE ROOF PLAN
C10	PROVIDE (5) EQUALLY SPACED SHELEVES, PTD.
C11	MARBLE THRESHOLD, T.B.S.; SEE DETAIL '5/A302'
C12	OPTIONAL LAUNDRY SINK, T.B.S.
C13	DARKER TONED WALL INDICATES 2x6 LOAD BEARING WALL @ 16" O.C.
C14	WD. STEPS; 1x RISERS W/ TREADS TO MATCH H.W.F.; WOOD RAILING T.B.S, SEE DETAILS '1,6/A302', FOLLOW IRC 2018 FOR STAIR AND RAILING
C15	1/4" POLISHED PLATE GLASS MIRROR, T.B.S.
C16	PROVIDE CLOSET ROD & SHELF
C17	HARD-WIRED SMOKE DETECTOR/CARBON MONOXIDE COMBO UNIT PER IRC 2018
C18	DASHED LINE OF SLOPED CEILING ABOVE
C19	DASHED LINE OF BEAM/WALL/COLUMN BELOW
C20	B-VENT DOUBLE WALL FLUE FOR PRE-FAB FIREPLACE BELOW, PROVIDE CHASE AND CLEARANCES PER MANUF. SPECS
C21	STONE VENEER T.B.D.

NOTE:

1. UNLESS INDICATED OTHERWISE, DIMENSIONS ARE TO FACE OF FRAMING
2. VERIFY ALL EXTERIOR RISER + TREAD DIMENSIONS IN THE FIELD
3. SEE DETAILS '18-20/A304' FOR ENERGY EFFICIENT FRAMING DETAILS
4. PROVIDE MINERAL WOOL SOUND INSULATION IN WALLS, CEILING, + FLOOR OF THE FOLLOWING ROOMS (U.N.O.):

202 BATH	210 OWNER'S BATH
209 OWNER'S BEDROOM	211 LAUNDRY
	205 HALL BATH

5. (T) = TEMPERED GLASS

WALL TYPES

TYPICAL NEW EXTERIOR WALL: 2x6 WOOD STUDS 16" O.C., W/ INSULATION (SEE THERMAL ENVELOPE, SHEET "EC001" FOR INSULATION LOCATION & INFORMATION) W/ ½" EXTERIOR SHEATHING, AIR & WATER RESISTIVE BUILDING WRAP, & SIDING; SEE ELEVATIONS. INTERIOR FINISH TO BE ½" GYP. BD.

TYPICAL NON-BEARING INTERIOR PARTITION: U.N.O. 2x4 WOOD STUDS 16" O.C. W/ ½" GYP. BD. EACH SIDE, INCREASE WALL THICKNESS AS SHOWN TO ALIGN FINISHES WHERE SHOWN

GTM ARCHITECTS

7735 OLD GEORGETOWN ROAD
SUITE 700
BETHESDA, MD 20814
(240)333-2000
(240)333-2001 FAX
WWW.GTMARCHITECTS.COM

Seal

I certify that these documents were prepared or approved by me, and that I am a duly licensed architect under the laws of the State of Maryland, license number 8886. Expiration Date: 12/06/2022

Consultant

Project

19 HIGH ST
LOT 4

Owner

Developer

Issue Description	Date
PERMIT SET	04/11/2022

GTM Project No.	18.0320
Checked By	GTM
Drawn By	LEO/NW
Scale	AS NOTED

Sheet Title

SECOND FLOOR PLAN

Sheet No.

A102

COPYRIGHT, 2019 GTM ARCHITECTS, INC.

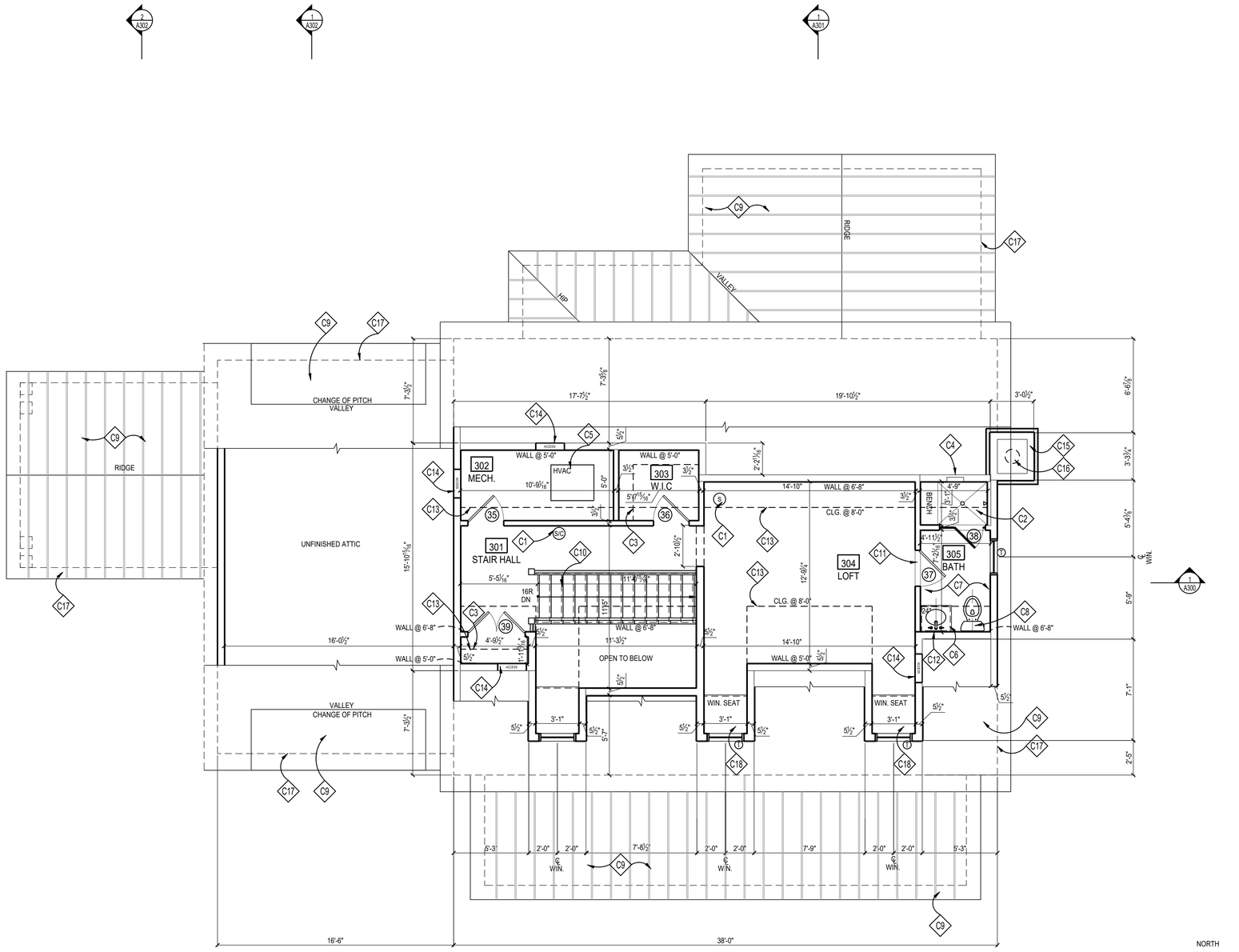

1 ATTIC PLAN
SCALE: 1/4"=1'=0

CONSTRUCTION NOTES

C1	HARD-WIRED SMOKE DETECTOR/CARBON MONOXIDE COMBO UNIT PER IRC 2018
C2	TILED SHOWER; REFER TO DETAIL '16,17/A302', W/ TEMPERED GLASS ENCLOSURE & DOOR
C3	PROVIDE CLOSET ROD & SHELF
C4	12" W x 14" H TILED RECESS w/ SLOPED SILL @ 42" A.F.F.
C5	HVAC, SEE SHEET '002'
C6	VANITY W/ SINK, FAUCET & COUNTERTOP; T.B.S.
C7	TUB & SHOWER FLOORS AND WALLS SHALL BE FINISHED W/ A NON-ABSORBENT SURFACE AT LEAST 6" ABOVE THE FLOOR, PER IRC 2018
C8	PLUMBING FIXTURES & ACCESSORIES T.B.S.
C9	ROOF BELOW; SEE ROOF PLAN
C10	WD. STEPS; 1x RISERS W/ TREADS TO MATCH H.W.F.; WOOD RAILING T.B.S, SEE DETAILS '1,6/A302', FOLLOW IRC 2018 FOR STAIR AND RAILING
C11	MARBLE THRESHOLD, T.B.S.; SEE DETAIL '5/A302'
C12	1/4" POLISHED PLATE GLASS MIRROR, T.B.S.
C13	SLOPED CEILING ABOVE
C14	PROVIDE ACCESS PANEL PER IRC 2018
C15	STONE VENEER T.B.D.
C16	CHIMNEY FLUE
C17	DASHED LINE OF BEAM/WALL/COLUMN BELOW
C18	BUILT-IN WINDOW SEAT, SEE DETAIL '1/A303'

NOTE:

1. UNLESS INDICATED OTHERWISE, DIMENSIONS ARE TO FACE OF FRAMING
2. VERIFY ALL EXTERIOR RISER + TREAD DIMENSIONS IN THE FIELD
3. SEE DETAILS '18-20/A304' FOR ENERGY EFFICIENT FRAMING DETAILS
4. PROVIDE MINERAL WOOL SOUND INSULATION IN WALLS, CEILING, + FLOOR OF THE FOLLOWING ROOMS (U.N.O.):

'302' MECHANICAL ROOM
'305' BATH

WALL TYPES

TYPICAL NEW EXTERIOR WALL: 2x6 WOOD STUDS 16" O.C., W/ INSULATION (SEE THERMAL ENVELOPE, SHEET "EC001" FOR INSULATION LOCATION & INFORMATION) W/ ,½" EXTERIOR SHEATHING, AIR & WATER RESISTIVE BUILDING WRAP, & SIDING; SEE ELEVATIONS. INTERIOR FINISH TO BE ½" GYP. BD.

TYPICAL NON-BEARING INTERIOR PARTITION: U.N.O. 2x4 WOOD STUDS 16" O.C. W/ ½" GYP. BD. EACH SIDE, INCREASE WALL THICKNESS AS SHOWN TO ALIGN FINISHES WHERE SHOWN

GTM ARCHITECTS

7735 OLD GEORGETOWN ROAD
SUITE 700
BETHESDA, MD 20814
(240)333-2000
(240)333-2001 FAX
WWW.GTMARCHITECTS.COM

Seal

Consultant

Project
19 HIGH ST
LOT 4

Owner

Developer

Issue Description	Date
PERMIT SET	04/11/2022

GTM Project No.	18.0320
Checked By	GTM
Drawn By	LEO/NW
Scale	AS NOTED

Sheet Title
ATTIC PLAN

Sheet No.
A103

COPYRIGHT, 2019 GTM ARCHITECTS, INC.

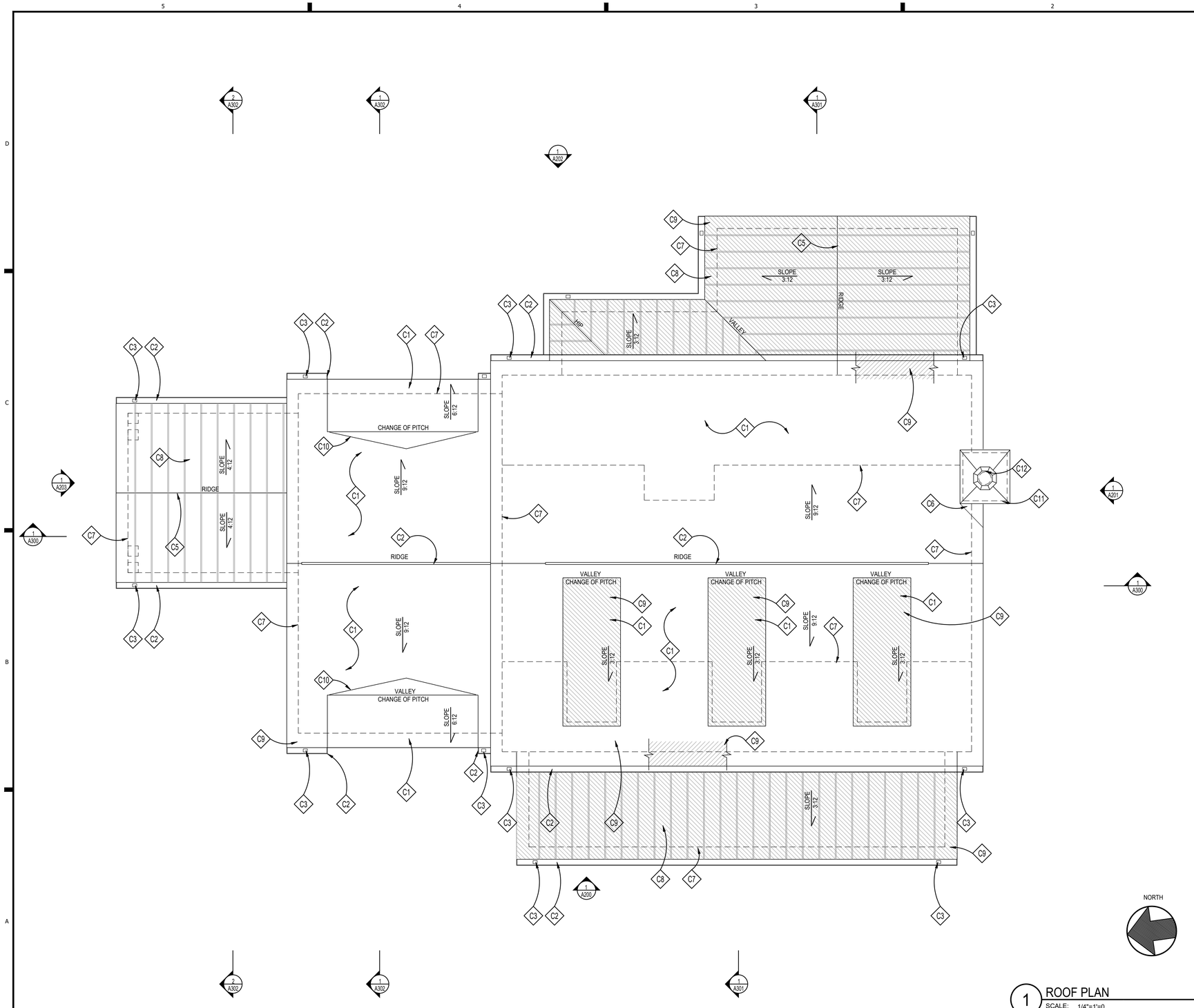

1 ROOF PLAN
SCALE: 1/4"=1'=0

CONSTRUCTION NOTES

C1	SINTHETIC ECO STAR MAJESTIC OR EQ. SLATE ROOF SHINGLES, COLOR AND STYLE T.B.S.
C2	PTD. ALUM. 6" HALF ROUND GUTTER T.B.S., TYP.
C3	PTD. ALUM. 4" ROUND DOWNSPOUT T.B.S., TYP.
C4	RIDGE/HIP VENTS BY COR-A-VENT OR APP'D EQUAL ELIMINATE WITH THE USE OF FOAM INSULATION
C5	RIDEGE VENT FOR METAL ROOF
C6	METAL CRICKET PER IRC. MIN 4:12 SLOPE
C7	LINE OF FRAME WALL BELOW, TYP.
C8	STANDING SEAM METAL ROOF BELOW, T.B.S.
C9	ICE AND WATER GUARD AT ALL EAVES, VALLEYS, AND LOW SLOPE ROOFS; SEE GENERAL NOTE 1 BELOW
C10	MTL. RAIN DIVERTER FLASHING, MATERIAL COLOR T.B.D.
C11	STONE VENEER T.B.D.
C12	WOOD-FRAME CHIMNEY WITH THIN'STONE VENEER CLADDING & SLOPED STONE CHIMNEY CAP ABOVE, T.B.S.

LEGEND

LOW SLOPE ROOF,
PROVIDE ICE & WEATHER GUARD

GENERAL ROOFING NOTES

1. PROVIDE SELF-ADHERING, 40 MIL ICE AND WATER GUARD UNDERLAYMENT UNDER SHINGLES AT ALL VALLEYS AND FROM LOWEST EDGE OF ROOF SURFACES TO A POINT AT LEAST 24" INSIDE THE EXTERIOR WALL LINE, AND ON ALL AREAS WITH A SLOPE LESS THAN 4:12.
2. SEE FRAMING PLAN FOR OVERBUILD AREAS
3. DOTTED LINE INDICATES LINE OF BUILDING BELOW

GTM ARCHITECTS

7735 OLD GEORGETOWN ROAD
SUITE 700
BETHESDA, MD 20814
(240)333-2000
(240)333-2001 FAX
WWW.GTMARCHITECTS.COM

Seal

I certify that these documents were prepared or approved by me, and that I am a duly licensed architect under the laws of the State of Maryland, license number 8886. Expiration Date: 12/06/2022

Consultant

Project
19 HIGH ST
LOT 4

Owner

Developer

Issue Description	Date
PERMIT SET	04/11/2022

GTM Project No.	18.0320
Checked By	GTM
Drawn By	LEO/NW
Scale	AS NOTED

Sheet Title
ROOF PLAN

Sheet No.
A104

COPYRIGHT, 2019 GTM ARCHITECTS, INC.

FILE NAME:

1 FRONT ELEVATION
SCALE: 1/4"=1'=0

ELEVATION NOTES

- E1 RIDGE VENTS BY COR-A-VENT OR APPROVED EQUAL, TYP.; REMOVE IF USING SPRAY FOAM INSULATION, SEE DETAILS '12 & 19/A302'
- E2 SYNTHETIC ECO STAR MAJESTIC OR EQ. SLATE ROOF; T.B.S., SEE ROOF PLAN
- E3 HALF ROUND GUTTER (ON 1x6 PTD. FASCIA BD.) & DOWNSPOUT, T.B.S.
- E4 PTD. HARDIPLANK SMOOTH LAP SIDING W/ MITERED CORNERS, 7" EXPOSURE, INSTALL PER MANUFACTURER
- E5 PTD. WOOD 5/4x6 WINDOW/DOOR TRIM W/ WM-6930 HISTORIC SILL, TYP.; SEE TRIM NOTES, THIS SHEET
- E6 STANDING SEAM METAL ROOF, T.B.S.
- E7 OPERABLE SOLID-CORE WOOD SHUTTERS & HARDWARE, T.B.S., SEE DETAIL '15/A303'
- E8 SLOPED STONE CAP
- E9 SQUARE COLUMN, BUILT UP FROM 2x10's, PTD. (WRAP 6x6 POST) OR 10" SQ. HB&G PERMACAST COLUMN CUT FROM 9'-0" STOCK W/ TUSCAN BASE AND CAPITAL
- E10 FLAGSTONE PORCH/STOOP W/ NATURAL STONE VENEER BASE
- E11 CONCEALED ALUM. FLASHING & COUNTER FLASHING @ ALL VERTICAL TRANSITIONS, TYP. EXTEND MIN. 8" BEHIND SIDING
- E12 THINSTONE VENEER T.B.S., INSTALL PER MANUF SPECS USING LATICRETE MASONRY VENEER INSTALLATION SYSTEM OR EQ.
- E13 PTD. 1x6 FASCIA BD. W/ WM-47 CROWN, SEE DETAIL '18/A302'
- E14 PTD. CEMENT STUCCO FINISH, SEE SHEET 002 FOR ADD'L INFORMATION
- E15 RIDGE VENT FOR METAL ROOF SEE DETAIL
- E16 ZALESKI MODEL 4 SNOW GUARDS OR EQ., TYP.; INSTALL PER MANUFAC. 2 OR 3 ROWS
- E17 PTD. FRONT PORCH EAVE SEE DETAIL '19/A305; ALIGN W/ TOP OF WINDOWS AND PORCH COLUMNS; SEE NOTES
- E18 PTD. WOOD DORMER ROOF EAVE, SEE DETAIL '2/A305' & SEE NOTES
- E19 PAINT GRADE FRONT DOOR T.B.S.
- E20 PTD. WOOD PANEL W/ RECESS AND BASE CAP, SEE DETAIL '17/A304'
- E21 PTD. WOOD UPPER MAIN ROOF EAVE, SEE DETAIL '17/A305' & SEE GENERAL NOTES
- E22 PTD. WOOD LOWER MAIN ROOF EAVE, SEE DETAIL '16/A305' & SEE GENERAL NOTES
- E23 MTL. RAIN DIFFUSER FLASHING, MATERIAL COLOR T.B.D.
- E24 CHIMNEY CAP T.B.S.; SEE DETAIL 12/A303
- E25 STONE VENEER CHIMNEY
- E26 PTD. WOOD GAURDRAIL PER IRC 2018

NOTE:

1. VERIFY ALL EXTERIOR RISER & TREAD DIMENSIONS IN FIELD
2. ALL EXTERIOR WOOD TRIM TO BE TREATED FOR PROTECTION AGAINST MOISTURE, ROT, FUNGAL ATTACK & INSECTS, WINDSOR-ONE+, LIFESPAN OR EQ.
3. (T) = TEMPERED GLASS
   (E) = EGRESS

GTM ARCHITECTS

7735 OLD GEORGETOWN ROAD
SUITE 700
BETHESDA, MD 20814
(240)333-2000
(240)333-2001 FAX
WWW.GTMARCHITECTS.COM

Seal

I certify that these documents were prepared or approved by me, and that I am a duly licensed architect under the laws of the State of Maryland, license number 8886. Expiration Date: 12/06/2022

Consultant

Project
19 HIGH ST
LOT 4

Owner

Developer

Issue Description	Date
PERMIT SET	04/11/2022

GTM Project No.	18.0320
Checked By	GTM
Drawn By	LEO/NW
Scale	AS NOTED

Sheet Title
FRONT ELEVATION

Sheet No.
A200

COPYRIGHT, 2019 GTM ARCHITECTS, INC.

FILE NAME:

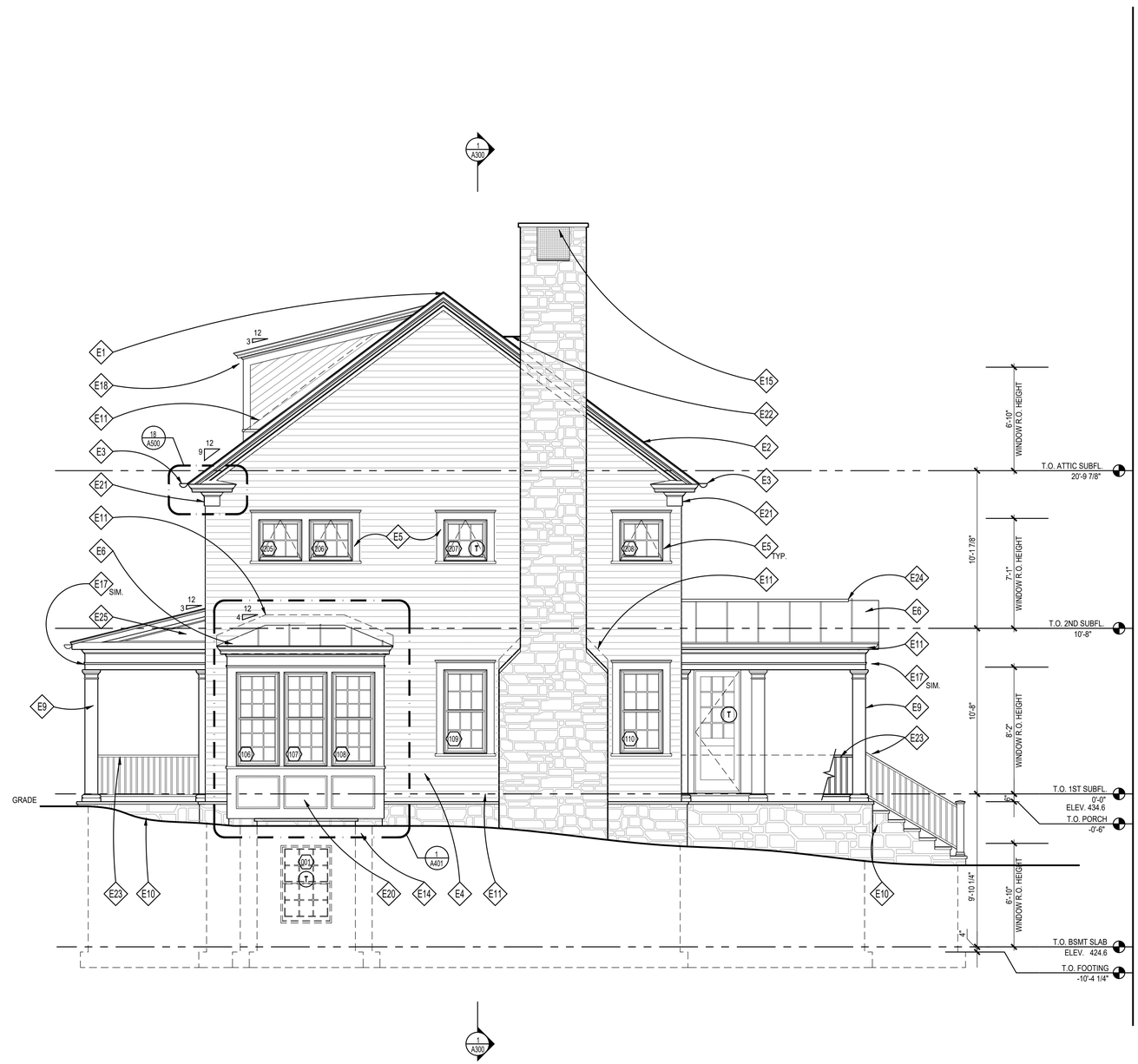

1 RIGHT SIDE ELEVATION
SCALE: 1/4"=1'=0

ELEVATION NOTES

- E1 RIDGE VENTS BY COR-A-VENT OR APPROVED EQUAL, TYP.; REMOVE IF USING SPRAY FOAM INSULATION, SEE DETAILS '12 & 19/A302'
- E2 SYNTHETIC ECO STAR MAJESTIC SLATE ROOF; T.B.S., SEE ROOF PLAN
- E3 HALF ROUND GUTTER (ON 1x6 PTD. FASCIA BD.) & DOWNSPOUT, T.B.S.
- E4 PTD. HARDIPLANK SMOOTH LAP SIDING W/ MITERED CORNERS, 7" EXPOSURE, INSTALL PER MANUFACTURER
- E5 PTD. WOOD 5/4x6 WINDOW/DOOR TRIM W/ WM-6930 HISTORIC SILL, TYP.; SEE TRIM NOTES, THIS SHEET
- E6 STANDING SEAM METAL ROOF, T.B.S.
- E7 OPERABLE SOLID-CORE WOOD SHUTTERS & HARDWARE, T.B.S., SEE DETAIL '15/A303'
- E8 PTD. 5/4x TRIM BAND W/ WM-47 & WM-287; CUT TO FIT, ALIGN W/ TOP OF WINDOWS/DOORS AND PORCH COLUMNS
- E9 SQUARE COLUMN, BUILT UP FROM 2x10's, PTD. (WRAP 6x6 POST) OR 10" SQ. HB&G PERMACAST COLUMN CUT FROM 9'-0" STOCK W/ TUSCAN BASE AND CAPITAL
- E10 FLAGSTONE PORCH/STOOP W/ NATURAL STONE VENEER BASE
- E11 CONCEALED ALUM. FLASHING & COUNTER FLASHING @ ALL VERTICAL TRANSITIONS, TYP. EXTEND MIN. 8" BEHIND SIDING
- E12 THINSTONE VENEER T.B.S., INSTALL PER MANUF SPECS USING LATICRETE MASONRY VENEER INSTALLATION SYSTEM OR EQ.
- E13 PTD. 1x6 FASCIA BD. W/ WM-47 CROWN, SEE DETAIL '18/A302'
- E14 PTD. CEMENT STUCCO FINISH, SEE SHEET 002 FOR ADD'L INFORMATION
- E15 CHIMNEY CAP T.B.S.; SEE DETAIL 12/A303
- E16 ZALESKI MODEL 4 SNOW GUARDS OR EQ., TYP.; INSTALL PER MANUFAC.
- E17 PTD. FRONT PORCH EAVE SEE DETAIL '19/A305; ALIGN W/ TOP OF WINDOWS AND PORCH COLUMNS; SEE NOTES
- E18 PTD. WOOD DORMER ROOF EAVE, SEE DETAIL '2/A305' & SEE NOTES
- E19 PAINT GRADE FRONT DOOR T.B.S.
- E20 PTD. WOOD PANEL W/ RECESS AND BASE CAP, SEE DETAIL '17/A304'
- E21 PTD. WOOD UPPER MAIN ROOF EAVE, SEE DETAIL '17/A305' & SEE GENERAL NOTES
- E22 MTL. CRICKET
- E23 PTD. WOOD GAURDRAIL PER IRC 2018
- E24 RIDGE VENT FOR METAL ROOF, SEE DETAIL
- E25 PTD. 1/4" WOOD PANEL, SEE DETAIL

NOTE:

1. VERIFY ALL EXTERIOR RISER & TREAD DIMENSIONS IN FIELD
2. ALL EXTERIOR WOOD TRIM TO BE TREATED FOR PROTECTION AGAINST MOISTURE, ROT, FUNGAL ATTACK & INSECTS, WINDSOR-ONE+, LIFESPAN OR EQ.
3. (T) = TEMPERED GLASS
   (E) = EGRESS

GTM ARCHITECTS

7735 OLD GEORGETOWN ROAD
SUITE 700
BETHESDA, MD 20814
(240)333-2000
(240)333-2001 FAX
WWW.GTMARCHITECTS.COM

Seal

STATE OF MARYLAND
LEO E. OSTROW
No. 18320
ARCHITECT

I certify that these documents were prepared or approved by me, and that I am a duly licensed architect under the laws of the State of Maryland, license number 18320, Expiration Date: 12/06/2022.

Consultant

Project
19 HIGH ST
LOT 4

Owner

Developer

Issue Description	Date
PERMIT SET	04/11/2022

GTM Project No.	18.0320
Checked By	GTM
Drawn By	LEO/NW
Scale	AS NOTED

Sheet Title
RIGHT SIDE ELEVATION

Sheet No.
A201

COPYRIGHT, 2019 GTM ARCHITECTS, INC.

FILE NAME:

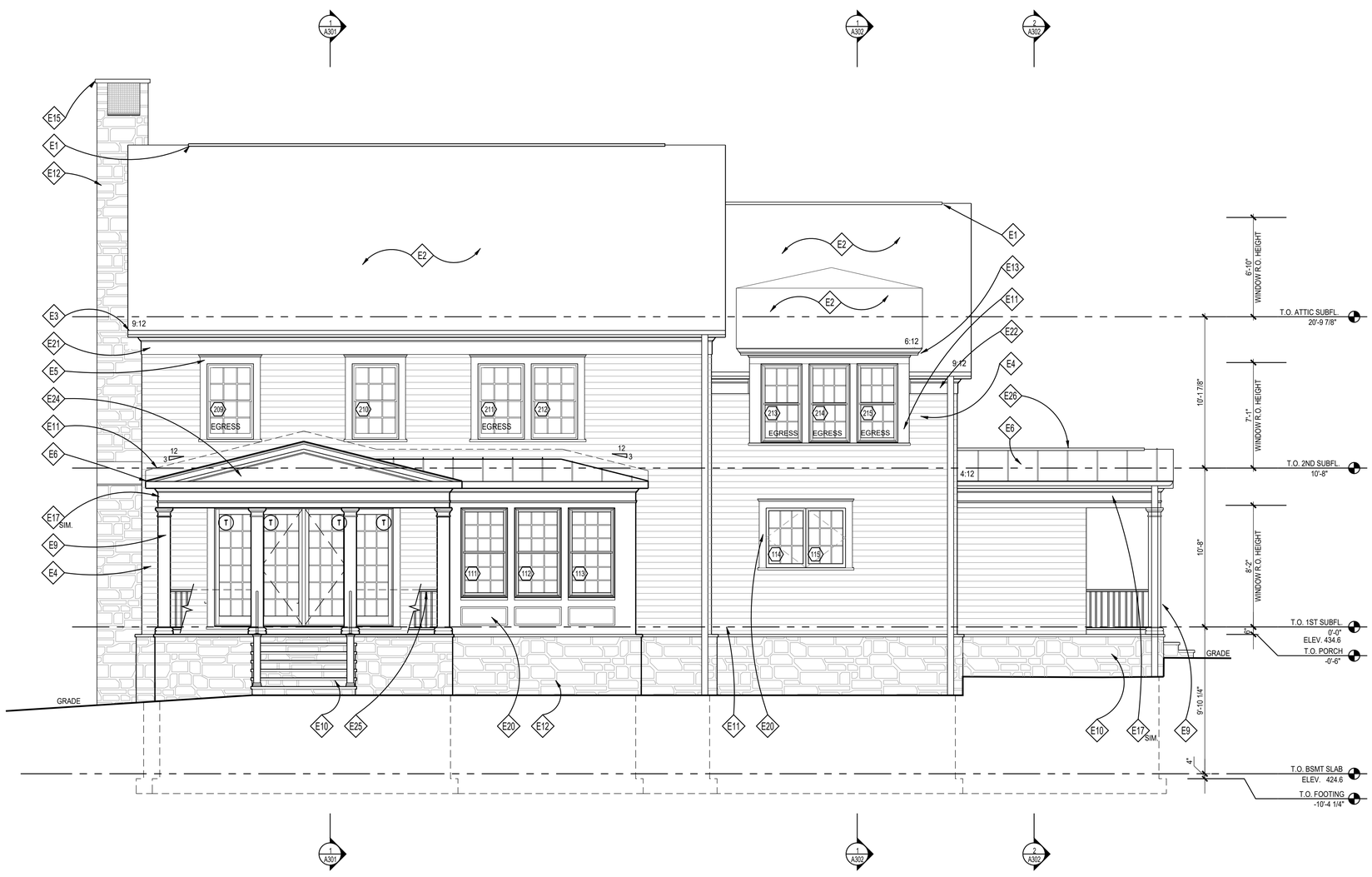

1 REAR ELEVATION
SCALE: 1/4"=1'=0

ELEVATION NOTES

- E1 RIDGE VENTS BY COR-A-VENT OR APPROVED EQUAL, TYP.; REMOVE IF USING SPRAY FOAM INSULATION, SEE DETAILS '12 & 19/A302'
- E2 SLATE ROOF; T.B.S., SEE ROOF PLAN
- E3 HALF ROUND GUTTER (ON 1x6 PTD. FASCIA BD.) & DOWNSPOUT, T.B.S.
- E4 PTD. HARDIPLANK SMOOTH LAP SIDING W/ MITERED CORNERS, 7" EXPOSURE, INSTALL PER MANUFACTURER
- E5 PTD. WOOD 5/4x6 WINDOW/DOOR TRIM W/ WM-6930 HISTORIC SILL, TYP.; SEE TRIM NOTES, THIS SHEET
- E6 STANDING SEAM METAL ROOF, T.B.S.
- E7 OPERABLE SOLID-CORE WOOD SHUTTERS & HARDWARE, T.B.S., SEE DETAIL '15/A303'
- E8 PTD. 5/4x TRIM BAND W/ WM-47 & WM-287; CUT TO FIT, ALIGN W/ TOP OF WINDOWS/DOORS AND PORCH COLUMNS
- E9 SQUARE COLUMN, BUILT UP FROM 2x10's, PTD. (WRAP 6x6 POST) OR 10" SQ. HB&G PERMACAST COLUMN CUT FROM 9'-0" STOCK W/ TUSCAN BASE AND CAPITAL
- E10 FLAGSTONE PORCH/STOOP W/ NATURAL STONE VENEER BASE
- E11 CONCEALED ALUM. FLASHING & COUNTER FLASHING @ ALL VERTICAL TRANSITIONS, TYP. EXTEND MIN. 8" BEHIND SIDING
- E12 THINSTONE VENEER T.B.S., INSTALL PER MANUF SPECS USING LATICRETE MASONRY VENEER INSTALLATION SYSTEM OR EQ.
- E13 PTD. 1x6 FASCIA BD. W/ WM-47 CROWN, SEE DETAIL '18/A302'
- E14 PTD. CEMENT STUCCO FINISH, SEE SHEET 002 FOR ADD'L INFORMATION
- E15 CHIMNEY CAP T.B.S.; SEE DETAIL 12/A303
- E16 ZALESKI MODEL 4 SNOW GUARDS OR EQ., TYP.; INSTALL PER MANUFAC.
- E17 PTD. FRONT PORCH EAVE SEE DETAIL '19/A305; ALIGN W/ TOP OF WINDOWS AND PORCH COLUMNS; SEE NOTES
- E18 PTD. WOOD DORMER ROOF EAVE, SEE DETAIL '2/A305' & SEE NOTES
- E19 PAINT GRADE FRONT DOOR T.B.S.
- E20 PTD. WOOD PANEL W/ RECESS AND BASE CAP, SEE DETAIL '17/A304'
- E21 PTD. WOOD UPPER MAIN ROOF EAVE, SEE DETAIL '17/A305' & SEE GENERAL NOTES
- E22 PTD. WOOD LOWER MAIN ROOF EAVE, SEE DETAIL '16/A305' & SEE GENERAL NOTES
- E23 PTD. WOOD LOWER MAIN ROOF EAVE, SEE DETAIL '16/A305' & SEE GENERAL NOTES
- E24 PTD. 1/4" WOOD PANEL, SEE DETAIL
- E25 PTD. WOOD GAURDRAIL PER IRC 2018
- E26 RIDGE VENT FOR METAL ROOF, SEE DETAIL

NOTE:

1. VERIFY ALL EXTERIOR RISER & TREAD DIMENSIONS IN FIELD
2. ALL EXTERIOR WOOD TRIM TO BE TREATED FOR PROTECTION AGAINST MOISTURE, ROT, FUNGAL ATTACK & INSECTS, WINDSOR-ONE+, LIFESPAN OR EQ.
3. (T) = TEMPERED GLASS
   (E) = EGRESS

GTM ARCHITECTS

7735 OLD GEORGETOWN ROAD
SUITE 700
BETHESDA, MD 20814
(240)333-2000
(240)333-2001 FAX
WWW.GTMARCHITECTS.COM

Seal

I certify that these documents were prepared or approved by me, and that I am a duly licensed architect under the laws of the State of Maryland, license number 8886. Expiration Date: 12/06/2022

Consultant

Project
19 HIGH ST
LOT 4

Owner

Developer

Issue Description	Date
PERMIT SET	04/11/2022

GTM Project No.	18.0320
Checked By	GTM
Drawn By	LEO/NW
Scale	AS NOTED

Sheet Title
REAR ELEVATION

Sheet No.
A202

COPYRIGHT, 2019 GTM ARCHITECTS, INC.

FILE NAME:

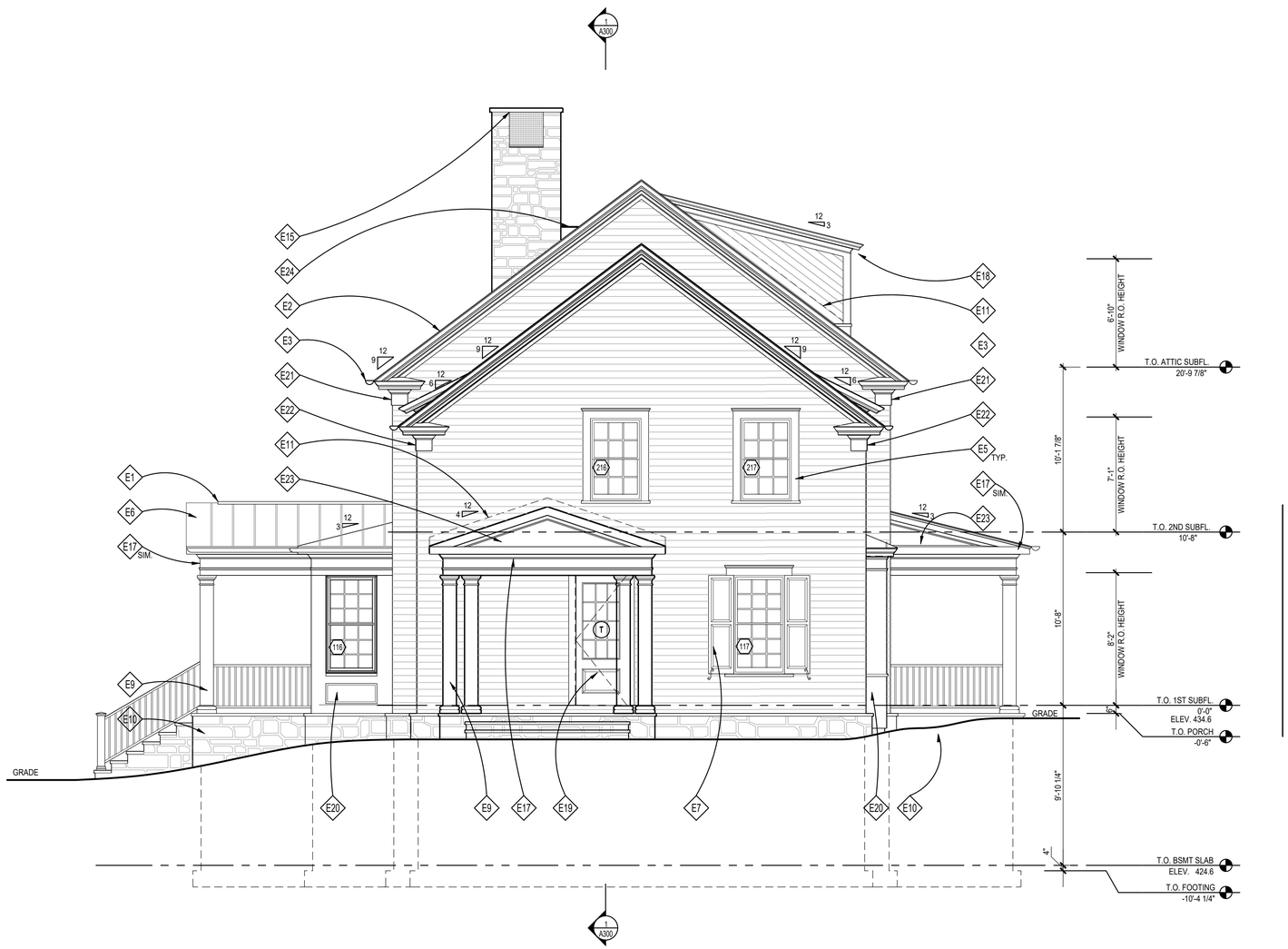

1 LEFT SIDE ELEVATION
SCALE: 1/4"=1'=0

ELEVATION NOTES

- E1 RIDGE VENTS BY COR-A-VENT OR APPROVED EQUAL, TYP.; REMOVE IF USING SPRAY FOAM INSULATION, SEE DETAILS '12 & 19/A302'
- E2 SLATE ROOF; T.B.S., SEE ROOF PLAN
- E3 HALF ROUND GUTTER (ON 1x6 PTD. FASCIA BD.) & DOWNSPOUT, T.B.S.
- E4 PTD. HARDIPLANK SMOOTH LAP SIDING W/ MITERED CORNERS, 7" EXPOSURE, INSTALL PER MANUFACTURER
- E5 PTD. WOOD 5/4x6 WINDOW/DOOR TRIM W/ WM-6930 HISTORIC SILL, TYP.; SEE TRIM NOTES, THIS SHEET
- E6 STANDING SEAM METAL ROOF, T.B.S.
- E7 OPERABLE SOLID-CORE WOOD SHUTTERS & HARDWARE, T.B.S., SEE DETAIL '15/A303'
- E8 PTD. 5/4x TRIM BAND W/ WM-47 & WM-287; CUT TO FIT, ALIGN W/ TOP OF WINDOWS/DOORS AND PORCH COLUMNS
- E9 SQUARE COLUMN, BUILT UP FROM 2x10's, PTD. (WRAP 6x6 POST) OR 10" SQ. HB&G PERMACAST COLUMN CUT FROM 9'-0" STOCK W/ TUSCAN BASE AND CAPITAL
- E10 FLAGSTONE PORCH/STOOP W/ NATURAL STONE VENEER BASE
- E11 CONCEALED ALUM. FLASHING & COUNTER FLASHING @ ALL VERTICAL TRANSITIONS, TYP. EXTEND MIN. 8" BEHIND SIDING
- E12 THINSTONE VENEER T.B.S., INSTALL PER MANUF SPECS USING LATICRETE MASONRY VENEER INSTALLATION SYSTEM OR EQ.
- E13 PTD. 1x6 FASCIA BD. W/ WM-47 CROWN, SEE DETAIL '18/A302'
- E14 PTD. CEMENT STUCCO FINISH, SEE SHEET 002 FOR ADD'L INFORMATION
- E15 CHIMNEY CAP T.B.S.; SEE DETAIL 12/A303
- E16 ZALESKI MODEL 4 SNOW GUARDS OR EQ., TYP.; INSTALL PER MANUFAC.
- E17 PTD. FRONT PORCH EAVE SEE DETAIL '19/A305; ALIGN W/ TOP OF WINDOWS AND PORCH COLUMNS; SEE NOTES
- E18 PTD. WOOD DORMER ROOF EAVE, SEE DETAIL '2/A305' & SEE NOTES
- E19 PAINT GRADE FRONT DOOR T.B.S.
- E20 PTD. WOOD PANEL W/ RECESS AND BASE CAP, SEE DETAIL '17/A304'
- E21 PTD. WOOD UPPER MAIN ROOF EAVE, SEE DETAIL '17/A305' & SEE GENERAL NOTES
- E22 PTD. WOOD LOWER MAIN ROOF EAVE, SEE DETAIL '16/A305' & SEE GENERAL NOTES
- E23 PTD. 1/4" WOOD PANEL, SEE DETAIL
- E24 MTL. CRICKET

NOTE:

1. VERIFY ALL EXTERIOR RISER & TREAD DIMENSIONS IN FIELD
2. ALL EXTERIOR WOOD TRIM TO BE TREATED FOR PROTECTION AGAINST MOISTURE, ROT, FUNGAL ATTACK & INSECTS, WINDSOR-ONE+, LIFESPAN OR EQ.
3. (T) = TEMPERED GLASS
   (E) = EGRESS

GTM ARCHITECTS

7735 OLD GEORGETOWN ROAD
SUITE 700
BETHESDA, MD 20814
(240)333-2000
(240)333-2001 FAX
WWW.GTMARCHITECTS.COM

Seal

I certify that these documents were prepared or approved by me, and that I am a duly licensed architect under the laws of the State of Maryland, license number 8886. Expiration Date: 12/06/2022

Consultant

Project
19 HIGH ST
LOT 4

Owner

Developer

Issue Description	Date
PERMIT SET	04/11/2022

GTM Project No.	18.0320
Checked By	GTM
Drawn By	LEO/NW
Scale	AS NOTED

Sheet Title
LEFT SIDE ELEVATION

Sheet No.
A203

COPYRIGHT, 2019 GTM ARCHITECTS, INC.

FILE NAME:

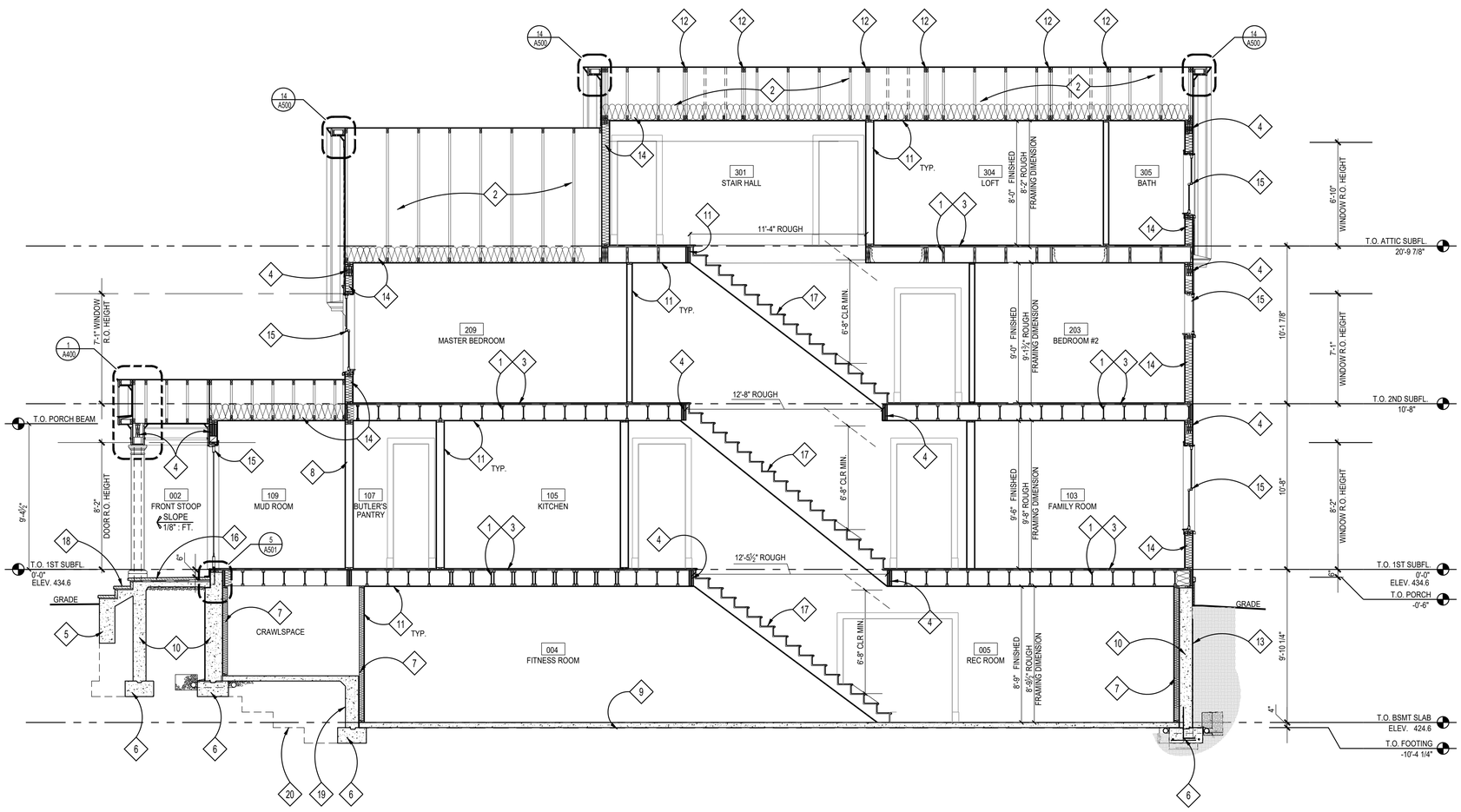

1 BUILDING SECTION
SCALE: 1/4"=1'=0

SECTION NOTES

1. FLOOR JOISTS; SEE FRAMING PLANS
2. ROOF TRUSSES BY TRUSS MANUFACTURER; SEE FRAMING PLANS
3. 3/4" ADVANTECH SUBFLOOR; GLUED & SCREWED
4. BEAM/ LINTEL/ HEADER; SEE FRAMING PLANS
5. GRADE BEAM SUPPORTED BY CONC. WING WALL, SEE FOUNDATION PLAN
6. FOOTING; SEE FOUNDATION PLAN
7. FUR OUT BASEMENT WALLS W/ 2x4's @ 16" O.C. & R-13 BATT INSULATION, TYP.
8. 2X6 LOAD BEARING WALL, SEE FRAMING PLANS
9. REINF. CONC. SLAB; SEE FOUNDATION PLAN
10. CONCRETE FOUNDATION WALL; SEE FOUNDATION PLAN
11. 1/2" GYP. BD
12. GIRDER TRUSS BY TRUSS MANUFACTURER; SEE FRAMING PLANS
13. WATERPROOFING AND DRAINAGE BD TO GRADE
14. INSULATION, SEE THERMAL ENVELOPE SHEET EC001
15. SCHEDULED WINDOW/DOOR
16. FLAGSTONE; T.B.S, ON 1" SETTING BED ON STRUCTURAL CONC. SLAB, SEE STRUCTURAL DRAWINGS.
17. STAIRCASE & RAILING; TREADS & RISERS, MATCH H.W.F., T.B.S., SEE DETAILS 1, 6, 7, 8, 12 & 13 /A501, FOLLOW IRC 2018, RAILING T.B.S.
18. STEPS W/ THINSTONE VENEER RISERS & FLAGSTONE TREADS TO GRADE, FIELD VERIFY RISE/RUN
19. TURNDOWN SLAB, SEE STRUCTURAL DETAILS
20. DASHED LINE INDICATES STEPPED FOOTING BEYOND, SEE FOUNDATION PLAN, EXTEND FOOTERS DOWN TO SUITABLE SOILS

NOTE:

1. VERIFY ALL EXTERIOR RISER & TREAD DIMENSIONS IN FIELD
2. ALL EXTERIOR WOOD TRIM TO BE TREATED FOR PROTECTION AGAINST MOISTURE, ROT, FUNGAL ATTACK & INSECTS, WINDSOR-ONE+, LIFESPAN OR EQ.
3. (T) = TEMPERED GLASS
   (E) = EGRESS

GTM ARCHITECTS

7735 OLD GEORGETOWN ROAD
SUITE 700
BETHESDA, MD 20814
(240)333-2000
(240)333-2001 FAX
WWW.GTMARCHITECTS.COM

Seal

I certify that these documents were prepared or approved by me, and that I am a duly licensed architect under the laws of the State of Maryland, license number 8385, Expiration Date: 12-06-2022

Consultant

Project
19 HIGH ST
LOT 4

Owner

Developer

PERMIT SET	04/11/2022
Issue Description	Date

GTM Project No.	18.0320
Checked By	GTM
Drawn By	LEO/NW
Scale	AS NOTED

Sheet Title
BUILDING SECTION

Sheet No.
A300

COPYRIGHT, 2019 GTM ARCHITECTS, INC.

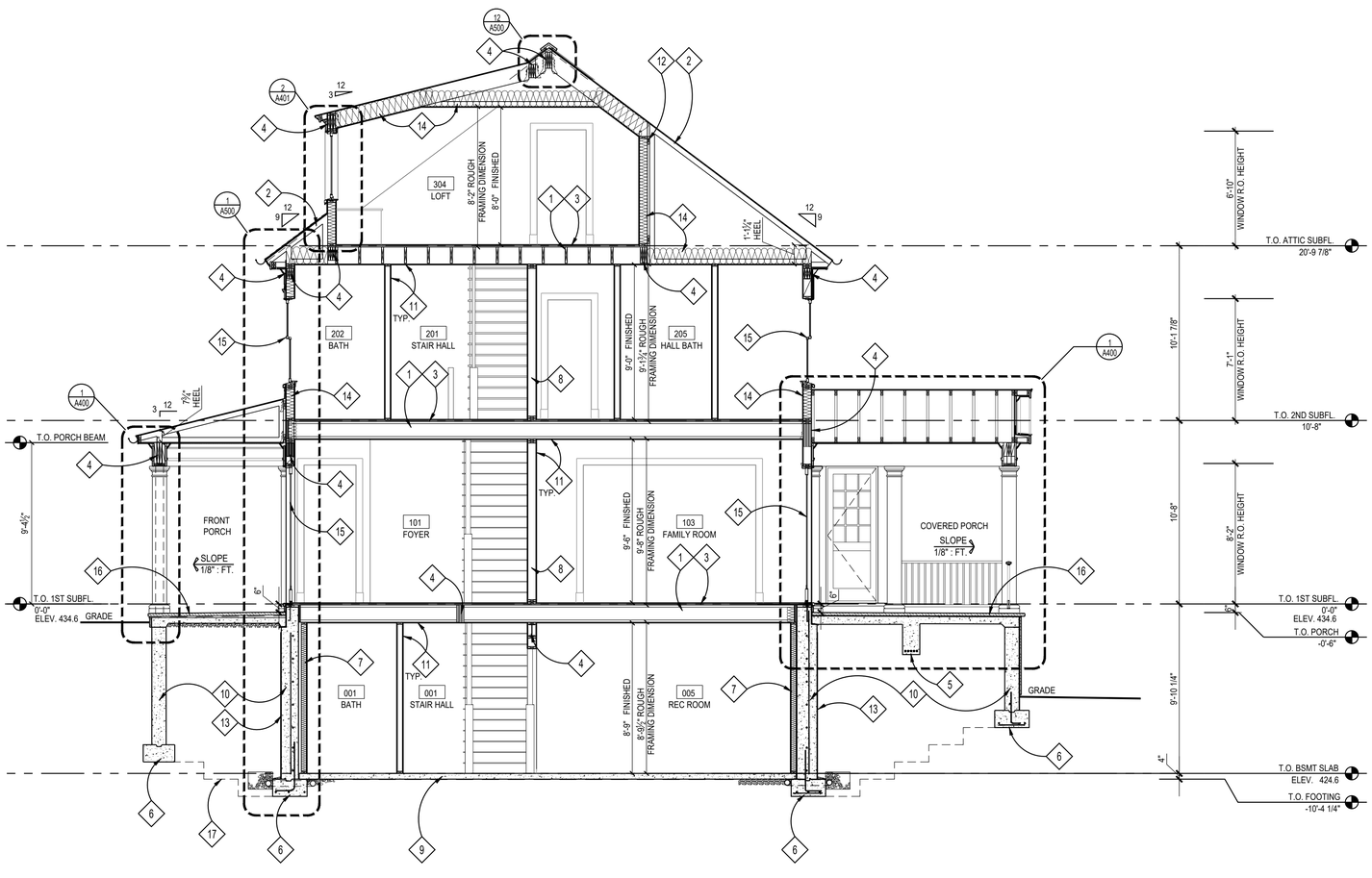

1 BUILDING SECTION
SCALE: 1/4"=1'=0

SECTION NOTES

1. FLOOR JOISTS; SEE FRAMING PLANS
2. ROOF TRUSSES BY TRUSS MANUFACTURER; SEE FRAMING PLANS
3. 3/4" ADVANTECH SUBFLOOR; GLUED & SCREWED
4. BEAM/ LINTEL/ HEADER; SEE FRAMING PLANS
5. GRADE BEAM, SEE FOUNDATION PLAN
6. FOOTING; SEE FOUNDATION PLAN
7. FUR OUT BASEMENT WALLS W/ 2x4's @ 16" O.C. & R-13 BATT INSULATION, TYP.
8. 2X6 LOAD BEARING WALL, SEE FRAMING PLANS
9. REINF. CONC. SLAB; SEE FOUNDATION PLAN
10. CONCRETE FOUNDATION WALL; SEE FOUNDATION PLAN
11. 1/2" GYP. BD
12. GIRDER TRUSS BY TRUSS MANUFACTURER; SEE FRAMING PLANS
13. WATERPROOFING AND DRAINAGE BD TO GRADE
14. INSULATION, SEE THERMAL ENVELOPE SHEET EC001
15. SCHEDULED WINDOW/DOOR
16. FLAGSTONE; T.B.S. ON 1" SETTING BED ON STRUCTURAL CONC. SLAB, SEE STRUCTURAL DRAWINGS.
17. DASHED LINE INDICATES STEPPED FOOTING BEYOND, SEE FOUNDATION PLAN; EXTEND FOOTERS DOWN TO SUITABLE SOILS

NOTE:

1. VERIFY ALL EXTERIOR RISER & TREAD DIMENSIONS IN FIELD
2. ALL EXTERIOR WOOD TRIM TO BE TREATED FOR PROTECTION AGAINST MOISTURE, ROT, FUNGAL ATTACK & INSECTS, WINDSOR-ONE+, LIFESPAN OR EQ.
3. (T) = TEMPERED GLASS
   (E) = EGRESS

GTM ARCHITECTS

7735 OLD GEORGETOWN ROAD
SUITE 700
BETHESDA, MD 20814
(240)333-2000
(240)333-2001 FAX
WWW.GTMARCHITECTS.COM

Seal

Consultant

Project
19 HIGH ST
LOT 4

Owner

Developer

Issue Description	Date
PERMIT SET	04/11/2022

GTM Project No.	18.0320
Checked By	GTM
Drawn By	LEO/NW
Scale	AS NOTED

Sheet Title
BUILDING SECTION

Sheet No.
A301

COPYRIGHT, 2019 GTM ARCHITECTS, INC.

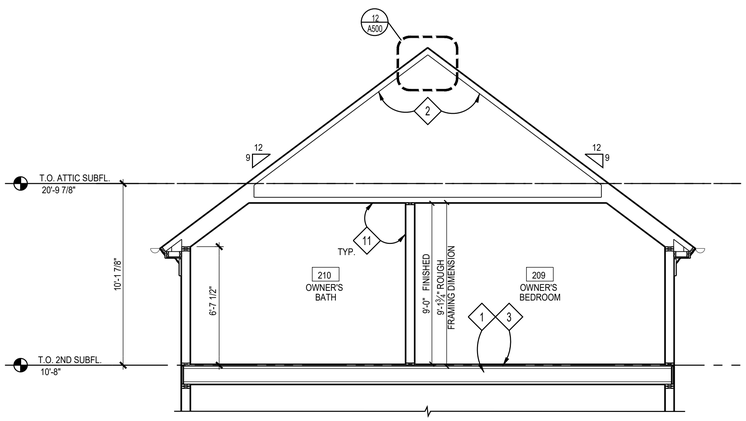

3 TRUSS PROFILE AT OWNER'S SUITE
SCALE: 1/4"=1'=0

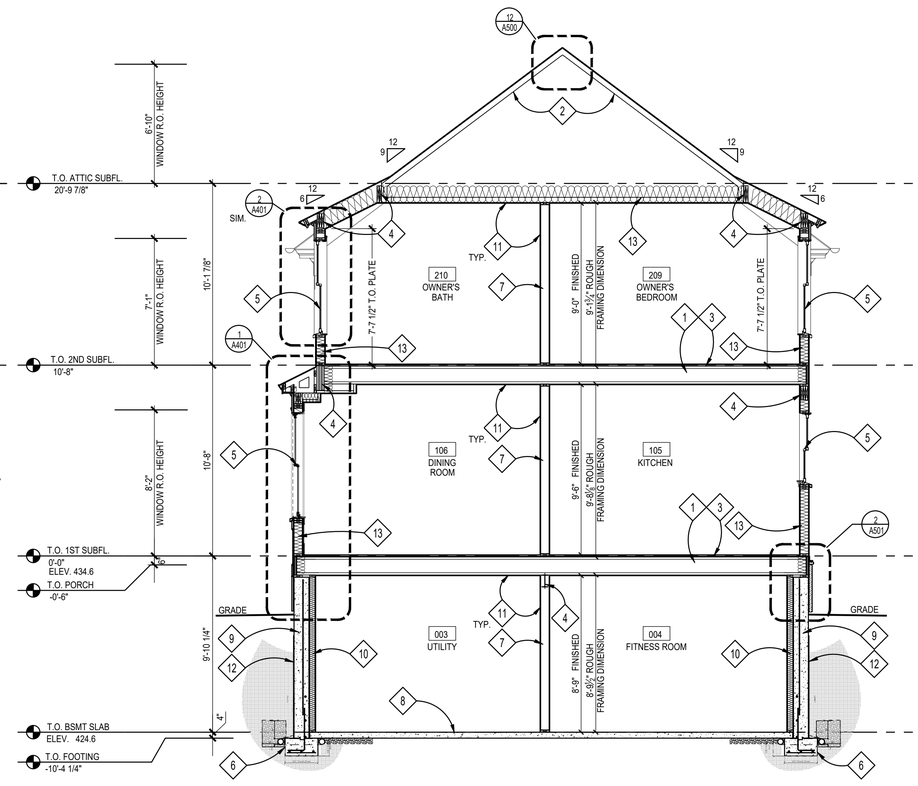

1 BUILDING SECTION
SCALE: 1/4"=1'=0

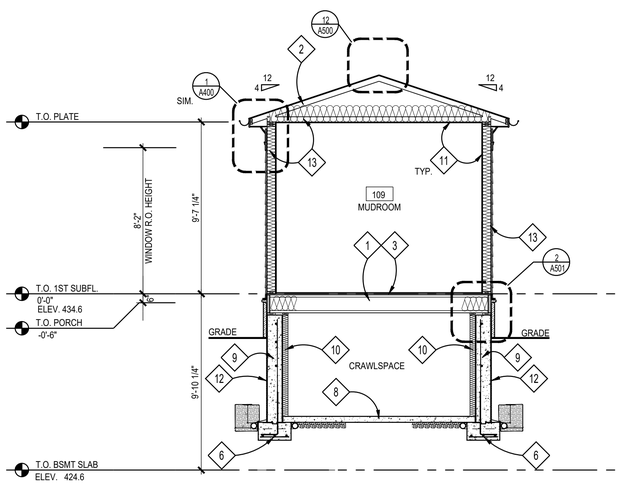

2 BUILDING SECTION
SCALE: 1/4"=1'=0

SECTION NOTES

1. FLOOR JOISTS; SEE FRAMING PLANS
2. ROOF TRUSSES BY TRUSS MANUFACTURER; SEE FRAMING PLANS
3. 3/4" ADVANTECH SUBFLOOR; GLUED & SCREWED
4. BEAM/ LINTEL/ HEADER; SEE FRAMING PLANS
5. SCHEDULED WINDOW/DOOR
6. FOOTING; SEE FOUNDATION PLAN
7. 2X6 LOAD BEARING WALL, SEE FRAMING PLANS
8. REINF. CONC. SLAB; SEE FOUNDATION PLAN
9. CONCRETE FOUNDATION WALL; SEE FOUNDATION PLAN
10. FUR OUT BASEMENT WALLS W/ 2x4's @ 16" O.C. & R-13 BATT INSULATION, TYP.
11. 1/2" GYP. BD
12. WATERPROOFING AND DRAINAGE BD TO GRADE
13. INSULATION, SEE THERMAL ENVELOPE SHEET EC001

NOTE:

1. VERIFY ALL EXTERIOR RISER & TREAD DIMENSIONS IN FIELD
2. ALL EXTERIOR WOOD TRIM TO BE TREATED FOR PROTECTION AGAINST MOISTURE, ROT, FUNGAL ATTACK & INSECTS, WINDSOR-ONE+, LIFESPAN OR EQ.
3. (T) = TEMPERED GLASS
   (E) = EGRESS

GTM ARCHITECTS

7735 OLD GEORGETOWN ROAD
SUITE 700
BETHESDA, MD 20814
(240)333-2000
(240)333-2001 FAX
WWW.GTMARCHITECTS.COM

Seal

I certify that these documents were prepared or approved by me, and that I am a duly licensed architect under the laws of the State of Maryland, license number 8385, Expiration Date: 12/26/2022

Consultant

Project
19 HIGH ST
LOT 4

Owner

Developer

Issue Description	Date
PERMIT SET	04/11/2022

GTM Project No.	18.0320
Checked By	GTM
Drawn By	LEO/NW
Scale	AS NOTED

Sheet Title
BUILDING SECTIONS

Sheet No.
A302

COPYRIGHT, 2019 GTM ARCHITECTS, INC.

FILE NAME:

* ALL EXTERIOR WOOD TRIM TO BE TREATED FOR PROTECTION AGAINST MOISTURE, ROT, FUNGAL ATTACK & INSECTS, WINDSOR-ONE+, LIFESPAN OR EQ.

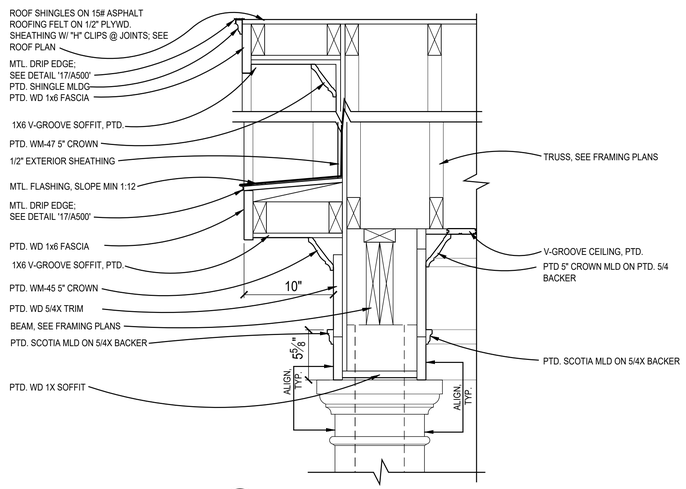

D PORCH RAKE DETAIL
SCALE: 1-1/2"=1'-0"

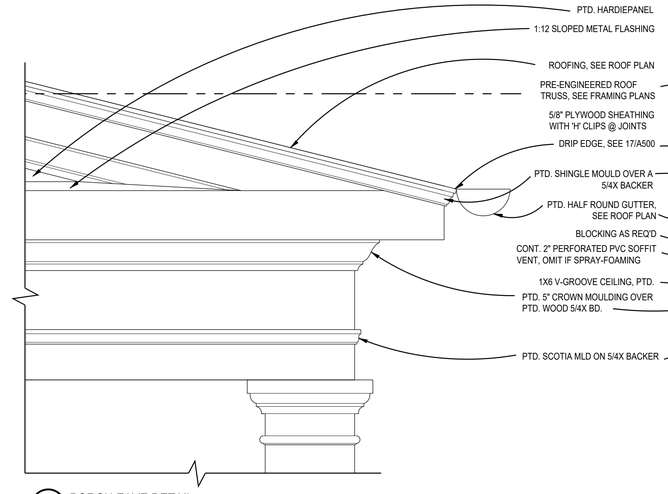

C PORCH EAVE DETAIL
SCALE: 1-1/2"=1'-0"

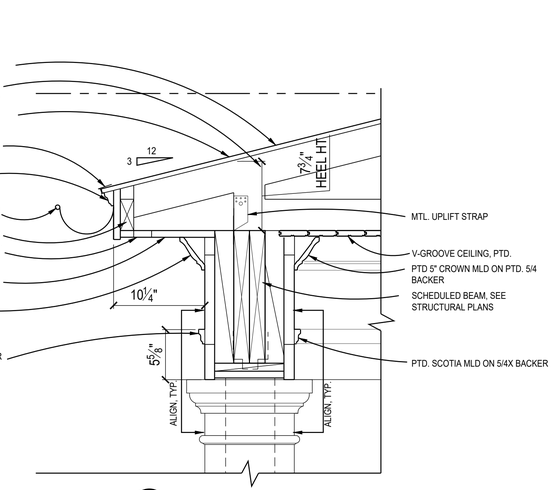

B PORCH EAVE DETAIL
SCALE: 1-1/2"=1'-0"

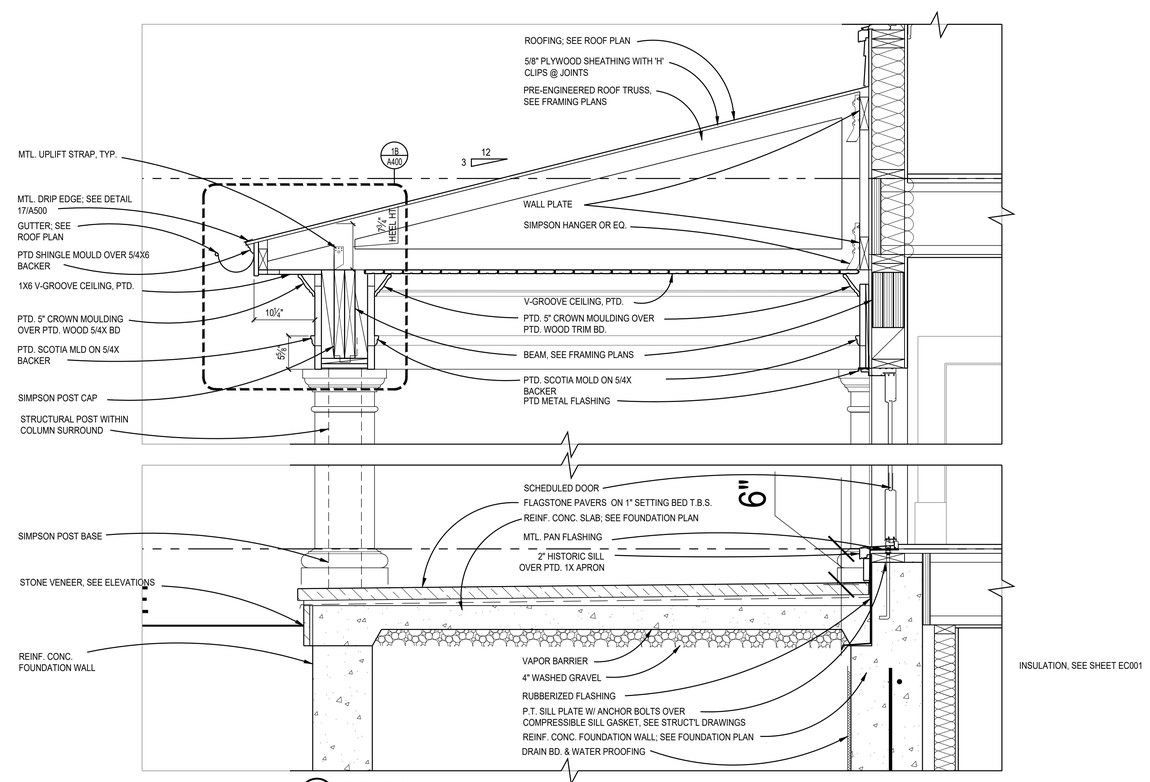

A PORCH SECTION
SCALE: 1"=1'-0"

1 FRONT PORCH DETAILS
SCALE: 1" - 1'-0"

GTM ARCHITECTS

7735 OLD GEORGETOWN ROAD
SUITE 700
BETHESDA, MD 20814
(240)333-2000
(240)333-2001 FAX
WWW.GTMARCHITECTS.COM

Seal

I certify that these documents were prepared or approved by me, and that I am a duly licensed architect under the laws of the State of Maryland, license number 8886. Expiration Date: 12/06/2022

Consultant

Project
19 HIGH ST
LOT 4

Owner

Developer

Issue Description	Date
PERMIT SET	04/11/2022

GTM Project No.	18.0320
Checked By	GTM
Drawn By	LEO/NW
Scale	AS NOTED

Sheet Title
EXTERIOR DETAILS

Sheet No.
A400

COPYRIGHT, 2019 GTM ARCHITECTS, INC.

FILE NAME:

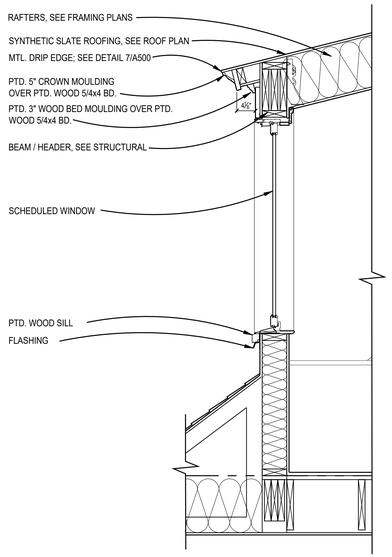

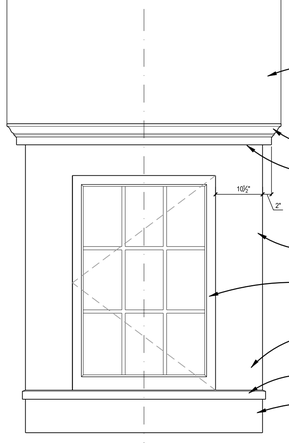

B FRONT ELEVATION
SCALE: 3/4"=1'-0"

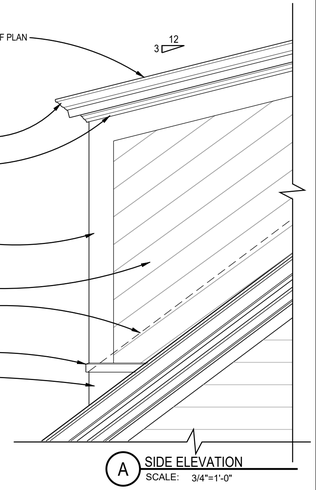

A SIDE ELEVATION
SCALE: 3/4"=1'-0"

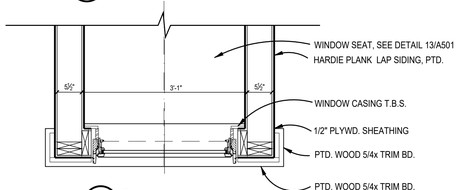

C PLAN
SCALE: 3/4"=1'-0"

2 TYP. DORMER DETAILS
SCALE: AS NOTED

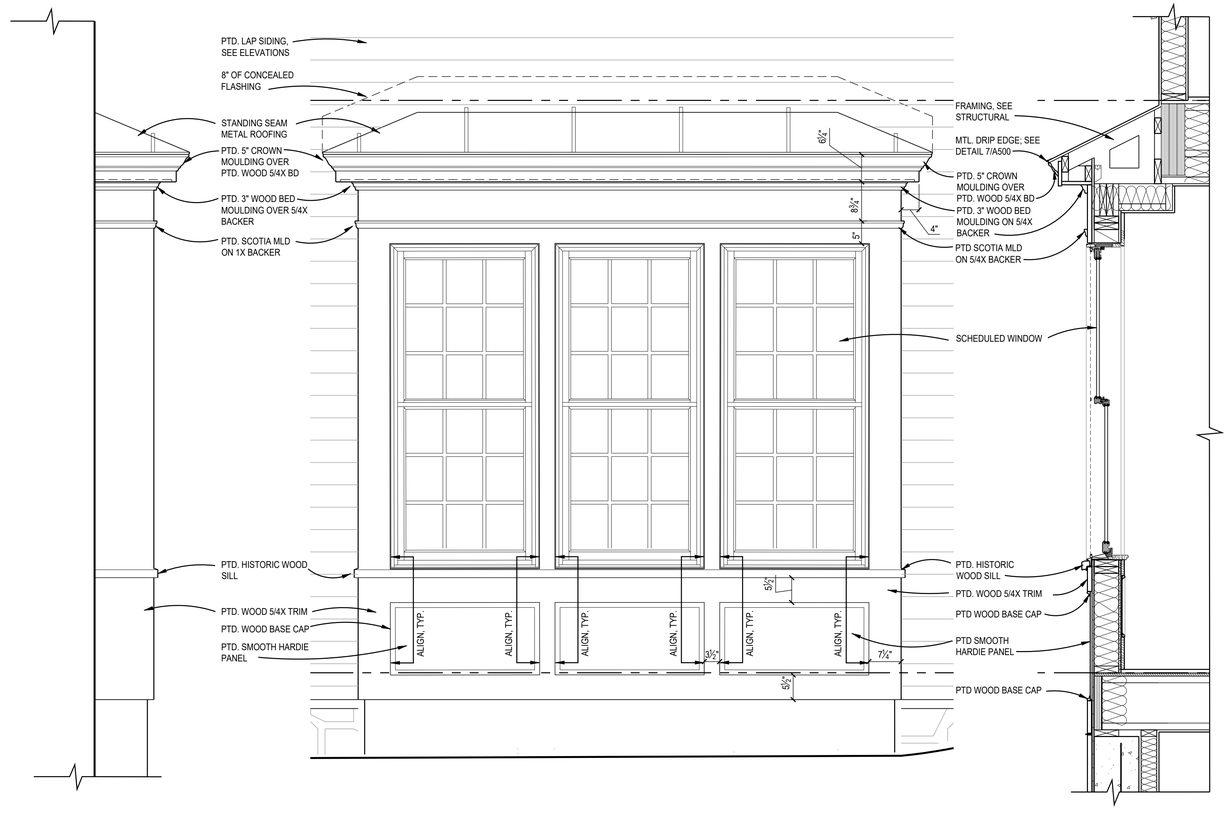

D SIDE ELEVATION
SCALE: 3/4"=1'-0"

B FRONT ELEVATION
SCALE: 3/4"=1'-0"

A SECTION
SCALE: 3/4"=1'-0"

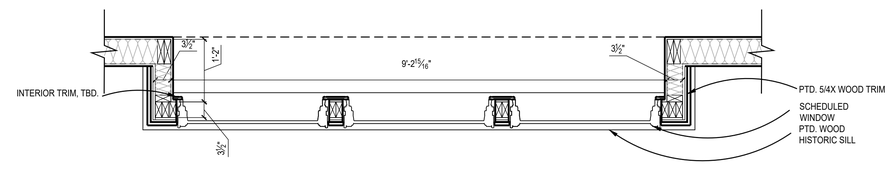

C PLAN
SCALE: 3/4"=1'-0"

1 BAY DETAILS
SCALE: AS NOTED

GTM ARCHITECTS

7735 OLD GEORGETOWN ROAD
SUITE 700
BETHESDA, MD 20814
(240)333-2000
(240)333-2001 FAX
WWW.GTMARCHITECTS.COM

Seal

I certify that these documents were prepared or approved by me, and that I am a duly licensed architect under the laws of the State of Maryland, license number 8886. Expiration Date: 12/06/2022

Consultant

Project
19 HIGH ST
LOT 4

Owner

Developer

Issue Description	Date
PERMIT SET	04/11/2022

GTM Project No.	18.0320
Checked By	GTM
Drawn By	LEO/NW
Scale	AS NOTED

Sheet Title
EXTERIOR DETAILS

Sheet No.
A401

COPYRIGHT, 2019 GTM ARCHITECTS, INC.

FILE NAME:

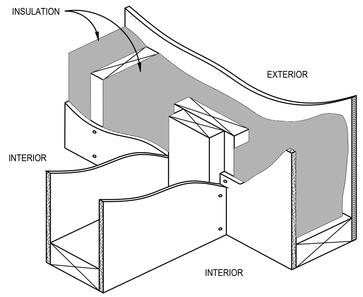

20 INTERSECTING WALL FRAMING DETAIL
SCALE: N.T.S.
R03-023 (1X1)

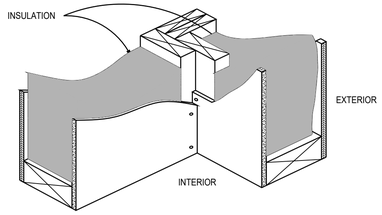

19 CORNER FRAMING DETAIL
SCALE: N.T.S.
R03-022 (1X1)

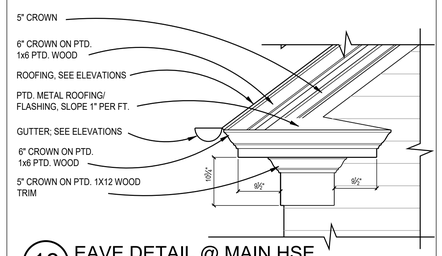

18 EAVE DETAIL @ MAIN HSE
SCALE: 3/4"=1'-0"

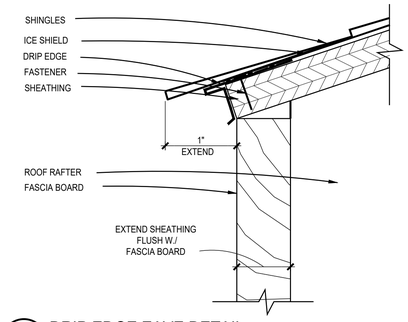

17 DRIP EDGE EAVE DETAIL
SCALE: 1"=1"
R04-051

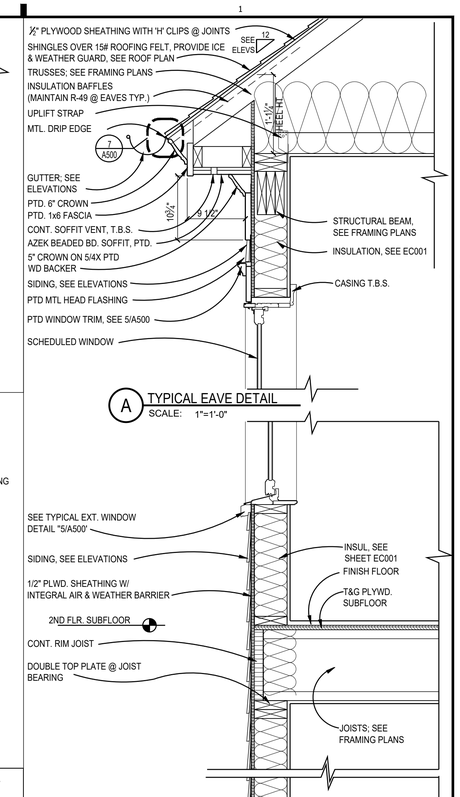

A TYPICAL EAVE DETAIL
SCALE: 1"=1'-0"

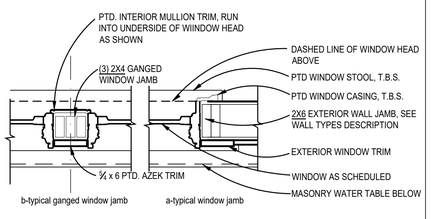

15 TYPICAL GANGED WINDOW
SCALE: 1"=1'-0"
(1X1)

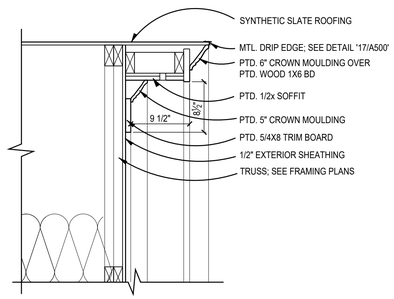

14 TYP. RAKE DETAIL
SCALE: 1" = 1'-0"
(1X1)

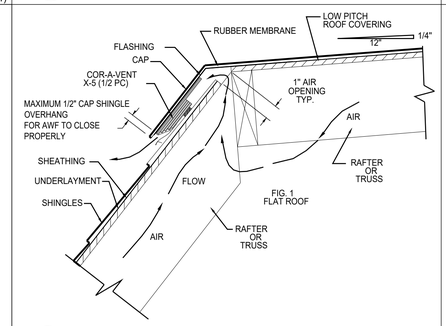

13 COR-A-VENT UN EQUAL PITCH DET.
SCALE: 13
??? (1X1)

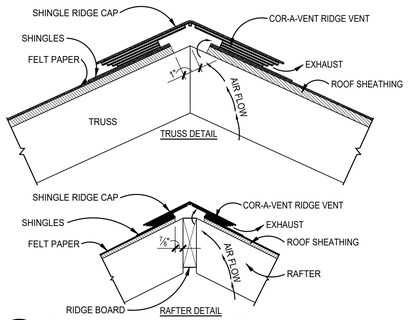

12 TYP. RIDGE VENT DETAIL
SCALE: 3"=1'-0"

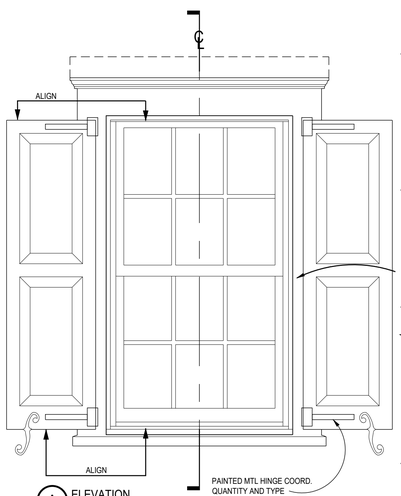

A ELEVATION
SCALE: 1"=1'-0"

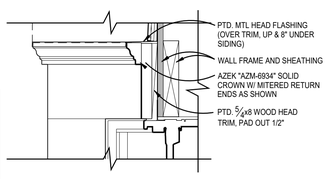

B HEAD DETAIL
SCALE: 3"=1'-0"

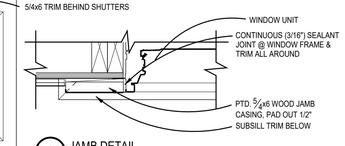

C JAMB DETAIL
SCALE: 3"=1'-0"

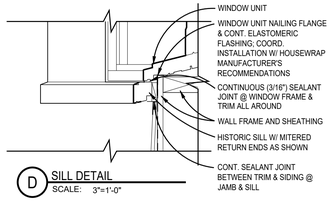

D SILL DETAIL
SCALE: 3"=1'-0"

* ALL EXTERIOR WOOD TRIM TO BE TREATED FOR PROTECTION AGAINST MOISTURE, ROT, FUNGAL ATTACK & INSECTS, WINDSOR-ONE+, LIFESPAN OR EQ.

5 TYP. EXT. WINDOW DETAILS
SCALE: AS NOTED
??? (2X2)

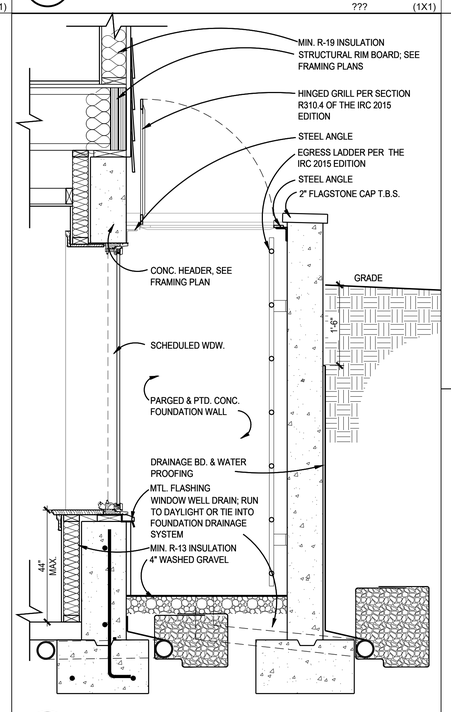

3 EGRESS WINDOW WELL DETAIL
SCALE: 3/4" = 1'-0"
(1X2)

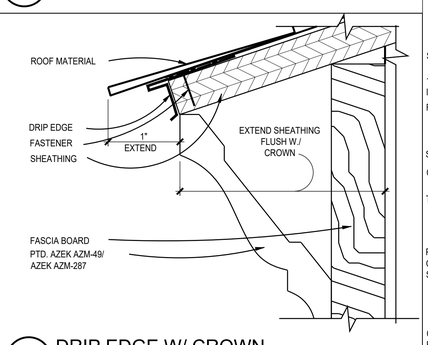

7 DRIP EDGE W/ CROWN
SCALE: 1'-0"=1'-0"
(1X1)

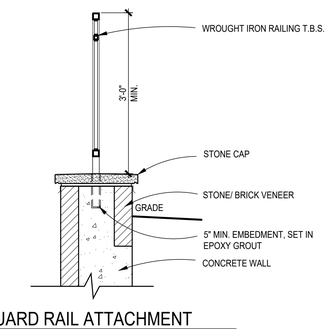

2 GUARD RAIL ATTACHMENT
SCALE: 3/4"=1'-0"

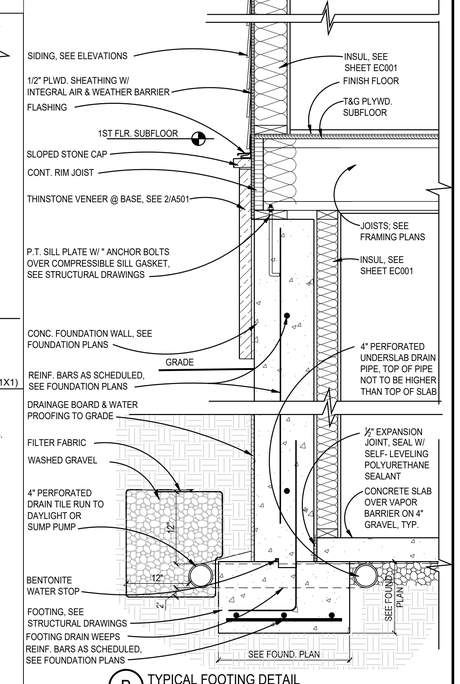

B TYPICAL FOOTING DETAIL
SCALE: 1"=1'-0"

1 TYPICAL WALL SECTION
SCALE: 1"=1'-0"
(1X4)

FILE NAME:

GTM ARCHITECTS

7735 OLD GEORGETOWN ROAD
SUITE 700
BETHESDA, MD 20814
(240)333-2000
(240)333-2001 FAX
WWW.GTMARCHITECTS.COM

Seal

Consultant

Project
19 HIGH ST
LOT 4

Owner

Developer

Issue Description	Date
PERMIT SET	04/11/2022

GTM Project No.	18.0320
Checked By	GTM
Drawn By	LEO/NW
Scale	AS NOTED

Sheet Title
DETAILS

Sheet No.
A500

COPYRIGHT, 2019 GTM ARCHITECTS, INC.

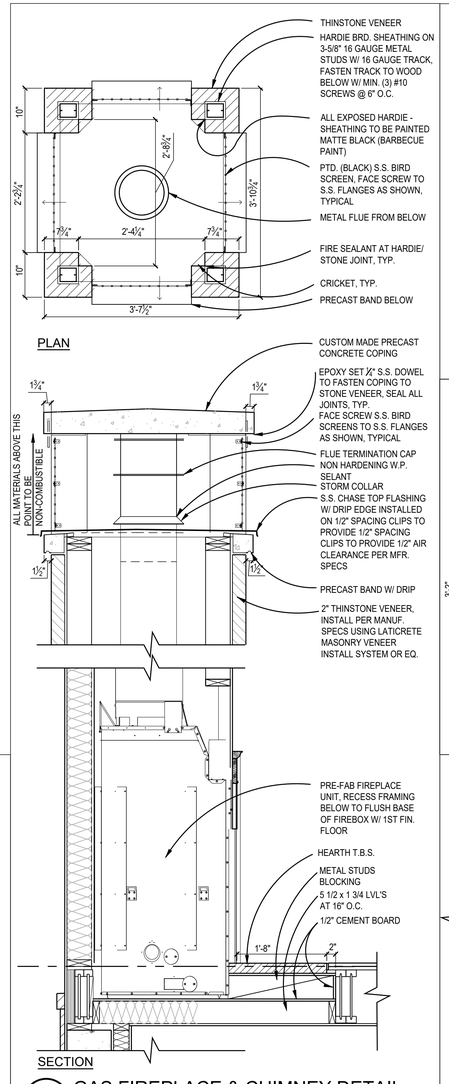

4 GAS FIREPLACE & CHIMNEY DETAIL
SCALE: 3/4"=1'-0"
??? (1X3)

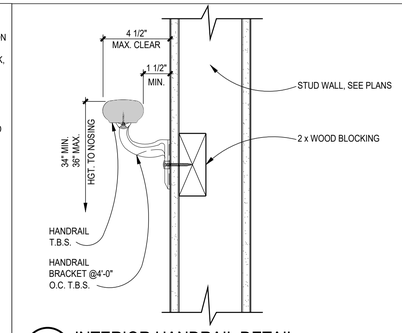

13 INTERIOR HANDRAIL DETAIL
SCALE: 3"=1'-0"
R08-044

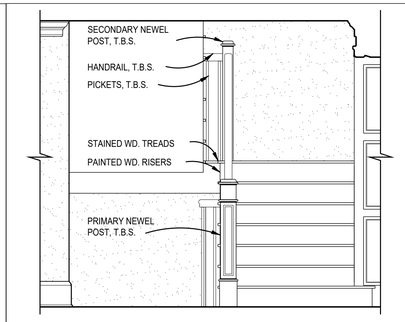

12 STAIR DETAIL
SCALE: 1/2"=1'-0"
(1X1)

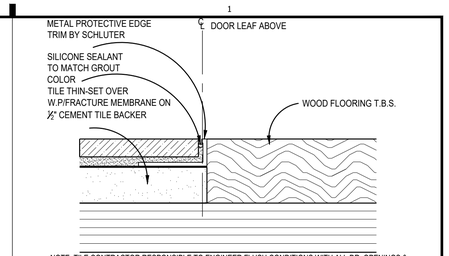

NOTE: TILE CONTRACTOR RESPONSIBLE TO ENGINEER FLUSH CONDITIONS WITH ALL DR. OPENINGS & WOOD/CARPET INSETS. & TO SUBMIT ANY DETAIL OR RAMPED THRESHOLDS TO GTM FOR APPROVAL. TILE CONTRACTOR RESPONSIBLE TO PREP & INSTALL ALL TILE MATERIALS, & TO KEEP PREMISES CLEAN DURING & AFTER INSTALLATION. TILE CONTRACTOR RESPONSIBLE TO GROUT & SEAL FINISHED INSTALLATION, & SUBMIT COLORS FOR GROUTING MATERIALS TO GTM FOR APPROVAL, & PROVIDE SPEC SHEETS ON SEALANTS, ALONG WITH MAINTENANCE SPECS. FOR FLOOR AREAS W/ RADIUS, USE EDGE TRIM W/ RADIUS PERFORATIONS, SCHLUTER "SCHIENE" OR SIM.

16 TILE-TO-WOOD TRANSITION
SCALE: 12"=1'-0"
R06-050 (1X1)

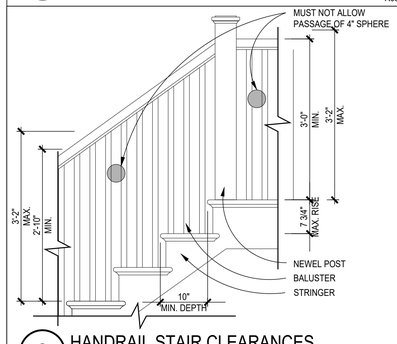

8 HANDRAIL STAIR CLEARANCES
SCALE: 3/4"=1'-0"
R08-045

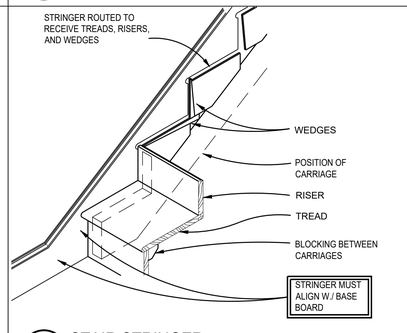

7 STAIR STRINGER
SCALE: 1"=1'-0"
R08-040

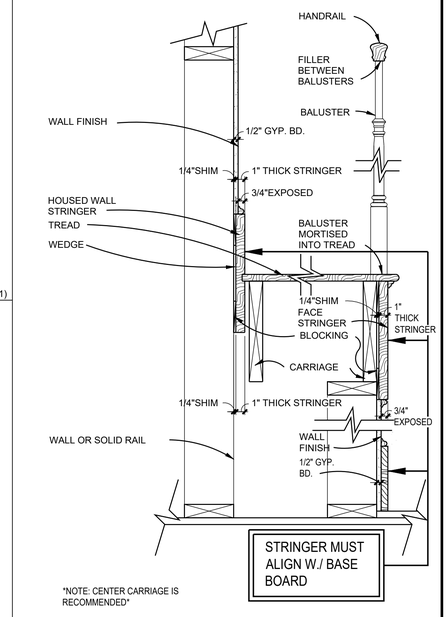

6 TYP. WOOD STAIR TRIM DETAIL
SCALE: 1 1/2"=1'-0"
R08-041

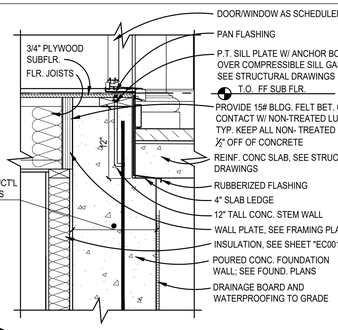

5 REVERSE LEDGE DETAIL
SCALE: 1"=1'-0"

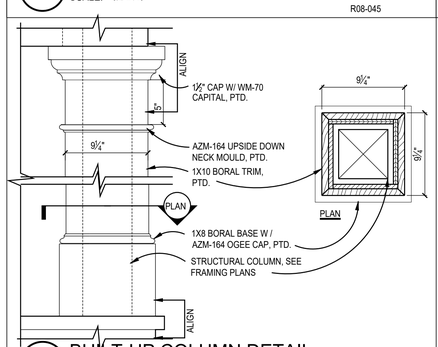

3 BUILT-UP COLUMN DETAIL
SCALE: 1 1/2" =1'-0"

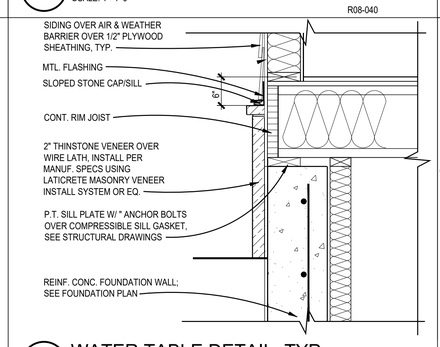

2 WATER TABLE DETAIL, TYP.
SCALE: 1"=1'-0"
(1X1)

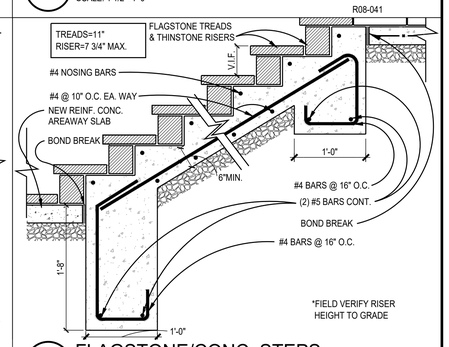

1 FLAGSTONE/CONC. STEPS
SCALE: 1"=1'-0"

GTM ARCHITECTS

7735 OLD GEORGETOWN ROAD
SUITE 700
BETHESDA, MD 20814
(240)333-2000
(240)333-2001 FAX
WWW.GTMARCHITECTS.COM

Seal

Consultant

Project
19 HIGH ST
LOT 4

Owner

Developer

PERMIT SET	04/11/2022

Issue Description	Date

GTM Project No.	18.0320
Checked By	GTM
Drawn By	LEO/NW
Scale	AS NOTED

Sheet Title
DETAILS

Sheet No.
A501

COPYRIGHT, 2019 GTM ARCHITECTS, INC.

FILE NAME:

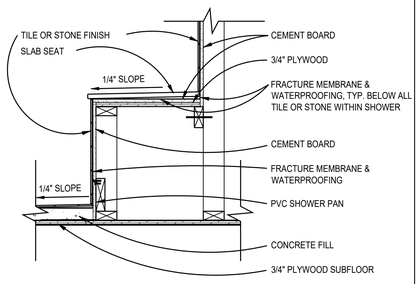

20 SECTION @ SHOWER BENCH
SCALE: 1"=1'-0"
R06-046

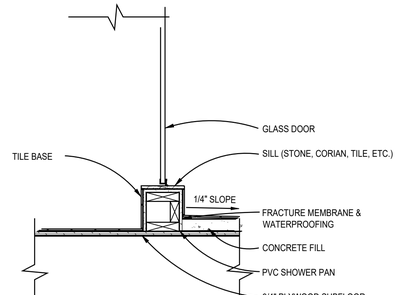

19 SECTION @ SHOWER CURB
SCALE: 1"=1'-0"
R06-047

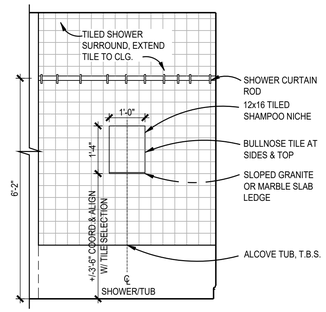

18 TILED RECESS DETAIL
SCALE: 1/2"=1'-0"
(1X1)

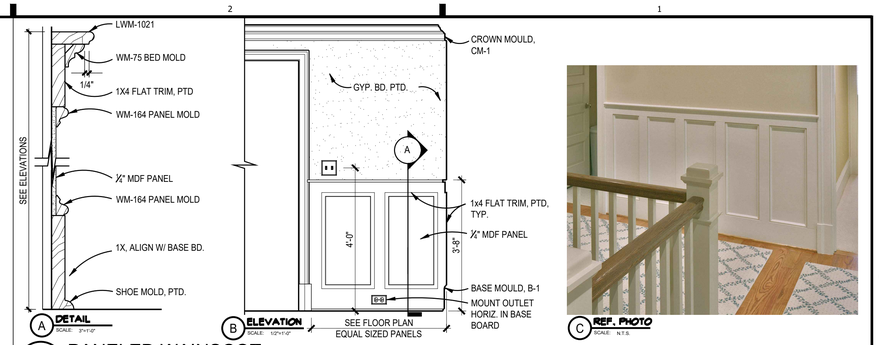

15 PANELED WAINSCOT
SCALE: AS NOTED

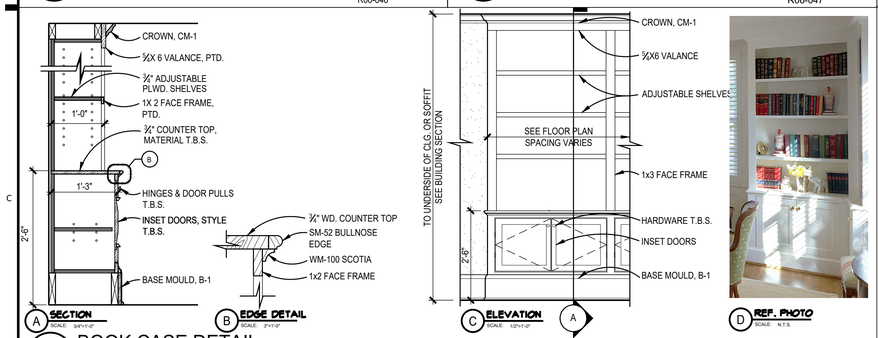

15 BOOK CASE DETAIL
SCALE: AS NOTED

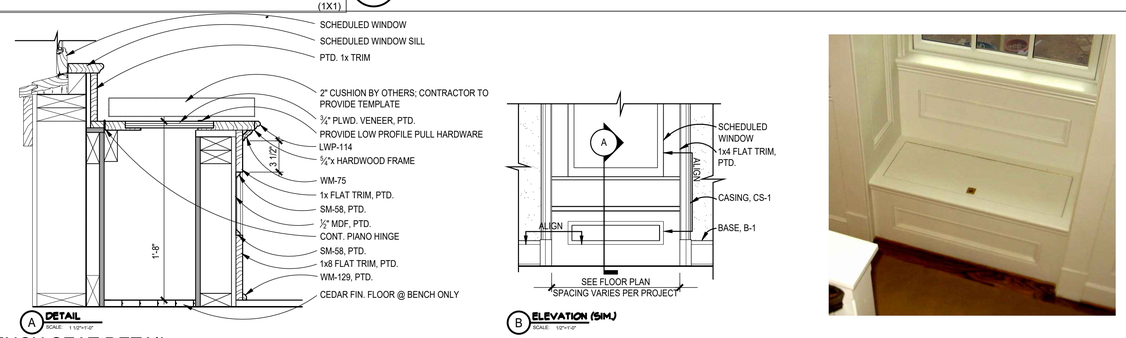

13 BENCH SEAT DETAIL
SCALE: AS NOTED
(1X1)
(3X1)

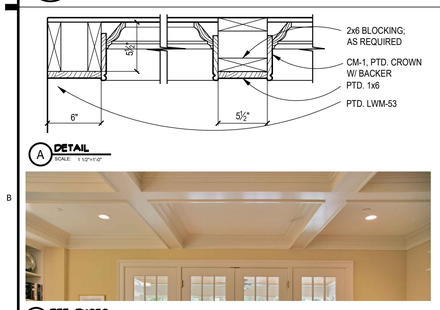

REF. PHOTO

10 COFFERED CEILING DETAIL
SCALE: 1 1/2" = 1'-0"
(1X1)

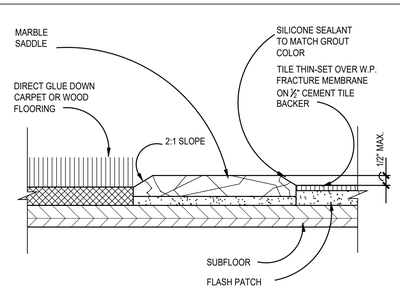

9 THRESHOLD DETAIL
SCALE: N.T.S.
S14-003 (1X1)

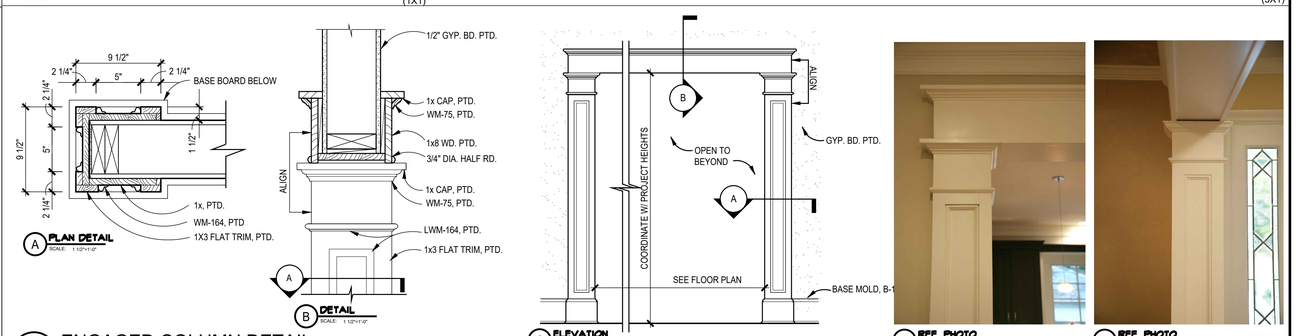

8 ENGAGED COLUMN DETAIL
SCALE: AS NOTED

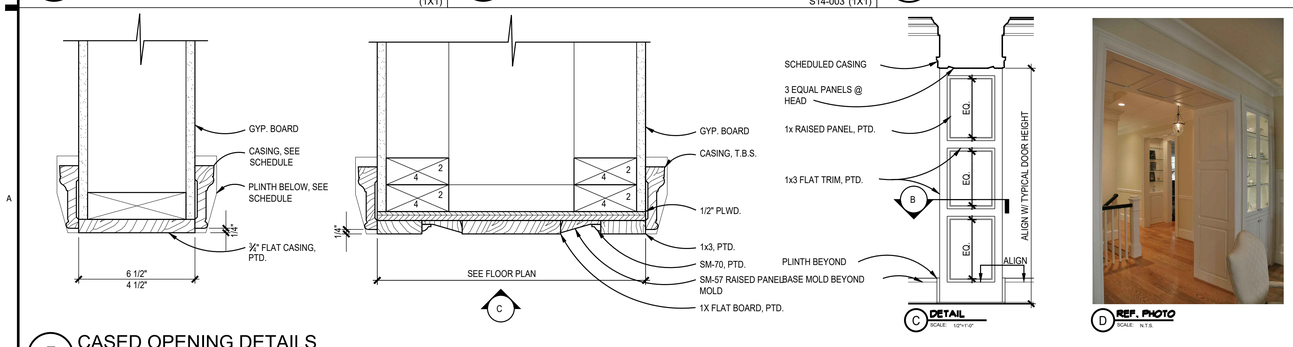

5 CASED OPENING DETAILS
SCALE: AS NOTED

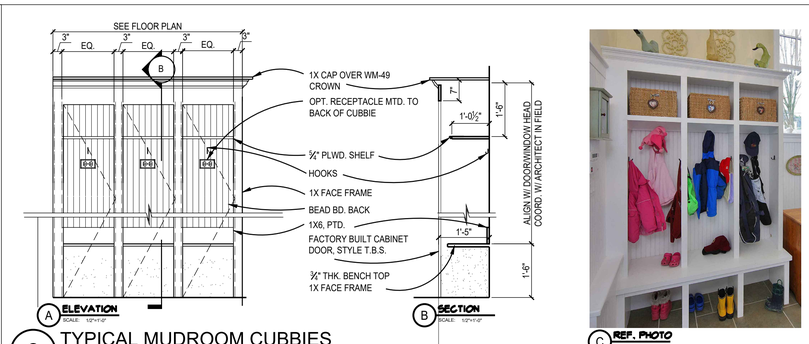

2 TYPICAL MUDROOM CUBBIES
SCALE: 1/2"=1'-0"

GTM ARCHITECTS

7735 OLD GEORGETOWN ROAD
SUITE 700
BETHESDA, MD 20814
(240)333-2000
(240)333-2001 FAX
WWW.GTMARCHITECTS.COM

Seal

Consultant

Project
19 HIGH ST
LOT 4

Owner

Developer

PERMIT SET	04/11/2022

Issue Description	Date

GTM Project No.	18.0320
Checked By	GTM
Drawn By	LEO/NW
Scale	AS NOTED

Sheet Title
DETAILS

Sheet No.
A502

COPYRIGHT, 2019 GTM ARCHITECTS, INC.

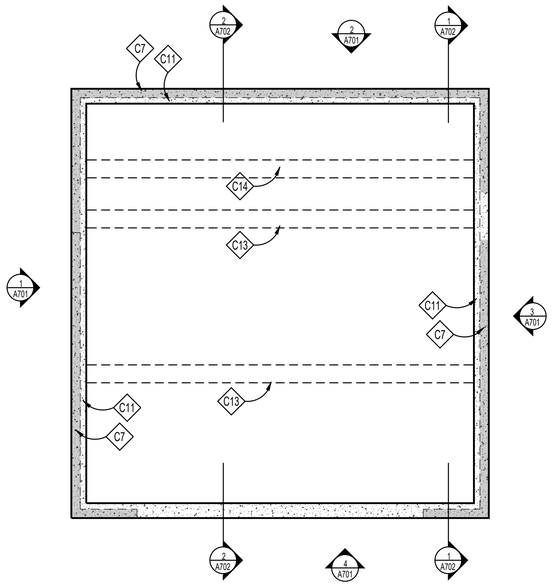

1 GARAGE LOWER LEVEL PLAN
Scale: 1/4"=1'-0"

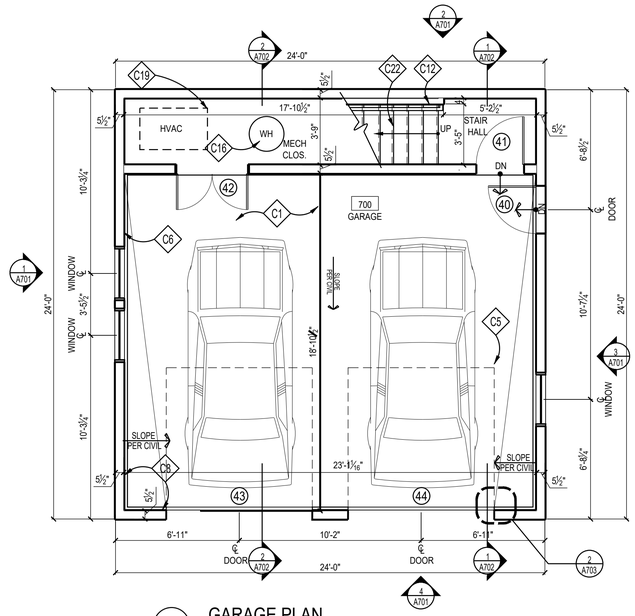

2 GARAGE PLAN
Scale: 1/4"=1'-0"

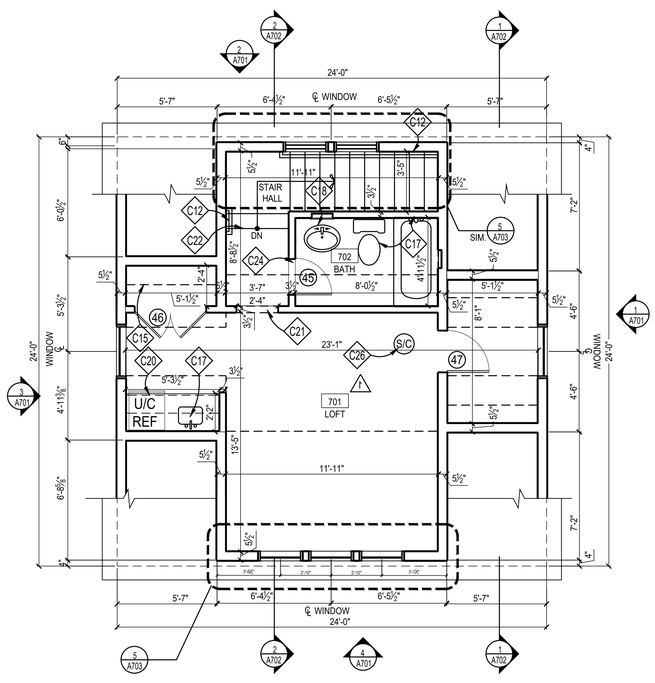

3 GARAGE ATTIC PLAN
Scale: 1/4"=1'-0"

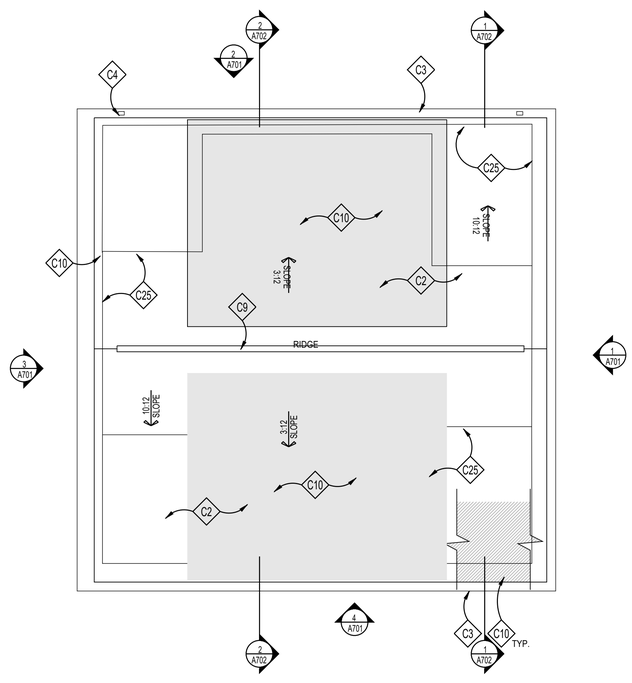

4 GARAGE ROOF PLAN
Scale: 1/4"=1'-0"

CONSTRUCTION NOTES

- C1 REINF. CONC. SLAB; SEE STRUCTURAL PLANS
- C2 ROOF SHINGLES TO MATCH MAIN HOUSE; SEE GENERAL ROOFING NOTES, THIS SHEET
- C3 GUTTER TO MATCH MAIN HOUSE
- C4 DOWNSPOUT TO MATCH MAIN HOUSE, TERMINATED IN PERFORATED PIPE; EXTEND BELOW GRADE; DRAIN TO DAYLIGHT OR SUMP PUMP
- C5 GARAGE DOOR TRACKS ABOVE
- C6 CONC. CURB BELOW
- C7 CONCRETE FOUNDATION WALL; SEE STRUCTURAL PLANS
- C8 PROVIDE 5/8" TYPE "X" GYP. BRD ON WALLS AND CEILING OF GARAGE; SEPARATING ALL HABITABLE ROOMS FROM GARAGE & PER IRC T-302.1(1); SEE DTL 5/A703 FOR EXTERIOR WALLS
- C9 RIDGE/HIP VENTS BY COR-A-VENT OR APPROVED EQUAL REMOVE WITH THE USAGE OF FOAM INSULATION
- C10 ICE AND WATER GUARD AT ALL EAVES, VALLEYS AND LOW SLOPE ROOFS; SEE GENERAL ROOFING NOTE #1 BELOW
- C11 PROVIDE 4" SLAB BEARING LEDGE
- C12 HANDRAIL @ 34" ABOVE NOSING PER IRC 2018; HANDRAIL GRIP SIZE PER CODE
- C13 DASHED LINE OF GRADE BEAM ABOVE, SEE FOUNDATION PLANS
- C14 DASHED LINE OF THICKENED SLAB AT INTERIOR BEARING WALL AND TURNDOWN SLAB ABOVE
- C15 TYP. CLOSET SHELVES + RODS
- C16 PROVIDE TANKLESS WATER HEATER T.B.S., RINNAI OR EQ.
- C17 PLUMBING FIXTURES, & ACCESSORIES T.B.S. BY OWNER, TYP.
- C18 VANITY WITH SINK, FAUCET AND COUNTERTOP, T.B.S.
- C19 CONDITION SPACE WITH DUCTLESS MINI-SPLIT SYSTEM, GC TO COORDINATE FINAL LOCATION WITH OWNER
- C20 CABINETS,COUNTERTOPS & APPLIANCES, T.B.S. FINAL LAYOUT TO BE DETERMINED BY KITCHEN DESIGNER & APPROVED BY OWNER.
- C21 CASED OPENING; HEAD TO ALIGN WITH DOOR AND WINDOW HEAD HEIGHT, SEE DETAIL 18/A307
- C22 WD. STEPS; 1x RISERS W/ TREADS TO MATCH H.W.F.; RAILING T.B.S, SEE DETAILS 4,5&9/A307. FOLLOW IRC 2018 R311.7
- C23 PROVIDE OVERFLOW FLOOR PAN & FLOOR DRAIN UNDER WASHING MACHINE
- C24 MARBLE THRESHOLD T.B.S, SEE DETAIL 3/A307
- C25 LINE OF FRAME WALL BELOW
- C26 HARDWIRED WITH BATTERY BACK UP SMOKE DETECTOR/ CARBON MONOXIDE COMBO UNIT PER IRC 2018

ROOFING NOTES

1. MEMBRANE ROOF SHALL BE 60 MIL, WHITE PVC, ASTM D 4434, TYPE III, FABRIC REINFORCED. THE MEMBRANE SHALL BE ADHERED TO MECHANICALLY FASTENED, POLYISOCYANURATE BOARD INSULATION ASTM C 1289, FELT OR GLASS-FIBER MAT FACER ON BOTH MAJOR SURFACES. TAPERED INSULATION SHALL BE FACTORY-MADE TO A MINIMUM SLOPE OF 1/4" PER FOOT. INSULATION SHALL BE INSTALLED IN TWO LAYERS WITH JOINTS STAGGERED.
2. PROVIDE FLASHING FOR MIN. 8" EACH SIDE OF ALL VALLEYS & PITCH CHANGES

WALL TYPES

TYPICAL EXTERIOR WALL: SEE DETAIL 5 BELOW

TYPICAL NON-BEARING INTERIOR PARTITION: 2x4 WD. STUDS @ 16" O.C. W/ 1/2" GYP. BD. EACH SIDE; INCREASE WALL THICKNESS AS SHOWN TO ALIGN FINISHES WHERE SHOWN.

GENERAL NOTES

1. UNLESS INDICATED OTHERWISE, DIMENSIONS ARE TO FACE OF FRAMING.
2. VERIFY ALL EXTERIOR RISER + TREAD DIMENSIONS IN THE FIELD.

GTM ARCHITECTS

7735 OLD GEORGETOWN ROAD
SUITE 700
BETHESDA, MD 20814
(240)333-2000
(240)333-2001 FAX
WWW.GTMARCHITECTS.COM

Seal

Consultant

Project
19 HIGH ST
LOT 4

Owner

Developer

Issue Description	Date
PERMIT SET	04/11/2022

GTM Project No.	18.0320
Checked By	GTM
Drawn By	LEO/NW
Scale	AS NOTED

Sheet Title
GARAGE PLANS

Sheet No.
A700

COPYRIGHT, 2019 GTM ARCHITECTS, INC.

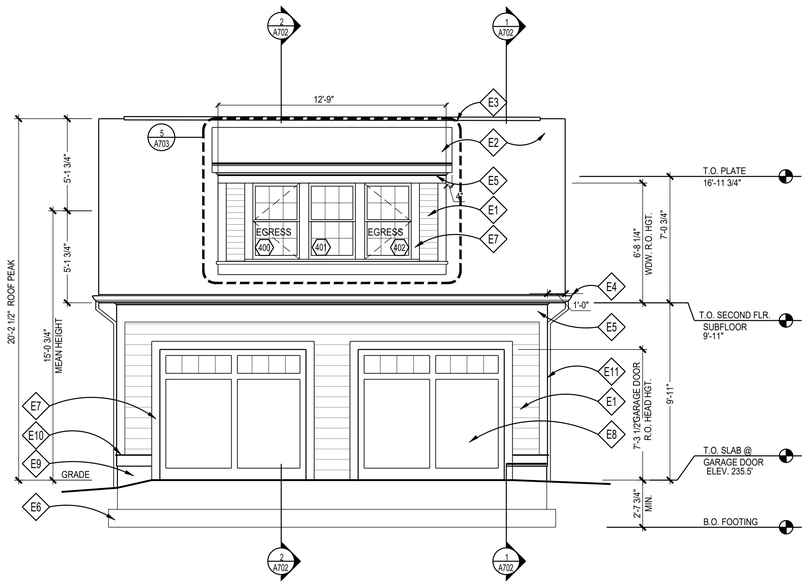

4 FRONT ELEVATION

SCALE: 1/4"=1'-0"

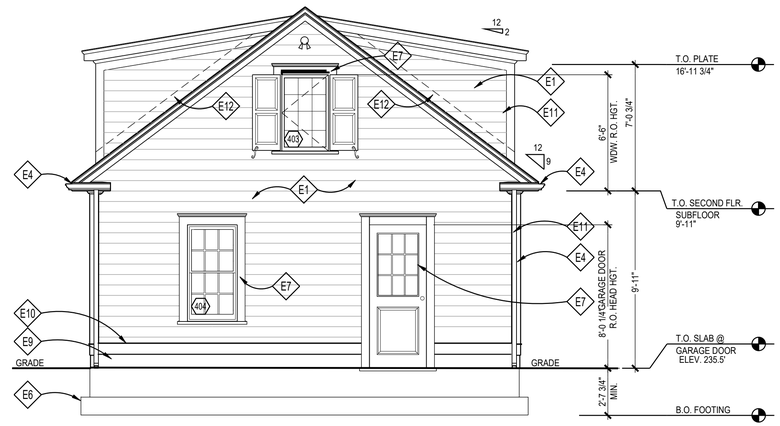

3 RIGHT SIDE ELEVATION

SCALE: 1/4"=1'-0"

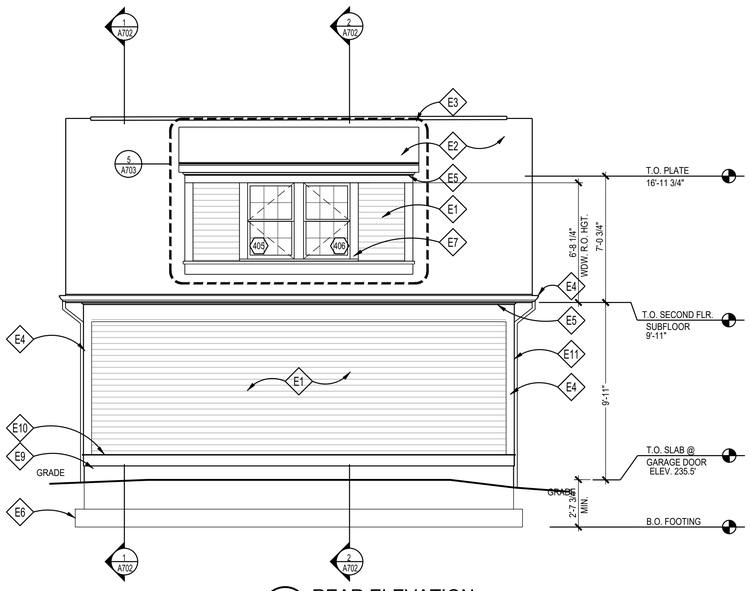

2 REAR ELEVATION

SCALE: 1/4"=1'-0"

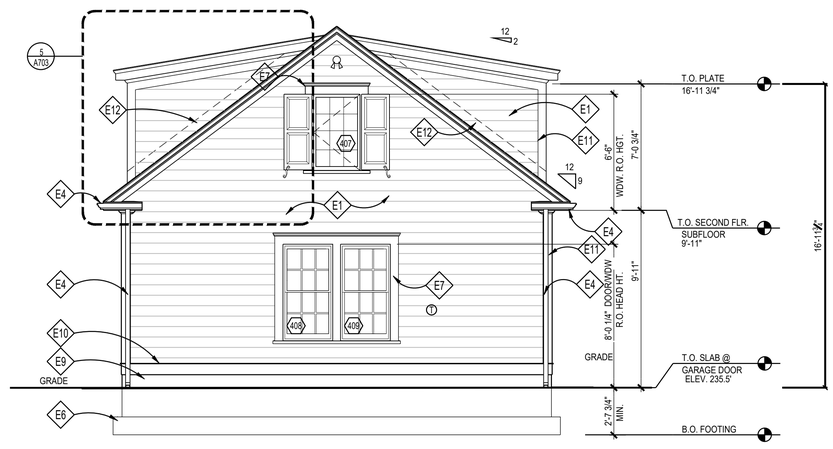

1 LEFT SIDE ELEVATION

SCALE: 1/4"=1'-0"

ELEVATION NOTES

- E1 HARDI-PLANK SMOOTH LAP SIDING, 5" EXPOSURE, INSTALL PER MANUFACTURER, PTD.
- E2 STANDING SEAM METAL ROOFING
- E3 RIDGE/HIP VENT BY COR-A-VENT OR APPROVED EQUAL
- E4 GUTTER & D.S.; MATERIAL & COLOR TO MATCH HOUSE
- E5 PTD. 5/4x WOOD W/ WM-47 CROWN
- E6 LINE OF FOOTING BELOW, TYP.
- E7 PAINTED WOOD 5/4x6 WINDOW/DOOR TRIM, TYP.; SEE GENERAL PAINTED WOOD NOTES
- E8 PAINT-GRADE GARAGE DOOR, TBS.
- E9 PAINTED AND PARGED CONCRETE FOUNDATION
- E10 PTD. 5/4x10 WOOD W/ WM-197 DRIP CAP, SEE GENERAL NOTES THIS SHEET
- E11 PTD. PAINTED WOOD 5/4x6 CORNER BOARDS.; SEE GENERAL WOODEN TRIM NOTES, THIS SHEET
- E12 CONCEALED MTL FLASHING AT ALL VERTICAL TRANSITIONS, EXTEND MIN 8" UP WALL BEHIND SIDING.

NOTE:
VERIFY ALL EXTERIOR RISER & TREAD DIMENSIONS IN FIELD.

GENERAL WOOD TRIM NOTES

ALL WOOD TRIM (CORNERBOARDS, FRIEZE BOARDS, SOFFITS, WINDOW CASING, SKIRTBOARDS, APRONS, ETC.) TO BE WINDSOR-ONE+ OR APPROVED EQ. PRIME ALL END CUTS & INSTALL PER MANUFACTURES INSTRUCTIONS.

GTM ARCHITECTS

7735 OLD GEORGETOWN ROAD
SUITE 700
BETHESDA, MD 20814
(240)333-2000
(240)333-2001 FAX
WWW.GTMARCHITECTS.COM

Seal

STATE OF MARYLAND · NICHOLAS WOLF · No. 35886 · GTM ARCHITECTS

I certify that these documents were prepared or approved by me, and that I am a duly licensed architect under the laws of the State of Maryland, license number 35886, Expiration Date: 10/06/2022.

Consultant

Project

19 HIGH ST
LOT 4

Owner

Developer

Issue Description	Date
PERMIT SET	04/11/2022

GTM Project No.	18.0320
Checked By	GTM
Drawn By	LEO/NW
Scale	AS NOTED

Sheet Title

GARAGE ELEVATIONS

Sheet No.

A701

COPYRIGHT, 2019 GTM ARCHITECTS, INC.

FILE NAME:

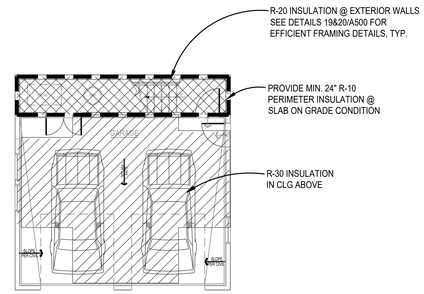

3 GARAGE THERMAL ENVELOPE PLAN
Scale: 1/8"=1'-0"

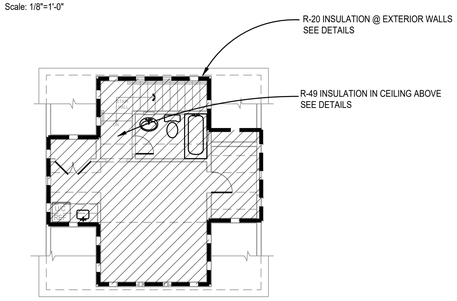

4 GARAGE ATTIC THERMAL ENVELOPE PLAN
Scale: 1/8"=1'-0"

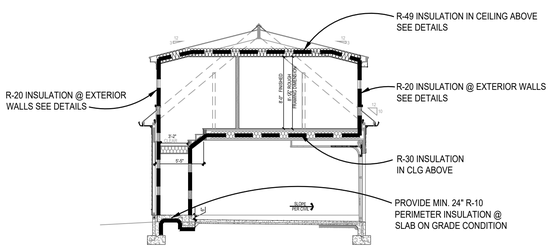

5 GARAGE THERMAL ENVELOPE SECTION
Scale: 1/8"=1'-0"

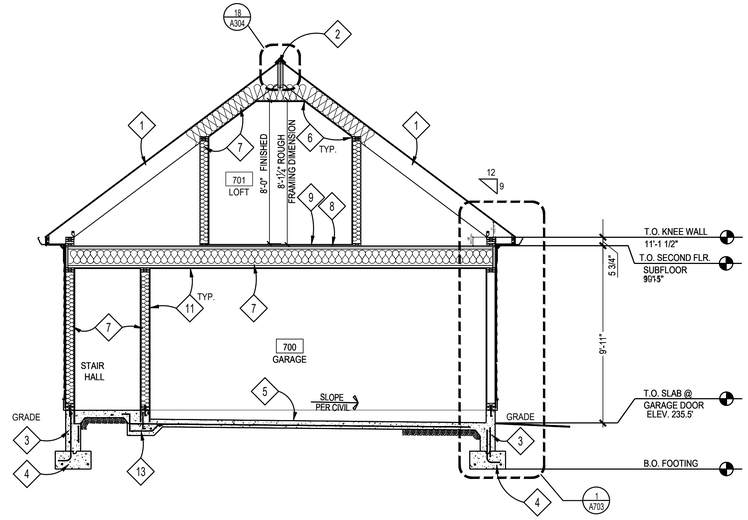

1 GARAGE SECTION
SCALE: 1/4"=1'-0"

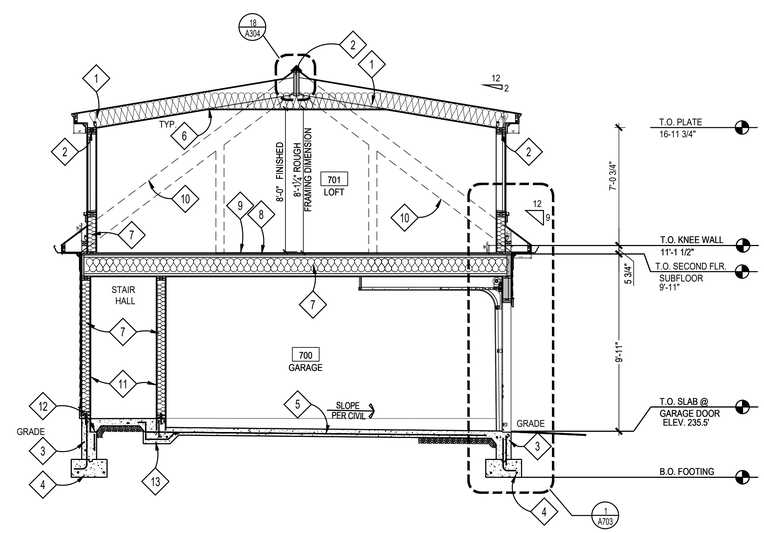

1 GARAGE SECTION
SCALE: 1/4"=1'-0"

SECTION NOTES

1. RAFTERS, SEE FRAMING PLANS
2. BEAM/ LINTEL/ HEADER; SEE FRAMING PLANS
3. CONCRETE FOUNDATION WALL; SEE FOUNDATION PLAN
4. FOOTING; SEE FOUNDATION PLAN
5. REINF. CONC. SLAB; SEE FOUNDATION PLAN
6. 1/2" GYP. BD, TYP.
7. INSULATION (SEE THERMAL ENVELOPE DIAGRAMS, THIS SHEET, FOR INSULATION INFORMATION)
8. FLOOR JOISTS; SEE FRAMING PLANS
9. 3/4" T&G PLYWD. SUBFLOOR; GLUED & SCREWED
10. DASHED LINE OF RAFTER/ROOF LINE BEYOND
11. 5/8" TYPE 'X' GYP. BD.
12. SLAB LEDGE; SEE STRUCTURAL DRAWINGS
13. TURNDOWN SLAB; SEE STRUCTURAL DRAWINGS

NOTE:
VERIFY ALL EXTERIOR RISER AND TREAD DIMENSIONS IN FIELD.

GTM ARCHITECTS
7735 OLD GEORGETOWN ROAD
SUITE 700
BETHESDA, MD 20814
(240)333-2000
(240)333-2001 FAX
WWW.GTMARCHITECTS.COM

Seal

I certify that these documents were prepared or approved by me, and that I am a duly licensed architect under the laws of the State of Maryland, license number 8886. Expiration Date: 12/06/2022.

Consultant

Project
19 HIGH ST
LOT 4

Owner

Developer

PERMIT SET	04/11/2022
Issue Description	Date

GTM Project No.	18.0320
Checked By	GTM
Drawn By	LEO/NW
Scale	AS NOTED

Sheet Title
GARAGE SECTIONS & TE DIAGRAMS

Sheet No.
A702

COPYRIGHT, 2019 GTM ARCHITECTS, INC.

FILE NAME:

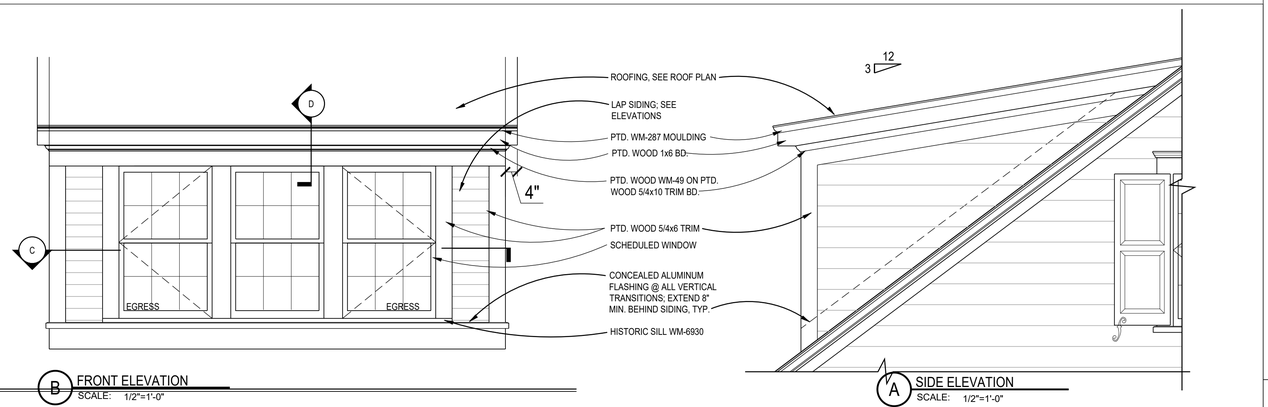

B FRONT ELEVATION
SCALE: 1/2"=1'-0"

A SIDE ELEVATION
SCALE: 1/2"=1'-0"

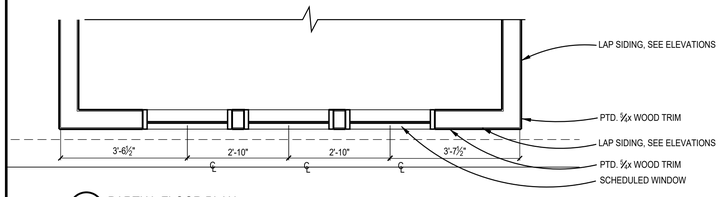

C PARTIAL FLOOR PLAN
SCALE: 1/2"=1'-0"

5 DORMER DETAILS
SCALE: AS NOTED

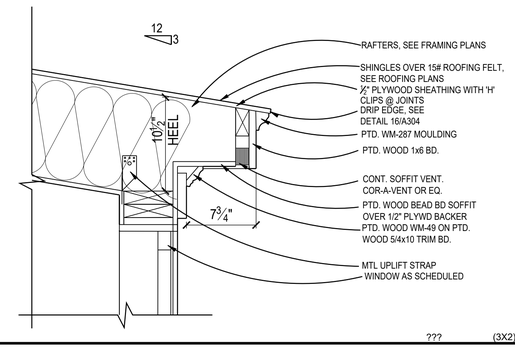

??? (3X2)

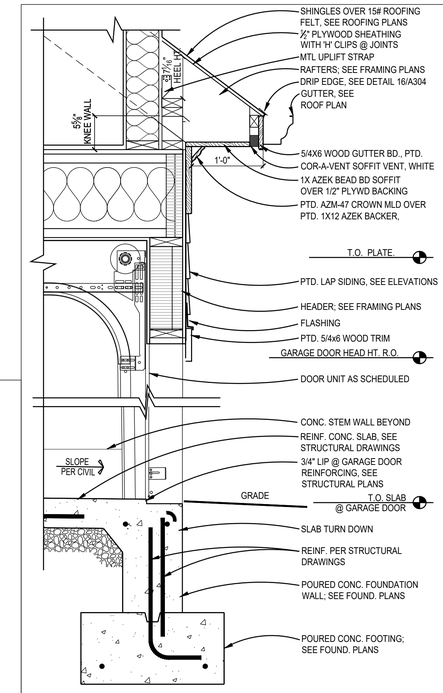

7 TYP. GARAGE DOOR DETAIL
SCALE: 1"=1'-0"

(1X2)

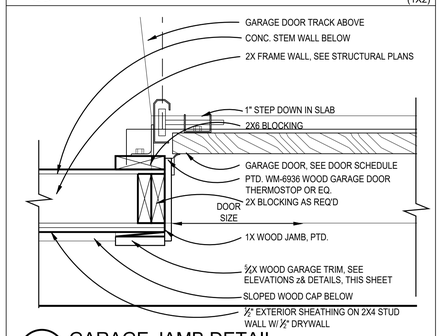

2 GARAGE JAMB DETAIL
SCALE: 1 1/2"=1'-0"

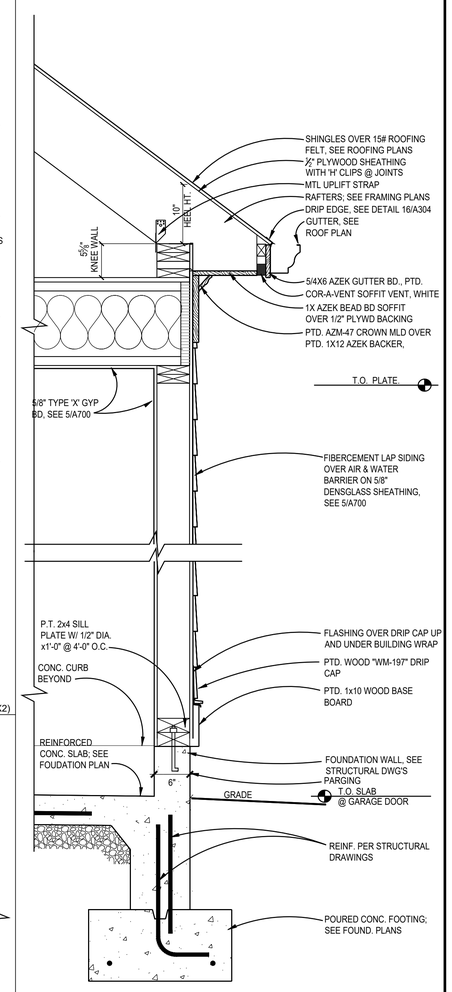

1 TYPICAL WALL SECTION
SCALE: 1"=1'-0"

??? (1X3)

GTM ARCHITECTS

7735 OLD GEORGETOWN ROAD
SUITE 700
BETHESDA, MD 20814
(240)333-2000
(240)333-2001 FAX
WWW.GTMARCHITECTS.COM

Seal

I certify that these documents were prepared or approved by me, and that I am a duly licensed architect under the laws of the State of Maryland, license number 8886. Expiration Date: 12/06/2022.

Consultant

Project
19 HIGH ST LOT 4

Owner

Developer

PERMIT SET	04/11/2022

Issue Description	Date

GTM Project No.	18.0320
Checked By	GTM
Drawn By	LEO/NW
Scale	AS NOTED

Sheet Title
GARAGE DETAILS

Sheet No.
A703

COPYRIGHT, 2019 GTM ARCHITECTS, INC.

FILE NAME:

5 4 3 2 1

D C B A

Generated by REScheck-Web Software
Compliance Certificate

Project 18.0320_19 HIGH ST. LOT 4_GARAGE

Energy Code:	**2018 IECC**
Location:	**Brookeville, Maryland**
Construction Type:	**Single-family**
Project Type:	**New Construction**
Conditioned Floor Area:	**1,940 ft2**
Glazing Area	**4%**
Climate Zone:	**4 (5093 HDD)**
Permit Date:	
Permit Number:	

Construction Site: Owner/Agent: Alabama Designer/Contractor: Alabama

Compliance: Passes using UA trade-off

Compliance: **0.0% Better Than Code** Maximum UA: **114** Your UA: **114** Maximum SHGC: **0.40** Your SHGC: **0.18**

The % Better or Worse Than Code Index reflects how close to compliance the house is based on code trade-off rules.
It DOES NOT provide an estimate of energy use or cost relative to a minimum-code home.

Slab-on-grade tradeoffs are no longer considered in the UA or performance compliance path in REScheck. Each slab-on-grade assembly in the specified climate zone must meet the minimum energy code insulation R-value and depth requirements.

Envelope Assemblies

Assembly	Gross Area or Perimeter	Cavity R-Value	Cont. R-Value	Prop. U-Factor	Req. U-Factor	Prop. UA	Req. UA
Ceiling: Flat Ceiling or Scissor Truss	411	49.0	0.0	0.026	0.026	11	11
ceiling over garage: Flat Ceiling or Scissor Truss	361	30.0	0.0	0.035	0.026	13	9
Wall: Wood Frame, 16" o.c.	1,215	20.0	0.0	0.059	0.060	67	68
interior door from garage to loft stairs: Solid Door (under 50% glazing)	26			0.290	0.320	7	8
double hung: Wood Frame SHGC: 0.18	11			0.300	0.320	3	4
casements: Wood Frame SHGC: 0.18	44			0.290	0.320	13	14
Floor: Slab-On-Grade (Unheated) Insulation depth: 2.0'	57		10.0	0.700	0.700	0	0

Compliance Statement: The proposed building design described here is consistent with the building plans, specifications, and other calculations submitted with the permit application. The proposed building has been designed to meet the 2018 IECC requirements in REScheck Version : REScheck-Web and to comply with the mandatory requirements listed in the REScheck Inspection Checklist.

Name - Title Signature Date

REScheck Software Version : REScheck-Web
Inspection Checklist

Energy Code: 2018 IECC

Requirements: 0.0% were addressed directly in the REScheck software

Text in the "Comments/Assumptions" column is provided by the user in the REScheck Requirements screen. For each requirement, the user certifies that a code requirement will be met and how that is documented, or that an exception is being claimed. Where compliance is itemized in a separate table, a reference to that table is provided.

Section # & Req.ID	Pre-Inspection/Plan Review	Plans Verified Value	Field Verified Value	Complies?	Comments/Assumptions
103.1, 103.2 [PR1][1]	Construction drawings and documentation demonstrate energy code compliance for the building envelope. Thermal envelope represented on construction documents.			☐Complies ☐Does Not ☐Not Observable ☐Not Applicable	
103.1, 103.2, 403.7 [PR3][1]	Construction drawings and documentation demonstrate energy code compliance for lighting and mechanical systems. Systems serving multiple dwelling units must demonstrate compliance with the IECC Commercial Provisions.			☐Complies ☐Does Not ☐Not Observable ☐Not Applicable	
302.1, 403.7 [PR2][2]	Heating and cooling equipment is sized per ACCA Manual S based on loads calculated per ACCA Manual J or other methods approved by the code official.	Heating: Btu/hr____ Cooling: Btu/hr____	Heating: Btu/hr____ Cooling: Btu/hr____	☐Complies ☐Does Not ☐Not Observable ☐Not Applicable	

Additional Comments/Assumptions:

1 High Impact (Tier 1) 2 Medium Impact (Tier 2) 3 Low Impact (Tier 3)

Section # & Req.ID	Foundation Inspection	Plans Verified Value	Field Verified Value	Complies?	Comments/Assumptions
402.1.2 [FO1][1]	Slab edge insulation R-value.	R-____ ☐ Unheated ☐ Heated	R-____ ☐ Unheated ☐ Heated	☐Complies ☐Does Not ☐Not Observable ☐Not Applicable	*See the Envelope Assemblies table for values.*
402.1.2 [FO3][1]	Slab edge insulation depth/length.	____ ft	____ ft	☐Complies ☐Does Not ☐Not Observable ☐Not Applicable	*See the Envelope Assemblies table for values.*
303.2.1 [FO11][2]	A protective covering is installed to protect exposed exterior insulation and extends a minimum of 6 in. below grade.			☐Complies ☐Does Not ☐Not Observable ☐Not Applicable	
403.9 [FO12][2]	Snow- and ice-melting system controls installed.			☐Complies ☐Does Not ☐Not Observable ☐Not Applicable	

Additional Comments/Assumptions:

1 High Impact (Tier 1) 2 Medium Impact (Tier 2) 3 Low Impact (Tier 3)

Section # & Req.ID	Framing / Rough-In Inspection	Plans Verified Value	Field Verified Value	Complies?	Comments/Assumptions
402.1.1, 402.3.4 [FR1][1]	Door U-factor.	U-____	U-____	☐Complies ☐Does Not ☐Not Observable ☐Not Applicable	*See the Envelope Assemblies table for values.*
402.1.1, 402.3.1, 402.3.3, 402.5 [FR2][1]	Glazing U-factor (area-weighted average).	U-____	U-____	☐Complies ☐Does Not ☐Not Observable ☐Not Applicable	*See the Envelope Assemblies table for values.*
303.1.3 [FR4][1]	U-factors of fenestration products are determined in accordance with the NFRC test procedure or taken from the default table.			☐Complies ☐Does Not ☐Not Observable ☐Not Applicable	
402.4.1.1 [FR23][1]	Air barrier and thermal barrier installed per manufacturer's instructions.			☐Complies ☐Does Not ☐Not Observable ☐Not Applicable	
402.4.3 [FR20][1]	Fenestration that is not site built is listed and labeled as meeting AAMA /WDMA/CSA 101/I.S.2/A440 or has infiltration rates per NFRC 400 that do not exceed code limits.			☐Complies ☐Does Not ☐Not Observable ☐Not Applicable	
402.4.5 [FR16][2]	IC-rated recessed lighting fixtures sealed at housing/interior finish and labeled to indicate ≤2.0 cfm leakage at 75 Pa.			☐Complies ☐Does Not ☐Not Observable ☐Not Applicable	
403.3.1 [FR12][1]	Supply and return ducts in attics insulated >= R-8 where duct is >= 3 inches in diameter and >= R-6 where < 3 inches. Supply and return ducts in other portions of the building insulated >= R-6 for diameter >= 3 inches and R-4.2 for < 3 inches in diameter.			☐Complies ☐Does Not ☐Not Observable ☐Not Applicable	
403.3.2 [FR13][1]	Ducts, air handlers and filter boxes are sealed with joints/seams compliant with International Mechanical Code or International Residential Code, as applicable.			☐Complies ☐Does Not ☐Not Observable ☐Not Applicable	
403.3.5 [FR15][3]	Building cavities are not used as ducts or plenums.			☐Complies ☐Does Not ☐Not Observable ☐Not Applicable	
403.4 [FR17][2]	HVAC piping conveying fluids above 105 ºF or chilled fluids below 55 ºF are insulated to ≥R-3.	R-____	R-____	☐Complies ☐Does Not ☐Not Observable ☐Not Applicable	
403.4.1 [FR24][1]	Protection of insulation on HVAC piping.			☐Complies ☐Does Not ☐Not Observable ☐Not Applicable	
403.5.3 [FR18][2]	Hot water pipes are insulated to ≥R-3.	R-____	R-____	☐Complies ☐Does Not ☐Not Observable ☐Not Applicable	

1 High Impact (Tier 1) 2 Medium Impact (Tier 2) 3 Low Impact (Tier 3)

Section # & Req.ID	Insulation Inspection	Plans Verified Value	Field Verified Value	Complies?	Comments/Assumptions
303.1 [IN13][2]	All installed insulation is labeled or the installed R-values provided.			☐Complies ☐Does Not ☐Not Observable ☐Not Applicable	
402.1.1, 402.2.5, 402.2.6 [IN3][1]	Wall insulation R-value. If this is a mass wall with at least ½ of the wall insulation on the wall exterior, the exterior insulation requirement applies (FR10).	R-____ ☐ Wood ☐ Mass ☐ Steel	R-____ ☐ Wood ☐ Mass ☐ Steel	☐Complies ☐Does Not ☐Not Observable ☐Not Applicable	*See the Envelope Assemblies table for values.*
303.2 [IN4][1]	Wall insulation is installed per manufacturer's instructions.			☐Complies ☐Does Not ☐Not Observable ☐Not Applicable	

Additional Comments/Assumptions:

1 High Impact (Tier 1) 2 Medium Impact (Tier 2) 3 Low Impact (Tier 3)

WINDOW/DOORS THERMAL DATA

THERMAL PERFORMACE DATA FOR DOORS & WINDOWS		
OPENING TYPE	U-VALUE	SHGC
CASEMENT WINDOWS	0.29	0.18
DOUBLE HUNG WINDOWS	0.30	0.18
SLIDING DOORS	0.28	0.19
EXTERIOR INSWINGING DOORS	0.29	0.16
OUT SWINGING PATIO DOORS	0.29	0.16
AWNING WINDOWS	0.29	0.18

THE AREA-WEIGHTED AVERAGE MAXIMUM FENESTRATION U-FACTOR PERMITTED USING TRADE-OFFS FROM SECTION 402.1 IN ZONE 4 SHALL BE .35 FOR VERTICAL FENESTRATION AND .55 FOR SKYLITES

ENERGY CONSERVATION NOTES

1. The following provisions for thermal resistance meet or exceed the requirements stipulated by the International Energy Conservation Code.
2. INSULATION: IRC

CEILING (OF UPPERMOST STORY)	R-49 W/ 500SF R-30 ALLOWANCE, OR R-38 CONTINUOUS
VAULTED CEILING	R-38
EXTERIOR FRAME WALLS	R-20 OR 13+5 (EXTERIOR)
RIM JOISTS	EQUAL TO WALL BELOW
FLOORS OVER UNHEATED SPACES (INCLUDING FLOOR OVERHANGS)	R-38
MASONRY WALLS (ENCLOSED HEATED LIVING AREAS)	R-13 OR R-10 CONTINUOUS
SLAB ON GRADE (HEATED SPACE) 24" PERIMETER INSULATION	R-10
WINDOWS	0.35 U FACTOR, 0.40 SHGC
DOORS	SEE SECTION R402.3.4

*ALL VALUES ARE TYPICAL UNLESS NOTED OTHERWISE IN ARCHITECTURAL DRAWINGS

3. Air Infiltration:
A. Windows: not exceeding five tenths (0.5) CFM of sash crack.
B. Sliding Glass Doors: not exceeding five tenths (0.5) CFM per foot of door area.
C. Swinging Doors: not exceeding one and twenty-five hundredths (1.25) CFM per square foot of door area.
Provide 1" fiberglass sill sealer between foundation wall and all sill plates.
D. In order to seal between dissimilar materials to allow for differential expansion and contraction, the following shall be caulked, gasketed, weatherstripped or otherwise sealed with an air barrier material, suitable film or solid material:
1. All joints, seams, and penetrations
2. Site-built windows, doors, and skylites
3. Openings between window and door assemblies and their respective jambs & framing
4. Utility penetrations
5. Dropped ceilings or chases adjacent to the thermal envelope
6. Knee walls
7. Walls and ceilings separating a garage from conditioned spaces
8. Behind tubs and showers on exterior walls
9. Common walls between dwelling units
10. Attic access openings
11. Rim joist junction
12. Other sources of inflitration

Section # & Req.ID	Insulation Inspection	Plans Verified Value	Field Verified Value	Complies?	Comments/Assumptions
303.1 [IN13][2]	All installed insulation is labeled or the installed R-values provided.			☐Complies ☐Does Not ☐Not Observable ☐Not Applicable	
402.1.1, 402.2.5, 402.2.6 [IN3][1]	Wall insulation R-value. If this is a mass wall with at least ½ of the wall insulation on the wall exterior, the exterior insulation requirement applies (FR10).	R-____ ☐ Wood ☐ Mass ☐ Steel	R-____ ☐ Wood ☐ Mass ☐ Steel	☐Complies ☐Does Not ☐Not Observable ☐Not Applicable	*See the Envelope Assemblies table for values.*
303.2 [IN4][1]	Wall insulation is installed per manufacturer's instructions.			☐Complies ☐Does Not ☐Not Observable ☐Not Applicable	

Additional Comments/Assumptions:

1 High Impact (Tier 1) 2 Medium Impact (Tier 2) 3 Low Impact (Tier 3)

Project Title: 18.0320_19 HIGH ST. LOT 4_GARAGE Report date: 04/13/22
Data filename: Page 6 of 9

Section # & Req.ID	Final Inspection Provisions	Plans Verified Value	Field Verified Value	Complies?	Comments/Assumptions
402.1.1, 402.2.1, 402.2.2, 402.2.6 [FI1][1]	Ceiling insulation R-value.	R-____ ☐ Wood ☐ Steel	R-____ ☐ Wood ☐ Steel	☐Complies ☐Does Not ☐Not Observable ☐Not Applicable	*See the Envelope Assemblies table for values.*
303.1.1.1, 303.2 [FI2][1]	Ceiling insulation installed per manufacturer's instructions. Blown insulation marked every 300 ft².			☐Complies ☐Does Not ☐Not Observable ☐Not Applicable	
402.2.3 [FI22][2]	Vented attics with air permeable insulation include baffle adjacent to soffit and eave vents that extends over insulation.			☐Complies ☐Does Not ☐Not Observable ☐Not Applicable	
402.2.4 [FI3][1]	Attic access hatch and door insulation ≥R-value of the adjacent assembly.	R-____	R-____	☐Complies ☐Does Not ☐Not Observable ☐Not Applicable	
402.4.1.2 [FI17][1]	Blower door test @ 50 Pa. <=5 ach in Climate Zones 1-2, and <=3 ach in Climate Zones 3-8.	ACH 50 =____	ACH 50 =____	☐Complies ☐Does Not ☐Not Observable ☐Not Applicable	
403.3.3 [FI27][1]	Ducts are pressure tested to determine air leakage with either: Rough-in test: Total leakage measured with a pressure differential of 0.1 inch w.g. across the system including the manufacturer's air handler enclosure if installed at time of test. Postconstruction test: Total leakage measured with a pressure differential of 0.1 inch w.g. across the entire system including the manufacturer's air handler enclosure.	____ cfm/100 ft²	____ cfm/100 ft²	☐Complies ☐Does Not ☐Not Observable ☐Not Applicable	
403.3.4 [FI4][1]	Duct tightness test result of <=4 cfm/100 ft2 across the system or <=3 cfm/100 ft2 without air handler @ 25 Pa. For rough-in tests, verification may need to occur during Framing Inspection.	____ cfm/100 ft²	____ cfm/100 ft²	☐Complies ☐Does Not ☐Not Observable ☐Not Applicable	
403.3.2.1 [FI24][1]	Air handler leakage designated by manufacturer at <=2% of design air flow.			☐Complies ☐Does Not ☐Not Observable ☐Not Applicable	
403.1.1 [FI9][2]	Programmable thermostats installed for control of primary heating and cooling systems and initially set by manufacturer to code specifications.			☐Complies ☐Does Not ☐Not Observable ☐Not Applicable	
403.1.2 [FI10][2]	Heat pump thermostat installed on heat pumps.			☐Complies ☐Does Not ☐Not Observable ☐Not Applicable	
403.5.1 [FI11][2]	Circulating service hot water systems have automatic or accessible manual controls.			☐Complies ☐Does Not ☐Not Observable ☐Not Applicable	

1 High Impact (Tier 1) 2 Medium Impact (Tier 2) 3 Low Impact (Tier 3)

Section # & Req.ID	Final Inspection Provisions	Plans Verified Value	Field Verified Value	Complies?	Comments/Assumptions
403.6.1 [FI25][2]	All mechanical ventilation system fans not part of tested and listed HVAC equipment meet efficacy and air flow limits per Table R403.6.1.			☐Complies ☐Does Not ☐Not Observable ☐Not Applicable	
403.2 [FI26][2]	Hot water boilers supplying heat through one- or two-pipe heating systems have outdoor setback control to lower boiler water temperature based on outdoor temperature.			☐Complies ☐Does Not ☐Not Observable ☐Not Applicable	
403.5.1.1 [FI28][2]	Heated water circulation systems have a circulation pump. The system return pipe is a dedicated return pipe or a cold water supply pipe. Gravity and thermos-syphon circulation systems are not present. Controls for circulating hot water system pumps start the pump with signal for hot water demand within the occupancy. Controls automatically turn off the pump when water is in circulation loop is at set-point temperature and no demand for hot water exists.			☐Complies ☐Does Not ☐Not Observable ☐Not Applicable	
403.5.1.2 [FI29][2]	Electric heat trace systems comply with IEEE 515.1 or UL 515. Controls automatically adjust the energy input to the heat tracing to maintain the desired water temperature in the piping.			☐Complies ☐Does Not ☐Not Observable ☐Not Applicable	
403.5.2 [FI30][2]	Demand recirculation water systems have controls that manage operation of the pump and limit the temperature of the water entering the cold water piping to <= 104ºF.			☐Complies ☐Does Not ☐Not Observable ☐Not Applicable	
403.5.4 [FI31][2]	Drain water heat recovery units tested in accordance with CSA B55.1. Potable water-side pressure loss of drain water heat recovery units < 3 psi for individual units connected to one or two showers. Potable water-side pressure loss of drain water heat recovery units < 2 psi for individual units connected to three or more showers.			☐Complies ☐Does Not ☐Not Observable ☐Not Applicable	
404.1 [FI6][1]	90% or more of permanent fixtures have high efficacy lamps.			☐Complies ☐Does Not ☐Not Observable ☐Not Applicable	
404.1.1 [FI23][3]	Fuel gas lighting systems have no continuous pilot light.			☐Complies ☐Does Not ☐Not Observable ☐Not Applicable	
401.3 [FI7][2]	Compliance certificate posted.			☐Complies ☐Does Not ☐Not Observable ☐Not Applicable	

1 High Impact (Tier 1) 2 Medium Impact (Tier 2) 3 Low Impact (Tier 3)

Section # & Req.ID	Final Inspection Provisions	Plans Verified Value	Field Verified Value	Complies?	Comments/Assumptions
303.3 [FI18][3]	Manufacturer manuals for mechanical and water heating systems have been provided.			☐Complies ☐Does Not ☐Not Observable ☐Not Applicable	

Additional Comments/Assumptions:

1 High Impact (Tier 1) 2 Medium Impact (Tier 2) 3 Low Impact (Tier 3)

2018 IECC Energy Efficiency Certificate

Insulation Rating	R-Value	
Above-Grade Wall	20.00	
Below-Grade Wall	0.00	
Floor	10.00	
Ceiling / Roof	49.00	
Ductwork (unconditioned spaces):	____	
Glass & Door Rating	**U-Factor**	**SHGC**
Window	0.29	0.18
Door	0.29	
Heating & Cooling Equipment	**Efficiency**	
Heating System:____________	____	
Cooling System:____________	____	
Water Heater:____________	____	

Name: ____________ **Date:**________

Comments

HVAC SYSTEMS & WATER HEATING

1. HEATING & COOLING EQUIP. CONTROLS. AT LEAST ONE PRE-PROGRAMMED PROGRAMMABLE THERMOSTAT IS REQUIRED WHEN USING A FORCED AIR SYSTEM. SEPARATE THERMOSTATS ARE REQUIRED FOR EACH HEATING/COOLING ZONE IN THE DWELLING.

2. DUCT INSULATION. SUPPLY DUCTS LOCATED OUTSIDE THE BUILDING THERMAL ENVELOPE SHALL BE INSULATED TO MINIMUM R-8, ALL OTHER DUCTS INSULATED TO A MINIMUM OF R-6

3. DUCT SEALING. ALL DUCTS, AIR HANDLERS, FILTER BOXES, & BUILDING CAVITIES MUST BE SEALED. JOINTS & SEAMS SHALL COMPLY W/ M1606.4.1 IRC

4. MECHANICAL SYSTEM PIPING INSULATION. R-3 FOR PIPING CARRYING FLUIDS AT >105°F OR <55°F IS REQUIRED

5. MECHANICAL VENTILATION. OUTDOOR AIR INTAKES OR EXHAUSTS SHALL HAVE DAMPERS

6. SERVICE WATER HEATING. PIPING IN THE CIRCULATING HOT WALTER SYSTEM SHALL BE INSULATED TO AN R-3 AND SYSTEM TO INCLUDE MANUAL OR AUTOMATIC SWITCH THAT CAN TURN OFF THE SYSTEM WHEN IT IS NOT USED, WATER HEATERS WITH PIPE RISERS SHALL HAVE HEAT TRAPS ON BOTH INLET AND OUTLET OF WATER HEATER UNLESS THE WATER HEATER HAS INTEGRAL HEAT TRAPS OR IS PART OF A CIRCULATION SYSTEM. TYPICAL METHODS USED FOR CREATING HEAT TRAPS ARE "U" OR "RAMS HORN" BENDS IN THE FLEXIBLE PIPE CONNECTORS OR INSTALLING AFTERMARKET PIPE NIPPLES WITH INTEGRAL TRAPS.

7. EQUIPMENT SIZING. HEATING AND COOLING EQUIPMENT SHALL BE SIZED BASED ON BUILDING LOADS CALCULATED IN ACCORDANCE WITH ACCA (AIR CONDITIONING CONTRACTORS OF AMERICA) MANUAL-J, A SIMPLIFIED METHOD OF CALCULATING HEATING AND COOLING LOADS. THE MANUAL-J CALCULATIONS SHALL BE SUBMITTED UPON APPLICATION FOR THE MECHANICAL PERMIT.

SECTION 302.1 OF IECC SPECIFIES THE INTERIOR DESIGN TEMPERATURES USED FOR HEATING AND COOLING LOAD CALCULATIONS AS MAXIMUM OF 72°F FOR HEATINGAND MINIMUM 75°F FOR COOLING.

LEGEND

INSULATION PERIMETER

AREA OF INSULATION ABOVE OR BELOW AS INDICATED

GTM ARCHITECTS

7735 OLD GEORGETOWN ROAD
SUITE 700
BETHESDA, MD 20814
(240)333-2000
(240)333-2001 FAX
WWW.GTMARCHITECTS.COM

GTM

Seal

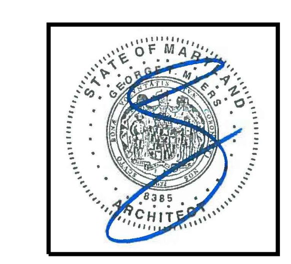

I certify that these documents were prepared or approved by me, and that I am a duly licensed architect under the laws of the State of Maryland, license number 8385, Expiration Date: 12-06-2022.

Consultant

Project
19 HIGH ST LOT 4

Owner

Developer

PERMIT SET	04/11/2022
Issue Description	*Date*

GTM Project No.	18.0320
Checked By	GTM
Drawn By	LEO/NW
Scale	AS NOTED

Sheet Title

RESCHECK REPORT

Sheet No.

A704

COPYRIGHT, 2019 GTM ARCHITECTS, INC.

FILE NAME:

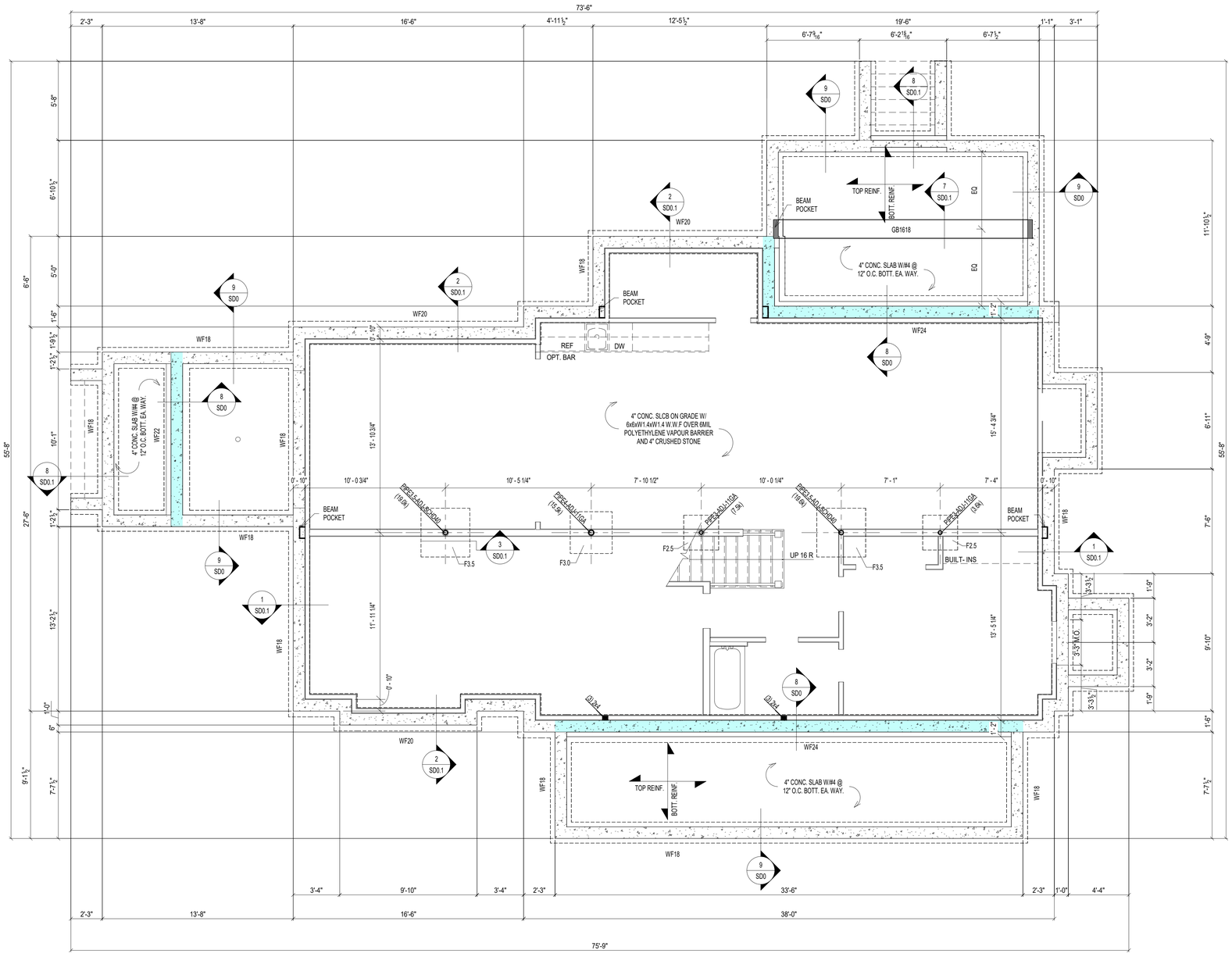

1 S0 FOUNDATION PLAN
SCALE: 1/4" = 1'-0"

LEGENDS:

TS = THICKENED SLAB
WF = WALL FOOTING
F = FOOTING

FOUNDATION NOTES:

1. FOUNDATION DESIGN IS BASED ON ASSUMED DESIGN CRITERIA AS SPECIFIED ON GENERAL NOTES SHEET. AND SHALL BE FIELD VERIFIED BY GEOTECHNICAL ENGINEER. NOTIFY ENGINEER IF ANY DESCRIPANCIES ARE FOUND OR CRITERIA DIFFERS FROM ASSUMED CRITERIA.
2. VERIFY AND COORDINATE ALL DIMENSIONS WITH ARCHITECTURAL AND CIVIL DRAWINGS. NOTIFY ENGINEER IF ANY COORINDATION IS REQUIRED.
3. BASEMENT SLAB SHALL BE 4" CONC. SLAB ON GRADE WITH 6x6xW1.4xW1.4 W.W.F U.N.O.
4. ALL EXTERIOR FOOTINGS SHALL BE LOWERED TO MINIMUM FROST DEPTH AS REQUIRED BY LOCAL JURISDICTIONS.
5. PROVIDE MIN. 3'-0"x3'-0"x12" CONC. FOOTING W/ #5 @ 12" O.C. BOTT. EA. WAY. UNDER EACH POST UNLESS NOTED OTHERWISE ON FOUDATION PLAN.
6. PROVIDE MIN. 16"x12" CONC. THICKENED SLAB UNDER BEARING WALLS UNLESS NOTED OTHERWISE.
7. PROVIDE MIN. 24"x8" CONC. WALL FOOTING W/ MIN. (2) #4 CONT. AT BOTT. UNDER ALL FOUNDATION WALLS UNLESS NOTED OTHERWISE.
8. PROVIDE WATERPROOFING, DAMP PROOFING PER APPLICABLE CODES AT FOUNDATION WALL, FOOTINGS AND SLABS.
9. INSTALL CONTINUOUS 4"Ø PERFORATED DRAIN PIPES ON EACH SIDE OF FOOTING. CONNECTED WITH 1 1/2"Ø WEEP HOLES @ 8'-0" O.C. AND DRAIN TO SUMP PUMP OR DAY LIGHT.

PLAN LEGENDS & SYMBOLS:

- INDICATES BEARING WALL
- INDICATES DRAIN HOLE FROM ABOVE
- INDICATES JOIST/TRUSS HANEGR (REFER TO SHOP DWGS)
- INDICATES FRAMING DIRECTION
- INDICATES REBAR DIRECTION
- (_J+_S) — INDICATES NO. OF KING STUDS AT EACH END; INDICATES NO. OF JACK STUDS AT EACH END
- WF?? — INDICATES WALL FOOTING; WIDTH OF WALL FOOTING IN INCHES
- TS?? — INDICATES THICKENED SLAB; WIDTH OF THICKENED SLAB IN INCHES
- F.x.x — INDICATES ISOLATED COLUMN FOOTING; INDICATES SIZE OF FOOTING IN DECIMAL FEET
- ML?? — MICROLAM LVL 2.0E; DEPTH OF MICROLAM LVL IN INCHES
- LSL?? — LAMINATED STRAND LUMBER 1.7E; DEPTH OF TIMBERSTAND LSL BEAM IN INCHES
- PSL?? — PARALLAM STRAND LUMBER 2.0E; WIDTHxDEPTH OF MEMBER
- CC — COLUMN CAP
- CB — COLUMN BASE
- HD — HOLD DOWN ANCHOR
- MS — METAL STRAP
- H — JOIST/TRUSS/BEAM HANGER
- HC — HURRICANE CLIPS

COLUMN FOOTING SCHEDULE

MARK	DESCRIPTION
F2.5	2'-6" x 2'-6" x 12" CONC. FTG W/ #4 @ 12" O.C. BOTT. EA. WAY
F3.0	3'-0" x 3'-0" x 12" CONC. FTG W/ #4 @ 12" O.C. BOTT. EA. WAY
F3.5	3'-6" x 3'-6" x 12" CONC. FTG W/ #4 @ 12" O.C. BOTT. EA. WAY

CONCRETE GRADE BEAM SCHEDULE

MARK	DESCRIPTION
GB1618	16" x 18" CONC. GRADE BEAM W/ (4) #5 CONT. @ BOTT.

CONCRETE LINTEL SCHEDULE

MARK	DESCRIPTION
CB812	8" x 12" CONC. LINTEL W/ (2) #5 CONT. @ BOTT.

WALL FOOTING SCHEDULE

MARK	DESCRIPTION
WF18	18" x 8" CONC. FTG. W/ (2) #4 CONT. @ BOTT.
WF20	20" x 8" CONC. FTG. W/ (2) #4 CONT. @ BOTT.
WF22	22" x 8" CONC. FTG. W/ (2) #4 CONT. @ BOTT.
WF24	24" x 8" CONC. FTG. W/ (2) #4 CONT. @ BOTT.

BASEMENT FOUNDATION WALL SCHEDULE (MAX. UNSPPORTED HEIGHT = 9'-0")

THICKNESS	UNBALANCED BACK FILL HEIGHT	VERTICAL REBARS (E.F.P. = 30 PSF/FT)	VERTICAL REBARS (E.F.P. = 45 PSF/FT)	VERTICAL REBARS (E.F.P. = 60 PSF/FT)	HORIZONTAL REBARS
8"	UP TO 5'-0"	NOT REQD.	NOT REQD.	NOT REQUIRED	#4 @ 24" O.C.
	5'-0" < HT < 6'-0"	NOT REQD.	NOT REQD.	#5 @ 36" O.C.	
	6'-0" < HT < 7'-0"	NOT REQD.	#5 @ 36" O.C.	#5 @ 24" O.C.	
	7'-0" < HT < 8'-0"	#4 @ 24" O.C.	#5 @ 24" O.C.	#5 @ 20" O.C.	
	8'-0" < HT < 9'-0"	#4 @ 18" O.C.	#5 @ 20" O.C.	#5 @ 16" O.C.	

NOTE:
1. BASED ON TABLE 3.12 OF PCA-100 "PRESCRIPTIVE DESIGN OF EXTERIOR CONCRETE WALLS" WITH FOLLOWING CRITERIA
2. f'C' = 3000 psi & Fy = 60000 ksi
3. E.F.P. = EQUIVALENT EARTH PRESSURE
4. MAXIMUM WALL HEIGHT = 9'-0"
5. MIN. COVER TO REINFORCEMENT AT INSIDE FACE = 3/4" & MIN. COVER TO REINFORCEMENT AT OUTSIDE FACE = 1 1/2"
6. PROVIDE MINIMUM ONE #4 REBAR 12" FROM TOP & BOTTOM.
7. PROVIDE PROPER DRAINAGE TO THE BACKFILL REFER TO ARCHITECTURAL DRAWINGS FOR DRAINAGE AND WATEPROOFING
8. REFER TO GEOTECHNICAL REPORT FOR ALL FURTHER RECOMMENDATIONS. GEOTECHNICAL ENGINEER TO VERIFY FOUNDATION DESIGN CRITERIA FOR SOIL BEARING CAPACTY AND EARTH PRESSURE.
9. REBARS CAN BE SUBSTITUTED WITH #4 REBARS TO MATCH SPECIFIED AREA OF REINFORCEMENT IN ABOVE TABLE

BASEMENT FOUNDATION WALL SCHEDULE (MAX. UNSPPORTED HEIGHT = 9'-0")

THICKNESS	UNBALANCED BACK FILL HEIGHT	VERTICAL REBARS (E.F.P. = 30 PSF/FT)	VERTICAL REBARS (E.F.P. = 45 PSF/FT)	VERTICAL REBARS (E.F.P. = 60 PSF/FT)	HORIZONTAL REBARS
10"	UP TO 6'-0"	NOT REQD.	NOT REQD.	NOT REQD.	#4 @ 24" O.C.
	6'-0" < HT < 7'-0"	NOT REQD.	NOT REQD.	#4 @ 24" O.C.	
	7'-0" < HT < 8'-0"	NOT REQD.	#4 @ 18" O.C.	#4 @ 16" O.C.	
	8'-0" < HT < 9'-0"	NOT REQD.	#4 @ 16" O.C.	#4 @ 12" O.C.	

NOTE:
1. BASED ON TABLE A.4 OF ACI 332-10 WITH FOLLOWING CRITERIA
2. f'C' = 3000 psi & Fy = 60000 ksi
3. E.F.P. = EQUIVALENT EARTH PRESSURE
4. MAXIMUM WALL HEIGHT = 9'-0"
5. MIN. COVER TO REINFORCEMENT AT INSIDE FACE = 3/4" & MIN. COVER TO REINFORCEMENT AT OUTSIDE FACE = 1 1/2"
6. PROVIDE MINIMUM ONE #4 REBAR 12" FROM TOP & BOTTOM.
7. PROVIDE PROPER DRAINAGE TO THE BACKFILL REFER TO ARCHITECTURAL DRAWINGS FOR DRAINAGE AND WATEPROOFING
8. REFER TO GEOTECHNICAL REPORT FOR ALL FURTHER RECOMMENDATIONS. GEOTECHNICAL ENGINEER TO VERIFY FOUNDATION DESIGN CRITERIA FOR SOIL BEARING CAPACTY AND EARTH PRESSURE.

© COPYRIGHT 2016
Structural Engineering content of this drawings are property of structBIM LLC and are issued for this project only. Any re-use or re-production of these drawings shall not be done without written consent of structBIM LLC. These drawings are to be read in conjuction with project specifications and drawings from other consultants. These drawings shall not be used as shop drawings. Do not scale drawings, use dimensions as specified.

GTM ARCHITECTS

7735 OLD GEORGETOWN ROAD
SUITE 700
BETHESDA, MD 20814
(240)333-2000
(240)333-2001 FAX
WWW.GTMARCHITECTS.COM

GTM

Seal

STATE OF MARYLAND · KIMBERLY A. KANE · 40082 · PROFESSIONAL ENGINEER

Consultant

structBIM ENGINEERS
WE DESIGN....WE BIM
46400 BENEDICT DR, SUITE #211
PHONE: 703-657-4481
E-MAIL: info@structBIM.com

Project

19 HIGH STREET LOT 4
BROOKVILLE, MD

LOT 4

I certify that these documents were prepared or approved by me, and that I am a duly licensed Professional Engineer under the laws of the State of Maryland, license number 40082, Expiration Date: 02-13-2023.

Issue Description	*Date*

structBIM Project No.	22-0165
Checked By	KK
Drawn By	KK
Scale	1/4" = 1'-0"

Sheet Title

FOUNDATION PLAN

Sheet No.

S0

COPYRIGHT, 2016 structBIMEngineers, LLC.
PLOTTED ON: 4/15/2022 12:51:35 PM

FILE NAME:

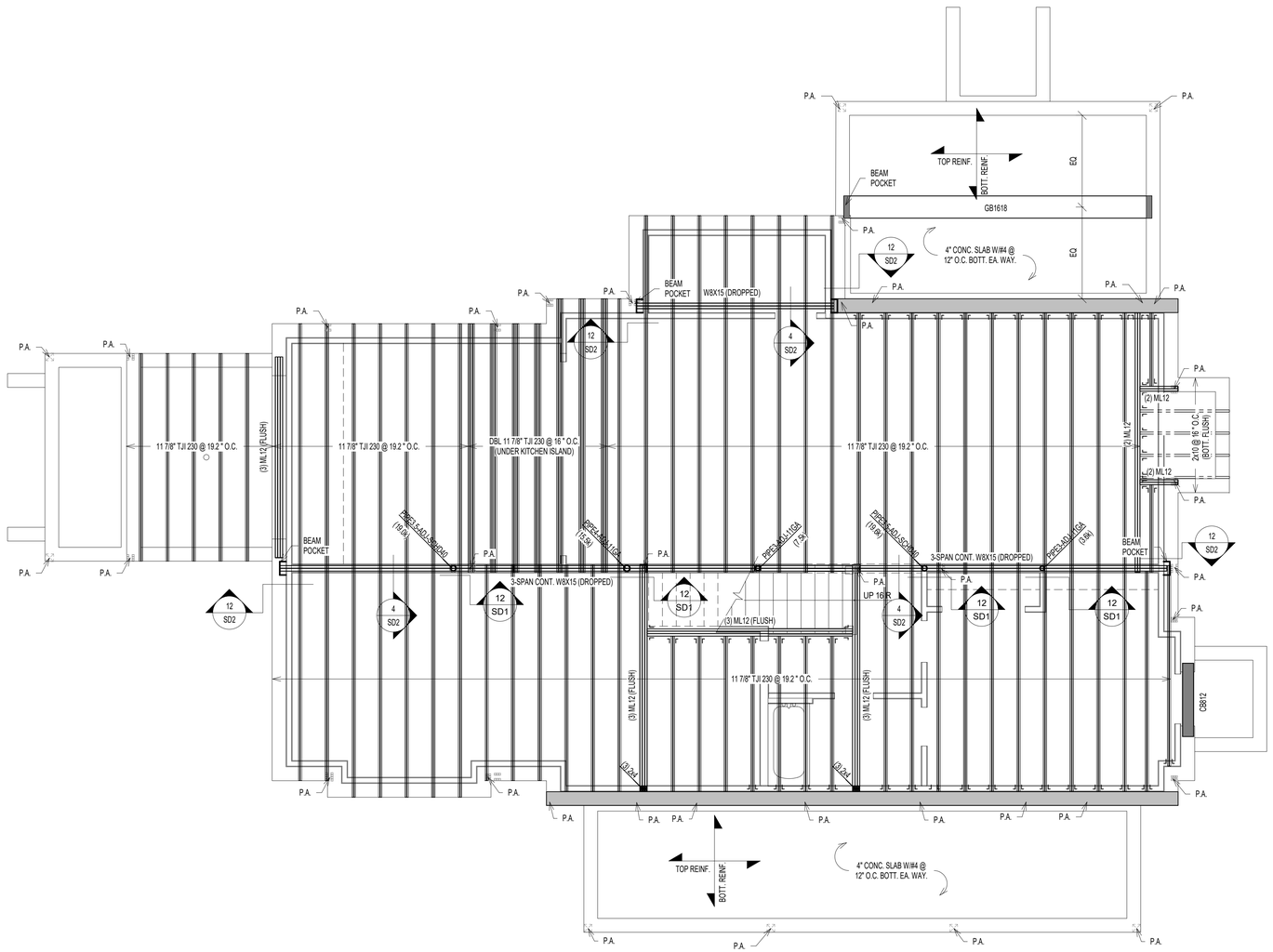

1 S1 FIRST FLOOR FRAMING PLAN
SCALE: 1/4" = 1'-0"

NOTES:

1. FLOOR JOISTS SHALL BE SPACED @ 16" O.C. UNLESS NOTED OTHERWISE.
2. (J) INDICATED JACK STUDS & (S) INDICATES KING STUDS. EXAMPLE: 1J+1S = ONE JACK STUD & ONE KING STUD AT EACH END OF SPECIFIED HEADER.
3. FLOOR SHEATHING SHALL BE 3/4" APA RATED 3/4" T&G PLYWOOD WITH SPAN RATING OF 48/24 OR STURD-I-FLOOR WITH 24" O.C. GRADE.
4. WALL SHEATHING SHALL BE 7/16" APA RATED OSB/PLYWOOD CONTINUOUS SHEATHING W/ 8d NAILS @ 6" O.C.ON EDGES AND 12" O.C. IN-FIELD.
5. INSTALL BRIDGING BETWEEN JOISTS AT MID-SPAN OR AS REQUIRED PER MANUFACTURER BRIDGING BETWEEN JOISTS UNDER KITCHEN PLATFORMS AND CERAMIC TILE AREAS FOR MIN.THREE JOIST BAYS @ 8'-0" O.C. MAX.
6. FLOOR JOISTS SHALL HAVE 1/2" GYPSUM BOARD CEILING ATTACHED DIRECTLY TO UNDERSIDE OF BOTTOM FLANGE OF JOIST. NOTIFY ENGINEER OF ANY UNFINISHED AREAS.
7. ALL JOISTS ARE DESIGNED PER MIN. PRO RATING (BASED ON iLEVEL WEYERHAEUSER PRO RATING CRITERIA) CRITERIA OF 38. NOTIFY ENGINEER, IF HIGHER PRO RATING IS REQUIRED.
8. INSTALL SQUASH BLOCKS AT EVERY BEARING LOCATION AND PROVIDE SOLID BLOCKING UNDER EVERY BEARING WALL FROM ABOVE AT ALL I JOISTS.
9. PROVIDE JOISTS AT MAX. 16" O.C. SPACING UNDER CERAMIC TILE AREAS. JOIST MANUFACTURER TO DESIGN JOISTS FOR DEFLECTION LIMIT OF L/720 OR 0.3" MAX. COORDINATE LOCATION OF CERAMIC TILE AREAS WITH ARCHITECTURAL DRAWINGS.
10. PROVIDE DOUBLE JOISTS UNDER KITCHEN ISLANDS, OVERSIZED BATH TUBS.
11. WEB STIFFENERS ARE REQUIRED WHEN INTERMEDIATE BEARING LENGTH IS LESS THAN 5 1/4" AND SPAN ON EITHER SIDE OF BEARING IS LARGER THAN REQUIRED PER JOIST MANUFACTURER.
12. PROTECT ALL UNTREATED WOOD FROM DIRECT CONTACT WITH CONCRETE OR MASONRY.
13. PROVIDE SQUASH BLOCKS ON BOTH SIDES AT BEARING WALL LOCATIONS WITH ONE 10d NAILS AT EACH FLANGE.
14. PROVIDE BLOCKING PANELS PER MANUFACTURER'S SPECIFICATIONS, IF JOISTS ARE SUPPORTING SHEAR WALL FROM ABOVE.
15. PROVIDE SOLID BLOCKING BETWEEN JOISTS WHEN SUPPORTING BEARING WALL FROM ABOVE.
16. PROVIDE BACKER/FILLER BLOCKS AS RECOMMENDED BY JOIST MANUFACTURER AT CONNECTION LOCATIONS OR MULTIPLE JOISTS SUPPORTING POSTS FROM ABOVE.
17. DO NOT CUT HOLES OR NOTCHES WITHOUT PRIOR APPROVAL FROM ENGINEER OR JOIST MANUFACTURER.
18. PROVIDE SOLID BLOCKING OF SAME SIZE WITHIN FLOOR SYSTEM UNDER ALL JACK STUDS, KING STUDS & POSTS FROM ABOVE.
19. PROVIDE MIN. (2) 2x12 UP TO 4'-0" SPAN, (2) ML10 FOR 4'-0" TO 6'-0" SPAN, (2) ML12 6'-0" TO 9'-0" SPAN WHERE BEAM SIZES ARE NOT SPECIFIED ON PLANS. ANY SPANS LARGER THAN 9'-0" SUPPORITNG FRAMING AND NOT SPECIFIED ON PLANS SHALL BE NOTIFIED TO ENGINEER IMMEDIATELY.
20. PROVIDE MIN. DOUBLE JOISTS OR SPECIAL FLOOR TRUSS UNDER (2) 2x POSTS AND (2) PLY MICROLAM LVL OR SPECIAL FLOOR TRUSS TO MATCH FLOOR THICKNESS UNDER (3) 2x POSTS UNLESS NOTED OTHERWISE ON THE PLAN. CONTRACTOR SHALL NOTIFY ENGINEER FOR SUPPORTING STRUCTURAL MEMBER FOR ALL OTHER POST SIZES COMING FROM ABOVE.
21. PROVIDE MIN. (3) 2x POST UNDER BEAMS UNLESS NOTED OTHERWISE.
22. ALL POSTS SHALL CONTINUE DOWN TO FOUNDATION OR STRUCTURAL MEMBER SUCH AS BEAM/GIRDER TRUSS BELOW.
23. PROVIDE MIN. 3 JACK STUDS + 2 KING STUDS AT ALL HEADERS UNLESS NOTED OTHERWISE.
24. ALL WALL STUDS SHALL SPF#2 AND SHALL BE SPACED AT MAX. 16" O.C. UNLESS NOTED OTHERWISE.
25. ALL TWO STORY HIGH WALLS SHALL BE (2) 2x6 SPF#2 BALLOON FRAMED UNLESS NOTED OTHERWISE.
26. PROVIDE FULL HEIGHT BLOCKING BETWEEN JOISTS UP TO THREE JOIST BAYS WHERE JOISTS ARE PARALLEL TO FOUNDATION WALL.

PLAN LEGENDS & SYMBOLS:

- INDICATES BEARING WALL
- INDICATES DRAIN HOLE FROM ABOVE
- INDICATES JOIST/TRUSS HANEGR (REFER TO SHOP DWGS)
- INDICATES FRAMING DIRECTION
- INDICATES REBAR DIRECTION
- (_J+_S) — INDICATES NO. OF KING STUDS AT EACH END; INDICATES NO. OF JACK STUDS AT EACH END
- WF?? — INDICATES WALL FOOTING; WIDTH OF WALL FOOTING IN INCHES
- TS?? — INDICATES THICKENED SLAB; WIDTH OF THICKENED SLAB IN INCHES
- F.x.x — INDICATES ISOLATED COLUMN FOOTING; INDICATES SIZE OF FOOTING IN DECIMAL FEET
- ML?? — MICROLAM LVL 2.0E; DEPTH OF MICROLAM LVL IN INCHES
- LSL?? — LAMINATED STRAND LUMBER 1.7E; DEPTH OF TIMBERSTAND LSL BEAM IN INCHES
- PSL?? — PARALLAM STRAND LUMBER 2.0E; WIDTHxDEPTH OF MEMBER
- CC — COLUMN CAP
- CB — COLUMN BASE
- HD — HOLD DOWN ANCHOR
- MS — METAL STRAP
- H — JOIST/TRUSS/BEAM HANGER
- HC — HURRICANE CLIPS

MICROLAM LVL BEAM SCHEDULE

MARK	DESCRIPTION
(2) ML10	(2) 1 3/4" x 9 1/2" LVL - 1.9E
(2) ML12	(2) 1 3/4" x 11 7/8" LVL - 1.9E
(3) ML10	(3) 1 3/4" x 9 1/2" LVL - 1.9E
(3) ML12	(3) 1 3/4" x 11 7/8" LVL - 1.9E
(3) ML16	(3) 1 3/4" x 16" LVL - 1.9E
(4) ML12	(4) 1 3/4" x 11 7/8" LVL - 1.9E

PARALLAM PSL POST SCHEDULE

MARK	DESCRIPTION
PSL66	5 1/4" x 5 1/4" PSL 1.8E

STEEL COLUMN SCHEDULE

MARK	DESCRIPTION
PIPE3-ADJ-11GA	3"Ø x 11 GA. ADJUSTABLE STEEL PIPE COLUMN
PIPE3.5-ADJ-SCHD40	3 1/2"Ø (O.D.) SCHEDULE 40 ADJUSTABLE STEEL PIPE COLUMN
PIPE4-ADJ-11GA	4"Ø x 11GA. ADJUSTABLE STEEL PIPE COLUMN

© COPYRIGHT 2016
Structural Engineering content of this drawings are property of structBIM LLC and are issued for this project only. Any re-use or re-production of these drawings shall not be done without written consent of structBIM LLC. These drawings are to be read in conjuction with project specifications and drawings from other consultants. These drawings shall not be used as shop drawings. Do not scale drawings, use dimensions as specified.

GTM ARCHITECTS

7735 OLD GEORGETOWN ROAD
SUITE 700
BETHESDA, MD 20814
(240)333-2000
(240)333-2001 FAX
WWW.GTMARCHITECTS.COM

GTM

Seal

STATE OF MARYLAND — KRISHNA KANDEL — 40082 — PROFESSIONAL ENGINEER

Consultant

structBIM ENGINEERS
WE DESIGN....WE BIM
46400 BENEDICT DR, SUITE #211
PHONE: 703-657-4481
E-MAIL: info@structBIM.com

Project

19 HIGH STREET LOT 4
BROOKVILLE, MD

LOT 4

I certify that these documents were prepared or approved by me, and that I am a duly licensed Professional Engineer under the laws of the State of Maryland, license number 40082, Expiration Date: 02-13-2023.

Issue Description	*Date*

structBIM Project No.	22-0165
Checked By	KK
Drawn By	KK
Scale	1/4" = 1'-0"

Sheet Title
FIRST FLOOR FRAMING PLAN

Sheet No.

S1

COPYRIGHT, 2016 structBIMEngineers, LLC.
PLOTTED ON: 4/15/2022 12:51:38 PM

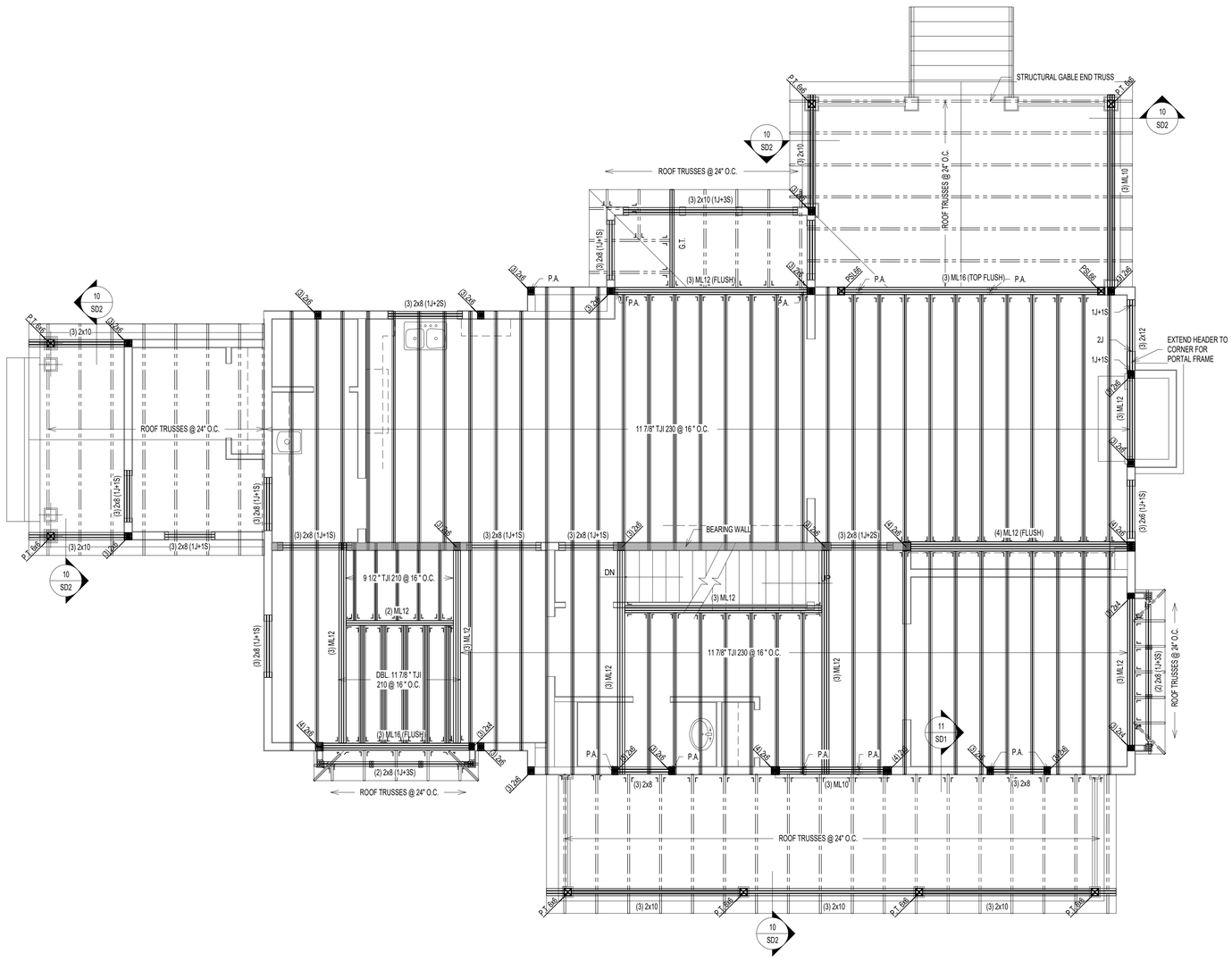

1 / S2 SECOND FLOOR FRAMING PLAN
SCALE: 1/4" = 1'-0"

NOTES:

1. FLOOR JOISTS SHALL BE SPACED @ 16" O.C. UNLESS NOTED OTHERWISE.
2. (J) INDICATED JACK STUDS & (S) INDICATES KING STUDS. EXAMPLE: 1J+1S = ONE JACK STUD & ONE KING STUD AT EACH END OF SPECIFIED HEADER.
3. FLOOR SHEATHING SHALL BE 3/4" APA RATED 3/4" T&G PLYWOOD WITH SPAN RATING OF 48/24 OR STURD-I-FLOOR WITH 24" O.C. GRADE.
4. WALL SHEATHING SHALL BE 7/16" APA RATED OSB/PLYWOOD CONTINUOUS SHEATHING W/ 8d NAILS @ 6" O.C.ON EDGES AND 12" O.C. IN-FIELD.
5. INSTALL BRIDGING BETWEEN JOISTS AT MID-SPAN OR AS REQUIRED PER MANUFACTURER BRIDGING BETWEEN JOISTS UNDER KITCHEN PLATFORMS AND CERAMIC TILE AREAS FOR MIN.THREE JOIST BAYS @ 8'-0" O.C. MAX.
6. FLOOR JOISTS SHALL HAVE 1/2" GYPSUM BOARD CEILING ATTACHED DIRECTLY TO UNDERSIDE OF BOTTOM FLANGE OF JOIST. NOTIFY ENGINEER OF ANY UNFINISHED AREAS.
7. ALL JOISTS ARE DESIGNED PER MIN. PRO RATING (BASED ON iLEVEL WEYERHAEUSER PRO RATING CRITERIA) CRITERIA OF 38. NOTIFY ENGINEER, IF HIGHER PRO RATING IS REQUIRED.
8. INSTALL SQUASH BLOCKS AT EVERY BEARING LOCATION AND PROVIDE SOLID BLOCKING UNDER EVERY BEARING WALL FROM ABOVE AT ALL I JOISTS.
9. PROVIDE JOISTS AT MAX. 16" O.C. SPACING UNDER CERAMIC TILE AREAS. JOIST MANUFACTURER TO DESIGN JOISTS FOR DEFLECTION LIMIT OF L/720 OR 0.3" MAX. COORDINATE LOCATION OF CERAMIC TILE AREAS WITH ARCHITECTURAL DRAWINGS.
10. PROVIDE DOUBLE JOISTS UNDER KITCHEN ISLANDS, OVERSIZED BATH TUBS.
11. WEB STIFFENERS ARE REQUIRED WHEN INTERMEDIATE BEARING LENGTH IS LESS THAN 5 1/4" AND SPAN ON EITHER SIDE OF BEARING IS LARGER THAN REQUIRED PER JOIST MANUFACTURER.
12. PROTECT ALL UNTREATED WOOD FROM DIRECT CONTACT WITH CONCRETE OR MASONRY.
13. PROVIDE SQUASH BLOCKS ON BOTH SIDES AT BEARING WALL LOCATIONS WITH ONE 10d NAILS AT EACH FLANGE.
14. PROVIDE BLOCKING PANELS PER MANUFACTURER'S SPECIFICATIONS, IF JOISTS ARE SUPPORTING SHEAR WALL FROM ABOVE.
15. PROVIDE SOLID BLOCKING BETWEEN JOISTS WHEN SUPPORTING BEARING WALL FROM ABOVE.
16. PROVIDE BACKER/FILLER BLOCKS AS RECOMMENDED BY JOIST MANUFACTURER AT CONNECTION LOCATIONS OR MULTIPLE JOISTS SUPPORTING POSTS FROM ABOVE.
17. DO NOT CUT HOLES OR NOTCHES WITHOUT PRIOR APPROVAL FROM ENGINEER OR JOIST MANUFACTURER.
18. PROVIDE SOLID BLOCKING OF SAME SIZE WITHIN FLOOR SYSTEM UNDER ALL JACK STUDS, KING STUDS & POSTS FROM ABOVE.
19. PROVIDE MIN. (2) 2x12 UP TO 4'-0" SPAN, (2) ML10 FOR 4'-0" TO 6'-0" SPAN, (2) ML12 6'-0" TO 9'-0" SPAN WHERE BEAM SIZES ARE NOT SPECIFIED ON PLANS. ANY SPANS LARGER THAN 9'-0" SUPPORITNG FRAMING AND NOT SPECIFIED ON PLANS SHALL BE NOTIFIED TO ENGINEER IMMEDIATELY.
20. PROVIDE MIN. DOUBLE JOISTS OR SPECIAL FLOOR TRUSS UNDER (2) 2x POSTS AND (2) PLY MICROLAM LVL OR SPECIAL FLOOR TRUSS TO MATCH FLOOR THICKNESS UNDER (3) 2x POSTS UNLESS NOTED OTHERWISE ON THE PLAN. CONTRACTOR SHALL NOTIFY ENGINEER FOR SUPPORTING STRUCTURAL MEMBER FOR ALL OTHER POST SIZES COMING FROM ABOVE.
21. PROVIDE MIN. (3) 2x POST UNDER BEAMS UNLESS NOTED OTHERWISE.
22. ALL POSTS SHALL CONTINUE DOWN TO FOUNDATION OR STRUCTURAL MEMBER SUCH AS BEAM/GIRDER TRUSS BELOW.
23. PROVIDE MIN. 3 JACK STUDS + 2 KING STUDS AT ALL HEADERS UNLESS NOTED OTHERWISE.
24. ALL WALL STUDS SHALL SPF#2 AND SHALL BE SPACED AT MAX. 16" O.C. UNLESS NOTED OTHERWISE.
25. ALL TWO STORY HIGH WALLS SHALL BE (2) 2x6 SPF#2 BALLOON FRAMED UNLESS NOTED OTHERWISE.
26. PROVIDE FULL HEIGHT BLOCKING BETWEEN JOISTS UP TO THREE JOIST BAYS WHERE JOISTS ARE PARALLEL TO FOUNDATION WALL.

PLAN LEGENDS & SYMBOLS:

- INDICATES BEARING WALL
- INDICATES DRAIN HOLE FROM ABOVE
- INDICATES JOIST/TRUSS HANEGR (REFER TO SHOP DWGS)
- INDICATES FRAMING DIRECTION
- INDICATES REBAR DIRECTION
- (_J+_S) — INDICATES NO. OF KING STUDS AT EACH END; INDICATES NO. OF JACK STUDS AT EACH END
- WF?? — INDICATES WALL FOOTING; WIDTH OF WALL FOOTING IN INCHES
- TS?? — INDICATES THICKENED SLAB; WIDTH OF THICKENED SLAB IN INCHES
- Fx.x — INDICATES ISOLATED COLUMN FOOTING; INDICATES SIZE OF FOOTING IN DECIMAL FEET
- ML?? — MICROLAM LVL 2.0E; DEPTH OF MICROLAM LVL IN INCHES
- LSL?? — LAMINATED STRAND LUMBER 1.7E; DEPTH OF TIMBERSTAND LSL BEAM IN INCHES
- PSL?? — PARALLAM STRAND LUMBER 2.0E; WIDTHxDEPTH OF MEMBER
- CC — COLUMN CAP
- CB — COLUMN BASE
- HD — HOLD DOWN ANCHOR
- MS — METAL STRAP
- H — JOIST/TRUSS/BEAM HANGER
- HC — HURRICANE CLIPS

MICROLAM LVL BEAM SCHEDULE

MARK	DESCRIPTION
(2) ML10	(2) 1 3/4" x 9 1/2" LVL - 1.9E
(2) ML12	(2) 1 3/4" x 11 7/8" LVL - 1.9E
(3) ML10	(3) 1 3/4" x 9 1/2" LVL - 1.9E
(3) ML12	(3) 1 3/4" x 11 7/8" LVL - 1.9E
(3) ML16	(3) 1 3/4" x 16" LVL - 1.9E
(4) ML12	(4) 1 3/4" x 11 7/8" LVL - 1.9E

PARALLAM PSL POST SCHEDULE

MARK	DESCRIPTION
PSL66	5 1/4" x 5 1/4" PSL 1.8E

STEEL COLUMN SCHEDULE

MARK	DESCRIPTION
PIPE3-ADJ-11GA	3"Ø x 11 GA. ADJUSTABLE STEEL PIPE COLUMN
PIPE3.5-ADJ-SCHD40	3 1/2"Ø (O.D.) SCHEDULE 40 ADJUSTABLE STEEL PIPE COLUMN
PIPE4-ADJ-11GA	4"Ø x 11GA. ADJUSTABLE STEEL PIPE COLUMN

© COPYRIGHT 2016
Structural Engineering content of this drawings are property of structBIM LLC and are issued for this project only. Any re-use or re-production of these drawings shall not be done without written consent of structBIM LLC. These drawings are to be read in conjuction with project specifications and drawings from other consultants. These drawings shall not be used as shop drawings. Do not scale drawings, use dimensions as specified.

GTM ARCHITECTS

7735 OLD GEORGETOWN ROAD
SUITE 700
BETHESDA, MD 20814
(240)333-2000
(240)333-2001 FAX
WWW.GTMARCHITECTS.COM

GTM

Seal

STATE OF MARYLAND — KRISHNA KANDEL — 40082 — PROFESSIONAL ENGINEER

Consultant

structBIM ENGINEERS
WE DESIGN....WE BIM
46400 BENEDICT DR, SUITE #211
PHONE: 703-657-4481
E-MAIL: info@structBIM.com

Project

19 HIGH STREET LOT 4
BROOKVILLE, MD

LOT 4

I certify that these documents were prepared or approved by me, and that I am a duly licensed Professional Engineer under the laws of the State of Maryland, license number 40082, Expiration Date: 02-13-2023.

Issue Description	*Date*

structBIM Project No.	22-0165
Checked By	KK
Drawn By	KK
Scale	1/4" = 1'-0"

Sheet Title
SECOND FLOOR FRAMING PLAN

Sheet No.

S2

COPYRIGHT, 2016 structBIMEngineers, LLC.
PLOTTED ON: 4/15/2022 12:51:42 PM

FILE NAME:

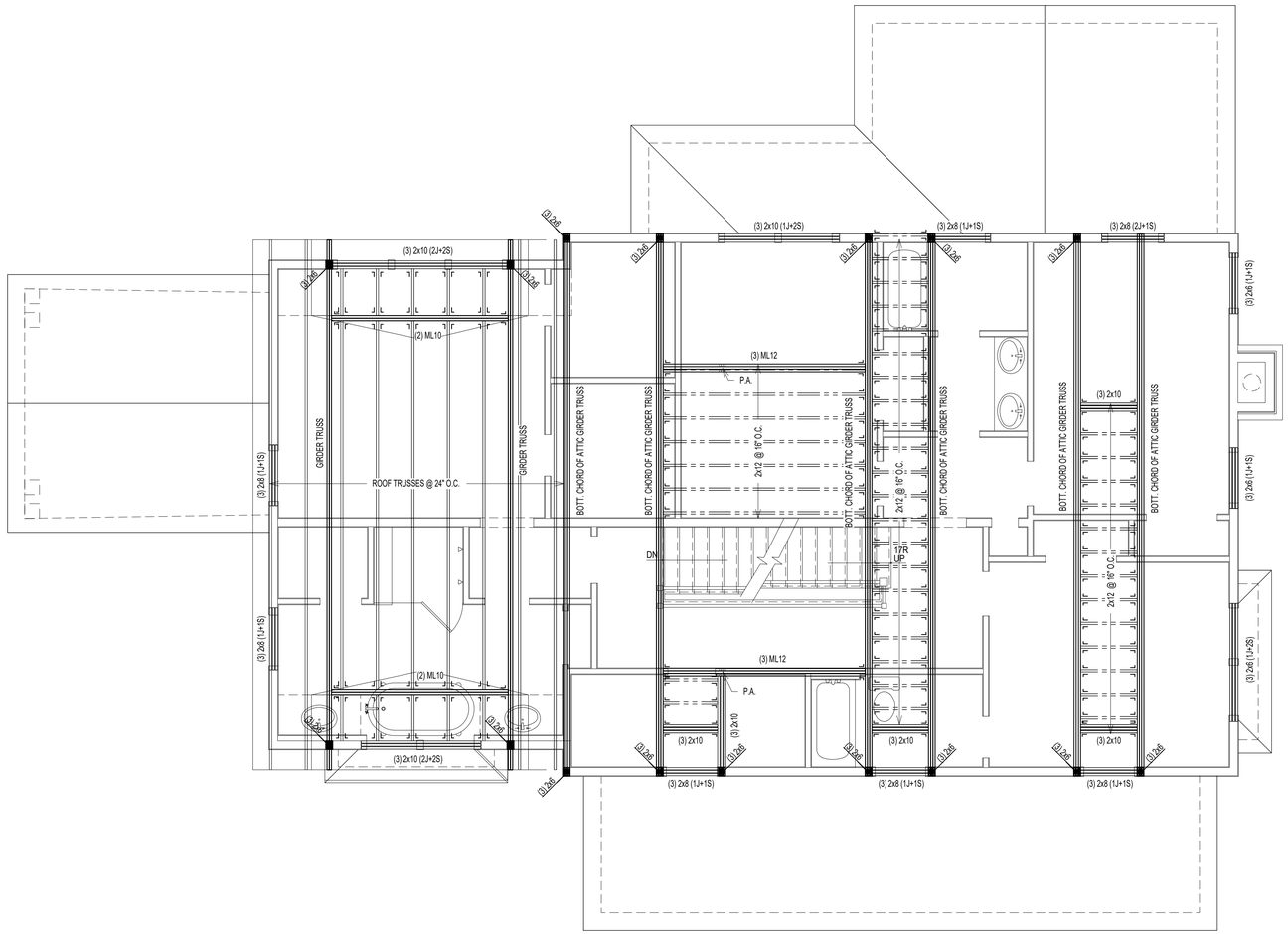

1 / S3 LOFT FLOOR FRAMING PLAN

SCALE: 1/4" = 1'-0"

NOTES:

1. ALL TRUSSES SHALL BE PRE-FABRICATED ENGINEERED ROOF TRUSSES AND SHALL BE INSTALLED PER TRUSS MANUFACTURER'S LAYOUT AND DESIGN. SUBMIT SIGNED AND SEALED SHOP DRAWINGS FOR REVIEW.
2. ALL ROOF SHEATHING SHALL BE APA RATED 7/16" C-C, C-D OR STRUCTURAL II WITH SPAN RATING OF 48/24 PER "AMERICAN PLYWOOD ASSOCIATION". PROVIDE MIN. NAILING PATTERN W/ 8d COMMON NAILS @ 6" O.C. ON EDGES AND 12" O.C. IN FIELD. PROVIDE PLYWOOD CLIPS AT PLYWOOD EDGES BETWEEN EACH FRAMING MEMBER.
3. TRUSS LAYOUT SHOWN ON THESE DRAWINGS ARE FOR SCHEMATIC PURPOSES ONLY AND TO REFLECT DESIGN INTENT FOR OTHER FRAMING MEMBERS. THESE DRAWINGS SHALL NOT BE CONSIDERED AS SHOP DRAWINGS. TRUSS DESIGN DRAWINGS PREPARED BY TRUSS MANUFACTURER SHALL BE USED FOR TRUSS LAYOUT AND COORDINATION. NOTIFY ENGINEER IF VARIATION IS MADE IN TRUSS DESIGN DRAWINGS THAT AFFECTS ORIGINAL DESIGN INTENT.
4. COORDINATE ROOF SLOPES, VALLEYS, HEEL HEIGHTS WITH ARCHITECTURAL DRAWINGS.
5. INSTALL MINIMUM H2.5A HURRICANE CLIPS AT EACH TRUSS BEARING UNLESS SPECIFIED ON SHOP DRAWINGS.
6. AT ALL NON LOAD BEARING WALLS MAINTAIN 1/4" GAP BETWEEN BOTTOM OF TRUSS BOTTOM CHORD AND TOP OF TOP PLATE. INSTALL SIMPSON "STC" TRUSS CLIPS TO MAINTAIN GAP TO ALLOW TRUSS MOVEMENT.
7. ALL SECTIONS/DETAIL CUTS MARKED AS TYP. SHALL BE APPLIED AT ALL SIMILAR CONDITIONS ON ENTIRE PLAN.
8. TRUSS MANUFACTURER TO DESIGN NECESSARY TEMPORARY/PERMENANT BRACING AND SHALL SPECIFY ON SHOP DRAWINGS.
9. TRUSS MANUFACTURER TO SPECIFY NECESSARY CONNECTORS AND FASTENERS FOR ALL CONNECTIONS INCLUDING BUT NOT LIMITED TO UPLIFT CONNECTORS, HANGERS.
10. PROVIDE SOLID BLOCKING OF SAME SIZE WITHIN FLOOR SYSTEM UNDER ALL JACK STUDS, KING STUDS & POSTS FROM ABOVE.
11. PROVIDE MIN. (3) 2x POST UNDER ALL GIRDER TRUSSES UNLESS NOTED OTHERWISE.
12. PROVIDE MIN. TWO JACK STUDS + TWO KING STUDS AT ALL HEADERS UNLESS NOTED OTHERWISE.
13. ALL WALL STUDS SHALL BE SPF#2 OR EQ. APPROVED AND SPACED AT MAX. 16" O.C. UNLESS NOTED OTHERWISE.

PLAN LEGENDS & SYMBOLS:

- INDICATES BEARING WALL
- INDICATES DRAIN HOLE FROM ABOVE
- INDICATES JOIST/TRUSS HANEGR (REFER TO SHOP DWGS)
- INDICATES FRAMING DIRECTION
- INDICATES REBAR DIRECTION
- (_J+_S) — INDICATES NO. OF KING STUDS AT EACH END; INDICATES NO. OF JACK STUDS AT EACH END
- WF?? — INDICATES WALL FOOTING; WIDTH OF WALL FOOTING IN INCHES
- TS?? — INDICATES THICKENED SLAB; WIDTH OF THICKENED SLAB IN INCHES
- Fx.x — INDICATES ISOLATED COLUMN FOOTING; INDICATES SIZE OF FOOTING IN DECIMAL FEET
- ML?? — MICROLAM LVL 2.0E; DEPTH OF MICROLAM LVL IN INCHES
- LSL?? — LAMINATED STRAND LUMBER 1.7E; DEPTH OF TIMBERSTAND LSL BEAM IN INCHES
- PSL?? — PARALLAM STRAND LUMBER 2.0E; WIDTHxDEPTH OF MEMBER
- CC — COLUMN CAP
- CB — COLUMN BASE
- HD — HOLD DOWN ANCHOR
- MS — METAL STRAP
- H — JOIST/TRUSS/BEAM HANGER
- HC — HURRICANE CLIPS

MICROLAM LVL BEAM SCHEDULE

MARK	DESCRIPTION
(2) ML10	(2) 1 3/4" x 9 1/2" LVL - 1.9E
(2) ML12	(2) 1 3/4" x 11 7/8" LVL - 1.9E
(3) ML10	(3) 1 3/4" x 9 1/2" LVL - 1.9E
(3) ML12	(3) 1 3/4" x 11 7/8" LVL - 1.9E
(3) ML16	(3) 1 3/4" x 16" LVL - 1.9E
(4) ML12	(4) 1 3/4" x 11 7/8" LVL - 1.9E

PARALLAM PSL POST SCHEDULE

MARK	DESCRIPTION
PSL66	5 1/4" x 5 1/4" PSL 1.8E

STEEL COLUMN SCHEDULE

MARK	DESCRIPTION
PIPE3-ADJ-11GA	3"Ø x 11 GA. ADJUSTABLE STEEL PIPE COLUMN
PIPE3.5-ADJ-SCHD40	3 1/2"Ø (O.D.) SCHEDULE 40 ADJUSTABLE STEEL PIPE COLUMN
PIPE4-ADJ-11GA	4"Ø x 11GA. ADJUSTABLE STEEL PIPE COLUMN

© COPYRIGHT 2016
Structural Engineering content of this drawings are property of structBIM LLC and are issued for this project only. Any re-use or re-production of these drawings shall not be done without written consent of structBIM LLC. These drawings are to be read in conjuction with project specifications and drawings from other consultants. These drawings shall not be used as shop drawings. Do not scale drawings, use dimensions as specified.

GTM ARCHITECTS

7735 OLD GEORGETOWN ROAD
SUITE 700
BETHESDA, MD 20814
(240)333-2000
(240)333-2001 FAX
WWW.GTMARCHITECTS.COM

GTM

Seal

STATE OF MARYLAND — MICHAEL KAMIS — 40082 — PROFESSIONAL ENGINEER

Consultant

structBIM ENGINEERS
WE DESIGN....WE BIM
46400 BENEDICT DR, SUITE #211
PHONE: 703-657-4481
E-MAIL: info@structBIM.com

Project

19 HIGH STREET LOT 4
BROOKVILLE, MD

LOT 4

I certify that these documents were prepared or approved by me, and that I am a duly licensed Professional Engineer under the laws of the State of Maryland, license number 40082, Expiration Date: 02-13-2023.

Issue Description	*Date*

structBIM Project No.	22-0165
Checked By	KK
Drawn By	KK
Scale	1/4" = 1'-0"

Sheet Title
LOFT FLOOR FRAMING PLAN

Sheet No.

S3

COPYRIGHT, 2016 structBIMEngineers, LLC.
PLOTTED ON: 4/15/2022 12:51:45 PM

FILE NAME:

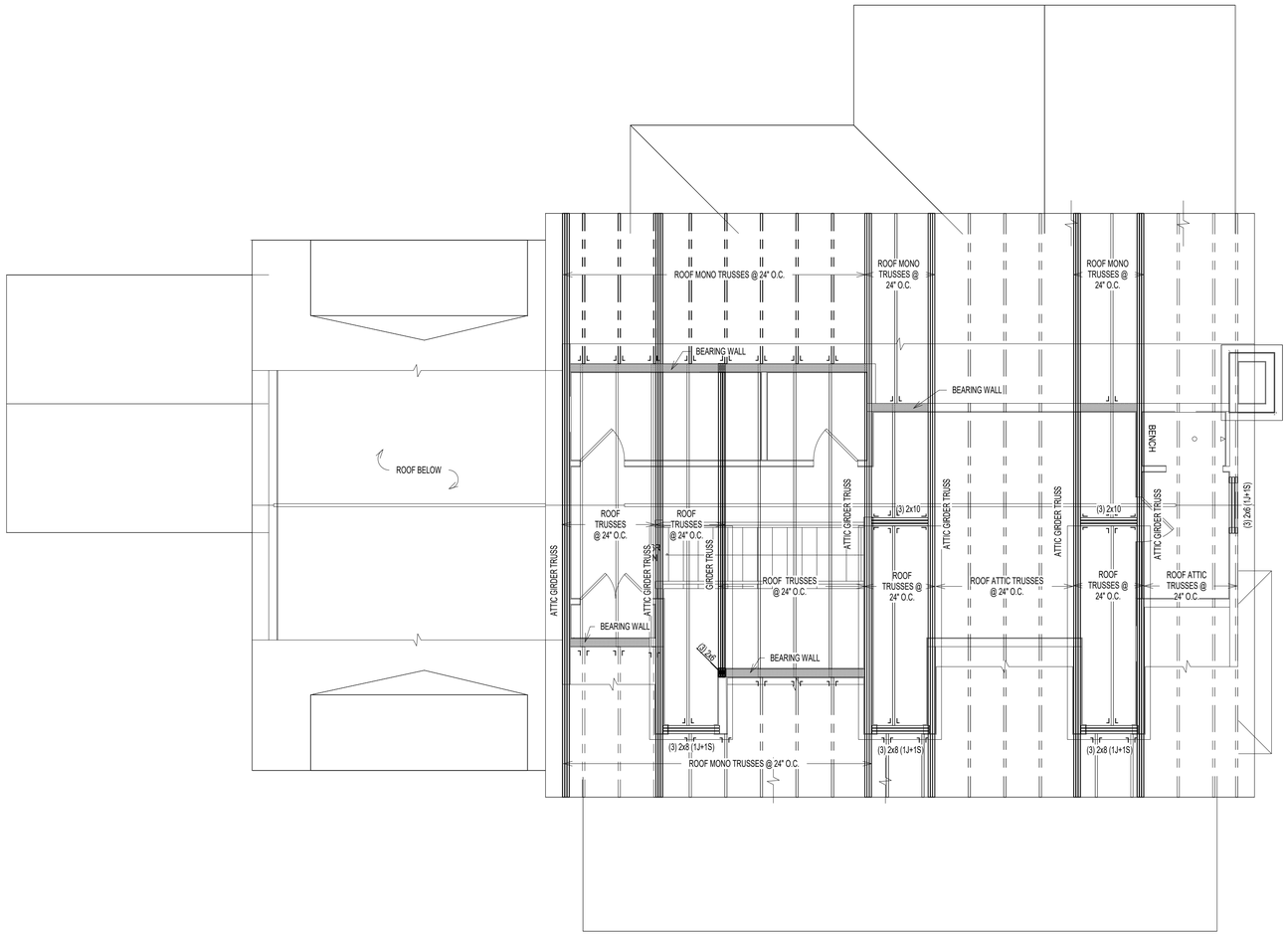

1 / S4 ROOF FRAMING PLAN
SCALE: 1/4" = 1'-0"

NOTES:

1. ALL TRUSSES SHALL BE PRE-FABRICATED ENGINEERED ROOF TRUSSES AND SHALL BE INSTALLED PER TRUSS MANUFACTURER'S LAYOUT AND DESIGN. SUBMIT SIGNED AND SEALED SHOP DRAWINGS FOR REVIEW.
2. ALL ROOF SHEATHING SHALL BE APA RATED 7/16" C-C, C-D OR STRUCTURAL II WITH SPAN RATING OF 48/24 PER "AMERICAN PLYWOOD ASSOCIATION". PROVIDE MIN. NAILING PATTERN W/ 8d COMMON NAILS @ 6" O.C. ON EDGES AND 12" O.C. IN FIELD. PROVIDE PLYWOOD CLIPS AT PLYWOOD EDGES BETWEEN EACH FRAMING MEMBER.
3. TRUSS LAYOUT SHOWN ON THESE DRAWINGS ARE FOR SCHEMATIC PURPOSES ONLY AND TO REFLECT DESIGN INTENT FOR OTHER FRAMING MEMBERS. THESE DRAWINGS SHALL NOT BE CONSIDERED AS SHOP DRAWINGS. TRUSS DESIGN DRAWINGS PREPARED BY TRUSS MANUFACTURER SHALL BE USED FOR TRUSS LAYOUT AND COORDINATION. NOTIFY ENGINEER IF VARIATION IS MADE IN TRUSS DESIGN DRAWINGS THAT AFFECTS ORIGINAL DESIGN INTENT.
4. COORDINATE ROOF SLOPES, VALLEYS, HEEL HEIGHTS WITH ARCHITECTURAL DRAWINGS.
5. INSTALL MINIMUM H2.5A HURRICANE CLIPS AT EACH TRUSS BEARING UNLESS SPECIFIED ON SHOP DRAWINGS.
6. AT ALL NON LOAD BEARING WALLS MAINTAIN 1/4" GAP BETWEEN BOTTOM OF TRUSS BOTTOM CHORD AND TOP OF TOP PLATE. INSTALL SIMPSON "STC" TRUSS CLIPS TO MAINTAIN GAP TO ALLOW TRUSS MOVEMENT.
7. ALL SECTIONS/DETAIL CUTS MARKED AS TYP. SHALL BE APPLIED AT ALL SIMILAR CONDITIONS ON ENTIRE PLAN.
8. TRUSS MANUFACTURER TO DESIGN NECESSARY TEMPORARY/PERMENANT BRACING AND SHALL SPECIFY ON SHOP DRAWINGS.
9. TRUSS MANUFACTURER TO SPECIFY NECESSARY CONNECTORS AND FASTENERS FOR ALL CONNECTIONS INCLUDING BUT NOT LIMITED TO UPLIFT CONNECTORS, HANGERS.
10. PROVIDE SOLID BLOCKING OF SAME SIZE WITHIN FLOOR SYSTEM UNDER ALL JACK STUDS, KING STUDS & POSTS FROM ABOVE.
11. PROVIDE MIN. (3) 2x POST UNDER ALL GIRDER TRUSSES UNLESS NOTED OTHERWISE.
12. PROVIDE MIN. TWO JACK STUDS + TWO KING STUDS AT ALL HEADERS UNLESS NOTED OTHERWISE.
13. ALL WALL STUDS SHALL BE SPF#2 OR EQ. APPROVED AND SPACED AT MAX. 16" O.C. UNLESS NOTED OTHERWISE.

PLAN LEGENDS & SYMBOLS:

- INDICATES BEARING WALL
- INDICATES DRAIN HOLE FROM ABOVE
- INDICATES JOIST/TRUSS HANEGR (REFER TO SHOP DWGS)
- INDICATES FRAMING DIRECTION
- INDICATES REBAR DIRECTION
- (_J+_S) — INDICATES NO. OF KING STUDS AT EACH END; INDICATES NO. OF JACK STUDS AT EACH END
- WF?? — INDICATES WALL FOOTING; WIDTH OF WALL FOOTING IN INCHES
- TS?? — INDICATES THICKENED SLAB; WIDTH OF THICKENED SLAB IN INCHES
- F.x.x — INDICATES ISOLATED COLUMN FOOTING; INDICATES SIZE OF FOOTING IN DECIMAL FEET
- ML?? — MICROLAM LVL 2.0E; DEPTH OF MICROLAM LVL IN INCHES
- LSL?? — LAMINATED STRAND LUMBER 1.7E; DEPTH OF TIMBERSTAND LSL BEAM IN INCHES
- PSL?? — PARALLAM STRAND LUMBER 2.0E; WIDTHxDEPTH OF MEMBER
- CC — COLUMN CAP
- CB — COLUMN BASE
- HD — HOLD DOWN ANCHOR
- MS — METAL STRAP
- H — JOIST/TRUSS/BEAM HANGER
- HC — HURRICANE CLIPS

MICROLAM LVL BEAM SCHEDULE

MARK	DESCRIPTION
(2) ML10	(2) 1 3/4" x 9 1/2" LVL - 1.9E
(2) ML12	(2) 1 3/4" x 11 7/8" LVL - 1.9E
(3) ML10	(3) 1 3/4" x 9 1/2" LVL - 1.9E
(3) ML12	(3) 1 3/4" x 11 7/8" LVL - 1.9E
(3) ML16	(3) 1 3/4" x 16" LVL - 1.9E
(4) ML12	(4) 1 3/4" x 11 7/8" LVL - 1.9E

PARALLAM PSL POST SCHEDULE

MARK	DESCRIPTION
PSL66	5 1/4" x 5 1/4" PSL 1.8E

STEEL COLUMN SCHEDULE

MARK	DESCRIPTION
PIPE3-ADJ-11GA	3"Ø x 11 GA. ADJUSTABLE STEEL PIPE COLUMN
PIPE3.5-ADJ-SCHD40	3 1/2"Ø (O.D.) SCHEDULE 40 ADJUSTABLE STEEL PIPE COLUMN
PIPE4-ADJ-11GA	4"Ø x 11GA. ADJUSTABLE STEEL PIPE COLUMN

© COPYRIGHT 2016
Structural Engineering content of this drawings are property of structBIM LLC and are issued for this project only. Any re-use or re-production of these drawings shall not be done without written consent of structBIM LLC. These drawings are to be read in conjuction with project specifications and drawings from other consultants. These drawings shall not be used as shop drawings. Do not scale drawings, use dimensions as specified.

GTM ARCHITECTS

7735 OLD GEORGETOWN ROAD
SUITE 700
BETHESDA, MD 20814
(240)333-2000
(240)333-2001 FAX
WWW.GTMARCHITECTS.COM

GTM

Seal

STATE OF MARYLAND — KAMAL KHANNA — 40082 — PROFESSIONAL ENGINEER

Consultant

structBIM ENGINEERS
WE DESIGN....WE BIM
46400 BENEDICT DR, SUITE #211
PHONE: 703-657-4481
E-MAIL: info@structBIM.com

Project

19 HIGH STREET LOT 4
BROOKVILLE, MD

LOT 4

I certify that these documents were prepared or approved by me, and that I am a duly licensed Professional Engineer under the laws of the State of Maryland, license number 40082, Expiration Date: 02-13-2023.

Issue Description	*Date*

structBIM Project No.	22-0165
Checked By	KK
Drawn By	KK
Scale	1/4" = 1'-0"

Sheet Title

ROOF FRAMING PLAN

Sheet No.

S4

COPYRIGHT, 2016 structBIMEngineers, LLC.
PLOTTED ON: 4/15/2022 12:51:47 PM

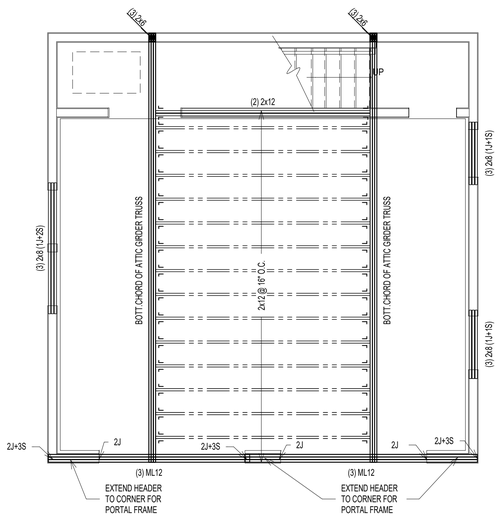

3 / S5 LOFT FLOOR FRAMING PLAN
SCALE: 1/4" = 1'-0"

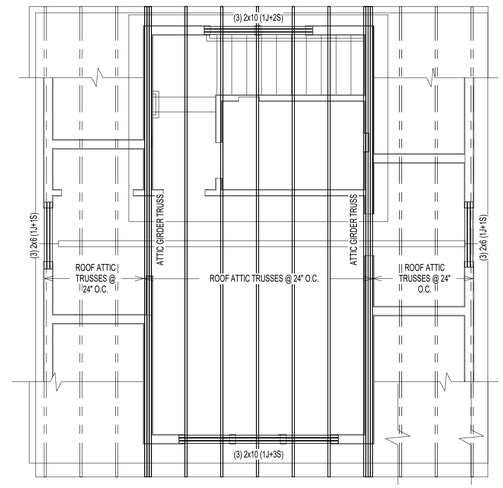

1 / S5 ATTIC ROOF FRAMING PLAN
SCALE: 1/4" = 1'-0"

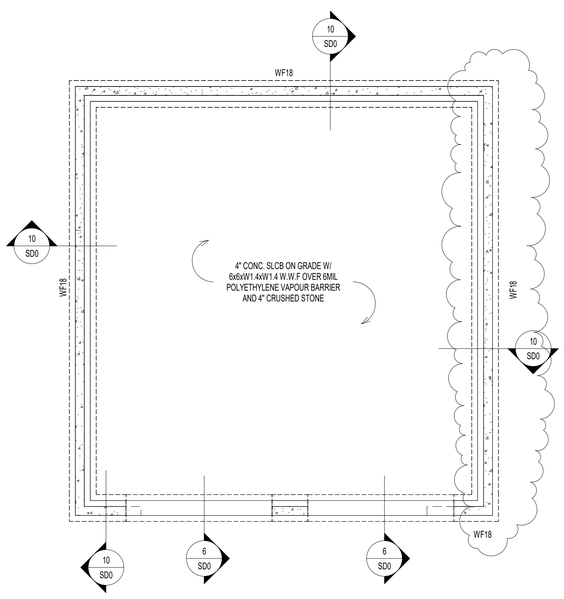

4 / S5 FOUNDATION PLAN
SCALE: 1/4" = 1'-0"

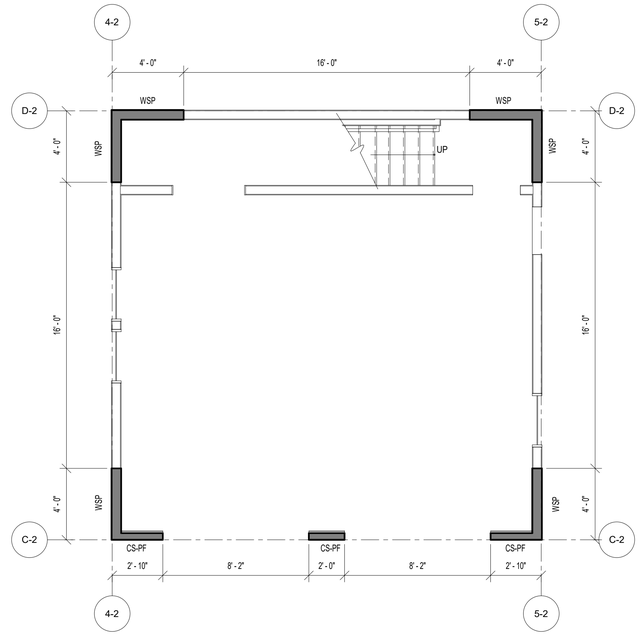

2 / S5 SECOND FLOOR WALL BRACING PLAN
SCALE: 1/4" = 1'-0"

NOTES:

1. ALL TRUSSES SHALL BE PRE-FABRICATED ENGINEERED ROOF TRUSSES AND SHALL BE INSTALLED PER TRUSS MANUFACTURER'S LAYOUT AND DESIGN. SUBMIT SIGNED AND SEALED SHOP DRAWINGS FOR REVIEW.
2. ALL ROOF SHEATHING SHALL BE APA RATED 7/16" C-C, C-D OR STRUCTURAL II WITH SPAN RATING OF 48/24 PER "AMERICAN PLYWOOD ASSOCIATION". PROVIDE MIN. NAILING PATTERN W/ 8d COMMON NAILS @ 6" O.C. ON EDGES AND 12" O.C. IN FIELD. PROVIDE PLYWOOD CLIPS AT PLYWOOD EDGES BETWEEN EACH FRAMING MEMBER.
3. TRUSS LAYOUT SHOWN ON THESE DRAWINGS ARE FOR SCHEMATIC PURPOSES ONLY AND TO REFLECT DESIGN INTENT FOR OTHER FRAMING MEMBERS. THESE DRAWINGS SHALL NOT BE CONSIDERED AS SHOP DRAWINGS. TRUSS DESIGN DRAWINGS PREPARED BY TRUSS MANUFACTURER SHALL BE USED FOR TRUSS LAYOUT AND COORDINATION. NOTIFY ENGINEER IF VARIATION IS MADE IN TRUSS DESIGN DRAWINGS THAT AFFECTS ORIGINAL DESIGN INTENT.
4. COORDINATE ROOF SLOPES, VALLEYS, HEEL HEIGHTS WITH ARCHITECTURAL DRAWINGS.
5. INSTALL MINIMUM H2.5A HURRICANE CLIPS AT EACH TRUSS BEARING UNLESS SPECIFIED ON SHOP DRAWINGS.
6. AT ALL NON LOAD BEARING WALLS MAINTAIN 1/4" GAP BETWEEN BOTTOM OF TRUSS BOTTOM CHORD AND TOP OF TOP PLATE. INSTALL SIMPSON "STC" TRUSS CLIPS TO MAINTAIN GAP TO ALLOW TRUSS MOVEMENT.
7. ALL SECTIONS/DETAIL CUTS MARKED AS TYP. SHALL BE APPLIED AT ALL SIMILAR CONDITIONS ON ENTIRE PLAN.
8. TRUSS MANUFACTURER TO DESIGN NECESSARY TEMPORARY/PERMENANT BRACING AND SHALL SPECIFY ON SHOP DRAWINGS.
9. TRUSS MANUFACTURER TO SPECIFY NECESSARY CONNECTORS AND FASTENERS FOR ALL CONNECTIONS INCLUDING BUT NOT LIMITED TO UPLIFT CONNECTORS, HANGERS.
10. PROVIDE SOLID BLOCKING OF SAME SIZE WITHIN FLOOR SYSTEM UNDER ALL JACK STUDS, KING STUDS & POSTS FROM ABOVE.
11. PROVIDE MIN. (3) 2x POST UNDER ALL GIRDER TRUSSES UNLESS NOTED OTHERWISE.
12. PROVIDE MIN. TWO JACK STUDS + TWO KING STUDS AT ALL HEADERS UNLESS NOTED OTHERWISE.
13. ALL WALL STUDS SHALL BE SPF#2 OR EQ. APPROVED AND SPACED AT MAX. 16" O.C. UNLESS NOTED OTHERWISE.

PLAN LEGENDS & SYMBOLS:

- INDICATES BEARING WALL
- INDICATES DRAIN HOLE FROM ABOVE
- INDICATES JOIST/TRUSS HANEGR (REFER TO SHOP DWGS)
- INDICATES FRAMING DIRECTION
- INDICATES REBAR DIRECTION
- (_J+_S) — INDICATES NO. OF KING STUDS AT EACH END; INDICATES NO. OF JACK STUDS AT EACH END
- WF?? — INDICATES WALL FOOTING; WIDTH OF WALL FOOTING IN INCHES
- TS?? — INDICATES THICKENED SLAB; WIDTH OF THICKENED SLAB IN INCHES
- Fx.x — INDICATES ISOLATED COLUMN FOOTING; INDICATES SIZE OF FOOTING IN DECIMAL FEET
- ML?? — MICROLAM LVL 2.0E; DEPTH OF MICROLAM LVL IN INCHES
- LSL?? — LAMINATED STRAND LUMBER 1.7E; DEPTH OF TIMBERSTAND LSL BEAM IN INCHES
- PSL?? — PARALLAM STRAND LUMBER 2.0E; WIDTHxDEPTH OF MEMBER
- CC — COLUMN CAP
- CB — COLUMN BASE
- HD — HOLD DOWN ANCHOR
- MS — METAL STRAP
- H — JOIST/TRUSS/BEAM HANGER
- HC — HURRICANE CLIPS

Ultimate Wind Speed (mph)		115							
BWL Designation		C-2		D-2		4-2		5-2	
No. of Floors above BWL		0		0		0		0	
BWP Method		CS-PF		WSP		WSP		WSP	
Average BWL Spacing (ft)		24		24		24		24	
Tabular Requirement (ft)		3.90		4.30		4.30		4.30	
Adjustments	Exposure	B	1.00	B	1.00	B	1.00	B	1.00
	Eave-to-Ridge Ht. (ft)	15.00	1.30	15.00	1.30	15.00	1.30	15.00	1.30
	Max. Wall Ht. (ft)	9.00	0.95	9.00	0.95	9.00	0.95	9.00	0.95
	No. of BWLs	2	1.00	2	1.00	3	1.30	3	1.30
	Omit Interior Finish?	No	1.00	No	1.00	No	1.00	No	1.00
	Added Hold-downs?	No	1.00	No	1.00	No	1.00	No	1.00
	Joints Blocked?	Yes	1.00	Yes	1.00	Yes	1.00	Yes	1.00
	Fasteners @ 4" o.c.?	No	1.00	No	1.00	No	1.00	No	1.00
Required BWP Length (ft)		4.82		5.31		6.90		6.90	
Actual BWPs	BWP	Method	Length	Method	Length	Method	Length	Method	Length
	Contributing Length (ft) WSP=Prectual SFB=Sectual GB(oppl)=0.5ractual GB(bl)=Rectual CS-PF=1.5ractual PF(bl)=1.5ractual PF=ract ABW=ht'	1 CS-PF	2.81	WSP	4.00	WSP	4.00	WSP	4.00
		2 CS-PF	2.00	WSP	4.00	WSP	4.00	WSP	4.00
		3 CS-PF	2.81						
		4							
		5							
		6							
		7							
Actual BWP Length (ft)		7.62		8.00		8.00		8.00	
Actual ≥ Required?		PASS		PASS		PASS		PASS	
BWPs ≤ 20' Apart?		Yes		Yes		Yes		Yes	
≥ 2 Panels in BWL?		Yes		Yes		Yes		Yes	
BWP 10' from Ends?		Yes		Yes		Yes		Yes	
Continuous Sheathing End Conditions		End 1	End 2	End 1	End 2	End 1	End 2	End 1	End 2
		1	1	1	1	1	1	1	1
BWL Compliance		PASS		PASS		PASS		PASS	

WALL BRACING/SHEAR WALL SCHEDULE

MARK	DESCRIPTION	FASTENING PATTERN
CS-PF	7/16" APA RATED OSB SHEATHING	8d COMMON NAILS (2 1/2" x 0.131") @ 6" O.C. ON EDGES & 12" O.C. IN-FIELD
CS-WSP	7/16" APA RATED OSB SHEATHING	8d COMMON NAILS (2 1/2" x 0.131") @ 6" O.C. ON EDGES & 12" O.C. IN-FIELD
GB (BOTH SIDES)	1/2" GYPSUM WALL BOARD SHEATHING	1 1/2 " GALVANIZED ROOFING NAILS OR 1 1/2" GALVANIZED STAPLES OR 1 1/4" SCREWS TYPE W OR S @ 7" O.C. ON EDGES & IN-FIELD
GB (ONE SIDE)	1/2" GYPSUM WALL BOARD SHEATHING	1 1/2 " GALVANIZED ROOFING NAILS OR 1 1/2" GALVANIZED STAPLES OR 1 1/4" SCREWS TYPE W OR S @ 7" O.C. ON EDGES & IN-FIELD
WSP	7/16" APA RATED OSB SHEATHING	8d COMMON NAILS (2 1/2" x 0.131") @ 6" O.C. ON EDGES & 12" O.C. IN-FIELD

© COPYRIGHT 2016
Structural Engineering content of this drawings are property of structBIM LLC and are issued for this project only. Any re-use or re-production of these drawings shall not be done without written consent of structBIM LLC. These drawings are to be read in conjuction with project specifications and drawings from other consultants. These drawings shall not be used as shop drawings. Do not scale drawings, use dimensions as specified.

GTM ARCHITECTS
7735 OLD GEORGETOWN ROAD
SUITE 700
BETHESDA, MD 20814
(240)333-2000
(240)333-2001 FAX
WWW.GTMARCHITECTS.COM
GTM

Seal

STATE OF MARYLAND — KRISHNA KANDEL — 40082 — PROFESSIONAL ENGINEER

Consultant

structBIM ENGINEERS
WE DESIGN....WE BIM
46400 BENEDICT DR, SUITE #211
PHONE: 703-657-4481
E-MAIL: info@structBIM.com

Project

19 HIGH STREET LOT 4
BROOKVILLE, MD

LOT 4

I certify that these documents were prepared or approved by me, and that I am a duly licensed Professional Engineer under the laws of the State of Maryland, license number 40082, Expiration Date: 02-13-2023.

Issue Description	*Date*

structBIM Project No.	22-0165
Checked By	KK
Drawn By	KK
Scale	1/4" = 1'-0"

Sheet Title

GARAGE FRAMING PLAN

Sheet No.

S5

COPYRIGHT, 2016 structBIMEngineers, LLC.
PLOTTED ON: 4/18/2022 12:51:48 PM

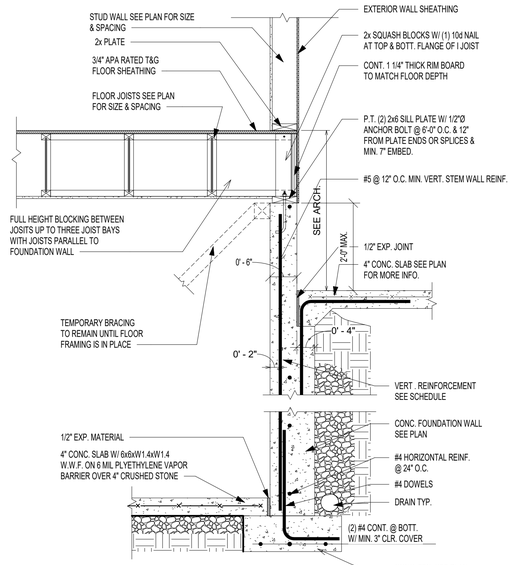

12 SD0 — TYP. FOUNDATION WALL SECTION @ GARAGE
SCALE: 3/4" = 1'-0"

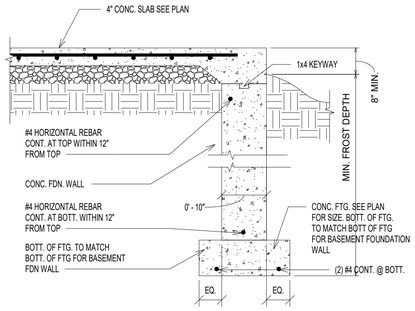

9 SD0 — SD0_12_FNDN_CONC_PORCH1
SCALE: 3/4" = 1'-0"

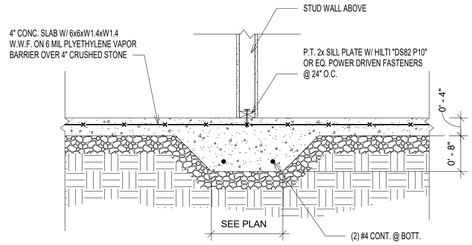

5 SD0 — INT. WALL THICKENED SLAB
SCALE: 3/4" = 1'-0"

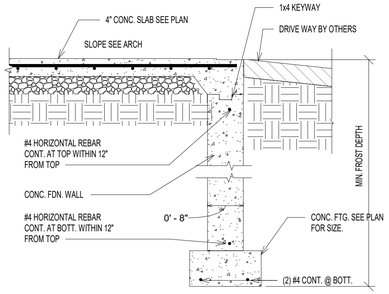

6 SD0 — FOUNDATION WALL @ GARAGE ENTRY
SCALE: 3/4" = 1'-0"

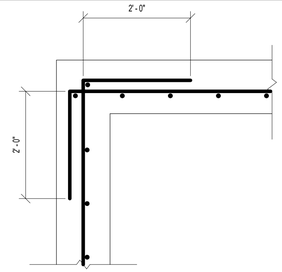

TYP. CORNER REINFORCEMENT DETAIL (PLAN VIEW)

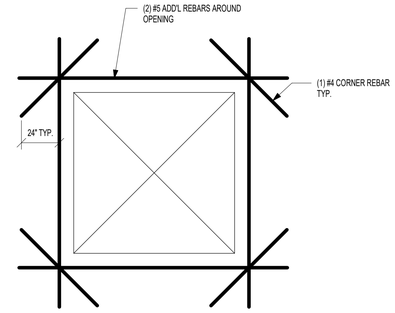

TYP. REINFORCEMENT AROUND OEPNING(ELEVATION VIEW)

1 SD0 — TYP. REINFORCEMENT AT WALL CORNER & OPENING
SCALE: 3/4" = 1'-0"

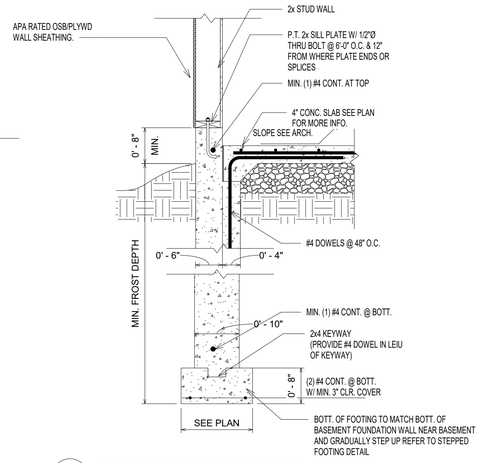

10 SD0 — TYP. FOUNDATION WALL @ GARAGE W/ SIDING
SCALE: 3/4" = 1'-0"

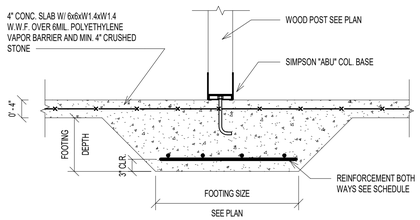

7 SD0 — TYPICAL WOOD COLUMN FOOTING
SCALE: 3/4" = 1'-0"

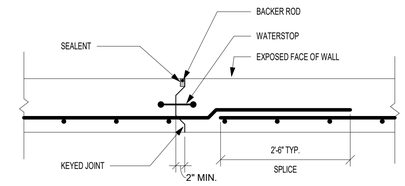

NOTE: PROVIDE CONSTRUCTION OR CONTROL JOINTS IN FOUNDATION WALLS AT EVERY 40'-0" TYPICAL.

2 SD0 — TYP CONTROL JOINT @ FOUNDATION WALL
SCALE: 3/4" = 1'-0"

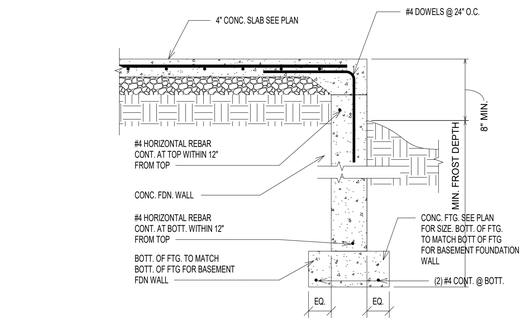

13 SD0 — SECTION
SCALE: 3/4" = 1'-0"

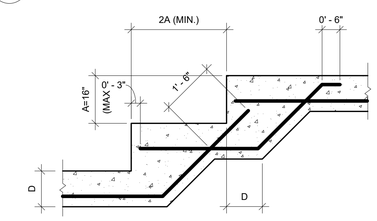

NOTE: SEE PLAN FOR REINFORCING AND OTHER INFO.

3 SD0 — TYP. STEPPED FOOTING DETAIL
SCALE: 1/2" = 1'-0"

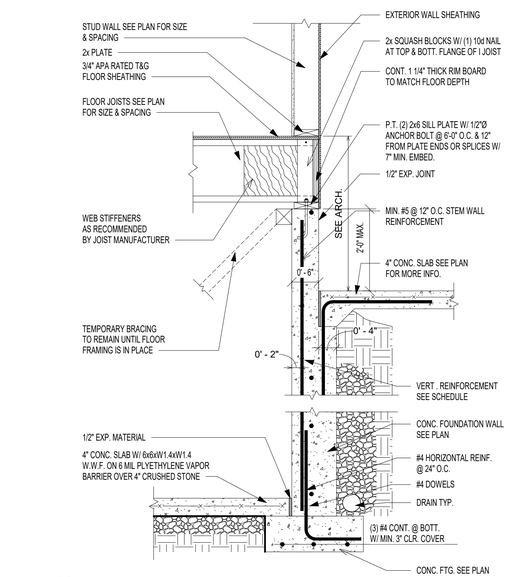

11 SD0 — TYP. FOUNDATION WALL SECTION @ GARAGE
SCALE: 3/4" = 1'-0"

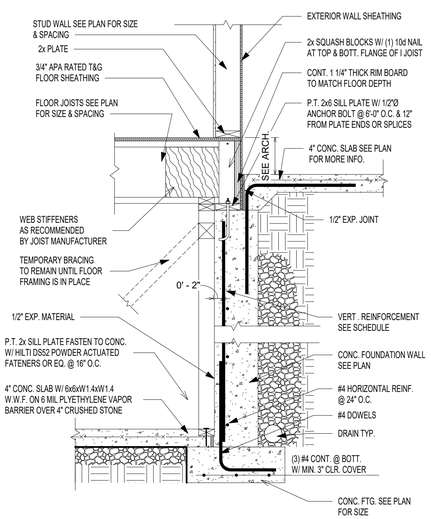

8 SD0 — TYP. FOUNDATION WALL SECTION @ PORCH
SCALE: 3/4" = 1'-0"

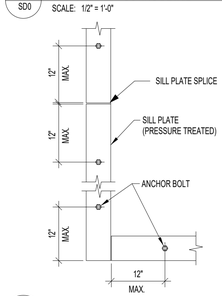

NOTES:

1. MINIMUM SILL BOLTING TO CONCRETE SHALL BE 1/2"Ø ANCHOR BOLTS, OR EQUAL, AT 6'-0" O.C. WITH 7" MINIMUM EMBEDMENT.

2. ALL ANCHORS FOR SILL PLATES SUPPORTING SHEAR WALLS (SW) SHALL HAVE MIN. 3"x3" STEEL WASHERS AND SHALL EXTEND A MINIMUM OF 2" ABOVE TOP OF SILL.

3. PROVIDE MINIMUM (2) BOLTS PER PIECE.

4. SEE OTHER DETAILS FOR USE OF MUDSILL ANCHORS IN LIEU OF ANCHOR BOLTS.

4 SD0 — TYP. SILL PLATE ANCHORAGE
SCALE: 3/4" = 1'-0"

© COPYRIGHT 2016
Structural Engineering content of this drawings are property of structBIM LLC and are issued for this project only. Any re-use or re-production of these drawings shall not be done without written consent of structBIM LLC. These drawings are to be read in conjuction with project specifications and drawings from other consultants. These drawings shall not be used as shop drawings. Do not scale drawings, use dimensions as specified.

GTM ARCHITECTS

7735 OLD GEORGETOWN ROAD
SUITE 700
BETHESDA, MD 20814
(240)333-2000
(240)333-2001 FAX
WWW.GTMARCHITECTS.COM

GTM

Seal

Consultant

structBIM ENGINEERS
WE DESIGN....WE BIM
46400 BENEDICT DR, SUITE #211
PHONE: 703-657-4481
E-MAIL: info@structBIM.com

Project

19 HIGH STREET LOT 4
BROOKVILLE, MD

LOT 4

I certify that these documents were prepared or approved by me, and that I am a duly licensed Professional Engineer under the laws of the State of Maryland, license number 40082, Expiration Date: 02-13-2023.

Issue Description	*Date*

structBIM Project No.	22-0165
Checked By	KK
Drawn By	KK
Scale	As indicated

Sheet Title

FOUNDATION DETAILS

Sheet No.

SD0

COPYRIGHT, 2016 structBIMEngineers, LLC.
PLOTTED ON: 4/15/2022 12:51:55 PM

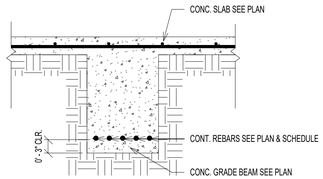

7 SD0.1 TYP. GRADE BEAM DETAIL
SCALE: 3/4" = 1'-0"

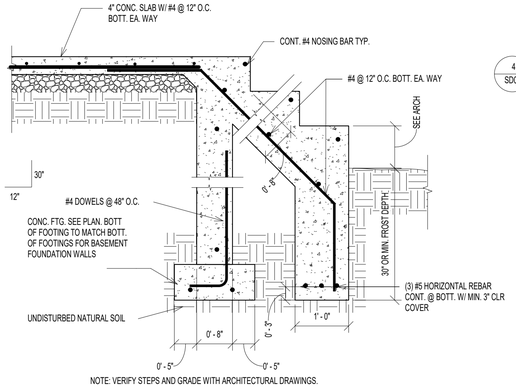

NOTE: VERIFY STEPS AND GRADE WITH ARCHITECTURAL DRAWINGS.

8 SD0.1 STEPS @ PORCH
SCALE: 3/4" = 1'-0"

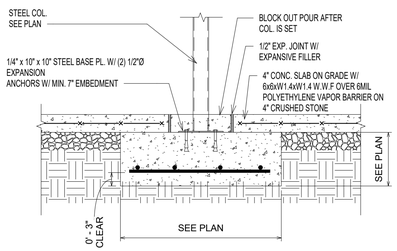

9 SD0.1 ISOLATED COLUMN FOOTING
SCALE: 3/4" = 1'-0"

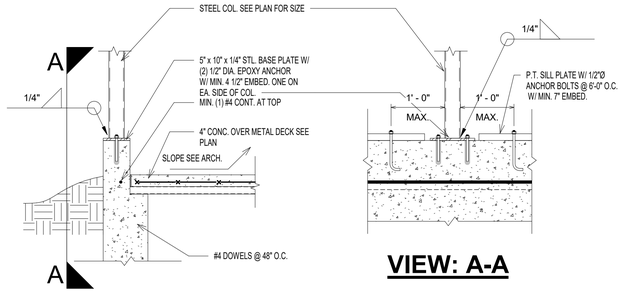

4 SD0.1 STEEL COL. ON GARAGE FDN WALL
SCALE: 3/4" = 1'-0"

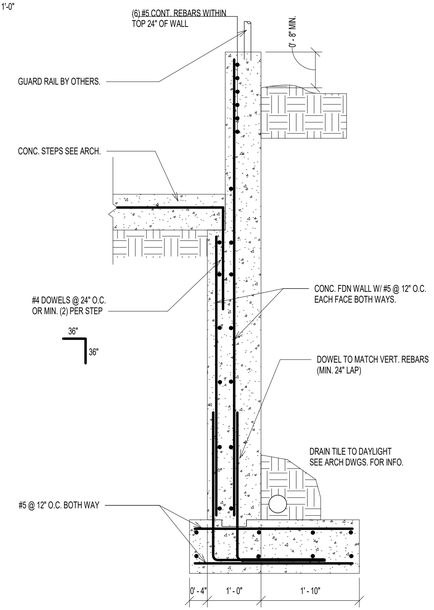

5 SD0.1 TYP. AREA WAY DETAIL
SCALE: 3/4" = 1'-0"

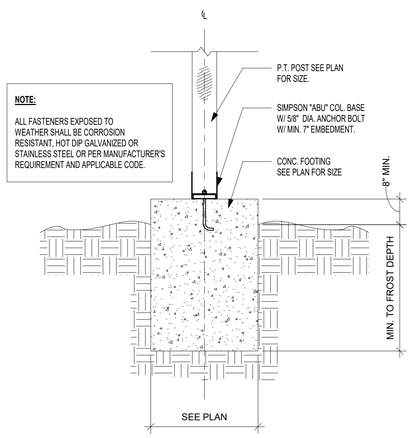

NOTE:

ALL FASTENERS EXPOSED TO WEATHER SHALL BE CORROSION RESISTANT, HOT DIP GALVANIZED OR STAINLESS STEEL OR PER MANUFACTURER'S REQUIREMENT AND APPLICABLE CODE.

6 SD0.1 DECK POST TO FTG
SCALE: 3/4" = 1'-0"

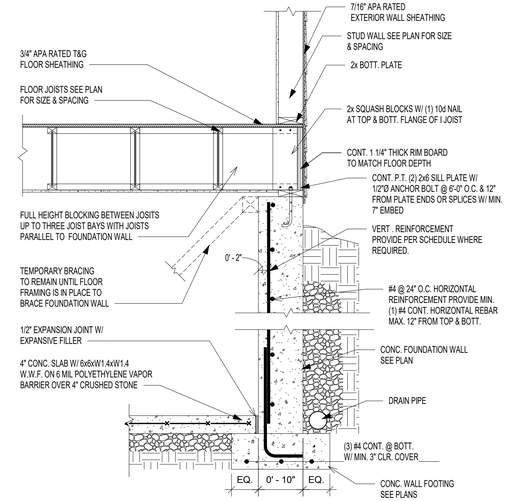

1 SD0.1 TYP. FOUNDATION WALL SECTION
SCALE: 3/4" = 1'-0"

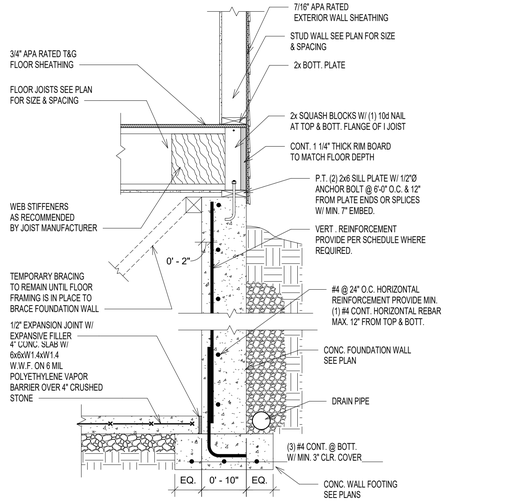

2 SD0.1 TYP. FOUNDATION WALL SECTION
SCALE: 3/4" = 1'-0"

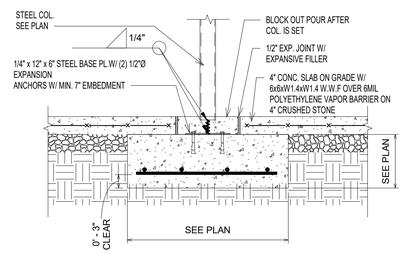

3 SD0.1 ISOLATED COLUMN FOOTING
SCALE: 3/4" = 1'-0"

© COPYRIGHT 2016
Structural Engineering content of this drawings are property of structBIM LLC and are issued for this project only. Any re-use or re-production of these drawings shall not be done without written consent of structBIM LLC. These drawings are to be read in conjuction with project specifications and drawings from other consultants. These drawings shall not be used as shop drawings. Do not scale drawings, use dimensions as specified.

GTM ARCHITECTS

7735 OLD GEORGETOWN ROAD
SUITE 700
BETHESDA, MD 20814
(240)333-2000
(240)333-2001 FAX
WWW.GTMARCHITECTS.COM

GTM

Seal

STATE OF MARYLAND
MICHAEL KANE
40082
PROFESSIONAL ENGINEER

Consultant

structBIM ENGINEERS
WE DESIGN....WE BIM
46400 BENEDICT DR, SUITE #211
PHONE: 703-657-4481
E-MAIL: info@structBIM.com

Project

19 HIGH STREET LOT 4
BROOKVILLE, MD

LOT 4

I certify that these documents were prepared or approved by me, and that I am a duly licensed Professional Engineer under the laws of the State of Maryland, license number 40082, Expiration Date: 02-13-2023.

Issue Description	*Date*

structBIM Project No.	22-0165
Checked By	KK
Drawn By	KK
Scale	3/4" = 1'-0"

Sheet Title

FOUNDATION DETAILS

Sheet No.

SD0.1

COPYRIGHT, 2016 structBIMEngineers, LLC.

PLOTTED ON: 4/18/2022 12:52:46 PM

FILE NAME:

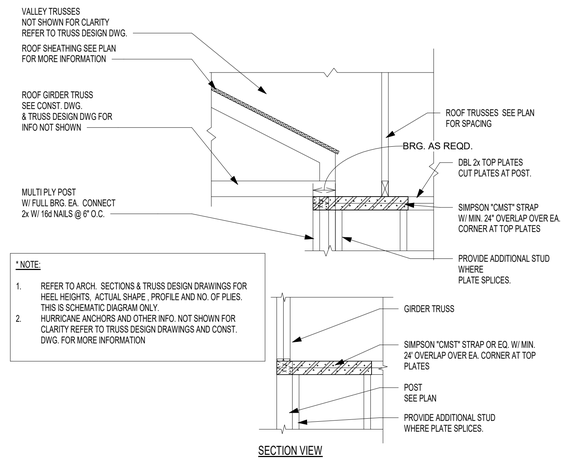

* NOTE:

1. REFER TO ARCH. SECTIONS & TRUSS DESIGN DRAWINGS FOR HEEL HEIGHTS, ACTUAL SHAPE , PROFILE AND NO. OF PLIES. THIS IS SCHEMATIC DIAGRAM ONLY.
2. HURRICANE ANCHORS AND OTHER INFO. NOT SHOWN FOR CLARITY REFER TO TRUSS DESIGN DRAWINGS AND CONST. DWG. FOR MORE INFORMATION

SECTION VIEW

10 / SD1 G.T. W/ FULL BRG ON POST @ CORNER
SCALE: 3/4" = 1'-0"

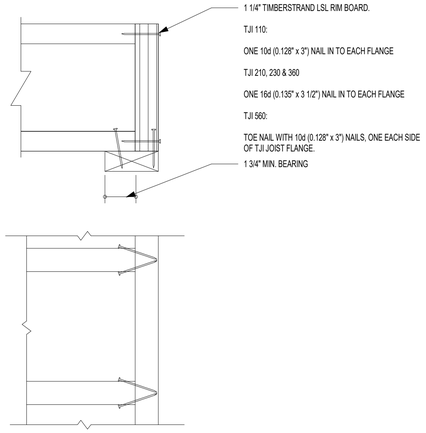

TOP VIEW

7 / SD1 RIM TO TJI JOIST CONNECTION
SCALE: 3/4" = 1'-0"

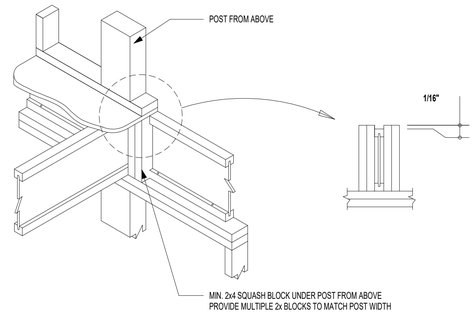

4 / SD1 JOISTS BRG @ EXT. WALL W/ POST ABOVE
SCALE: 3/4" = 1'-0"

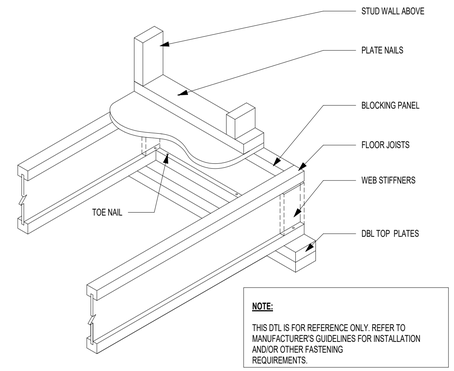

NOTE:

THIS DTL IS FOR REFERENCE ONLY. REFER TO MANUFACTURER'S GUIDELINES FOR INSTALLATION AND/OR OTHER FASTENING REQUIREMENTS.

1 / SD1 I JOIST WITH BRG WALL ABOVE
SCALE: 3/4" = 1'-0"

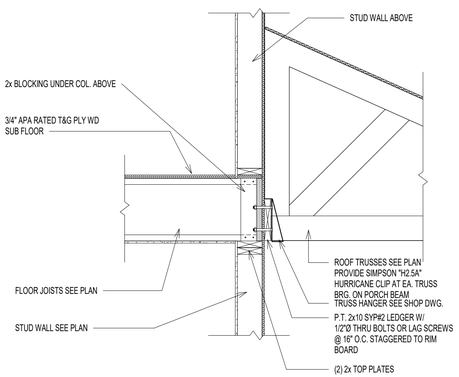

11 / SD1 SECTION @ PORCH
SCALE: 3/4" = 1'-0"

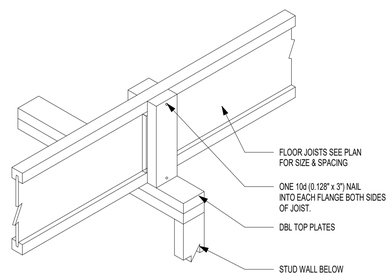

8 / SD1 TYP. SQUASH BLOCKS DETAIL
SCALE: 3/4" = 1'-0"

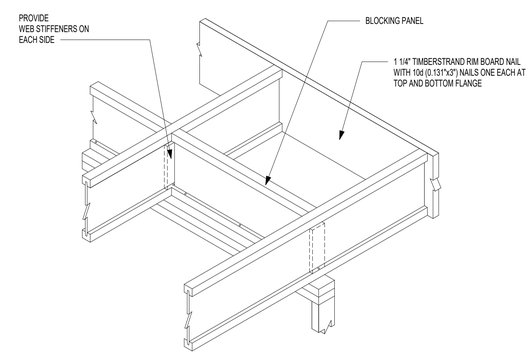

DO NOT CUT FLANGES OR WEB

5 / SD1 CANTILEVER JOIST DETAIL
SCALE: 3/4" = 1'-0"

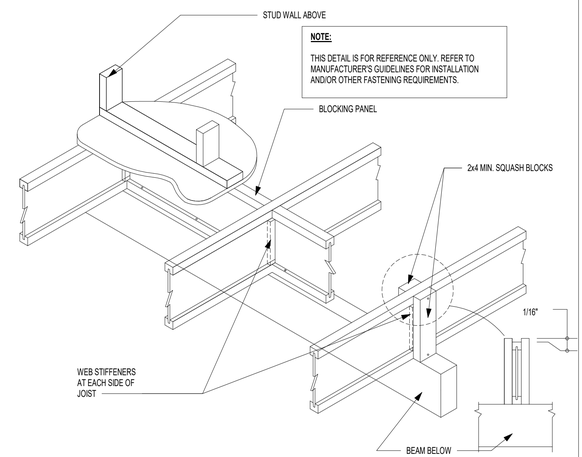

NOTE:

THIS DETAIL IS FOR REFERENCE ONLY. REFER TO MANUFACTURER'S GUIDELINES FOR INSTALLATION AND/OR OTHER FASTENING REQUIREMENTS.

2 / SD1 JOIST W/ INT. BRG. ON BEAM & BRG. WALL FROM ABOVE
SCALE: 3/4" = 1'-0"

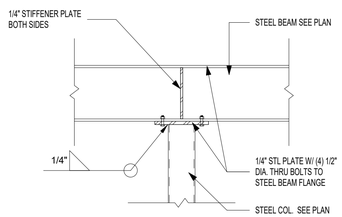

12 / SD1 STEEL BEAM TO STEEL COLUMN - INT. SUPPORT
SCALE: 3/4" = 1'-0"

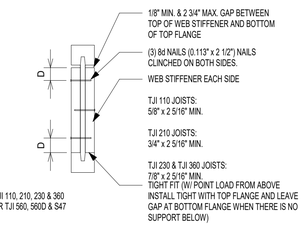

TJI JOIST SERIES	DEPTH	MINIMUM WEB STIFFENER SIZE	NAILING		
			TYPE	END	INTERMEDIATE
110	ALL	5/8" x 2 5/16"	8d (0.113" x 2 1/2")	3	3
210	ALL	3/4" x 2 5/16"			
230 & 360	ALL	7/8" x 2 5/16"			

9 / SD1 TYP. I JOIST WEB STIFFENER SCHEDULE
SCALE: 3/4" = 1'-0"

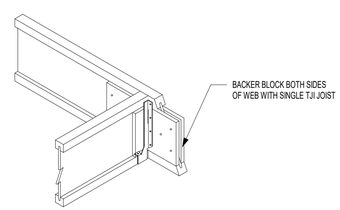

TJI	110		210		230 OR 360		560	
DEPTH	9 1/2" OR 11 7/8"	14"	9 1/2" OR 11 7/8"	14" OR 16"	9 1/2" OR 11 7/8"	14" OR 16"	11 7/8"	14" OR 16"
FILLER BLOCK (1)	2x6	2x8	2x6 + 3/8" SHEATHING	2x8 + 3/8" SHEATHING	2x6 + 1/2" SHEATHING	2x8 + 1/2" SHEATHING	(2) 2x6	(2) 2x8
BACKER BLOCK (1)	5/8" OR 3/4"		3/4" OR 7/8"		7/8" OR 1" NET		2x6	2x8

6 / SD1 SINGLE JOIST TO SINGLE JOIST CONNECTION
SCALE: 3/4" = 1'-0"

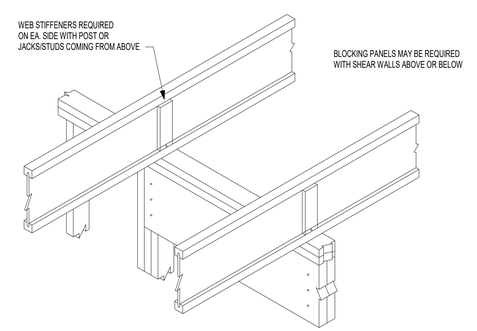

3 / SD1 INTERMEDIATE BEARING
SCALE: 3/4" = 1'-0"

© COPYRIGHT 2016
Structural Engineering content of this drawings are property of structBIM LLC and are issued for this project only. Any re-use or re-production of these drawings shall not be done without written consent of structBIM LLC. These drawings are to be read in conjuction with project specifications and drawings from other consultants. These drawings shall not be used as shop drawings. Do not scale drawings, use dimensions as specified.

GTM ARCHITECTS

7735 OLD GEORGETOWN ROAD
SUITE 700
BETHESDA, MD 20814
(240)333-2000
(240)333-2001 FAX
WWW.GTMARCHITECTS.COM

Seal

Consultant

structBIM ENGINEERS
WE DESIGN....WE BIM
46400 BENEDICT DR, SUITE #211
PHONE: 703-657-4481
E-MAIL: info@structBIM.com

Project

19 HIGH STREET LOT 4
BROOKVILLE, MD

LOT 4

I certify that these documents were prepared or approved by me, and that I am a duly licensed Professional Engineer under the laws of the State of Maryland, license number 40082, Expiration Date: 02-13-2023.

Issue Description	Date

structBIM Project No.	22-0165
Checked By	KK
Drawn By	KK
Scale	3/4" = 1'-0"

Sheet Title

FRAMING DETAILS

Sheet No.

SD1

COPYRIGHT, 2016 structBIMEngineers, LLC.

PLOTTED ON: 4/15/2022 12:52:03 PM

FILE NAME:

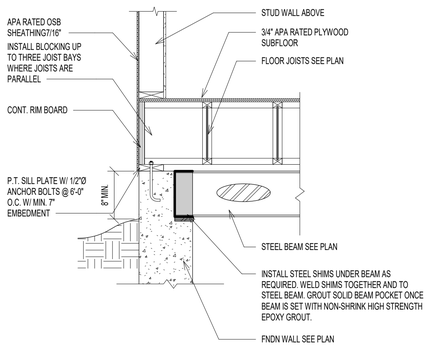

12 / SD2 TYP. STEEL BEAM POCKET DETAIL
SCALE: 3/4" = 1'-0"

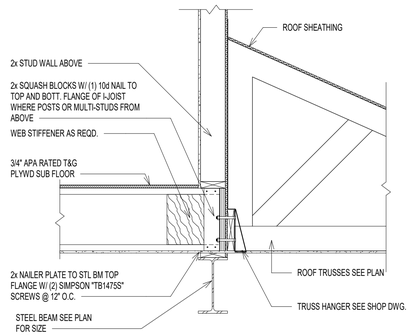

9 / SD2 SECTION @ GARAGE BEAM
SCALE: 3/4" = 1'-0"

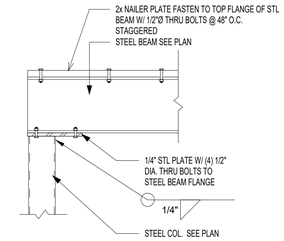

5 / SD2 STEEL BEAM TO STEEL COLUMN - END SUPPORT
SCALE: 3/4" = 1'-0"

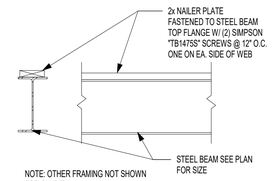

ALTERNATE FASTENERS:

NAILER PLATE MAY BE FASTENED TO TOP FLANGE W/ 1/2"Ø THRU BOLTS @ 48" O.C. STAGGERED

1 / SD2 TYP. STEEL BEAM NAILER PLATE CONNECTION
SCALE: 3/4" = 1'-0"

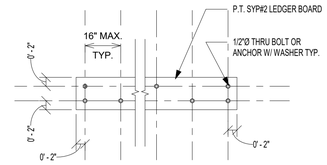

6 / SD2 TYP. DECK CONNECTION DETAIL
SCALE: 3/4" = 1'-0"

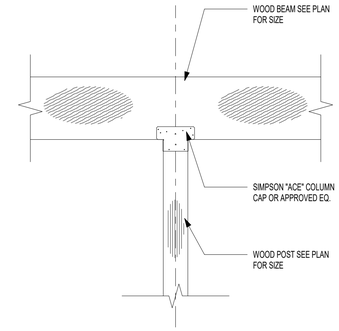

2 / SD2 INTERIOR POST W/ COL. CAP CONN.
SCALE: 3/4" = 1'-0"

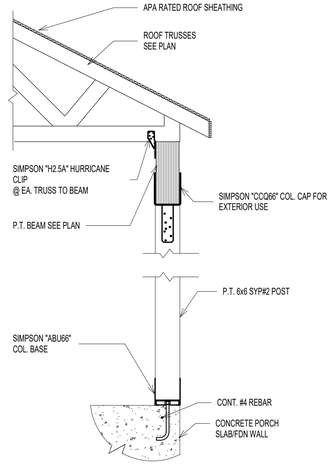

10 / SD2 SECTION AT PORCH ROOF
SCALE: 3/4" = 1'-0"

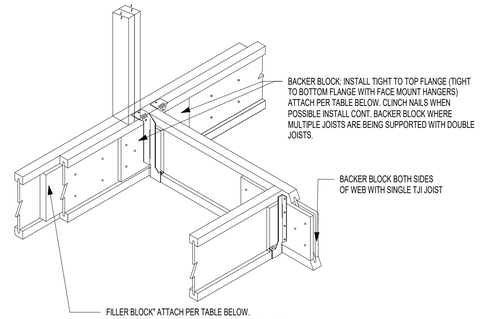

TJI	110		210		230 OR 360		560	
DEPTH	9 1/2" OR 11 7/8"	14"	9 1/2" OR 11 7/8"	14" OR 16"	9 1/2" OR 11 7/8"	14" OR 16"	11 7/8"	14" OR 16"
FILLER BLOCK (1)	2x6	2x8	2x6 + 3/8" SHEATHING	2x8 + 3/8" SHEATHING	2x6 + 1/2" SHEATHING	2x8 + 1/2" SHEATHING	(2) 2x6	(2) 2x8
BACKER BLOCK (1)	5/8" OR 3/4"		3/4" OR 7/8"		7/8" OR 1" NET		2x6	2x8

7 / SD2 TYPICAL DBL JOISTS CONNECTION W/ JOIST SUPPORTED
SCALE: 3/4" = 1'-0"

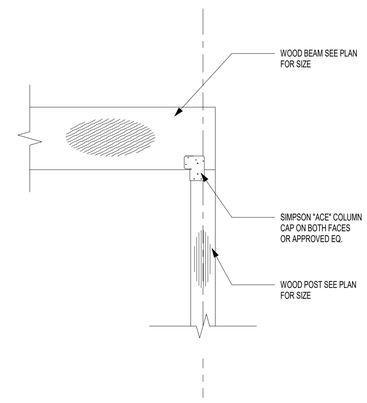

3 / SD2 END COL. TO BEAM BEARING CONNECTION
SCALE: 3/4" = 1'-0"

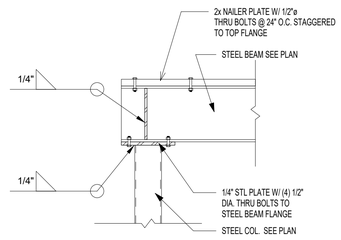

11 / SD2 SECTION
SCALE: 3/4" = 1'-0"

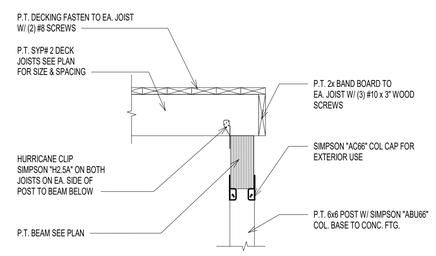

8 / SD2 TYP. DECK POST CONNECTION W/ POST FROM ABOVE
SCALE: 3/4" = 1'-0"

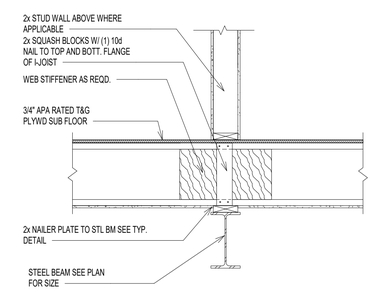

4 / SD2 TYP. JOIST BEARING ON STEEL BEAM
SCALE: 3/4" = 1'-0"

© COPYRIGHT 2016
Structural Engineering content of this drawings are property of structBIM LLC and are issued for this project only. Any re-use or re-production of these drawings shall not be done without written consent of structBIM LLC. These drawings are to be read in conjuction with project specifications and drawings from other consultants. These drawings shall not be used as shop drawings. Do not scale drawings, use dimensions as specified.

GTM ARCHITECTS

7735 OLD GEORGETOWN ROAD
SUITE 700
BETHESDA, MD 20814
(240)333-2000
(240)333-2001 FAX
WWW.GTMARCHITECTS.COM

GTM

Seal

STATE OF MARYLAND · KENDAL KAMALI · 40082 · PROFESSIONAL ENGINEER

Consultant

structBIM ENGINEERS
WE DESIGN....WE BIM
46400 BENEDICT DR, SUITE #211
PHONE: 703-657-4481
E-MAIL: info@structBIM.com

Project

19 HIGH STREET LOT 4
BROOKVILLE, MD

LOT 4

I certify that these documents were prepared or approved by me, and that I am a duly licensed Professional Engineer under the laws of the State of Maryland, license number 40082, Expiration Date: 02-13-2023.

Issue Description	*Date*

structBIM Project No.	22-0165
Checked By	KK
Drawn By	KK
Scale	3/4" = 1'-0"

Sheet Title

FRAMING DETAILS

Sheet No.

SD2

COPYRIGHT, 2016 structBIMEngineers, LLC.
PLOTTED ON: 4/15/2022 12:52:06 PM

FILE NAME:

Point Load Connector Spacing
8- Screw Connection

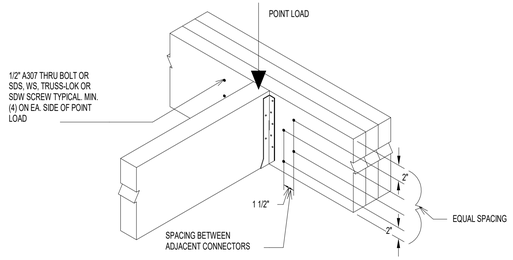

2 / SD3 LVL BEAM CONNECTION AT POINT LOAD
SCALE: 3/4" = 1'-0"

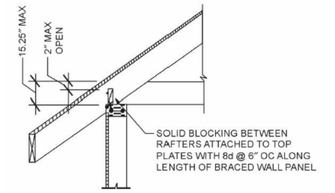

3 / SD3 TYPICAL ROOF BEARING @ BRACED WALL PANEL
SCALE: 3/4" = 1'-0"

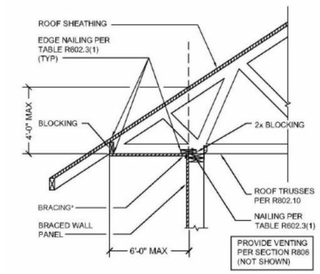

4 / SD3 TYPICAL ROOF BEARING @ BRACED WALL PANEL
SCALE: 3/4" = 1'-0"

ALLOWABLE HOLES

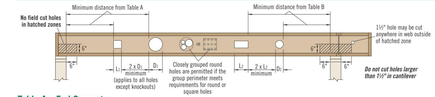

Table A—End Support

Minimum distance from edge of hole to inside face of nearest end support

Depth	TJI®	Round Hole Size 2"	3"	4"	5"	6½"	7"	8½"	11"	13"	Square or Rectangular Hole Size 2"	3"	4"	5"	6½"	7"	8½"	11"	13"
9½"	110	1'-0"	1'-0"	2'-0"	2'-0"	5'-0"					1'-0"	1'-0"	2'-0"	2'-0"	4'-0"				
	210	1'-0"	1'-0"	2'-0"	3'-0"	5'-0"					1'-0"	2'-0"	2'-0"	4'-0"	5'-0"				
	230	1'-0"	2'-0"	2'-0"	3'-0"	5'-0"					1'-0"	2'-0"	3'-0"	4'-0"	5'-0"				
11⅞"	110	1'-0"	1'-0"	1'-0"	2'-0"	2'-0"	5'-0"				1'-0"	1'-0"	1'-0"	2'-0"	4'-0"	4'-0"	6'-0"		
	210	1'-0"	1'-0"	1'-0"	1'-0"	2'-0"	3'-0"	5'-0"			1'-0"	1'-0"	2'-0"	3'-0"	5'-0"	5'-0"	6'-0"		
	230	1'-0"	1'-0"	1'-0"	2'-0"	2'-0"	3'-0"	6'-0"			1'-0"	1'-0"	2'-0"	3'-0"	5'-0"	5'-0"	7'-0"		
	360	1'-0"	1'-0"	1'-0"	2'-0"	4'-0"	5'-0"	7'-0"			1'-0"	1'-0"	2'-0"	4'-0"	6'-0"	6'-0"	7'-0"		
	560	1'-0"	1'-0"	1'-0"	3'-0"	5'-0"	5'-0"	8'-0"			1'-0"	2'-0"	3'-0"	5'-0"	7'-0"	7'-0"	8'-0"		
14"	110	1'-0"	1'-0"	1'-0"	1'-0"	1'-0"	2'-0"	5'-0"			1'-0"	1'-0"	1'-0"	1'-0"	3'-0"	4'-0"	6'-0"	8'-0"	
	210	1'-0"	1'-0"	1'-0"	1'-0"	1'-0"	1'-0"	3'-0"	6'-0"		1'-0"	1'-0"	1'-0"	2'-0"	4'-0"	4'-0"	6'-0"	8'-0"	
	230	1'-0"	1'-0"	1'-0"	1'-0"	1'-0"	2'-0"	3'-0"	6'-0"		1'-0"	1'-0"	1'-0"	2'-0"	4'-0"	5'-0"	7'-0"	9'-0"	
	360	1'-0"	1'-0"	1'-0"	1'-0"	2'-0"	3'-0"	5'-0"	8'-0"		1'-0"	1'-0"	1'-0"	2'-0"	5'-0"	5'-0"	6'-0"	9'-0"	
	560	1'-0"	1'-0"	1'-0"	1'-0"	2'-0"	3'-0"	6'-0"	9'-0"		1'-0"	1'-0"	1'-0"	3'-0"	6'-0"	6'-0"	7'-0"	9'-0"	
16"	210	1'-0"	1'-0"	1'-0"	1'-0"	1'-0"	1'-0"	3'-0"	6'-0"	9'-0"	1'-0"	1'-0"	1'-0"	1'-0"	2'-0"	3'-0"	5'-0"	9'-0"	10'-0"
	230	1'-0"	1'-0"	1'-0"	1'-0"	1'-0"	1'-0"	3'-0"	6'-0"	9'-0"	1'-0"	1'-0"	1'-0"	1'-0"	2'-0"	3'-0"	5'-0"	9'-0"	10'-0"
	360	1'-0"	1'-0"	1'-0"	1'-0"	1'-0"	2'-0"	4'-0"	6'-0"	9'-0"	1'-0"	1'-0"	1'-0"	1'-0"	4'-0"	5'-0"	9'-0"	10'-0"	11'-0"
	560	1'-0"	1'-0"	1'-0"	1'-0"	1'-0"	2'-0"	4'-0"	6'-0"	10'-0"	1'-0"	1'-0"	1'-0"	1'-0"	5'-0"	6'-0"	10'-0"	11'-0"	12'-0"

Table B—Intermediate or Cantilever Support

Minimum distance from edge of hole to inside face of nearest intermediate or cantilever support

Depth	TJI®	Round Hole Size 2"	3"	4"	5"	6½"	7"	8½"	11"	13"	Square or Rectangular Hole Size 2"	3"	4"	5"	6½"	7"	8½"	11"	13"
9½"	110	1'-0"	2'-0"	3'-0"	4'-0"	7'-0"					1'-0"	2'-0"	3'-0"	5'-0"	9'-0"				
	210	2'-0"	2'-0"	3'-0"	4'-0"	7'-0"					2'-0"	3'-0"	4'-0"	6'-0"	7'-0"				
	230	2'-0"	3'-0"	4'-0"	5'-0"	8'-0"					2'-0"	3'-0"	4'-0"	6'-0"	7'-0"				
11⅞"	110	1'-0"	1'-0"	1'-0"	2'-0"	4'-0"	8'-0"				1'-0"	1'-0"	2'-0"	4'-0"	6'-0"	7'-0"	9'-0"		
	210	1'-0"	1'-0"	2'-0"	3'-0"	5'-0"	9'-0"				1'-0"	2'-0"	3'-0"	4'-0"	7'-0"	8'-0"	10'-0"		
	230	1'-0"	2'-0"	2'-0"	3'-0"	5'-0"	9'-0"				1'-0"	2'-0"	3'-0"	5'-0"	8'-0"	8'-0"	10'-0"		
	360	2'-0"	3'-0"	4'-0"	5'-0"	7'-0"	11'-0"				2'-0"	3'-0"	5'-0"	7'-0"	9'-0"	9'-0"	11'-0"		
	560	1'-0"	3'-0"	4'-0"	5'-0"	8'-0"	8'-0"	11'-0"			3'-0"	4'-0"	6'-0"	8'-0"	10'-0"	11'-0"	12'-0"		
14"	110	1'-0"	1'-0"	1'-0"	1'-0"	2'-0"	4'-0"	8'-0"			1'-0"	1'-0"	1'-0"	2'-0"	5'-0"	6'-0"	9'-0"	12'-0"	
	210	1'-0"	1'-0"	1'-0"	1'-0"	2'-0"	3'-0"	5'-0"	9'-0"		1'-0"	1'-0"	2'-0"	3'-0"	6'-0"	7'-0"	10'-0"	12'-0"	
	230	1'-0"	1'-0"	1'-0"	2'-0"	3'-0"	3'-0"	5'-0"	10'-0"		1'-0"	1'-0"	2'-0"	4'-0"	6'-0"	7'-0"	10'-0"	13'-0"	
	360	1'-0"	1'-0"	2'-0"	3'-0"	5'-0"	6'-0"	8'-0"	12'-0"		1'-0"	2'-0"	4'-0"	5'-0"	9'-0"	10'-0"	12'-0"	14'-0"	
	560	1'-0"	1'-0"	1'-0"	3'-0"	5'-0"	6'-0"	9'-0"	13'-0"		1'-0"	3'-0"	5'-0"	7'-0"	10'-0"	11'-0"	13'-0"	15'-0"	
16"	210	1'-0"	1'-0"	1'-0"	1'-0"	1'-0"	1'-0"	3'-0"	5'-0"	8'-0"	1'-0"	1'-0"	1'-0"	2'-0"	4'-0"	5'-0"	9'-0"	12'-0"	15'-0"
	230	1'-0"	1'-0"	1'-0"	1'-0"	1'-0"	2'-0"	4'-0"	6'-0"	10'-0"	1'-0"	1'-0"	1'-0"	2'-0"	5'-0"	6'-0"	10'-0"	13'-0"	16'-0"
	360	1'-0"	1'-0"	1'-0"	1'-0"	2'-0"	4'-0"	6'-0"	10'-0"	13'-0"	1'-0"	1'-0"	2'-0"	4'-0"	7'-0"	8'-0"	13'-0"	14'-0"	17'-0"
	560	1'-0"	1'-0"	1'-0"	1'-0"	2'-0"	3'-0"	7'-0"	11'-0"	15'-0"	1'-0"	1'-0"	3'-0"	5'-0"	9'-0"	10'-0"	14'-0"	16'-0"	18'-0"

• Rectangular holes based on measurement of longest side.

How to Use These Tables

1. Using **Table A**, **Table B**, or both if required, determine the hole shape/size and select the TJI® joist and depth.
2. Scan horizontally until you intersect the correct hole size column.
3. Measurement shown is minimum distance from edge of hole to support.
4. Maintain the required minimum distance from the end **and** the intermediate or cantilever support.

General Notes

- Holes may be located vertically anywhere within the web. Leave ¼" of web (minimum) at top and bottom of hole.
- Knockouts are located in web at approximately 12" on-center; they do not affect hole placement.
- For simple span (5' minimum) uniformly loaded joists meeting the requirements of this guide, one maximum size round hole may be located at the center of the joist span **provided that no other holes occur in the joist.**
- Distances are based on the maximum uniform loads shown in this guide. For other load conditions or hole configurations, use Forte™ software or contact your iLevel representative.

1 / SD3 TYPICAL ALLOWABLE HOLE SIZES FOR I JOISTS
SCALE: 3/4" = 1'-0"

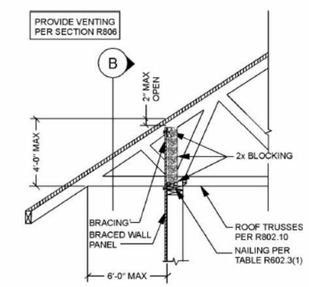

A SECTION

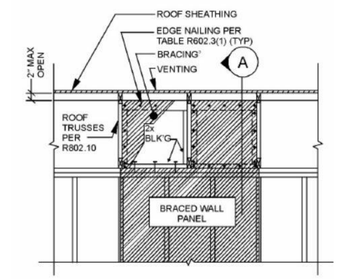

B ELEVATION

5 / SD3 TYPICAL ROOF BEARING @ BRACED WALL PANEL
SCALE: 3/4" = 1'-0"

ASSEMBLY	A	B	C	D	E	F
SKETCH	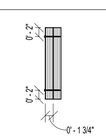	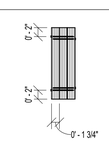	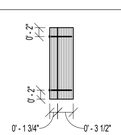	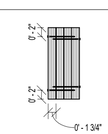	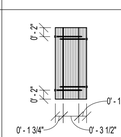	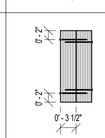
FASTNER	SIMPSON - SDW22 x 3 5/8"	SIMPSON - SDW22 x 5"	SIMPSON - SDW22 x 5"	SIMPSON - SDW22 x 6 3/4"	SIMPSON - SDW22 x 6 3/4"	SIMPSON - SDW22 x 6 3/4"
SPACING	12" O.C.	12" O.C.	12" O.C.	12" O.C.	12" O.C.	12" O.C.
NOTE		INSTALL FASTNERS FROM BOTH SIDES STAGGER BY 3" FASTENERS FROM OPPOSITE SIDES		INSTALL FASTNERS FROM BOTH SIDES STAGGER BY 3" FASTENERS FROM OPPOSITE SIDES	INSTALL FASTNERS FROM BOTH SIDES STAGGER BY 3" FASTENERS FROM OPPOSITE SIDES	INSTALL FASTNERS FROM BOTH SIDES STAGGER BY 3" FASTENERS FROM OPPOSITE SIDES

NOTES:

1. CONTACT ENGINEER FOR ALTERNATE FASTENERS IF NEEDED.
2. NOTIFY ENGINEER IF POINT LOAD IS APPLIED ON LVL BEAMS. INSTALL MIN. 8 FASTENERS ON EITHER SIDE OF POINT LOAD WITH 2" SPACING.
3. MAINTAIN MINIMUM EDGE DISTANCE OF 6" FROM ENDS.

2A / SD3 TYP. LVL PLY CONNECTION DETAIL
SCALE: 3/4" = 1'-0"

© COPYRIGHT 2016
Structural Engineering content of this drawings are property of structBIM LLC and are issued for this project only. Any re-use or re-production of these drawings shall not be done without written consent of structBIM LLC. These drawings are to be read in conjuction with project specifications and drawings from other consultants. These drawings shall not be used as shop drawings. Do not scale drawings, use dimensions as specified.

GTM ARCHITECTS

7735 OLD GEORGETOWN ROAD
SUITE 700
BETHESDA, MD 20814
(240)333-2000
(240)333-2001 FAX
WWW.GTMARCHITECTS.COM

Seal

Consultant

structBIM ENGINEERS
WE DESIGN....WE BIM
46400 BENEDICT DR, SUITE #211
PHONE: 703-657-4481
E-MAIL: info@structBIM.com

Project

19 HIGH STREET LOT 4
BROOKVILLE, MD

LOT 4

I certify that these documents were prepared or approved by me, and that I am a duly licensed Professional Engineer under the laws of the State of Maryland, license number 40082, Expiration Date: 02-13-2023.

Issue Description	*Date*

structBIM Project No.	22-0165
Checked By	KK
Drawn By	KK
Scale	3/4" = 1'-0"

Sheet Title

FRAMING DETAILS

Sheet No.

SD3

COPYRIGHT, 2016 structBIMEngineers, LLC.

PLOTTED ON: 4/15/2022 12:52:10 PM

FILE NAME:

5 | 4 | 3 | 2 | 1

STANDARDS AND CODES:

- DESIGN BUILDING CODE: INTERNATIONAL RESIDENTIAL CODE 2015 EDITION, STATE OR LOCAL JURISDICTION AMENDMENTS AND/OR ORDINANCES.
- IN ADDITION TO THE REQUIREMENTS INCLUDED IN THESE PROJECT, ALL CONSTRUCTION AND MATERIAL SHALL FURTHER CONFORM TO THE APPLICABLE PROVISIONS FROM LATEST EDITION OF FOLLOWING STANDARDS/CODES AS REQUIRED BY GOVERNING CODE OR LOCAL JURISDICTION.
- ACI (AMERICAN CONCRETE INSTITUTE)-318: BUILDING CODE REQUIREMENTS FOR STRUCTURAL CONCRETE..
- ACI-332: CODE REQUIREMENTS FOR RESIDENTIAL CONCRETE CONSTRUCTION
- ACI-530: BUILDING CODE REQUIREMENTS FOR MASONRY STRUCTURES
- AISC (AMERICAN INSTITUTE OF STEEL CONSTRUCTION): STEEL CONSTRUCTION MANUAL.
- NDS: NATIONAL DESIGN SPECIFICATIONS (NOS) FOR WOOD CONSTRUCTOIN WITH SUPPLEMENT.
- WFCM: WOOD FRAME CONSTRUCTION MANUAL FOR ONE- AND TWO- FAMILY DWELLINGS.
- AFPA: AMERICAN FOREST AND PAPER ASSOCIATOIN - SPAN TABLE FOR JOISTS AND RAFTERS.
- AISI S100: NORTH AMERICAN SPECIFICATION FOR THE DESIGN OF COLD FORMED STEEL STRUCTURAL MEMBERS.
- AISI S230: STANDARD FOR COLD-FORMED STEEL FRAMING-PRESCRIPTIVE METHOD FOR ONE- AND TWO-FAMILY DWELLINGS.
- AMERICAN INSTITUTE OF TIMBER CONSTRUCTION (AITC).
- AMERICAN NATIONAL STANDARDS INSTITUTE (ANSI).
- APA (AMERICAN PLYWOOD ASSOCIATION) E30: ENGINEERED WOOD CONSTRUCTION GUIDE
- ASCE - 5 (AMERICAN SOCIETY OF CIVIL ENGINEERS): BUILDING CODE REQUIREMENTS FOR MASONRY STRUCTURES.
- ASCE-6: SPECIFICATIONS FOR MASONRY STRUCTURES.
- ASCE-7: MINIMUM DESIGN LOADS FOR BUILDING AND OTHER STRUCTURES.
- AMERICAN WOOD COUNCIL (AWC).
- AMERICAN SOCIETY FOR TESTING AND MATERIALS (ASTM).
- AMERICAN WOOD PROTECTION ASSOCIATION (AWPA).
- AMERICAN WELDING SOCIETY (AWS).
- FEDERAL EMERGENCY MANAGEMENT AGENCY (FEMA).
- GYPSUM ASSOCIATION (GA).
- NATIONAL CONCRETE MASONRY ASSOCIATION (NCMA).
- SSPC: STEEL STRUCTURES PAINTING COUNCIL.
- TPI-I: NATOINAL DESIGN STANDARDS FOR METAL-PLATE-CONNECTED WOOD TRUSS CONSTRUCTION.

DESIGN LOADS:

DESCRIPTION	DEAD LOAD	LIVE LOAD	SNOW LOAD (b)
ROOF	17 PSF	-	30 PSF
FLOOR	15 PSF	40 PSF	-
ATTIC W/OUT STORAGE	10 PSF	10 PSF	-
ATTIC W/ LIMITED STORAGE	10 PSF	20 PSF	-
HABITABLE ATTICS & ATTICS W/ FIXED STAIR	10 PSF	30 PSF	-
SLEEPING ROOMS	10 PSF	30 PSF	-
BALCONIES & DECKS	10 PSF	40 PSF	-
STAIRS	10 PSF	40 PSF	-
GUARD RAILS & HAND RAILS	-	200 LBS (c)	-

WIND LOAD:

- WIND SPEED (ULTIMATE): 115 MPH
- WIND PRESSURE: 18 PSF (f)
- WIND EXPOSURE CATEGORY: B

FOUNDATION DESIGN LOADS:

- SOIL BEARING CAPACITY (g): 2000 PSF
- LATERAL EARTH PRESSURE: 60 PSF/FT

EARTHQUAKE LOADS:

- SEISMIC DESIGN CATEGORY: B
- SITE CLASS: B

NOTES:

a. REFER TO IRC TABLE R301.5 FOR MORE INFORMATION.
b. SNOW LOAD SPECIFIED IS GROUND SNOW LOAD ONLY.
c. A SINGLE CONCENTRATED LOAD APPLIED IN ANY DIRECTION AT ANY POINT ALONG THE TOP.
d. MECHANICAL EQUIPMENT LOADS IN EXCESS OF 200 LBS SHALL BE NOTIFIED TO STRUCTURAL ENGINEER.
e. PRE-FABRICATED STRUCTURAL COMPONENT SHALL COMPLY WITH DESIGN LOADS FROM APPLICABLE CODES/STANDARDS IN ADDITION TO LOADS SPECIFIED IN THESE NOTES.
f. WIND PRESSURE SPECIFIED IS FOR MAIN WIND FORCE RESISTING SYSTEM ONLY. WIND PRESSURE & LOADS FOR STRUCTURAL COMPONENTS AND CLADDING SHALL BE DETERMINED BY RESPECTIVE REGISTERED DESIGN PROFESSIONAL PER APPLICABLE STANDARDS/CODES.
g. SOIL BEARING CAPACITY IS ASSUMED UNLESS GEOTECHNICAL REPORT IS PROVIDED PER SITE WORK SECTION.

DEFLECTION CRITERIA:

DESCRIPTION	TOTAL LOAD	LIVE LOAD
ROOF TRUSSES/RAFTERS/CEILING JOISTS	L/240	L/360 OR 1/2" MAX.
FLOOR JOISTS/FLOOR TRUSSES	L/240	L/480 OR 1/2" MAX.
MEMBERS SUPPORTING BRICK/ HORIZONTAL MASONRY MEMBERS	L/600 OR 0.3" MAX.	
JOISTS/TRUSSES SUPPORTING CERAMIC TILE	L/720	

SITE WORK:

- GEOTECHNICAL REPORT WAS NOT PROVIDED AND FOUNDATION DESIGN IS BASED ON ASSUMED SOIL DESIGN CRITERIA AND SHALL BE FIELD VERIFIED.
- BOTTOM OF ALL EXTERIOR FOOTING SHALL BE MINIMUM FROST DEPTH OF 30 INCHES BELOW GRADE OR AS REQUIRED BY GOVERNING AUTHORITY OR CODE, AND SHALL PROJECT 12" IN TO UNDISTURBED VIRGIN SOIL OR ENGINEERED FILL.
- SOIL BEARING CAPACITY SHALL BE VERIFIED ON-SITE BY GEOTECHNICAL ENGINEER.
- ALL BEARING STRATA SHALL BE ADEQUATELY DRAINED PRIOR TO PLACING FOUNDATION CONCRETE.
- THE SIDES OF FOOTINGS MAY BE EARTH-FORMED IF THE EXCAVATION CAN BE KEPT VERTICAL CLEAN AND STABLE. OTHERWISE FORMS MUST BE USED.
- UNBRACED EXCAVATIONS SHALL BE SLOPED NO GRATER THAN 2:1.
- NO EXCAVATION SHALL BE CLOSER THAN ATLEAST A SLOPE OF 2:1 TO THE UNDERSIDE OF ANY EXISTING OR NEW FOOTING WITHOUT THE WRITTEN AND CERTIFIED PERMISSION FROM GEOTECHNICAL ENGINEER.
- STEP FOOTINGS SHALL BE PROVIDED WITH A RATIO OF 2:1.
- FOUNDATION ELEMENTS THAT ARE TO SUPPORT FILL ON BOTH SIDES SHALL BE BACKFILLED SIMULTANEOUSLY AND UNIFORMLY ON BOTH SIDES.
- FOUNDATION ELEMENTS THAT ARE TO SUPPORT FILL ON ONE SIDE ONLY SHALL BE PROPERLY BRACED BY PERMANENT STRUCTURAL ELEMENTS PRIOR TO BACKFILLING. PROVIDE TEMPORARY BRACING AS REQUIRED UNTIL PERMANENT BRACING IN PLACE AND FOUNDATION WALL ACHIEVES DESIRED STRENGTH.
- ENGINEERED FILLS HALL BE PLACED IN 8" MAXIMUM HEIGHT LOOSE LIFTS AND COMPACTED TO 95% OF MAXIMUM DRY DENSITY AT OPTIMUM MOISTURE CONTENT AS ESTABLISHED BY ASTM D-698.
- NO PORTION OF THE STRUCTURAL DRAWINGS SHALL BE USED AS SHOP DRAWINGS. CONTRACTOR IS RESPONSIBLE FOR FURNISHING SHOP DRAWINGS AND SHALL SUBMIT TO ENGINEER OF RECORD FOR REVIEW.
- PROVIDE SHORING AND PROTECTION FOR EXCAVATION BANKS AS NECESSARY TO AVOID CAVING
- PROVIDE 6 MIL POLYETHYLENE VAPOR VARIOUS UNDER SLAB ON GRADE OR AS RECOMMENDED BY GEOTECHNICAL ENGINEER.
- ALL RECOMMENDATIONS SPECIFIED IN GEOTECHNICAL REPORT SHALL BE FOLLOWED ALL THE TIME AND SHALL GOVERN.

GENERAL

- STRUCTURAL ENGINEERING DRAWINGS PREPARED IN THIS SET ARE BASED ON ARCHITECTURAL DRAWINGS AND PROVIDED INFORMATION AND SHALL BE READ IN CONJUNCTION WITH ARCHITECTURAL DRAWINGS.
- DETAILS, SECTIONS AND NOTES SHOWN ON THESE DRAWINGS ARE INTENDED TO BE TYPICAL AND SHALL BE APPLY TO SIMILAR CONDITIONS ELSEWHERE OTHERWISE SHOWN OR NOTED.
- THE STRUCTURAL INTEGRITY OF THE BUILDING IS DEPENDENT UPON COMPLETION OF WORK ACCORDING TO CONTRACT DRAWINGS AND SPECIFICATIONS. THE STRUCTURAL ENGINEER ASSUMES NO LIABILITY FOR THE STRUCTURE DURING CONSTRUCTION. THE METHODS OF CONSTRUCTION AND SEQUENCE OF OPERATIONS IS THE SOLE RESPONSIBILITY OF OWNER/CONTRACTOR.
- TEMPORARY BRACING AND SHORING SHALL BE RESPONSIBILITY OF CONTRACTOR AND SHALL BE DESIGNED BY SPECIALITY ENGINEER PER APPLICABLE CODES/STANDARDS TO ENSURE VERTICAL AND LATERAL STABILITY OF THE STRUCTURE OR PORTION THEREOF DURING THE CONSTRUCTION.
- THE CONTRACTOR SHALL BE RESPONSIBLE FOR PROVIDING NECESSARY UNDERPINNING OR BRACING FOR EXISTING STRUCTURE OR PORTION THEREOF. STRUCTURAL ENGINEER IS NOT RESPONSIBLE FOR ANY DESIGN OR PROVISIONS OF ANY TEMPORARY STRUCTURES.
- DO NOT CHANGE SIZE OR DIMENSIONS OF STRUCTURAL ELEMENTS WITHOUT WRITTEN PERMISSION FROM STRUCTURAL ENGINEER.
- DO NOT SCALE THE DRAWINGS, USE DIMENSIONS SHOWN. COORDINATE AND VERIFY ALL DIMENSIONS WITH ARCHITECTURAL DRAWINGS. ARCHITECTURAL DRAWINGS SUPERCEDES ALL DIMENSIONS SHOWN IN THESE DRAWINGS.
- GENERAL CONTRACTOR IS RESPONSIBLE TO PERFORM ALL NECESSARY TESTINGS PER GOVERNING ASTM STANDARDS FOR SOIL, CONCRETE OR ANY OTHER MATERIALS INVOLVED IN THE PROJECT AND SHOP DRAWINGS OF SUCH DESIGN OR REPORTS OF TESTING SHALL BE SUBMITTED TO ARCHITECT/ENGINEER FOR RECORD AND APPROVAL. ALL SUCH DESIGN OR TEST RESULTS SHALL BE SIGNED AND SEALED BY LICENSED PROFESSIONAL IN STATE OR JURISDICTION WHERE THE PROJECT IS LOCATED.

CAST-IN-PLACE CONCRETE:

- CONCRETE DESIGN AND DETAILING SHALL CONFORM TO THE REQUIREMENTS OF ACI 318 AND ACI 301, LATEST EDITIONS. CONTRACTOR SHALL SUBMIT MIX DESIGNS ACCOMPANIED BY APPROPRIATE GRAPHS AND BACKGROUND DATA FOR APPROVAL. MIX DESIGN SHALL INDICATE 7 AND 28 DAYS STRENGTHS, CEMENT CONTENT, AIR CONTENT, WATER-CEMENT RATIO, AMOUNT OF FINE AND COARSE AGGREGATES, AND ADMIXTURES.
- ALL REINFORCING STEEL SHALL BE DEFORMED BILLET STEEL CONFORMING TO ASTM A615 GRADE 60 AND DETAILED, FABRICATED AND PLACED CONFORMING TO MANUAL OF STANDARD PRACTICE FOR DETAILING CONCRETE STRUCTURES (ACI 315)
- ALL WELDED WIRE FABRIC SHALL CONFORM TO ASTM A185. ALL MESH EDGES SHALL LAP A MIN. OF 2 SQUARES.
- CONCRETE COMPRESSIVE STRENGTHS AT 28 DAYS SHALL BE 3000 psi FOR FOOTINGS, FOUNDATION WALLS AND SLAB ON GRADE IN ENCLOSED SPACES & 3500 psi FOR HORIZONTAL SURFACES EXPOSED TO WEATHER.
- SLUMP AT THE POINT OF DISCHARGE IN TO THE FORMS SHALL BE 4" +/- 1" FOR VERTICAL ELEMENTS AND 6" +/- 1" FOR HORIZONTAL ELEMENTS.
- CAST-IN-PLACE CONCRETE SHALL BE READY-MIX PER ASTM C94.
- ALL CONCRETE EXPOSED TO WEATHER SHALL HAVE A MIN. AIR ENTRAINMENT OF 6% +/- 1% PER ACI 318-08; SECTION: 4.4.1.
- PROVIDE CORNER BARS AT ALL WALL AND FOOTING INTERSECTIONS AND MATCH CONTINUING REINFORCEMENT.
- SEE ARCHITECTURAL DRAWINGS FOR NECESSARY CONCRETE FINISHES.
- RESTRICT ADDITION OF MIX WATER AT THE JOB SITE. DO NOT ADD WATER WITHOUT APPROVAL OF THE INSPECTIONS ENGINEER AND DO NOT EXCEED SLUMP LIMITATIONS.
- ALL GROUTS SHALL BE PRE-MIXED NON-SHRINKABLE, NON-METALLIC FORMULA PRO CONFORMING TO ASTMC827, AND SHALL HAVE A SPECIFIED COMPRESSIVE STRENGTH OF 3000 psi WITHIN 24 HOURS AND 6000 psi AT 28 DAYS. PRE-GROUTING OF BASE PLATES WILL NOT BE PERMITTED.
- PROVIDE KEYED JOINTS BETWEEN ALL NON-MONOLITHIC INTERSECTING CONCRETE ELEMENTS AND JOINTS.
- CONTRACTOR SHALL VERIFY EMBEDDED ITEMS, INCLUDING BUT NOT LIMITED TO ANCHOR BOLTS, BOLT CLUSTERS, WELD PLATES etc. BEFORE PLACING CONCRETE. NOTIFY ENGINEER OF ANY CONFLICTS WITH REBAR.
- CONCRETE EXPOSED TO WEATHER SHALL BE AIR ENTRAINED. TOTAL AIR CONTENT (BY PERCENT OF CONCRETE VOLUME) SHALL BE NOT LESS THAN 5% OR MORE THAN 7%.
- GENERAL CONTRACTOR IS RESPONSIBLE FOR SUBMITTING SHOP DRAWINGS SIGNED AND SEALED BY REGISTERED DESIGN PROFESSIONAL THAT INCLUDES: 1. CONCRETE MIX DESIGN 2. DETAILED REINFORCEMENT SHOP DRAWINGS PER ACI 318 AND ACI DETAILING MANUAL. 3. FORM WORK, SHORING, RE-SHORING OR UNDERPINNING SHOP DRAWINGS AS REQUIRED FOR PROJECT.

REINFORCING STEEL:

- REINFORCING BARS SHALL BE DEFORMED BILLET STEEL CONFORMING TO ASTM A615. REINFORCING BARS SHALL BE GRADE 60, UNLESS NOTED OTHERWISE.
- PLAIN BARS FOR SPIRAL REINFORCEMENT SHALL CONFORM TO ASTM A 615, GRADE 60.
- PLAIN STEEL WELDED WIRE REINFORCEMENT SHALL CONFORM TO ASTM A185.
- WELDED DEFORMED STEEL BAR MATS FOR CONCRETE REINFORCEMENT SHALL CONFORM TO ASTM A184.
- BARS SHALL BE BRANDED BY THE MANUFACTURER WITH BAR SIZE AND GRADE OF STEEL AND CERTIFIED MILL REPORTS SHALL BE SUBMITTED FOR RECORD.
- REINFORCING STEEL SHALL BE DETAILED IN ACCORDANCE WITH THE ACI "MANUAL OF STANDARD PRACTICE FOR DETAILING REINFORCED CONCRETE STRUCTURES", LATEST EDITION.
- PROVIDE MINIMUM CLEAR CONCRETE COVER (a) FOR REINFORCEMENT AS SPECIFIED BELOW UNLESS SPECIFICALLY NOTED OTHERWISE ON THE PLANS:

DESCRIPTION			MIN. COVER (IN.)
CONCRETE CAST AGAINST AND PERMENANTLY EXPOSED TO EARTH			3"
CONCRETE EXPOSED TO EARTH OR WEATHER	#6 THROUGH #18 BARS		2"
	#5 BAR, W31 OR D31 WIRE AND SMALLER		1 1/2"
CONCRETE NOT EXPOSED TO EARTH OR WEATHER	SLAB, WALLS, JOISTS		3/4"
	BEAMS, COLUMNS (PRIMARY REINF., TIES, STIRRUPS, SPIRALS.		1 1/2"
	SHELLS, FOLDED PLATES	#6 BARS AND LARGER	3/4"
		#5 BAR, W31 OR D31 WIRE, AND SMALLER	1/2"

MASONRY:

- CONCRETE BLOCKS USED IN WALLS SHALL CONFORM TO ASTM C90. BRICK SHALL CONFORM TO ASTM C62 AND ASTM C216, AS APPLICABLE. MORTAR FOR BRICK VENEER AND OTHER MASONRY SHALL CONFORM TO ASTM C270, TYPE N. TYPE S MORTAR SHALL BE USED TYPICAL FOR ALL MASONRY, AND TYPE M MORTAR SHALL BE USED FOR BELOW GRADE MASONRY AND/OR MASONRY IN CONTACT WITH SOIL, U.N.O.
- HOLLOW LOAD BEARING UNITS SHALL CONFORM TO ASTM C90, NORMAL WEIGHT TYPE II WITH A MIN. NET COMPRESSIVE UNIT STRENGTH OF 1900 psi. (NET AREA COMPRESSIVE MASONRY STRENGTH fm' = 1500 psi)
- REINFORCED MASONRY WALLS SHALL BE BUILT SUCH THAT CELLS LINE UP VERTICALLY.
- FILLED CELLS SHALL BE FILLED WITH COARSE GROUT. COARSE GROUT SHALL CONFORM TO ASTM C476. PROPERTIES SHALL INCLUDE: 2500 psi AT 28 DAYS, 3/8" MAXIMUM AGGREGATE AND 8"-11" SLUMP. FILLED CELLS MAY ALTERNATIVELY BE FILLED WITH A 3000 psi PEA GRAVEL MIX CONCRETE. TEH PEA GRAVEL MIX SHALL BE PROPORTIONED WITH A MAXIMUM AGGREGATE SIZE OF 3/8" DIAMETER TO PROVIDE A MIN. OF 1/2" CLEARANCE, ADDITIONALLY, THE PEA GRAVEL MIX SHALL PROVIDE AN 8" TO 11" SLUMP.
- A CONTINUOUS REINFORCED CMU/CONCRETE BOND BEAM SHALL BE PROVIDED ON TOP OF EACH WALL. BOND BEAMS SHALL BE MIN. 8"x8" WITH CONTINUOUS (2) #4 REBARS.
- WHERE EXPANSION OR ANY OTHER ANCHORS ARE SHOWN, MASONRY CELLS SHALL BE FULLY GROUTED AT MINIMUM OF 8" ABOVE AND BELOW EACH EXPANSION ANCHOR OR ANY OTHER ANCHORS UNLESS NOTED OTHERWISE.
- UNLESS NOTED OTHERWISE ON PLANS, PROVIDE A MIN. OF (2) FULLY GROUTED COURSES BY 32" LENGTH AT ALL STRUCTURAL STEEL BEARING.
- VERTICAL REINFORCING BARS SHALL BE HELD IN POSITION WITH BAR POSITIONERS @ 8'-0" O.C., AT TOP AND BOTTOM OF BAR WITH MIN. CLEARANCE OF 1/2" FROM MASONRY. THE CLEAR DISTANCE BETWEEN BARS SHALL NOT BE LESS THAN ONE BAR DIAMETER NOR LESS THAN 1". CENTER BARS IN WALLS UNLESS NOTED OTHERWISE.
- REINFORCING BARS SHALL BE STRAIGHT EXCEPT FOR BENDS AROUND CORNERS.
- MIN. LAP SPLICE SHALL BE 36 BAR DIAMETERS. WIRE TIE LAP SPLICES.
- WHEN A FOUNDATION DOWEL DOESN'T LINE UP WITH A VERTICAL CORE. IT SHALL NOT BE SLOPED MORE THAN 1:6. DOWELS SHALL BE GROUTED IN TO A CORE IN VERTICAL ALIGNMENT, EVEN IF IT IS IN A CELL ADJACENT TO VERTICAL WALL REINFORCEMENT.
- HORIZONTAL WALL REINFORCING SHALL BE ZINC COATED COLD DRAWN TRUSS TYPE DUR-O-WALL (OR EQUIVALENT) CONFORMING TO ASTM A82 SPACED AT 16' O.C. MAX. HORIZONTAL JOINT REINFORCING SHALL CONSIST OF (2) 9 GA OR LARGER HORIZONTAL BARS WELD CONNECTED WITH 12 GA OR LARGER CROSS-WIRES. ZINC COATING CONFORM TO ASTM A116-73. LAP SPLICE JOINT REINFORCEMENT 12-INCHES MIN.
- PROVIDE HORIZONTAL JOINT REINFORCEMENT AT MASONRY OPENINGS SUCH AS DOORS AND WINDOWS. CONTINUE JOINT REINFORCING FOR THE FIRST AND SECOND BLOCK COURSE ABOVE AND BELOW MASONRY OPENING. EXTEND JOINT REINFORCING A MIN. OF TWO FEET BEYOND OPENINGS.
- CLEANOUTS SHALL BE PROVIDED IN THE BOTTOM COURSE OF MASNORY IN EACH GROUT POUR WHEN THE POUR HEIGHT EXCEEDS 5'. CLEANOUTS SHALL BE SAW-CUT 4" x 4".
- GROUT POUR HEIGHT SHALL NOT EXCEED 24'. PLACE GROUT IN 5' MAX. LIFTS HEIGHTS.
- CONSOLIDATE GROUT POURS AT THE TIME OF PLACEMENT BY MECHANICAL MEANS AND RECONSOLIDATE AFTER INITIAL WATER LOSS AND SETTLEMENT.
- STORE BLOCKS ON PALLETS AND COVER WITH VISQUEEN.
- PLACE ALL MASONRY IN RUNNING BOND WITH 3/8" MORTAR JOINTS. PROVIDE COMPLETE COVERAGE FACE SHELL MORTAR BEDDING HORIZONTAL AND VERTICALL FULLY MORTAR WEBS IN ALL COURSES OF PIERS, COLUMNS, AND PILASTERS AND ADJACENT TO GROUT CELLS.
- MASONRY CONTROL JOINTS SHALL BE INSTALLED AT LOCATIONS INDICATED ON DRAWINGS. ADDITIONALLY INSTALL MASONRY CONTROL JOINTS SPACE AT 26'-0" O.C.

STRUCTURAL STEEL:

- STRUCTURAL STEEL SHALL CONFORM TO THE LATEST EDITION OF THE AISC "SPECIFICATION FOR THE DESIGN, FABRICATION AND ERECTION OF STRUCTURAL STEEL FOR BUILDINGS".
- ALL W SHAPE STEEL SHALL CONFORM TO ASTM 992 (Fy = 50 KSI).
- ALL HOLLOW STRUCTURAL SECTIONS (HSS) SHALL CONFORM TO ASTM A500, GRADE B.
- ALL OTHER STRUCTURAL STEEL SHALL CONFORM TO ASTM A36 (Fy = 36 KSI).
- ALL ANCHOR BOLTS SHALL CONFORM TO ASTM A307 U.N.O.
- ALL HIGH STRENGTH BOLTS SHALL CONFORM TO ASTM A325 U.N.O.
- BOLTED CONNECTIONS SHALL USE HIGH STRENGTH BOLTS.
- BOLTS IN MOMENT FRAMES SHALL USE HIGH STRENGTH SLIP CRITICAL BOLTS. SLIP CRITICAL CONNECTIONS SHALL HAVE CONTACT SURFACES MEETING CLASS A SURFACE CONDITIONS.
- WELDED CONNECTIONS SHALL CONFORM TO THE LATEST EDITION OF AMERICAN WELDING SOCIETY CODE, AWS D11.
- ALL WELDED CONNECTIONS SHALL USE E70XX, LOW HIDROGEN ELECTRODES U.N.O. ELECTRODES SHALL BE PROTECTED FROM MOISTURE.
- BOLTED CONNECTIONS SHALL CONFORM TO THE REQUIREMENTS OF "SPECIFICATIONS FOR STRUCTURAL JOINTS USING ASTM A325 OR A490 BOLTS" AS APPROVED BY RESEARCH COUNCIL ON STRUCTURAL CONNECTIONS (RCSC). USE BEARING TYPE BOLTS WITH THREAD ALLOWED ACROSS THE SHEAR PLANE.
- ALL STEEL CONNECTIONS SHALL BE WELDED AROUND WITH 1/4" FILLET WELD UNLESS OTHERWISE NOTED, EXCEPT FOR SLOTTED CONNECTIONS.
- EXPANSION BOLTS SHALL BE GALVANIZED CARBON STEEL COMPONENTS, ZINC-PLATED TO COMPLY WITH ASTM B 633 AND FF-S 325, GROUP II, TYPE 4, CLASS I.
- FULL PENETRATION WELDS SHALL BE MADE AGAINST A 1/8" x 1" BACKER PLATE TACK WELDED IN PLACE BELOW THE WELD. PENETRATION WELDS SHALL BE EQUIVALENT IN DEPTH AND LENGTH TO THE PARTS JOINED.
- SUBMIT ALL STRUCTURAL STEEL/LIGHT GAGE SHOP DRAWINGS SIGNED AND SEALED BY A REGISTERED PROFESSIONAL ENGINEER. SHOP DRAWINGS SHALL INCLUDE MEMBER SIZES, MATERIAL SPECIFICATION, CONNECTIONS AND/OR ANY OTHER ITEMS REQUIRED BY GOVERNING BUILDING CODE OR JURISDICTION.
- NO FABRICATION SHALL BE STARTED PRIOR TO SHOP DRAWINGS APPROVAL.

STRUCTURAL LUMBER:

- WOOD CONSTRUCTION, INCLUDING LUMBER, CONNECTIONS, AND DETAILS SHALL COMPLY WITH THE REQUIREMENTS OF AMERICAN INSTITUTE OF TIMBER CONSTRUCTION AND THE NATIONAL FOREST AND PAPER ASSOCIATION'S CURRENT "NATIONAL DESIGN SPECIFICATION FOR WOOD CONSTRUCTION".
- ALL STRUCTURAL WOOD MEMBERS SHALL COMPLY WITH FOLLOWING MINIMUM DESIGN VALUES:

SPECIES		Fb	Ft (a)	Fv (a)	Fc ⊥ (a)	Fc II (b)	E	Emin
HEMFIR #2		850 psi	525 psi	150 psi	405 psi	1300 psi	1300000 psi	470000 psi
SPF #2		875 psi	450 psi	135 psi	425 psi	1150 psi	1400000 psi	510000 psi
THICKNESS	WIDTH	SOUTHERN PINE #2						
2" TO 4"	2" TO 4"	1100 psi	675 psi	175 psi	565 psi	1450 psi	1400000 psi	510000 psi
	5" TO 6"	1000 psi	600 psi	175 psi	565 psi	1400 psi	1400000 psi	510000 psi
	8"	925 psi	550 psi	175 psi	565 psi	1350 psi	1400000 psi	510000 psi
	10"	800 psi	475 psi	175 psi	565 psi	1300 psi	1400000 psi	510000 psi
	12"	750 psi	450 psi	175 psi	565 psi	1250 psi	1400000 psi	510000 psi
MICROLAM LVL (ML)		2600 psi	1555 psi	285 psi	750 psi	2510 psi	1900000 psi	965710 psi
PARALLAM PSL 1.8E		2400 psi	1755 psi	190 psi	425 psi	2500 psi	1800000 psi	914880 psi
PARALLAM PSL 2.0E		2900 psi	2025 psi	290 psi	750 psi	2900 psi	2000000psi	1016535 psi
TIMBERSTRAND LSL1.3E		1900 psi	1075 psi	400 psi	680 psi	1400 psi	1300000psi	660750 psi
TIMBERSTRAND LSL1.55E		2325 psi	1070 psi	310 psi	800 psi	2050 psi	1550000psi	787815 psi

- ALL EXTERIOR WOOD MEMBERS EXPOSED TO WEATHER SHALL BE PRESSURE TREATED PER APPLICABLE CODES/STANDARDS.
- ALL FASTENERS/HARDWARE EXPOSED TO WEATHER OR IN CONTACT WITH TREATED WOOD SHALL BE HOT DIP GALVANIZED OR STAINLESS STEEL OR Z-MAX COATED OR APPROVED FOR SUCH USE BY MANUFACTURER.
- PREVENT DIRECT CONTACT OF INTERIOR WOOD WITH CONCRETE OR MASONRY. PROTECT ALL WOOD FROM MOISTURE BY APPLYING APPROVED WRAP AND AVOID DIRECT CONTACT WITH MASONRY OR CONCRETE.
- CONTRACTOR SHALL SUBMIT SHOP DRAWINGS FOR ENGINEER'S REVIEW AND APPROVAL PRIOR TO ORDERING JOISTS FOR CONSTRUCTION.
- FLOOR & ROOF FRAMING/DIRECTION SHOWN ON THE DRAWINGS ARE SCHEMATIC AND FOR REFERENCE ONLY AND SHALL NOT BE CONSIDERED AS SHOP DRAWINGS. SHOP DRAWINGS FROM MANUFACTRER SHALL BE FOLLOWED FOR JOIST/TRUSS PLACEMENTS.
- ALL MECHANICAL, PLUMBING ELECTRICAL OR ANY OTHER COMPONENTS FROM OTHER DISCIPLINES SHALL BE COORDINATED BY MANUFACTURER IN SHOP DRAWINGS AS WELL AS ON THE FIELD. NOTIFY ARCHITECT/STRUCTURAL ENGINEER IF ANY DESCRIPANCY OR CONFLICT FOUND.
- ALL STRUCTURAL FRAMING MEMBERS SUPPORTING FLOOR JOISTS/TRUSSES ARE DESIGNED BASED ON LAYOUT REPRESENTED ON DRAWINGS. ANY MODIFICATION, CHANGE OR ADDITION SHALL NOT BE DONE WITHOUT PRIOR APPROVAL BY ARCHITECT/ENGINEER. SHOP DRAWINGS SHALL BE SUBMITTED FOR REVIEW FOR ANY SUCH CHANGE.
- ROOF/FLOOR TRUSS MANUFACTURER SHALL PROVIDE NECESSARY BRACING TO WEB MEMBERS AS REQUIRED BY GOVERNING CODE/STANDARD.
- ALL ROOF SHEATHING SHALL BE APA RATED 7/16" C-C, C-D OR STRUCTURAL II WITH SPAN RATING OF 48/24 PER "AMERICAN PLYWOOD ASSOCIATION". PROVIDE MIN. NAILING PATTERN W/ 8d COMMON NAILS @ 6" O.C. ON EDGES AND 12" O.C. IN FIELD. PROVIDE PLYWOOD CLIPS AT PLYWOOD EDGES BETWEEN EACH FRAMING MEMBER.
- ALL FLOOR SHEATHING SHALL BE 3/4" THICK T&G APA RATED AND WITH SPAN RATING OF 48/24 OR STURD-I-FLOOR 24" O.C. RATED PLYWOOD SHALL BE GLUED AND NAILED. INSTALL 100% GLUE LINE AND MIN. NAILING PATTERN OF 10d COMMON NAILS @ 6" O.C. ON EDGE SUPPORTS AND 12" O.C. INTERMEDIATE SUPPORTS.
- ALL EXTERIR STUD WALL SHEATHING SHALL BE MIN. 7/16" APA RATED NAILED WITH 8d NAILS @ 6" O.C. ON EDGES AND 12" O.C. IN FIELD U.N.O. REFER TO SHEAR WALL SCHEDULE FOR MORE INFORMATION.
- ALL WOOD PLATE SPLICES SHALL BE STAGGERED AT 4'-0" MIN.
- PROVIDE MIN. (2) 2x12 UP TO 4'-0" SPAN, (2) ML10 FOR 4'-0" TO 6'-0" SPAN, (2) ML12 FOR 6'-0" TO 9'-0" SPAN WHERE HEADER/LINTEL/BEAM SIZES ARE NOT SPECIFIED ON PLANS. ANY SPANS LARGER THAN 9'-0" SUPPORITNG FRAMING MEMBERS (POSTS/BEAMS/BEARING WALLS) AND NOT SPECIFIED ON PLANS SHALL BE NOTIFIED TO ENGINEER IMMEDIATELY.
- PROVIDE MIN. DOUBLE JOISTS OR SPECIAL FLOOR TRUSS UNDER (2) 2x POSTS AND (2) PLY MICROLAM LVL OR SPECIAL FLOOR TRUSS TO MATCH FLOOR THICKNESS UNDER (3) 2x POSTS UNLESS NOTED OTHERWISE ON THE PLAN. CONTRACTOR SHALL NOTIFY ENGINEER FOR SUPPORTING STRUCTURAL MEMBER FOR ALL OTHER POST SIZES COMING FROM ABOVE.
- PROVIDE MIN. (3) 2x POSTS UNDER ALL BEAMS/GIRDER TRUSSES/HEADERS U.N.O. ON PLANS.
- PROVIDE SOLID BLOCKING WITHIN FLOOR SYSTEM FOR POSTS/JACKSTUDS COMING FROM ABOVE.
- ALL POSTS/JACKS SHALL CONTINUE DOWN TO FOUNDATION/STRUCTURAL MEMBERS SUCH AS BEAMS/GIRDERS/GIRDER TRUSSES. NOTIFY ENGINEER IF ANY DESCRIPANCY FOUND DURING CONSTRUCTION.
- PROVIDE DOUBLE JOISTS OR SPECIAL TRUSS UNDER ALL WALLS/PARTITIONS EXTEND 1/2 OR MORE OF FRAMING SPAN.
- PROVIDE BLOCKING BETWEEN TOP FLANGE/CHORD OF JOISTS/FLOOR TRUSS SUPPORTING PARTITION WALL FROM ABOVE.
- PROVIDE FULL HEIGHT BLOCKING BETWEEN FLOOR JOISTS/TRUSSES SUPPORTING BEARING WALL FROM ABOVE.
- ALL DIMENSION LUMBER SHALL BE DRESSED S4S AND SHALL BEAR GRADE STAMP OF THE MANUFACTURER'S ASSOCIATION.
- ALL LUMBER SHALL BE SEASONED AND FREE FROM WRAP.
- PROVIDE SOLID BLOCKING BETWEEN JOISTS AND RAFTERS AT ALL BEARING POINTS AND AT MIN. OF 8'-0" O.C.
- PROVIDE STRONG BACKS AT MIN. OF 10'-0" O.C. AT ALL FLOOR TRUSSES.
- PROVIDE CONTINUOUS RIM BOARD AT PERIMETER AND AT END BEARING WALLS WHEN I-JOISTS ARE USED FOR FLOOR FRAMING.
- PROVIDE MIN. 1 3/4" BEARING AT END AND 3 1/2" MIN. BEARING AT INTERMEDIATE SUPPORT WHEN I-JOISTS ARE USED FOR FLOOR FRAMING.
- PROVIDE WEB-STIFFENERS, SQUASH BLOCKS, BEARING BLOCKS, BLOCKING PANELS, FILLER BLOCKS, BACKER BLOCKS AS RECOMMENDED BY MANUFACTURER. REFER TO MANUFACTURER'S GUIDELINES FOR INSTALLATION AND FASTENING.
- PRE-ENGINEERED/PRE-FABRICATED WOOD ROOF/FLOOR TRUSSES SHALL BE IN ACCORDANCE WITH "DESIGN SPECIFICATIONS FOR METAL PLATE CONNECTED WOOD TRUSSES " BY "TRUSS PLATE IINSTUTE (TPI - I)"
- PROVIDE HURRICANE CLIPS TO RESIST UPLIFT AS SHOWN ON SHOP DRAWINGS. PROVIDE SIMPSON "H2.5" HURRICANE CLIP MIN.
- REFER & FOLLOW "BCSI" GUIDES B1 THRU B11 FOR HANDLING, INSTALLING, RESTRAINING AND BRACING OF METAL PLATE CONNECTED WOOD TRUSSES.
- INSTALLATION OF PRE-ENGINEERED/PRE-FABRICATED ROOF AND/OR FLOOR TRUSSES SHALL BE DONE PER TRUSS DESIGN DRAWINGS AND TRUSS ENGINEER SHALL BE RESPONSIBLE FOR PROVIDING ANY REPAIRS OR ALTERATIONS IN TRUSS CONFIGURATIONS.

EXISTING CONDITIONS:

- ALL EXISTING STRUCTURAL MEMBERS TO REMAIN INTACT UNLESS SPECIFICALLY NOTED TO BE REMOVED BY MOST RECENT DEMOLITION DOCUMENTS BY ARCHITECT OR OTHERWISE NOTED ON THESE DRAWINGS.
- ALL INFORMATION ON THESE DRAWINGS RELATED TO EXISTING CONDITIONS ARE PROVIDED BASED ON AVAILABLE CONTRACT DRAWINGS OR INFORMATION PER ARCHITECTURAL DRAWINGS. CONTRACTOR IS RESPONSIBLE FOR FIELD VERIFYING ALL EXISTING CONDITIONS AND NOTIFY STRUCTURAL ENGINEER IF ANY DISCREPANCY IS FOUND BETWEEN CONTRACT DRAWINGS AND EXISTING CONDITIONS.
- THE PORTION OF THE STRUCTURE THAT IS SHOWN TO BE STRUCTURALLY MODIFIED HAVE BEEN DESIGNED ACCORDING TO BEST ENGINEERING PRACTICE. HOWEVER WE DO NOT ASSUME RESPONSIBILITY FOR ANY DAMAGE THAT MAY ARISE FOR ANY PORTION OF THE BUILDING NOT REDESIGNED, ALTERED OR CONSTRUCTED UNDER THIS SET OF DESIGN DRAWINGS. WE DO NOT ASSUME ANY RESPONSIBILITY OR LIABILITY TOWARDS DEFICIENCIES IN THE CONDITION OF THE BUILDING PRIOR TO RENOVATION PER NEW CONTRACT DRAWINGS.
- CONTRACTOR SHALL FIELD VERIFY ALL DIMENSIONS PRIOR TO COMMENCEMENT OF ANY WORK.

WOOD FASTENERS/CONNECTORS:

- FASTENERS USED BELOW GRADE TO ATTACH PLYWOOD TO EXTERIOR WALLS OR CRAWL SPACE STUD WALLS OR KNEE WALL CONSTRUCTION OVER FOUNDATION SHALL BE TYPE 304 OR 316 STAINLESS STEEL.
- ALL MECHANICAL WOOD CONNECTORS SHALL BE CLEARLY SPECIFIED ON SHOP DRAWINGS SUPPLIED BY MANUFACTURER AND SHALL BE DESIGNED FOR APPROPRIATE LOAD AS REQUIRED BY GOVERNING CODE/JURISDICTION.
- ALL MECHANICAL CONNECTORS AND/OR FASTENERS INCLUDING NAILS/BOLTS/SCREWS EXPOSED TO CONCRETE/MASONRY/WEATHER SHALL BE HOT DIP GALVANIZED OR STAINLESS STEEL OR APPROVED BY MANUFACTURER FOR SUCH USE.
- BOLT HOLES SHALL BE A MIN. OF 1/32" TO A MAX. OF 1/16" LARGER THAN THE BOLT DIAMETER.
- A METAL PLATE OR WASHER NOT LESS THAN A STANDARD OVERSIZED CUT WASHER SHALL BE BETWEEN THE WOOD AND THE BOLT HEAD AND BETWEEN THE WOOD AND THE NUT.
- SNUG TIGHT ALL BOLTS. TIGHTEN CONNECTIONS WHICH HAVE LOOSENED DUE TO WOOD SHRINKAGE.
- INSTALL BOLTS TO EXCLUDE THREADED PORTIONS OF BOLTS FROM SHEAR PLANES.
- LAG SCREWS SHALL BE INSTALLED IN PRE-DILLED HOLES.
- THE CLEARANCE HOLE FOR THE SHANK SHALL HAVE THE SAME DIAMETER AS THE SHANK AND THE SAME DEPTH OF PENETRATION AS THE LENGTH OF THE SHANK.
- THE LEAD HOLE FOR THE THREADED PORTION SHALL HAVE A DIAMETER EQUAL TO 75% FOR SOUTHERN PINE, 70% FOR OTHER SPECIES OF THE SHANK DIAMETER AND A MIN. LENGTH EQUAL TO LENGTH OF THREADED PORTION.
- WOOD SILL PLATE SHALL BE ANCHORED TO CONCRETE/MASONRY W/ 1/2" DIA. ANCHOR BOLTS WITH MIN. 7" EMBEDMENT AND 6'-0" O.C. AND 12" MAX. FROM PLATE ENDS OR SPLICES. REFER TO MANUFACTURER'S RECOMMENDATIONS FOR ALTERNATE ANCHORS. REFER TO SHEAR WALL SCHEDULE FOR ADDITIONAL ANCHORAGE REQUIREMENTS. PROVIDE MIN. 3"x3" WASHERS TO ANCHOR BOLTS WITH ENGINEERED SHEAR WALLS (SW) ARE SPECIFIED ON DRAWINGS.
- REFER TO FASTENING SCHEDULE FOR MORE INFORMATION.

NOTES ON FASTENER SCHEDULE (IRC 2015 - TABLE R602.3(1)):

a. ALL NAILS ARE SMOOTH-COMMON, BOX OR DEFORMED SHANKS EXCEPT WHERE OTHERWISE STATED. NAILS USED FOR FRAMING AND SHEATHING CONNECTIONS SHALL HAVE MIN. AVERAGE BENDING YIELD STRENGTHS AS SHOWN 80 ksi FOR SHANK DIAMETER OF 0.192 INCHES, 90 ksi FOR SHANK DIAMETERS LARGER THAN 0.142 INCHES BUT NOT LARGER THAN 0.177 INCHES AND 100 ksi FOR SHANK DIAMETERS OF 0.142 INCHES OR LESS
b. STAPLES ARE 16 GAGE WIRE AND HAVE A MINIMUM 7/16 INCH ON DIAMETER CROWN WIDTH
c. NAILS SHALL BE SPACED AT NOT MORE THAN 6" O.C. AT ALL SUPPORTS WHERE SPANS ARE 48" OR GREATER
d. 4'-0" x 8'-0" OR 4'-0" x 9'-0" PANELS SHALL BE APPLIED VERTICALLY.
e. SPACING OF FASTENERS NOT INCLUDED IN THIS TABLE SHALL BE BASED ON TABLE R602.3(2) OF IRC 2015.
f. FOR REGIONS HAVING BASIC WIND SPEED OF 110 MPH OR GREATER 8d DEFORMED (2 1/2" x 0.120) NAILS SHALL BE USED FOR ATTACHING PLYWOOD AND WOOD STRUCTURAL PANEL ROOF SHEATHING TO FRAMING WITHIN MIN. 48" DISTANCE FROM GABLE END WALLS, IF MEAN ROOF HEIGHT IS MORE THAN 25'-0" UP TO 35'-0" MAXIMUM.
g. FOR REGIONS HAVING BASIC WIND SPEED OF 100 MPH OR LESS, NAILS FOR ATTACHING WOOD STRUCTURAL PANEL ROOF SHEATHING TO GABLE END WALL FRAMING SHALL BE SPACED 6" O.C. WHEN BASIC WIND SPEED IS GREATER THAN 100 MPH, NAILS FOR ATTACHING PANEL ROOF SHEATHING TO INTERMEDIATE SUPPORTS SHALL BE SPACED 6" O.C. FOR MIN. 48" DISTANCE FROM RIDGES, EAVES AND GABLE END WALLS; AND 4" O.C. TO GABLE END WALL FRAMING.
h. GYPSUM SHEATHING SHALL CONFORM TO ASTM C 1396 AND SHALL BE INSTALLED IN ACCORDANCE WITH GA 253. FIBERBOARD SHEATHING SHALL CONFORM TO ASTM C 208.
i. SPACING OF FASTENERS ON FLOOR SHEATHING PANEL EDGES APPLIES TO PANEL EDGES SUPPORTED BY FRAMING MEMBERS AND REQUIRED BLOCKING AND AT ALL FLOOR PERIMETERS ONLY. SPACING OF FASTENERS ON ROOF SHEATHING PANEL EDGES APPLIES TO PANEL EDGES SUPPORTED BY FRAMING MEMBERS AND REQUIRED BLOCKING. BLOCKING OF ROOF OR FLOOR SHEATHING PANEL EDGES PERPENDICULAR TO THE FRAMING MEMBERS NEED NOT BE PROVIDED EXCEPT AS REQUIRED BY OTHER PROVISIONS OF THE CODE. FLOOR PERIMETER SHALL BE SUPPORTED BY FRAMING MEMBERS OR SOLID BLOCKING.

ABBREVIATIONS:

ARCH= ARCHITECTURAL
B.E.W= BOTTOM EACH WAY
BM= BEAM
BRG= BEARING
COL= COLUMN
CONC.= CONCRETE
CONT= CONTINUOUS
DBL= DOUBLE
EA= EACH
E.E.= EACH END
EXP= EXPANSION
EXT.= EXTERIOR
FDN= FOUNDATION
FTG= FOOTING
G.T.= GIRDER TRUSS
HDR= HEADER
INT.= INTERIOR
INFO INFORMATION
J= JACK STUD
MANUF= MANUFACTURER
MIN= MINIMUM
MAX= MAXIMUM
ML= MICROLAM
N.T.S= NOT TO SCALE
O.C.= ON CENTER
PLYWD= PLYWOOD
P.T.= PRESSURE TREATED
P.A. = POST FROM ABOVE
REQD= REQUIRED
S= KING STUD
SPF= SPRUCE PINE FIR
SP= SOUTHERN PINE
STL= STEEL
TYP= TYPICAL
W/= WITH
WD= WOOD
WWF= WELDED WIRE FABRIC
U.N.O.= UNLESS NOTED OTHERWISE

NO.	DESCRIPTION OF BUILDING ELEMENT	FASTNERS
1	BLOCKING BETWEEN JOISTS OR RAFTERS TO TOP PLATE (TOE NAIL)	(3) 8d (2 1/2" x 0.113")
2	CEILING JOISTS TO PLATE (TOE NAIL)	(3) 8d (2 1/2" x 0.113")
3	CEILING JOISTS NOT ATTACHED TO PARALLEL RAFTER, LAPS OVER PARTIAIONS (FACE NAIL)	(3) 10d
4	COLLAR TIE RAFTER (FACE NAIL) OR 1 1/4" x 20 GAGE RIDGE STRAP	(3) 10d (3" x 0.128")
5	RAFTER TO PLATE (TOE NAIL)	(2) 16d (3 1/2" x 0.135")
6	ROOF RAFTERS TO RIDGE, VALLEY OR HIP RAFTERS TOE NAILS FACE NAILS	 (4) 16d (3 1/2" x 0.135") (3) 16d (3 1/2" x 0.135")
7	BUILT-UP CORNER STUDS	10d (3" x 0.128") @ 24" O.C.
8	BUILT-UP HEADER, TWO PIECES W/ 1/2" SPACER	16d (3 1/2" x 0.135") @ 16" O.C. ALONG EACH EDGE
9	CONTINUED HEADER, TWO PIECES	16d (3 1/2" x 0.135") @ 16" O.C. ALONG EACH EDGE
10	CONTINUOUS HEADER TO STUD (TOE NAIL)	(4) 8d (2 1/2" x 0.113")
11	DOUBLE STUDS (FACE NAILS)	10d (3" x 0.128") @ 24" O.C.
12	DOUBLE TOP PLATES (FACE NAILS)	10d (3" x 0.128") @ 24" O.C.
13	DOUBLE TOP PLATES, MIN. 48" OFFSET OF END JOINSTS (FACE NAILS IN LAPPED AREA)	(8) 16d (3 1/2" x 0.135")
14	SOLE PLATE TO JOIST OR BLOCKING (FACE NAIL)	16d (3 1/2" x 0.135") @ 16" O.C.
15	SOLE PLATE TO JOIST OR BLOCKING (FACE NAIL) AT BRACED WALL PANELS	(3) 16d (3 1/2" x 0.135") @ 16" O.C.

NO.	DESCRIPTION OF BUILDING ELEMENT	FASTNERS
16	STUD TO SOLE PLATE (TOE NAIL)	(3) 8d (2 1/2" x 0.113") OR (2) 16d (3 1/2" x 0.135")
17	TOP OR SOLE PLATE TO STUD (END NAIL)	(2) 16d (3 1/2" x 0.135")
18	TOP PLATES, LAPS AT CORNERS AND INTERSECTIONS (FACE NAIL)	(2) 10d (3" x 0.128")
19	1" BRACE TO EACH STUD AND PLATE (FACE NAIL)	(2) 8d (2 1/2" x 0.113") OR (2) STAPLES 1 3/4"
20	1" x 6" SHEATHING TO EACH BEARING (FACE NAIL)	(2) 8d (2 1/2" x 0.113") OR (2) STAPLES 1 3/4"
21	1" x 8" SHEATHING TO EACH BEARING (FACE NAIL)	(2) 8d (2 1/2" x 0.113") OR (3) STAPLES 1 3/4"
22	WIDER THAN 1" x 8" SHEATHING TO EACH BEARING (FACE NAIL)	(3) 8d (2 1/2" x 0.113") OR (4) STAPLES 1 3/4"
23	JOIST TO SILL OR GIRDER (TOE NAIL)	(3) 8d (2 1/2" x 0.113")
24	1" x 6" SUBFLOOR OR LESS TO EACH JOIST (FACE NAIL)	(2) 8d (2 1/2" x 0.113") OR (2) STAPLES 1 3/4"
25	2" SUBFLOOR TO JOIST OR GIRDER (BLIND AND FACE NAIL)	(2) 16d (3 1/2" x 0.135")
26	RIM JOIST TO TOP PLATE (TOE NAIL) ROOF APPLICATOIN ALSO	8d (2 1/2" x 0.113") @ 6" O.C.
27	2" PLANKS (PLANK & BEAM - FLOOR & ROOF)	(2) 16d (3 1/2" x 0.135") @ E.E.
28	BUILT-UP GIRDERS & BEAMS, 2" LUMBER LAYERS	10d (3" x 0.128") NAIL EA. LAYER 32" O.C. AT TOP AND BOTT. STAGGERED. TWO NAILS AT ENDS AND AT EA. SPLICE.
29	LEDGER STRIP SUPPORTING JOISTS OR RAFTERS	(3) 16d (3 1/2" x 0.135") AT EACH JOIST OR RAFTER

NO.	BUILDING MATERIALS	DESCRIPTION OF FASTENERS	NAILING PATTERN	
			EDGES	INTERMEDIATE SUPPORTS
WOOD STRUCTURAL PANELS, SUBFLOOR, ROOF AND INTERIOR WALL SHEATHING TO FRAMING & PARTICLE BOARD WALL SHEATHING TO FRAMING				
30	3/8" - 1/2"	6d (2" x 0.113") COMMON NAIL (SUBFLOOR, WALL) (j) 8d (2 1/2" x 0.131") COMMON NAIL (ROOF)	6"	12" (g)
31	5/16" - 1/2"	6d (2" x 0.113") COMMON NAIL (SUBFLOOR, WALL) 8d (2 1/2" x 0.131") COMMON NAIL (ROOF) (f)	6"	12" (g)
32	19/32" - 1"	8d (2 1/2" x 0.131") COMMON NAIL	6"	12" (g)
33	1 1/8" - 1 1/4"	10d (3" x 0.148") COMMON NAIL OR 8d (2 1/2" x 0.131") DEFORMED NAIL	6"	12"
OTHER WALL SHEATHING (h)				
34	1/2" STRUCTURAL CELLULOSIC FIBERBOARD SHEATHING	1/2" GALVANIZED ROOFING NAIL, 7/16' CROWN OR 16 GA. STAPLE, 1" CROWN & 1 1/4" LONG	3"	6"
35	25/32" STRUCTURAL CELLULOSIC FIBERBOARD SHEATHING	1 3/4" GALVANIZED ROOFING NAIL, 7/16' CROWN OR 16 GA. STAPLE, 1" CROWN & 1 1/2" LONG	3"	6"
36	1/2" GYPSUM SHEATHING (d)	1 1/2" GALVANIZED ROOFING NAIL OR 1 1/2" LONG GALVANIZED STAPLES, OR 1 1/4" SCREWS TYPE W OR S.	7"	7"
37	1/2" GYPSUM SHEATHING (d)	1 3/4" GALVANIZED ROOFING NAIL OR 1 5/8" LONG GALVANIZED STAPLES, OR 1 5/8" SCREWS TYPE W OR S.	7"	7"
WOOD STRUCTURAL PANELS, COMBINATION OF SUBFLOOR UNDERLAYMENT TO FRAMING				
38	3/4" AND LESS	6d (2" x 0.120") DEFORMED NAIL OR 8d (2 1/2" x 0.131") COMMON NAIL	6"	12"
39	7/8" - 1"	8d (2 1/2" x 0.131") COMMON NAIL OR 8d (2 1/2" x 0.120") DEFORMED NAIL	6"	12"
40	1 1/8" - 1 1/4"	10d (3" x 0.148") COMMON NAIL OR 8d (2 1/2" x 0.120") DEFORMED NAIL	6"	12"

© COPYRIGHT 2016
Structural Engineering content of this drawings are property of structBIM LLC and are issued for this project only. Any re-use or re-production of these drawings shall not be done without written consent of structBIM LLC. These drawings are to be read in conjuction with project specifications and drawings from other consultants. These drawings shall not be used as shop drawings. Do not scale drawings, use dimensions as specified.

GTMARCHITECTS

7735 OLD GEORGETOWN ROAD
SUITE 700
BETHESDA, MD 20814
(240)333-2000
(240)333-2001 FAX
WWW.GTMARCHITECTS.COM

GTM

Seal

Consultant

structBIM ENGINEERS
WE DESIGN....WE BIM
46400 BENEDICT DR, SUITE #211
PHONE: 703-657-4481
E-MAIL: info@structBIM.com

Project

19 HIGH STREET LOT 4
BROOKVILLE, MD

LOT 4

I certify that these documents were prepared or approved by me, and that I am a duly licensed Professional Engineer under the laws of the State of Maryland, license number 40082, Expiration Date: 02-13-2023.

N

Issue Description | *Date*

structBIM Project No. 22-0165
Checked By KK
Drawn By KK
Scale 1/4" = 1'-0"

Sheet Title
GENERAL NOTES

Sheet No.
SG

COPYRIGHT, 2016 structBIMEngineers, LLC.
PLOTTED ON: 4/15/2022 12:52:13 PM

FILE NAME:

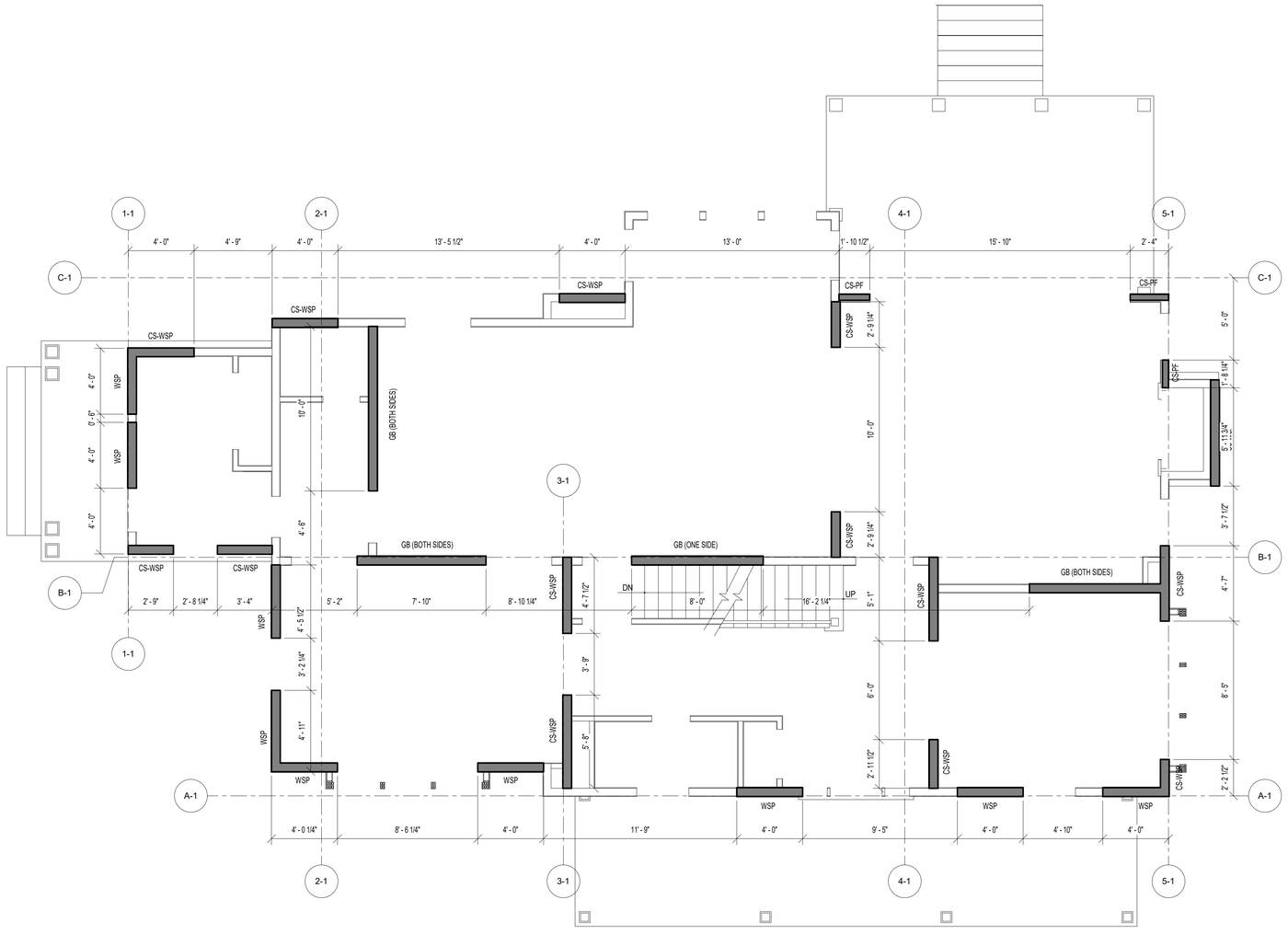

1 SWB1 FIRST FLOOR WALL BRACING PLAN
SCALE: 1/4" = 1'-0"

PLAN LEGENDS & SYMBOLS:

- INDICATES BEARING WALL
- INDICATES DRAIN HOLE FROM ABOVE
- INDICATES JOIST/TRUSS HANEGR (REFER TO SHOP DWGS)
- INDICATES FRAMING DIRECTION
- INDICATES REBAR DIRECTION
- (__J+__S)
  - INDICATES NO. OF KING STUDS AT EACH END
  - INDICATES NO. OF JACK STUDS AT EACH END
- WF?? — INDICATES WALL FOOTING; WIDTH OF WALL FOOTING IN INCHES
- TS?? — INDICATES THICKENED SLAB; WIDTH OF THICKENED SLAB IN INCHES
- F.x.x — INDICATES ISOLATED COLUMN FOOTING; INDICATES SIZE OF FOOTING IN DECIMAL FEET
- ML?? — MICROLAM LVL 2.0E; DEPTH OF MICROLAM LVL IN INCHES
- LSL?? — LAMINATED STRAND LUMBER 1.7E; DEPTH OF TIMBERSTAND LSL BEAM IN INCHES
- PSL?? — PARALLAM STRAND LUMBER 2.0E; WIDTHxDEPTH OF MEMBER
- CC — COLUMN CAP
- CB — COLUMN BASE
- HD — HOLD DOWN ANCHOR
- MS — METAL STRAP
- H — JOIST/TRUSS/BEAM HANGER
- HC — HURRICANE CLIPS

WALL BRACING/SHEAR WALL SCHEDULE

MARK	DESCRIPTION	FASTENING PATTERN
CS-PF	7/16" APA RATED OSB SHEATHING	8d COMMON NAILS (2 1/2" x 0.131") @ 6" O.C. ON EDGES & 12" O.C. IN-FIELD
CS-WSP	7/16" APA RATED OSB SHEATHING	8d COMMON NAILS (2 1/2" x 0.131") @ 6" O.C. ON EDGES & 12" O.C. IN-FIELD
GB (BOTH SIDES)	1/2" GYPSUM WALL BOARD SHEATHING	1 1/2 " GALVANIZED ROOFING NAILS OR 1 1/2" GALVANIZED STAPLES OR 1 1/4" SCREWS TYPE W OR S @ 7" O.C. ON EDGES & IN-FIELD
GB (ONE SIDE)	1/2" GYPSUM WALL BOARD SHEATHING	1 1/2 " GALVANIZED ROOFING NAILS OR 1 1/2" GALVANIZED STAPLES OR 1 1/4" SCREWS TYPE W OR S @ 7" O.C. ON EDGES & IN-FIELD
WSP	7/16" APA RATED OSB SHEATHING	8d COMMON NAILS (2 1/2" x 0.131") @ 6" O.C. ON EDGES & 12" O.C. IN-FIELD

Ultimate Wind Speed (mph)		115																
BWL Designation		A-1		B-1		C-1		1-1		2-1		3-1		4-1		5-1		
No. of Floors above BWL		1		1		1		0		1		1		1		1		
BWP Method		WSP		GB		CS-WSP		WSP		GB		CS-WSP		CS-WSP		CS-WSP		
Average BWL Spacing (ft)		14.5		16.5		17		8.75		23		20.21		22.23		16		
Tabular Requirement (ft)		5.58		10.58		5.60		2.00		14.15		6.55		7.06		5.30		
Adjustments	Exposure	B	1.00	B	1.00	B	1.00	B	1.00	B	1.00	B	1.00	B	1.00	B	1.00	
	Eave-to-Ridge Ht. (ft)	15.00	1.15	15.00	1.15	15.00	1.15	15.00	1.30	15.00	1.15	15.00	1.15	15.00	1.15	15.00	1.15	
	Max. Wall Ht. (ft)	10.00	1.00	10.00	1.00	10.00	1.00	10.00	1.00	10.00	1.00	10.00	1.00	10.00	1.00	10.00	1.00	
	No. of BWLs	2	1.00	2	1.00	3	1.30	≥5	1.60	≥5	1.60	≥5	1.60	≥5	1.60	≥5	1.60	
	Omit Interior Finish?	No	1.00	No	1.00	No	1.00	No	1.00	No	1.00	No	1.00	No	1.00	No	1.00	
	Added Hold-downs?	No	1.00	No	1.00	No	1.00	No	1.00	No	1.00	No	1.00	No	1.00	No	1.00	
	Joints Blocked?	Yes	1.00	Yes	1.00	Yes	1.00	Yes	1.00	Yes	1.00	Yes	1.00	Yes	1.00	Yes	1.00	
	Fasteners @ 4" o.c.?	No	1.00	No	1.00	No	1.00	No	1.00	Yes	0.70	Yes	0.83	Yes	0.83	No	1.00	
Required BWP Length (ft)		6.41		12.16		8.37		4.16		18.23		10.01		10.78		9.75		
Actual BWPs	BWP	Method	Length	Method	Length	Method	Length	Method	Length	Method	Length	Method	Length	Method	Length	Method	Length	
	Contributing Length (ft) 1	WSP	4.00	CS-WSP	2.75	CS-WSP	4.00	WSP	4.00	WSP	5.00	CS-WSP	5.75	CS-WSP	3.00	CS-WSP	2.16	
	2	WSP	4.00	CS-WSP	3.33	CS-WSP	4.00	WSP	4.00	WSP	4.50	CS-WSP	4.66	CS-WSP	5.00	CS-WSP	4.58	
	3	WSP	4.00	GB (dis)	7.81	CS-WSP	4.00			GB (dis)	10.00			CS-WSP	2.75	CS-PF	2.49	
	4	WSP	4.00	GB (ss)	4.00	CS-PF	1.81							CS-WSP	2.75	CS-PF	2.49	
	5	WSP	4.00	GB (dis)	8.00	CS-PF	2.33											
	6																	
	7																	
Actual BWP Length (ft)		20.00		25.89		16.14		8.00		19.50		10.41		13.50		11.72		
Actual ≥ Required?		PASS		PASS		PASS		PASS		PASS		PASS		PASS		PASS		
BWPs ≤ 20' Apart?		Yes		Yes		Yes		Yes		Yes		Yes		Yes		Yes		
≥ 2 Panels in BWL?		Yes		Yes		Yes		Yes		Yes		Yes		Yes		Yes		
BWP 10' from Ends?		Yes		Yes		Yes		Yes		Yes		Yes		Yes		Yes		
Continuous Sheathing		End 1	End 2	End 1	End 2	End 1	End 2	End 1	End 2	End 1	End 2	End 1	End 2	End 1	End 2	End 1	End 2	
End Conditions		1	1	1	1	1	1	1	1	1	1	1	1	1	1	1	1	
BWL Compliance		PASS		PASS		PASS		PASS		PASS		PASS		PASS		PASS		

© COPYRIGHT 2016
Structural Engineering content of this drawings are property of structBIM LLC and are issued for this project only. Any re-use or re-production of these drawings shall not be done without written consent of structBIM LLC. These drawings are to be read in conjuction with project specifications and drawings from other consultants. These drawings shall not be used as shop drawings. Do not scale drawings, use dimensions as specified.

GTM ARCHITECTS

7735 OLD GEORGETOWN ROAD
SUITE 700
BETHESDA, MD 20814
(240)333-2000
(240)333-2001 FAX
WWW.GTMARCHITECTS.COM

GTM

Seal

STATE OF MARYLAND — MICHAEL KANE — 40082 — PROFESSIONAL ENGINEER

Consultant

structBIM ENGINEERS
WE DESIGN....WE BIM
46400 BENEDICT DR, SUITE #211
PHONE: 703-657-4481
E-MAIL: info@structBIM.com

Project

19 HIGH STREET LOT 4
BROOKVILLE, MD

LOT 4

I certify that these documents were prepared or approved by me, and that I am a duly licensed Professional Engineer under the laws of the State of Maryland, license number 40082, Expiration Date: 02-13-2023.

Issue Description	*Date*

structBIM Project No.	22-0165
Checked By	KK
Drawn By	KK
Scale	1/4" = 1'-0"

Sheet Title
FIRST FLOOR WALL BRACING PLAN

Sheet No.

SWB1

COPYRIGHT, 2016 structBIMEngineers, LLC.
PLOTTED ON: 4/15/2022 12:52:15 PM

FILE NAME:

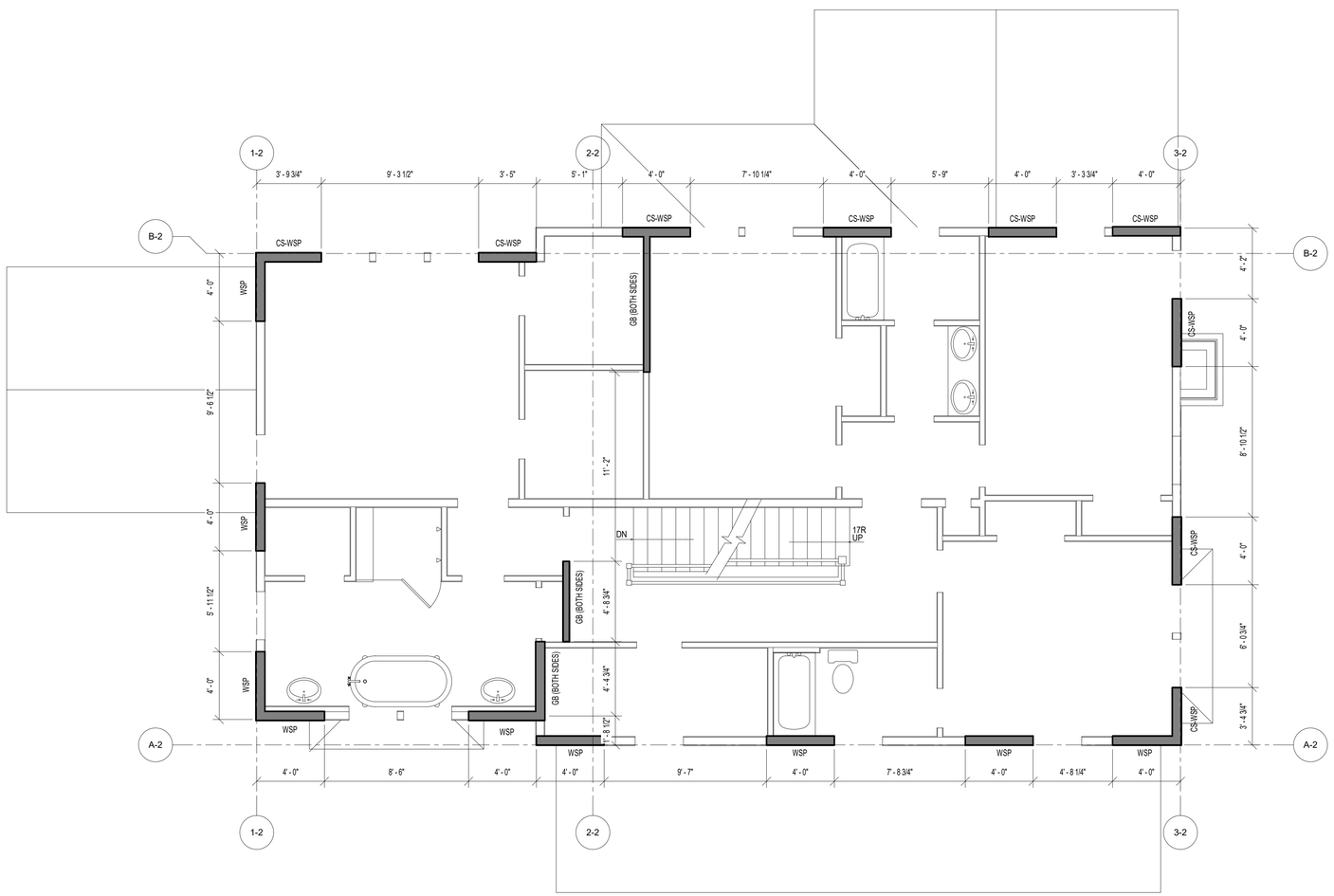

1 SWB2 SECOND FLOOR WALL BRACING PLAN

SCALE: 1/4" = 1'-0"

PLAN LEGENDS & SYMBOLS:

- INDICATES BEARING WALL
- INDICATES DRAIN HOLE FROM ABOVE
- INDICATES JOIST/TRUSS HANEGR (REFER TO SHOP DWGS)
- INDICATES FRAMING DIRECTION
- INDICATES REBAR DIRECTION
- (_J#_S) — INDICATES NO. OF KING STUDS AT EACH END; INDICATES NO. OF JACK STUDS AT EACH END
- WF?? — INDICATES WALL FOOTING; WIDTH OF WALL FOOTING IN INCHES
- TS?? — INDICATES THICKENED SLAB; WIDTH OF THICKENED SLAB IN INCHES
- F.x.x — INDICATES ISOLATED COLUMN FOOTING; INDICATES SIZE OF FOOTING IN DECIMAL FEET
- ML?? — MICROLAM LVL 2.0E; DEPTH OF MICROLAM LVL IN INCHES
- LSL?? — LAMINATED STRAND LUMBER 1.7E; DEPTH OF TIMBERSTAND LSL BEAM IN INCHES
- PSL?? — PARALLAM STRAND LUMBER 2.0E; WIDTHxDEPTH OF MEMBER
- CC — COLUMN CAP
- CB — COLUMN BASE
- HD — HOLD DOWN ANCHOR
- MS — METAL STRAP
- H — JOIST/TRUSS/BEAM HANGER
- HC — HURRICANE CLIPS

WALL BRACING/SHEAR WALL SCHEDULE

MARK	DESCRIPTION	FASTENING PATTERN
CS-PF	7/16" APA RATED OSB SHEATHING	8d COMMON NAILS (2 1/2" x 0.131") @ 6" O.C. ON EDGES & 12" O.C. IN-FIELD
CS-WSP	7/16" APA RATED OSB SHEATHING	8d COMMON NAILS (2 1/2" x 0.131") @ 6" O.C. ON EDGES & 12" O.C. IN-FIELD
GB (BOTH SIDES)	1/2" GYPSUM WALL BOARD SHEATHING	1 1/2 " GALVANIZED ROOFING NAILS OR 1 1/2" GALVANIZED STAPLES OR 1 1/4" SCREWS TYPE W OR S @ 7" O.C. ON EDGES & IN-FIELD
GB (ONE SIDE)	1/2" GYPSUM WALL BOARD SHEATHING	1 1/2 " GALVANIZED ROOFING NAILS OR 1 1/2" GALVANIZED STAPLES OR 1 1/4" SCREWS TYPE W OR S @ 7" O.C. ON EDGES & IN-FIELD
WSP	7/16" APA RATED OSB SHEATHING	8d COMMON NAILS (2 1/2" x 0.131") @ 6" O.C. ON EDGES & 12" O.C. IN-FIELD

Ultimate Wind Speed (mph)		115										
BWL Designation		A-2		B-2		1-2		2-2		3-2		
No. of Floors above BWL		0		0		0		0		0		
BWP Method		WSP		CS-WSP		WSP		GB		CS-WSP		
Average BWL Spacing (ft)		29		29		19.81		27.25		17.33		
Tabular Requirement (ft)		5.30		4.40		3.47		8.68		3.10		
Adjustments	Exposure	B	1.00	B	1.00	B	1.00	B	1.00	B	1.00	
	Eave-to-Ridge Ht. (ft)	15.00	1.30	15.00	1.30	15.00	1.30	15.00	1.30	15.00	1.30	
	Max. Wall Ht. (ft)	9.00	0.95	9.00	0.95	9.00	0.95	9.00	0.95	9.00	0.95	
	No. of BWLs	2	1.00	2	1.00	3	1.30	3	1.30	3	1.30	
	Omit Interior Finish?	No	1.00	No	1.00	No	1.00	No	1.00	No	1.00	
	Added Hold-downs?	No	1.00	No	1.00	No	1.00	No	1.00	No	1.00	
	Joints Blocked?	Yes	1.00	Yes	1.00	Yes	1.00	Yes	1.00	Yes	1.00	
	Fasteners @ 4" o.c.?	No	1.00	No	1.00	No	1.00	No	1.00	No	1.00	
Required BWP Length (ft)		6.55		5.43		5.57		13.93		4.98		
Actual BWPs	BWP	Method	Length	Method	Length	Method	Length	Method	Length	Method	Length	
	Contributing Length (ft) WSP=factor/ SFB=factor/ GB(sp)=0.5factor/ GB(ds)=factor/ CS-PF=1.5factor/ PF(s)=1.5factor/ PF(ns)/ ABW=4/	1	WSP	4.00	CS-WSP	3.75	WSP	4.00	GB (ds)	4.33	CS-WSP	3.33
		2	WSP	4.00	CS-WSP	3.50	WSP	4.00	GB (ss)	4.75	CS-WSP	4.00
		3	WSP	4.00	CS-WSP	4.00	WSP	4.00	GB (ds)	8.00	CS-WSP	4.00
		4	WSP	4.00	CS-WSP	4.00						
		5	WSP	4.00	CS-WSP	4.00						
		6	WSP	4.00	CS-WSP	4.00						
		7										
Actual BWP Length (ft)		24.00		23.25		12.00		17.08		11.33		
Actual ≥ Required?		PASS		PASS		PASS		PASS		PASS		
BWPs ≤ 20' Apart?		Yes		Yes		Yes		Yes		Yes		
≥ 2 Panels in BWL?		Yes		Yes		Yes		Yes		Yes		
BWP 10' from Ends?		Yes		Yes		Yes		Yes		Yes		
Continuous Sheathing		End 1	End 2	End 1	End 2	End 1	End 2	End 1	End 2	End 1	End 2	
End Conditions		1	1	1	1	1	1	1	1	1	1	
BWL Compliance		PASS		PASS		PASS		PASS		PASS		

© COPYRIGHT 2016
Structural Engineering content of this drawings are property of structBIM LLC and are issued for this project only. Any re-use or re-production of these drawings shall not be done without written consent of structBIM LLC. These drawings are to be read in conjuction with project specifications and drawings from other consultants. These drawings shall not be used as shop drawings. Do not scale drawings, use dimensions as specified.

GTM ARCHITECTS

7735 OLD GEORGETOWN ROAD
SUITE 700
BETHESDA, MD 20814
(240)333-2000
(240)333-2001 FAX
WWW.GTMARCHITECTS.COM

GTM

Seal

STATE OF MARYLAND — KAMAL KANDAL — 40082 — PROFESSIONAL ENGINEER

Consultant

structBIM ENGINEERS
WE DESIGN....WE BIM
46400 BENEDICT DR, SUITE #211
PHONE: 703-657-4481
E-MAIL: info@structBIM.com

Project

19 HIGH STREET LOT 4
BROOKVILLE, MD

LOT 4

I certify that these documents were prepared or approved by me, and that I am a duly licensed Professional Engineer under the laws of the State of Maryland, license number 40082, Expiration Date: 02-13-2023.

Issue Description	*Date*

structBIM Project No.	22-0165
Checked By	KK
Drawn By	KK
Scale	1/4" = 1'-0"

Sheet Title
SECOND FLOOR WALL BRACING PLAN

Sheet No.

SWB2

COPYRIGHT, 2016 structBIMEngineers, LLC.

PLOTTED ON: 4/15/2022 12:52:16 PM

FILE NAME:

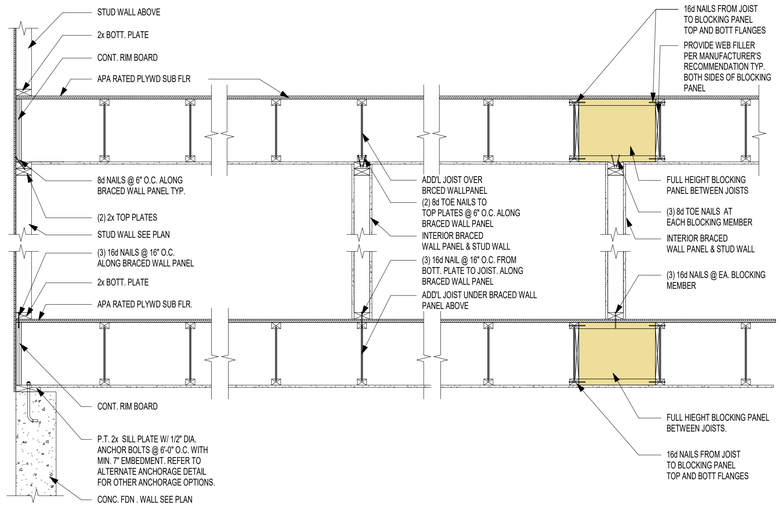

3 SWB3 BRACED WALL PANEL PARALLEL TO I-JOISTS
SCALE: 3/4" = 1'-0"

WALL BRACING/SHEAR WALL SCHEDULE

MARK	DESCRIPTION	FASTENING PATTERN
CS-PF	7/16" APA RATED OSB SHEATHING	8d COMMON NAILS (2 1/2" x 0.131") @ 6" O.C. ON EDGES & 12" O.C. IN-FIELD
CS-WSP	7/16" APA RATED OSB SHEATHING	8d COMMON NAILS (2 1/2" x 0.131") @ 6" O.C. ON EDGES & 12" O.C. IN-FIELD
GB (BOTH SIDES)	1/2" GYPSUM WALL BOARD SHEATHING	1 1/2 " GALVANIZED ROOFING NAILS OR 1 1/2" GALVANIZED STAPLES OR 1 1/4" SCREWS TYPE W OR S @ 7" O.C. ON EDGES & IN-FIELD
GB (ONE SIDE)	1/2" GYPSUM WALL BOARD SHEATHING	1 1/2 " GALVANIZED ROOFING NAILS OR 1 1/2" GALVANIZED STAPLES OR 1 1/4" SCREWS TYPE W OR S @ 7" O.C. ON EDGES & IN-FIELD
WSP	7/16" APA RATED OSB SHEATHING	8d COMMON NAILS (2 1/2" x 0.131") @ 6" O.C. ON EDGES & 12" O.C. IN-FIELD

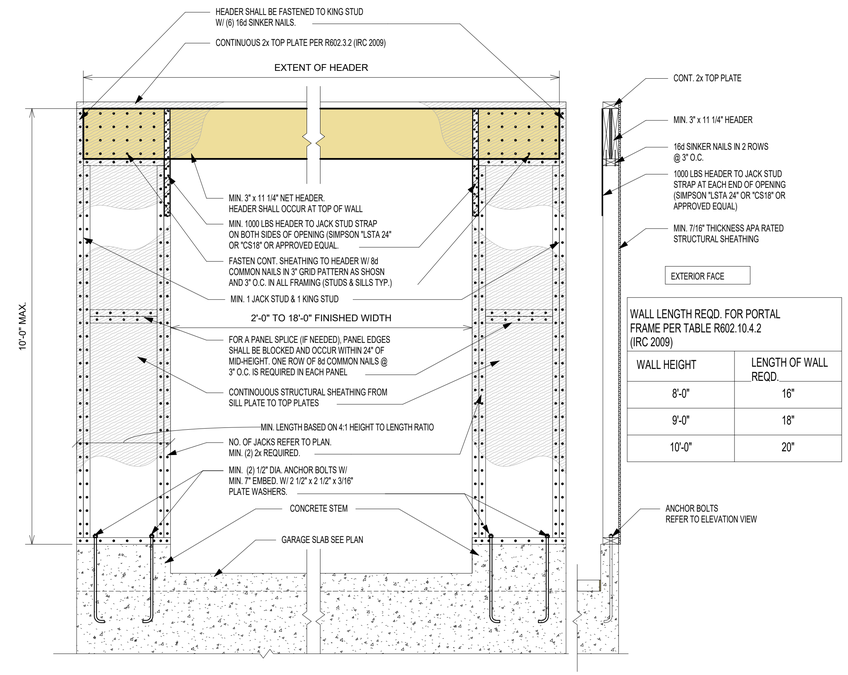

WALL LENGTH REQD. FOR PORTAL FRAME PER TABLE R602.10.4.2 (IRC 2009)

WALL HEIGHT	LENGTH OF WALL REQD.
8'-0"	16"
9'-0"	18"
10'-0"	20"

ELEVATION VIEW **SECTION VIEW**

1 SWB3 PORTAL FRAME @ GARAGE (PFG) LEFT SIDE ONLY
SCALE: 3/4" = 1'-0"

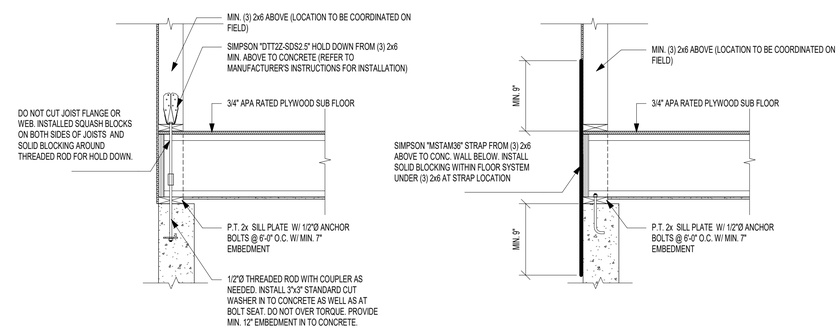

HOLD DOWN OPTION WITH SIMPSON "DTT2Z" **HOLD DOWN OPTION WITH SIMPSON "MSTAM36"**

2 SWB3 TYP. HOLD DOWN DETAILS (APPLY AT CORNERS < 24")
SCALE: 3/4" = 1'-0"

© COPYRIGHT 2016
Structural Engineering content of this drawings are property of structBIM LLC and are issued for this project only. Any re-use or re-production of these drawings shall not be done without written consent of structBIM LLC. These drawings are to be read in conjuction with project specifications and drawings from other consultants. These drawings shall not be used as shop drawings. Do not scale drawings, use dimensions as specified.

GTM ARCHITECTS
7735 OLD GEORGETOWN ROAD
SUITE 700
BETHESDA, MD 20814
(240)333-2000
(240)333-2001 FAX
WWW.GTMARCHITECTS.COM
GTM

Seal

STATE OF MARYLAND · KEVIN KANE · 40082 · PROFESSIONAL ENGINEER

Consultant

structBIM ENGINEERS
WE DESIGN....WE BIM
46400 BENEDICT DR, SUITE #211
PHONE: 703-657-4481
E-MAIL: info@structBIM.com

Project

19 HIGH STREET LOT 4
BROOKVILLE, MD

LOT 4

I certify that these documents were prepared or approved by me, and that I am a duly licensed Professional Engineer under the laws of the State of Maryland, license number 40082, Expiration Date: 02-13-2023.

Issue Description	Date

structBIM Project No.	22-0165
Checked By	KK
Drawn By	KK
Scale	3/4" = 1'-0"

Sheet Title
WALL BRACING DETAILS & SCHEDULE

Sheet No.

SWB3

COPYRIGHT, 2016 structBIMEngineers, LLC.
PLOTTED ON: 4/15/2022 12:52:22 PM

FILE NAME:

19 HIGH STREET, LOT 4
BROOKEVILLE, MD 20833

PLAT DATA

LOT 4
ADDITION TO BROOK GROVE
OLNEY 8TH ELECTION DISTRICT
MONTGOMERY COUNTY, MD

TOWN OF BROOKEVILLE
ZONED: HISTORIC VILLAGE RESIDENTIAL

FRONT SETBACK= 15'
SIDE SETBACKS= 8'
REAR SETBACK= 40'

133,830.62 SF (3.072 ACRES)

BUILDING TO BE FULLY SPRINKLERED IN ACCORDANCE WITH 2018 IRC & NFPA13D

GRAPHIC SYMBOLS

- A / A-5 — SECTION SHEET NO.
- A / A-5 — SECTIONAL DETAIL SHEET NO.
- A / A-5 — DETAIL TARGET, ENLARGEMENT SHEET NO.
- N / A-12 — EXTERIOR ELEVATION SHEET NO.
- N / W / 2 / A-12 / E / S — INTERIOR ELEVATION SYMBOL DRAWING NO. SHEET NO.
- ELEV. 42.00 — DATUM ELEVATION
- 106 — ROOM NUMBER
- 4 — DOOR NUMBER
- W1 — WINDOW TYPE
- SF1 / A-6 — STOREFRONT ELEVATION
- 1 — REVISION NUMBER
- P1 — PARTITION TYPES SEE SCHEDULE
- T — TEMPERED GLASS

LIST OF DRAWINGS

001	COVER SHEET
002	SPECIFICATIONS
003	DOOR & WINDOW SCHEDULES
EC001	THERMAL ENVELOPE DIAGRAMS
EC002	THERMAL ENVELOPE DIAGRAMS
EC003	RESCHECK REPORT
SITE	BUILDING SITE PLAN
A100	BASEMENT PLAN
A101	FIRST FLOOR PLAN
A102	SECOND FLOOR PLAN
A103	ATTIC PLAN
A104	ROOF PLAN
A200	FRONT ELEVATION
A201	RIGHT SIDE ELEVATION
A202	REAR ELEVATION
A203	LEFT SIDE ELEVATION
A300	BUILDING SECTION
A301	BUILDING SECTION
A302	BUILDING SECTION
A303	DETAILS
A304	DETAILS
A400	EXTERIOR DETAILS
A401	EXTERIOR DETAILS
A500	DETAILS
A501	DETAILS
A502	DETAILS
A700	GARAGE PLANS
A701	GARAGE ELEVATIONS
A702	GARAGE SECTIONS & TE DIAGRAMS
A703	GARAGE DETAILS
A704	GARAGE RESCHECK REPORT
S0	FOUNDATION PLAN
S1	FIRST FLOOR FRAMING PLAN
S2	SECOND FLOOR FRAMING PLAN
S3	LOFT FLOOR FRAMING PLAN
S4	ROOF FRAMING PLAN
S5	GARAGE FRAMING PLAN
S0	FOUNDATION DETAILS
SD0.1	FOUNDATION DETAILS
SD1	FRAMING DETAILS
SD2	FRAMING DETAILS
SD3	FRAMING DETAILS
SG	GENERAL NOTES
SWB1	FIRST FLOOR WALL BRACING PLAN
SWB2	SECOND FLOOR WALL BRACING PLAN
SWB3	WALL BRACING DETAILS & SCHEDULE

CALCULATIONS

BASEMENT:	
FINISHED:	1,209.3 SF
UNFINISHED:	350.9 SF
TOTAL:	1,560.2 SF
FIRST FLOOR:	1,806.7 SF
FRONT PORCH:	255.4 SF
REAR PORCH:	228.9 SF
SIDE PORCH:	61.5 SF
SECOND FLOOR:	1,612.9 SF
ATTIC:	619.6 SF
DETACHED GARAGE:	576 SF
2ND FLOOR :	406.9 SF
TOTAL GFA:	7,128.1 SF
HOUSE FOOTPRINT:	2,332.9 SF

LOT COVERAGE:

MONTGOMERY COUNTY

LOT= 133,830.62 SF

20% MAX COVERAGE (26,766.12 SF)

2,382.7 SF/ 133,830.62 SF= 1.8%

MATERIAL SYMBOLS

EARTH, CONCRETE, STEEL, BRICK, FINISH WOOD, CONCRETE MASONRY UNIT, ROUGH LUMBER BLOCKING, GYPSUM SHEATHING, SLAT BOARD, ACOUSTICAL TILE

ABBREVIATIONS

ABOVE FINISH FLOOR	AFF	EACH	EA	INTERIOR	INT	PLATE	PL	VERTICAL	VERT
ACOUSTIC	ACST	EAST	E			PLUMBING	PLMB	VESTIBULE	VEST
ADJUSTABLE	ADJ	ELECTRIC, ELECTRICAL	ELEC	JANITOR'S CLOSET	JC	PLYWOOD	PLYWD	VINYL COMPOSITE TILE	VCT
AIR CONDITIONING	A/C	ELEVATION	EL	JOINT	JT	POLYVINYL CHLORIDE	PVC	VOLTS	V
AIR HANDLING	AH	ELEVATOR	ELEV	JOIST	JST	POUND	LB		
AIR HANDLING UNIT	AHU	EMERGENCY POWER	EM	JUNCTION BOX	JB	POUNDS PER SQUARE INCH	PSI	WALLBOARD	WB
ALTERNATE	ALT	EMPTY CONDUIT	EC			PREFABRICATED	PREFAB	WELDED WIRE FABRIC	WWF
ALTERNATE CURRENT	AC	ENGINEER	ENGR	LAMINATED	LAM	PREFINISHED	PREFIN	WIDTH	W
ALUMINUM	AL	ELECTRIC WATER COOLER	EWC	LAVATORY	LAV	PRELIMINARY	PRELIM	WINDOW	WDW
AMPERES	AMP	EXHAUST	EXH	LEFT HAND	LH			WITH	W/
ANCHOR BOLT	AB	EXISTING	EX	LENGTH	L	QUARRY TILE	QT	WITHOUT	W/O
ARCHITECT	ARCH	EXPANSION	EXP	LIBRARY	LIB			WOOD	WD
AT	@	EXPANSION JOINT	EXP JT	LINEAR FEET	LF	RADIUS	RAD, R		
AVERAGE	AVG	EXTERIOR	EXT	LONG LEG HORIZONTAL	LLH	REFRIGERATOR	REF	YARD	YD
				LONG LEG VERTICAL	LLV	REINFORCING	REINF		
BEAM	BM	FAHRENHEIT	F			REQUIRED	REQD		
BOARD	BD	FEET PER MINUTE	FPM	MAINTENANCE	MAINT	RESILIENT	RES		
		FEET, FOOT	FT	MANUFACTURER	MFR	RETURN AIR	RA		
CABINET	CAB	FINISH	FIN	MASONRY	MAS	REVISION	REV		
CATALOG	CAT	FIRE EXTINGUISHER CAB.	FEC	MASONRY OPENING	MO	RIGHT HAND	RH		
CEILING	CLG	FLOOR	FL	MAXIMUM	MAX	ROOM	RM		
CENTERLINE	CL	FLUORESCENT	FLOUR	MECHANICAL	MECH	ROUGH OPENING	RO		
CERAMIC TILE	CT	FIRE RATED	FR	MEDIUM	MED				
CLOSET	CLO			MEZZANINE	MEZZ	SCHEDULE	SCHD		
COLUMN	COL	GAUGE	GA	MINIMUM	MIN	SECTION	SECT		
COMPANY	CO	GALLON	GAL	MISCELLANEOUS	MISC	SERVICE SINK	SS		
CONCRETE	CONC	GALLONS PER MINUTE	GPM	MOUNTED	MTD	SIMILAR	SIM		
CONCRETE MASONRY UNITS	CMU	GALVANIZED	GALV	MULLION	MUL	SOUND TRANSMISSION	STM		
CONFERENCE	CONF	GENERAL CONTRACTOR	GC			SPECIFICATION	SPEC		
CONTINUOUS	CONT	GROUNDED FAULT INTERUPT.	GFI	NOT IN CONTRACT	NIC	SQUARE	SQ		
CONTROL JOINT	C.J	GYPSUM	GYP	NOT TO SCALE	NTS	STANDARD	STD		
COORDINATE	COORD	GYPSUM WALLBOARD	GWB	NUMBER	#, NO	STAND PIPE	ST		
CORRIDOR	CORR					STAINLESS STEEL	SS		
CUBIC FEET	CF	HANDICAPPED	HDCP	OFFICE	OFF	STATION	STA		
CUBIC FEET PER MINUTE	CFM	HARDWARE	HDW	ON CENTER	OC	STEEL	STL		
		HARDWOOD	HDWD	OPENING	OPNG	STORAGE	STOR		
DEDICATED	DED	HEIGHT	HGT, H	OPPOSITE	OPP	STRUCTURAL	STRUCT		
DEPARTMENT	DEPT	HERTZ	HZ	OUNCE	OZ	SUSPENDED CEILING	SUSP		
DEPTH	D	HOLLOW METAL	HM	OVERALL	OA				
DETAIL	DET	HORIZONTAL	HORIZ	OVERHEAD	OH	TELEPHONE	TEL		
DIAGONAL	DIAG	HORSE POWER	HP			THICK OR THICKNESS	THK		
DIAMETER	DIA	HOT WATER HEATER	HWH	PAINTED	PTD	THRESHOLD	THRSLD		
DIMENSION	DIM	HOUR	HR	PANEL	PNL	TILE	T		
DISHWASHER	DW			PARTITION	PTN	TO BE SELECTED	TBS		
DOOR	DR	INCH	IN	PERPENDICULAR	PERP	TONGUE & GROOVE	T & G		
DOWN	DN	INFORMATION	INFO	PERSONAL COMPUTER	PC	TOP	T		
DRAWING	DWG	INSIDE DIAMETER	ID	PHASE	PH	TYPICAL	TYP		
DRINKING FOUNTAIN	DF	INSULATED, INSULATION	INSUL	PLASTIC LAMINATE	P LAM				

PROJECT INFORMATION

CLIENT/CONTRACTOR
PHIL SARDELIS
10776 TUCKER STREET
BELTSVILLE, MD 20705
240-417-5333
philsardelis@gmail.com

ARCHITECT
GTM ARCHITECTS
CONTACT: LUKE OLSON/DOUGLAS ROBERTS
7735 OLD GEORGETOWN ROAD
BETHESDA, MD 20814
(240) 333-2021
(240) 333-2070 FAX
lolson@gtmarchitects.com

CIVIL ENGINEER
CAS ENGINEERING
CONTACT: JARED SIMS CARHART, PD, MSE
10 SOUTH BENTZ STREET
FREDERICK, MD 21701
301-703-2346 (O)
303-217-1152 (C)
jcarhart@casengineering.com

STRUCTURAL ENGINEER
structBIM ENGINEERS
CONTACT: KAUSHAL KANSARA, P.E.
20130 LAKEVIEW CTR. PLZ.
SUITE 400
ASHBURN, VA 20147
(703) 405-9732 (C)
kaushal@structbim.com

PLANS PREPARED BASED ON THE FOLLOWING CODES:
INTERNATIONAL RESIDENTIAL CODE 2018

REVIEWED
By Michael Kyne at 2:21 pm, May 23, 2022

APPROVED
Montgomery County
Historic Preservation Commission

GTM ARCHITECTS
7735 OLD GEORGETOWN ROAD
SUITE 700
BETHESDA, MD 20814
(240)333-2000
(240)333-2001 FAX
WWW.GTMARCHITECTS.COM

Seal

STATE OF MARYLAND — LUKE C. OLSON — No. 15195 — ARCHITECT

I certify that these documents were prepared or approved by me, and that I am a duly licensed architect under the laws of the State of Maryland, license number 15195. Expiration Date: 12/06/2022

Consultant

Project
19 HIGH ST
LOT 4

Owner

Developer

PERMIT SET	04/11/2022

Issue Description	Date

GTM Project No.	18.0320
Checked By	GTM
Drawn By	LEO/NW
Scale	AS NOTED

Sheet Title
COVER SHEET

Sheet No.
001

COPYRIGHT, 2019 GTM ARCHITECTS, INC.

FILE NAME:

SPECIFICATIONS FOR RESIDENTIAL CONSTRUCTION

The purpose of the following specifications is to establish the level of quality required for both materials and workmanship. These notes are intended as a general outline; specific and additional requirements are indicated on the drawings. Unless noted otherwise in the contract documents, all Products and Materials shall be installed in strict compliance with the manufacturer's recommendations. The contractor should also note that not all of the items mentioned below may apply to the project.

GENERAL REQUIREMENTS

1. All work shall conform to the International Residential Code (IRC), 2018 edition and all applicable sections of the Montgomery County code for single family construction and applicable building codes including (but not limited to) IECC 2018.
2. The General Contractor shall stake off area of new construction and designate trees and shrubs for removal as required. Protect all landscaping beyond the areas of construction.
3. The General Contractor shall coordinate phasing and time limits for new construction with the Owner, so as to establish an acceptable payment schedule related to the status of the project.
4. Any permits required for the project shall be obtained by the General Contractor, unless informed otherwise by the Architect that the permit has been obtained.
5. The General Contractor shall store materials and equipment in a safe and suitable place during the construction process. The Owner is not responsible for any losses of material. The contractor shall be responsible for damage to installed and (or) stored materials until substantial completion or as otherwise noted in the contract document.
6. All debris shall be periodically removed from the site so as to not create a physical or visual hazard to the Owner.
7. The General Contractor shall be licensed in Montgomery County, Maryland, and shall guarantee the project labor and materials for a period of one year after the Architect determines the work to be substantially complete, as per county laws.
8. The General Contractor shall provide competent daily supervision of the project.
9. The General Contractor shall notify the related authorities for inspection of the work as related to the specific areas required by the county.
10. The General Contractor shall Carry Workmen's Compensation Insurance for every person employed by him on the premises and shall maintain such insurance in full force during the entire time of this contract. The General Contractor shall carry Comprehensive General and Automotive Liability Insurance of $25,000 to $50,000 minimum. These requirements can be amended by the Owner if specified by the contract.
11. All drawings, specifications, and copies furnished by the Architect are the documents for the construction of this project only and shall not be used in any other circumstance.
12. The General Contractor shall carefully study the contract documents and report to the Architect any error, omission, or inconsistency they may discover.
13. The General Contractor shall provide and pay for all labor, materials, equipment, tools, machinery and other facilities and services necessary for proper execution and completion of the work, and shall guarantee no mechanic liens against the project at completion.
14. The Contract Sum is stated in the agreement and is the total amount payable by the Owner, which designates the addition, deletion, or revision to the contract. The Change Order must also designate the change in the original contract sum.
15. At least seven days before the date of each progress payment established by the agreement, the General Contractor shall submit to the Architect and Owner an itemized application designating which portion of the work has been completed.
16. The Contractor shall verify dimensions prior to construction, and all discrepancies shall be brought to the attention of the Architect so that clarifications can be made. The Contractor shall field verify all dimensions related to existing conditions. Written dimensions take precedence over scaled sizes. Do not scale drawings to determine missing dimensions.
17. The Contractor shall be responsible to have new utility line services (gas, electric, telephone) installed to the house connection/meter location.

DEMOLITION NOTES

1. Every care shall be taken during demolition to protect the house by means of temporary supports and braces as necessary to prevent any structural failure during removal and replacement of existing structural members.
2. Temporary walls and dust barriers shall be installed as necessary to prevent circulation of dirt and dust into portions of the house that are not part of the work.
3. All dashed walls, fixtures, windows, etc., are to be removed. See Demolition Sheets for additional information.
4. Conduct all demolition operations in compliance with applicable codes and ordinances.
5. Coordinate demolition with work of subcontractors.
6. Maintain the existing structure in a watertight condition at all times.
7. Provide the necessary enclosures to allow the owner to maintain comfortable temperatures within the occupied portions of the home during construction.

GENERAL STRUCTURAL NOTES

1. Work shall be done in accordance with the International Residential Code (IRC), 2018 Edition.
2. The design gravity live loads are as follows:
   - Roof load (snow): 30 LL + 15 DL = 45 PSF
   - Living Spaces: (1st Floor) 40 LL + 15 DL = 55 PSF
   - Sleeping Spaces: (2nd Floor) 30 LL + 15 DL = 45 PSF
   - Exterior Decks: 60 LL + 15 DL = 75 PSF
   - Live Load Deflection Limitation for floors and stairs shall be L/360
   - Live Load Deflection Limitation for roofs shall be L/240

FOUNDATIONS

1. The foundation for the structure has been designed for the assumed bearing pressure of 1,500 PSF. This is to be verified by the contractor prior to the footings being poured. It is also assumed that there is no water condition present.
2. Basement walls have been designed for an assumed equivalent fluid pressure of 55 PSF.
3. Excavations for spread footings and continuous footings shall be cleaned and hand tamped to a uniform surface.
4. Slabs on grade shall be underlaid by a minimum of 4" of granular material having a maximum aggregate size of 1.5 inches and no more than 2% fines. Prior to placing the granular material, the floor subgrade shall be properly compacted, proofrolled, free of standing water, mud, and frozen soil. Before placement of concrete, a (min. 6 mil poly) vapor barrier shall be placed on top of the granular fill and sealed to vertical foundation walls.
5. Bottoms of all exterior footings shall be 2'-6" minimum below finished grade. Footings shall project a minimum of 12" into undisturbed existing natural ground having allowable bearing capacity stated. Depths of footings subject to change if soil conditions are other than assumed.

ENERGY CONSERVATION

1. The following provisions for thermal resistance meet or exceed the requirements stipulated by the 2018 International Energy Conservation Code (IECC), climate zone 4A. These values are the minimum acceptable. See drawings for specific values required for the project.
2. Insulation

			IECC
A.	Ceiling (of uppermost story)		R-49, or R-38 continuous
B.	Vaulted Ceiling		R-49 w/lesser of 500 sf or 20% of total insulated ceiling area R-30 allowance
C.	Frame walls (with storm window or double glazing)		R-20 or 13+5 (exterior)
D.	Rim Joists		Equal to wall below
E.	Floors over unheated spaces (including floor overhangs)		R-38
F.	Masonry walls (enclosed heated living areas)		R-13 or R-10 continuous
G.	Slab on grade (heated space) 24" Perimeter Insulation		R-10
H.	Windows		U-0.32 SHGC-0.40
I.	Doors		See section R402.3.4

3. Air Infiltration
   - A. Provide 1/4" x 5.5" compressible sill sealer between foundation wall and all sill plates. Sill sealer shall be set such that no gaps exist at sealer butt joints.
   - B. Windows: Not exceeding three tenths (0.3) CFM of sash crack
   - C. Sliding glass doors: not exceeding three tenths (0.3) CFM per square foot of door area
   - D. Swinging doors: Not exceeding five tenths (0.5) CFM per square foot of door area. Provide 1" compressible sill sealer between foundation wall and all sill plates.
   - E. Building thermal envelopes shall be tested per IECC R402.4.1.2 and verified as having air leakage not to exceed 3 air changes per hour.
   - F. Recessed lighting in the thermal envelope shall comply with IECC R402.4.5
   - G. Systems duct and piping installation shall comply with IECC R403 including Whole-House Mechanical Ventilation system installation.

TERMITE CONTROL SOIL TREATMENT

1. Treat soil with Bayer Corporation, Premise 75, in strict accordance with manufacturer's recommendations.
2. Remove all extraneous sources of wood cellulose and other edible materials such as wood debris, tree stumps and roots, stakes, formwork, and construction waste wood from soil within and around foundations. Loosen, rake, and level soil to be treated except previously compacted areas under slabs and footings.
   - A. Slabs-on-Grade and Basement Slabs: Under ground-supported slab construction, including footings, building, slabs, and attached slabs as an overall treatment. Treat soil materials before concrete footings and slabs are placed.
   - B. Foundations: Adjacent soil including soil along the entire inside perimeter of foundation walls, along both sides of interior partition walls, around plumbing pipes and electric conduit penetrating the slab, and around interior column footers, piers, and chimney bases; also along the entire outside perimeter, from grade to bottom of footing. Avoid soil washout around footings.
   - C. Crawlspaces: Soil under and adjacent to foundations as previously indicated. Treat adjacent areas including around entrance platform, porches, and equipment bases. Apply overall treatment only where attached concrete platform and porches are on fill or ground.Crawlspaces used as plenum spaces strictly follow manufacturer's recommendedations.
   - D. Along driplines of roof overhangs without gutters.
   - E. Where condensate lines from mechanical equipment drip or drain to soil.
   - F. At plumbing penetrations through ground-supported slabs.
   - G. Other sites and locations as determined by licensed installer.

WARRANTY

Special Warranty: Manufacturer's standard form, signed by Applicator and Contractor certifying that termite control work, consisting of applied termiticide treatment, will prevent infestation of subterranean termites. If subterranean termite activity or damage is discovered during warranty period of five (5) years from Substantial Completion, re-treat soil and repair or replace damage caused by termite infestation.

CONCRETE

1. All concrete construction shall conform to the latest A.C.I. code 332 and shall comply with ACI 117, "Specifications for Tolerances for Concrete Construction and Materials" unless modified by requirements in the Contract Documents.
2. Concrete shall have natural sand fine aggregates and normal weight coarse aggregates conforming to ASTM C33, Type 1 Portland Cement conforming to ASTM 150, and shall have a minimum 28-day compressive strength (F/C) as follows:
   - F/C = 2,500 PSI for footings, interior slabs on grade (except garages) and fill in concrete blocks
   - F/C = 3,000 PSI for foundation walls exposed to weather.
   - F/C = 3,500 PSI for drives, porches, walks, steps, and garage slabs.
   - F/C = 4,000 PSI for precast concrete units.
3. All poured in place concrete exposed to weather conditions, including the garage floor, shall be air entrained by 6% of concrete volume. No calcium chloride or other admixtures shall be used except as approved in writing by the Owner.
4. Slabs on grade: except where otherwise noted, shall be min. 4" thick, reinforced with 6x6 W1.4xW1.4 WWF Lap mesh 6" in each direction. Slab shall be placed on a layer of 6 mil polyethylene, sealed to fdn. walls, over a 4" layer of washed gravel. Refer to drawings for location of thermal insulation.
5. Concrete finish: Exposed exterior steps, stoops and slabs shall first have a steel trowel finish and then a very light broom finish. Exposed interior and garage shall receive a steel trowel finish.
6. Expansion joints: Non-organic, Owner approved, expansion joint material shall be cast in place where slabs abut masonry or concrete walls to prevent bonding between the two materials.
7. Curing: Exposed concrete surfaces shall be sealed with an approved chemical curing compound within one hour of the final troweling. Curing compound label shall state that its use will not interfere with adhesion of subsequent floor finishes.
8. Reinforcing steel: Reinforcing steel for the ties shall be intermediate grade deformed billet steel conforming to ASTM spec. A615-40. All other reinforcing steel shall conform to ASTM spec. A615-60. Welded wire fabric to conform to ASTM A-185. Fabric shall be supplied in flat sheets and lapped to mesh at splices. All reinforcing shall be detailed, fabricated and installed in accordance with the latest detailing manual A.C.I. 315.
9. Reinforcement designated as "continuous" shall lap 36 bar diameters at splices unless noted otherwise.
10. Horizontal footing and walls: reinforcement shall be continuous and shall have 90 degree bends and extensions, or corner bars of equivalent size lapped 36 bar diameters, at corners and intersections.
11. Footings:
    - A. Bottom of footings shall extend a minimum of 2'-6" below any surface subject to freezing: footings shall extend at least 12" into undisturbed soil or set on controlled compacted fill. Depth of footing subject to change if soil conditions are other than assumed. Bearing value of soil is assumed to be 1,500 PSF with no water condition present. Minimum bearing value of controlled fill shall be certified by a licensed geotechnical engineer.
12. Anchor bolts: set anchor bolts or approved straps as shown. Bolts for wood sill plates shall be 1/2" in diameter and project 8" into concrete; set straps or bolts 12" max from end of any plate and 6'-0" max O.C. spacing, unless shown otherwise.

MASONRY

1. Brick shall conform to ASTM C-62. Mortar shall conform to federal specifications SS-C-18IE-type II. Lay brick only when outside temperature is 45° F and rising. Protect all work from cold and frost and ensure that mortar will cure without freezing. Calcium chloride and antifreeze admixture will not be acceptable.
2. Bearing steel and wood beams shall be supported on solid masonry piers as indicated. Other structural members (lintels, etc.) shall be supported on 8" of solid masonry. All beams and lintels shall have minimum horizontal bearing of 4".
3. Anchor bolts: Set anchor bolts or approved anchor straps as required. Bolts for wood sill plates shall be 1/2" diameter and project 16" into masonry. Set bolts or straps 12" max. from end of any plate.
4. CMU walls shall have horizontal wire joints reinforcement at 16" O.C. vertically, or as indicated.
5. Provide 4" solid masonry on all sides of joists or beams entering masonry party walls.
6. Brick Veneer:
   - A. Secure brick veneer with 16 GA hot-dipped zinc coated wall ties at 16" O.C. horizontally and vertically.
   - B. Provide flashing at first course above grade, at lintels, sills and elsewhere as shown. Provide 3/16" diameter tube weeps or cellular plastic head joint-type weeps at 24" O.C.
   - C. Provide through-wall flashing above all unsheltered openings. Flashing shall be end-dammed at all terminations.
   - D. Install high-density polyethylene or polyester cavity drainage material, equal to "mortar net," above all flashing. Material shall be sized to fill the width of the cavity.
7. Stone Veneer:
   - A. Vapor permeable weather-resistive barriers: two-ply asphalt saturated Kraft Grade D breather type sheathing paper.
     - Basis of design is FortifiberΦ / two-ply super jumbo texΦ 60 minute
     - Reference standard; federal specification W-B-790A, Type I, Grade D, Style 2
     - Moisture vapor transmission: 35 grams minimum; ASTM E 96
     - Water resistance: 150 minutes (Professional), ASTM D 779
8. C.M.U.'s to have water repellent block admixture; 'Dry-Block' by W.R. Grace recommended.
9. Exterior mortar to have water repellent admixture.
10. Unless noted otherwise, tool all joints concave.
11. Fully bed in mortar face shells and webs of first course of CMU.
12. All masonry joints shall be fully filled with mortar, including head joints.

ADHERED MASONRY VENNER

1. The adhered Masonry Veneer (AMV) system shall be installed in compliance with IRC R703.12 and ASTM C1780 "Standard Practice for Installation Methods for Cement-based Adhered Masonry Veneer" and The Masonry Veneer Manufacturers Associations (MVMA) "Installation Guide and Detailing Options for Compliance with ASTM C1780". The cladding unit manufacturers installation recommendations are also to be followed.
2. Two separate layers of Water Resistant Barrier (WRM) shall be provided over the sheating substrate.
3. Galvanized lath shall be securely fastened to the wall structure with approved fasteners. A mortar scratch coat shall fully encapsulate the lath and have a scored surface.
4. Cladding units shall be set over a fully cured mortar scratch coat. Cladding units shall be adjusted to comply with the cladding unit manufacturers recommendations and ASTM C1780. Doors and windows shall be adjusted to provide proper operation of opening.
5. Joints shall be filled with "thumb-print hard" adhesive mortar with a slightly concave profile, unless noted otherwise. Prior to joint filling a field mock-up shall be provided for color and workmanship approval.

STEEL

1. Structural steel shall conform to ASTM A36
2. Steel beams shall conform to ASTM A572 Grade 50.
3. All steel angles, lintels, beams, columns, etc. are to be shop primed with red lead or red oxide primer or approved equal. Structural steel at or below grade shall be painted with two coats on an asphaltic base paint and protected with a minimum of 2" solid masonry or concrete.
4. For all openings or recesses in brick or brick-faced masonry walls not specifically detailed, provide one steel angle for each 4" of wall thickness. Provide lintels according to the schedule below:

Lintel	Masonry Opening	Min. Bearing
L 3-1/2 X 3-1/2 X 1/4	Up to 3'-0"	4"
L 3-1/2 X 3-1/2 X 5/16	3'-1" to 4'-0"	6"
L 4 X 3-1/2 X 1/4	4'-1" to 5'-0"	6"
L 4 X 3-1/2 X 5/16	5'-1" to 6'-0"	6"
L 5 X 3-1/2 X 5/16	6'-1" to 7'-0"	8"
L 6 X 4 X 3/8	7'-1" to 8'-0"	8"

Note: For openings greater than 8'-0", consult with Architect and Engineer.

WOOD & CARPENTRY

1. Unless otherwise noted on drawings, all structural wood members shall be #2 Southern Pine or equal, with the following combination of unit stresses:

Extreme fiber stress in bending	1,200 PSI
Compression parallel to the grain	1,000 PSI
Compression perpendicular to the grain	565 PSI
Modulus of Elasticity Shear Stress	1,500,000 PSI

   Installation Tolerance; walls - a maximum out-of-plumb limit of 1/4" in 10' vertically and horizontal in-plane misalignment of 1/8" from adjacent framing shall be achieved. Plates and floors shall be installed within a 1/4" maximum tolerance for straightness relative to the intended location.
2. Manufactured joists and trusses (if shown on drawings) must be designed and certified by a licensed engineer and submitted to the Architect and local building department for approval.
3. Roof rafters and/or trusses shall be connected at each bearing point with one prefab-90 PSI galvanized rafter tie (hurricane clip) by Simpson or approved equal. Similarly, floor joists and trusses shall be connected with one prefabricated joist hanger. Each anchor shall be 18 GA minimum thick.
4. Provide double joists under all parallel partitions, at joists that support headers, and at headers that support joists. Use joist hangers where applicable.
5. All joists and rafters shall be rigidly braced at intervals not exceeding 8'-0".
6. Double studs at header bearing, double joists and rafters at all openings according to schedule below (unless noted otherwise on drawings):
   - Double 2 x 4 Up to 3'-0"
   - Double 2 x 6 Up to 4'-0"
   - Double 2 x 8 Up to 5'-0"
   - Double 2 x 10 Up to 7'-0"
   - Double 2 x 12 Up to 8'-0"

   All double headers and joists shall be joined with a minimum of two rows of 16 d nails 12" on center.
7. Provide blocking, banding, crush blocks, stiffeners, or rim joists, as required, at joist ends.
8. Floor joists shall have a minimum bearing of 2" on framed walls. All beams shall have minimum bearing of 4" bearing on all supports. Provide moisture protection to end of beams pocketed into masonry walls.
9. Wood joists, studs, and beams shall not be cut or notched unless authorized by the Architect. Drilled holes shall be centered at mid-depth of the member and the hole diameter shall not exceed 1/3 the actual depth of the member. No holes shall be drilled within 2' from the ends or within the middle 1/3 of the span. Provide 4" clear between holes.
10. Existing conditions shall be verified by the Contractor. Any existing damaged wood members shall be identified and replaced by the Contractor.
11. Contractor shall be responsible for providing necessary bracing and shoring of existing members and walls while altering the structure.
12. Provide 2x4 intermediate blocking at all bearing and non-bearing partitions.
13. All plywood shall be APA span rated. Use exterior grade plywood wherever edge of face will be exposed to weather. Interior plywood exposed to weather during construction shall be Exposure I min.
    - A. Exterior wall sheathing shall be 1/2" plywood unless noted otherwise.
    - B. Subflooring shall be 3/4" tongue and groove plywood, glued and screwed to the floor joists as per APA recommendations.
    - C. Where spacing of roof structure members is 16" O.C., roof sheathing shall be 1/2" plywood (3/4" where roofing is slate or tile). Where spacing of roof structure members is 24" O.C., roof sheathing shall be 5/8" plywood (3/4" where roofing is slate or tile). Provide "H" clips at butt joints of roof sheathing.
14. MICRO-LAM L.V.L. (laminated veneer lumber) beams shall be manufactured by Trus Joist MacMillan or approved equal. Beams shall be installed according to manufacturer's recommendations. When fastening two or more beams together, provide a minimum of two rows of 16 d nails 12" on center.
15. TJI Floor Joists are to be manufactured by Trus Joist MacMillan or approved equal. Install per manufacturer's recommendations.
16. The following wood elements are to be pressure treated with preservative, bearing the AWPA standard use category label UC3B or UC4B (for ground contact):
    - A. Sill plates resting on concrete or masonry walls.
    - B. Sill plates resting on concrete slabs on grade.
    - C. Joists which enter concrete or masonry walls and have less than 1/2" clearance on tops, sides, and ends.
    - D. Sleepers resting directly on concrete slabs.
    - E. Exterior porch and deck framing, decking, and stairs.
17. Fasteners, hangers, and metal accessories used in pressure treated wood construction shall be type 304 or 316 stainless steel. Treated lumber shall not be placed in contact with aluminum flashing or other aluminum components.
18. Exterior Wood Trim:
    - A. All exterior wood trim shall be clear pine or redwood.
    - B. All trim shall be primed on 6 sides (including cut ends) prior to installation.
    - C. All outside corners shall be mitered and no end grain shall be exposed to view. No butt joints will be accepted
19. Exterior Synthetic Trim shall be "AZEK," with traditional smooth surface. Fasteners, joint cement, and installation procedures shall be in accordance with manufacturer's recommendations.
20. Siding: Refer to drawings for type specified.
    - A. Cement board shall be non-asbestos fiber-cement material complying with ASTM Standard Specification C1186 Grade II, Type A. Materials shall be equal to those manufactured by James Hardie Building Products.
    - B. Wood siding and sidewall Shingles shall be kiln dried Western Red Cedar, "Clear V.G. Heart" grade for clear and transparent stain finishes, and "A Clear" grade for semi-transparent stain or opaque finishes. Semi-transparent stain or opaque finish shall be applied in strict accordance to manufacturer's recommendations; including, but not limited to, substrate preparation and primer/sealer application to all wood surfaces (6-sides). Fasteners shall generally be type 304 stainless steel, but shall be type 316 for coastal applications. Install wood siding and shingle products over "Cedar Breather" by Benjamin Obdyke Inc. and 30# felts in accordance with manufacturer's instructions. Siding installation and finishing shall be as recommended by the Western Red Cedar Lumber Association. Siding shall be sealed prior to installation, fasteners shall be concealed where possible or arranged in a uniform pattern.
21. Coordinate all floor and wall framing with ductwork. Refer to mechanical notes.
22. Folding Attic Access Ladder shall be 22 1/2" x 44" with self-trimming flange, pre-finished door panel, and gas-piston counterbalance. The door panel shall have continuous integral weatherstripping, R-10 insulation, and two key operated locking pins to draw the door tight. Ladder steps shall be pine, doweled to pine stringers. Contact Resource Conservation Technology at 410-366-1146. Additional insulation hood shall be provided to meet required insulation value per IECC R402.2.4.

DOORS AND WINDOWS

1. AWI "Custom Standard" shall apply to the workmanship, installation and finishing of wood doors and windows components.
2. The tops, bottoms, and edges of all doors shall be finished.
3. Any defects that prevent the door or window from serving its intented purpose satisfactorily shall be rejected, such as material that is crooked, warped, bowed, chatter marked, plane or tool marked, chipped, or otherwise defective.
4. Doors and windows shall be adjusted to provide proper operation of opening.

RADON DETECTION AND TREATMENT

1. The Contractor shall provide a venting system consisting of a minimum of 3" diameter ABS, PVC or equivalent gas-tight plumbing pipe inserted into the sub-slab gravel base (at all new concrete slabs). A 'T' fitting or equivalent method shall be used to ensure that the pipe opening remains with the sub-slab permeable material. The pipe shall terminate at least 12" above the high side of the roof penetration. Contractor shall coordinate location of pipe with Architect prior to installing the pipe.
2. Install, per IRC, 2018 edition, Appendix F 'Radon Control Methods.'
3. The Contractor shall provide any other measures as required by local codes.

VENTILATION

1. Where attics are indicated to be ventilated, they are to be vented in one of the following ways (refer to drawings for specifics):
   - A. Continuous ridge venting and continuous soffit venting. Ridge vent shall be by Cor-A-Vent or approved equal. Continuous screen soffit vents shall be a minimum of 2" wide. Circular louver vents between each rafter may be used at the soffit if shown on the drawings.
   - B. Screen louvers or vents with an open area equal to one square foot for every 300 square feet of attic space.
2. Provide foundation vents for all crawl spaces. Refer to drawings for locations.
3. Venting for appliances and exhaust fans:
   - A. Provide venting to the exterior as per manufacturer's recommendations for all appliances. Location of ductwork and vent on exterior shall be approved by Architect prior to installation.
   - B. Provide exhaust fans for bathrooms, etc., as shown on drawings. Location of ductwork and vent on exterior shall be approved by Architect prior to installation. Ducts within unconditioned spaces shall be insulated to prevent condensation.
4. Provide Whole-House ventilation system to comply with IECC R403.4

MOISTURE PROTECTION

1. Appropriate sealants shall be selected for each substrate depending upon location (interior or exterior), humidity, moisture conditions, and traffic conditions. Use primers as required.
2. Color of caulking shall be coordinated with adjacent materials and must be approved by Architect prior to application.
3. Joint fillers shall be used:
   - A. To control the depth of sealants in joints.
   - B. To meet the requirements for resilient separations in horizontal joints in floor, pavements, patios, sidewalks, and other light traffic areas.
4. Bond breakers shall be used to prevent adhesion to more than two surfaces.
5. Masonry foundations shall be parged to a thickness of 3/4" minimum.
6. Waterproof all below grade foundation walls with a polymer-modified asphalt emulsion similar to TREMCO "TUFF-N-DRI Classic". Dry/ cured membrane thickness shall be minimum 40 mil. Installation and substrate preparation shall be per manufacturer's recommendations. Install subsurface drainage composite similar to CETCO "Aquadrain 10X" over the cured membrane with asphalt emulsion adhesive similar to Henry 111 Insulbond.
7. Footing drains shall be min. 4" in diameter and installed on the exterior of all foundations.
8. All flashing shall be installed according to the building code. An eave flashing strip of 40 mil. self-adhering rubberized asphalt sheet membrane shall be applied to extend from the edge of the roof to a point 24" min. inside the interior wall line of the structure, and at all valleys.
9. All membrane roofing to be approved by Architect prior to installation.
10. All roof shingles to be approved by Architect prior to installation.
11. Asphalt shingle roofs with slopes from 2 in 12 to 4 in 12 shall have two layers of #15 roofing felt applied in accordance with with the International Residential Code.
12. Flashing"
    - A. Through-wall and other concealed flashing shall be a composite of fiberglass fabric, 5 oz. copper and asphalt, equal to York Copper Fabric.
    - B. Exposed flashing shall be 16 oz. copper.
13. Painted aluminum drip strips shall be installed at the eave and rake edges of the roof sheathing for shingle roofs, and above window and door trim where indicated.
14. Exterior Insulation and Finish Systems (EIFS) shall be equal to Dryvit, Residential MD System, with Dryvit drainage mat installed between the secondary weather barrier and the insulation board.
15. Cedar roof shingles shall be No. 1, Blue Label, red cedar. Install over "Cedar Breather" by Benjamin Obdyke Inc. and 30# felts in accordance with manufacturer's instructions.
16. Standing seam roofing shall be 16 ounce copper with water-tight standing seams. For slopes greater than 3 in 12 provide #30 roofing felt underlayment on solid sheathing. For slopes 3 in 12 or less provide self-adhering 40 mil ice and water guard membrane over the entire area to receive standing seam roofing.

FINISHES

Gypsum Wallboard:

1. Gypsum wallboard shall be ASTM C-36 as follows:
   - A. Regular (1/2"): except where noted.
   - B. Water resistant (1/2"): at bathroom ceilings and walls that are not tiled.
   - C. Durock interior tile backer board (1/2"): at all surfaces that have tile.
2. Gypsum boards shall have tapered edges to accommodate joint reinforcement.
3. Provide edge corner beads, trim, taping, and joint compounds as required for the proper completion of the job. Materials shall be by U.S. Gypsum or approved equal.
4. Finishing requirements:
   - A. For typical walls and ceilings provide a Level 4 Finish as defined by the Gypsum Association.
   - B. For surfaces noted to receive semi-gloss or gloss paint provide a Level 5 Finish as defined by the Gypsum Association.

Hardwood Flooring:

1. Unless noted otherwise, provide wood strip flooring where shown on the drawings.
2. Wood strip flooring to be oak. Where abutting existing floor, new floor shall match existing in size and grain. Elsewhere, oak shall be "clear" grade, in accordance with the national Oak Flooring Manufacturer's Association.
3. Install flooring in strict accordance with the recommendation of the National Oak Flooring Manufacturer's Association.
4. After the floors have been sanded, the flooring contractor shall apply a minimum of four stain and urethane samples in two foot by two foot areas on the floor for the owner to review. The owner shall have a minimum of two days to make a selection.

Ceramic Tile:

1. Provide ceramic tile and accessories in accordance with the Tile Council of American Specifications 137.1, in colors and patterns to be specified by the owner.
2. Setting materials: comply with pertinent recommendations contained in the Tile Council of America "Handbook for Ceramic Tile Installation."
3. Installation: comply with ANSI A108.1, ANSI A108.2, and the "Handbook for Ceramic Tile Installation" of the Tile Council of America.
   - A. Extend tile into recesses and under equipment and fixtures to form a complete covering without interruptions.
   - B. Terminate tile neatly at obstruction, edges, and corners, without disruption of pattern or joint alignment.
   - C. Align joints when adjoining tiles on floor, base, trim, and walls are the same size.
   - D. Layout tile work and center the tile fields in both directions in each space or on each wall area.
4. Replacement reserve: Contractor shall furnish to the Owner one unopened box of additional tiles for future repairs and maintenance work.

Carpet:

1. Provide carpeting as indicated on the drawings. Refer to allowances on schedule sheet.

Vinyl Tile:

1. Installation of all vinyl composition tile (VCT) shall be done in a manner which conforms with:
   - ASTM E 648,
   - ASTM E 84, AND
   - ASTM E 662.
2. Replacement reserve: Contractor shall furnish Owner with one unopened box of additional tile for future repairs and maintenance.

Paint:

1. All paint and primers to be Benjamin Moore or approved equal. Refer to schedule for colors and types.
2. All surfaces to be painted shall receive one primer coat and two finish coats.
3. All paint shall be applied according to manufacturer's recommendations.

Architectural Woodwork and Trim:

1. All millwork trim and molding shall be installed accordingly to the quality of standards of the Architectural Woodwork Institute (AWI).
2. All interior trim and millwork shall conform to AWI "custom standards."
3. Flat trim shall be clear pine or approved equal.
4. All corners of trim and siding are to be mitered, except inside corners of interior running trim which shall be coped. Exposed end grains will not be accepted.
5. All millwork and trim shall be installed by craftsmen with experience in work of this type. All work shall be first class in every regard and consistent with the best practices of the trade.

FIRE AND LIFE SAFETY

1. Stairs:
   - A. 7 3/4" max rise
   - B. 10" min tread
   - C. 6'-8" min head room
   - D. Height of handrails shall be continuous, 34" (min) to 38" (max) above finished stair treads. Handrails required at stairs with 3 or more risers.
   - E. Guardrails shall be 36" (min) to 42" (max) above finished floor.
2. Provide a clear window opening of 5.7 square feet with no less than 20" clear wide and 24" clear high for sleeping area. The sill of this windows shall be no more than 44" above the finished floor.
3. Provide safety glass in all exterior doors, storm doors, sliding glass doors, shower doors, and tub enclosures above and adjacent to spas and tubs and where the glass is closer than 18" to the floor and exceeds 9 square feet in area.
4. Ground metal siding.
5. Smoke detectors shall be provided on every floor, in each bedroom and in each hall outside of bedrooms, and integrated with the electrical system with battery backup.
6. If a fuel-burning appliance, fireplace, or attached garage is present, an interconnected battery back up carbon monoxide alarm or detector must be installed outside all sleeping areas and on all floors. If fuel-buring appliance or fireplace is present in any sleeping area, an interconnected carbon monoxide alarm or detector must also be installed in that room as required per local jurisdiction.
7. Flues shall be class B except solid fuel flues, which shall be class A.
8. Top of flue shall be 2'-0" above any part of structure within 10'-0" of flue.
9. Interior finish of walls and ceiling shall have a flame spread rating not greater than Class III.
10. Carpeting shall meet federal regulation DOC FF-1.
11. Prefab fireplaces shall be (U.L.) rated and installed according to manufacturer's specifications.
12. Provide outside air for combustion in all prefab and masonry fireplaces.

ELECTRICAL AND LIGHTING NOTES

1. Electrical contractor shall size and arrange all circuits in accordance with the National Electric Code as well as all local codes. Service to be upgraded as required.
2. Wall outlets are to be mounted 1'-6" above finished floor unless noted otherwise.
3. Switches are to be mounted 4'-0" above finished floor unless noted otherwise.
4. Mounting heights are to the vertical center of the equipment to the finished elevation of the floor.
5. All new switch and outlet styles are to be approved by Owner prior to installation.
6. Provide hardwired smoke detectors on all floors, located as per Montgomery County Code.
7. Electrician shall locate all fixtures, switches, outlets, etc. prior to running wiring. Owner, Architect, and Electrician to meet at a mutually agreed upon time to review locations. The purpose of which is to allow for possible relocation prior to wiring.
8. Owner is allowed to add an additional ten (10) items (switches, cable, phone, outlet, etc., or any combination) at no additional charge to the owner.
9. Contractor shall determine, based on an on-site review of existing and proposed electrical systems, whether an electrical service heavy-up will be required, and shall include the costs of all required upgrades in their Contract Amount.
10. Provide door bell, transformer, and chime for front door and where indicated. In lieu of Owner's selection otherwise, price shall be based on the following: Illuminated Button - Destination Lighting product number 15921; Transformer - 16V; Chimes - Teiber Model CTSB-or STPW-, in Owner's choice of finish. Verify all selections and mounting locations with Owner prior to purchasing.
11. Per IECC R404.1 90% of installed lighting fixtures must contain high efficacy lamps.

MECHANICAL NOTES

1. All work shall be done in accordance with the International Residential Code (IRC), 2018 Edition, as well as IECC 2018 and other local codes including a compliant Manual J load calculation/ design in accordance with ACCA recommendations.
2. Unless otherwise indicated in Contract Documents, Contractor shall be delegated to design a fully functional and performing mechanical system in accordance with applicable mechanical codes and standards. Contractor shall submit all duct layouts and air handler locations (and thermostat locations) to the Owner and the Architect for approval prior to the commencement of framing. No extras will be given for any modification required to the framing due to ductwork.
3. All exterior unit locations to be coordinated with Owner and Architect.
4. Air conditioners shall be Energy Star rated and shall have a minimum 13 SEER rating with two zones each. Gas furnaces shall have a minimum Annual Fuel Utilization Efficiency rating of 90%.
5. Equipment will be Carrier or approved equal.
6. Ductwork will be galvanized sheet metal and flex.
7. Registers and return grilles are Hart & Cooley or equal.

PLUMBING NOTES

1. All work shall be done in accordance with the International Residential Code (IRC), 2018 Edition, as well as IECC 2018 and other local codes.
2. Contractor shall provide riser diagrams as required for permit, and shall submit to the Architect proposed locations of all waste and supply lines prior to the commencement of framing. No extras will be given for any modification required to the framing due to plumbing lines. Provide cast iron at vertical waste lines.
3. Unless otherwise indicated in Contract Documents. Contractor shall be delegated to design a fully functional and performing water supply and waste system in accordance with applicable plumbing codes and standards. Install water heater and reserve tank per requirements of the house with recirculate system.
4. Provide drain pans under all water heaters and washing machines, and pipe the pan to the sanitary drain upstream of a trap.
5. Contractor shall make a count of existing and proposed fixtures to determine whether a water or sewer upgrade will be required, and shall include the costs of all required upgrades in his Contract Amount. The count of existing fixtures shall be based on an on-site inspection.
6. Provide cast iron at vertical waste lines.
7. Locate plumbing clean out plugs in bottom 1/3" of wall, typical.

STEAM SHOWER

1. Wall construction: Provide ceramic tile over dryset or latex Portland cement mortar bond coat over tile backer board over Dow insulation board over 2x4 studs.
2. Ceiling construction: Same as walls, provide continuous sloped ceiling (1/2" per foot), and provide rounded inside corner tile at joint between wall and ceiling.
3. Insulate all walls, ceiling, and floor adjacent to steam shower.
4. Steam shower to be watertight, including a watertight shower door.
5. Steam Unit: "Mr. Steam model #MS-150, 6kw or approved equal. Provide the following connections: water inlet 3/8" NPT, steam outlet NPT, drain 3/8" NPT. Follow all manufacturer's specifications.

ROOFTOP-MOUNTED PHOTOVOLTAIC SYSTEMS

1. Structural support for all rooftop-mounted photovoltaic systems and other considerations shall comply with 2018 IRC Section R324.4

STATIONARY STORAGE BATTERY SYSTEMS

1. The installation of battery storage systems shall comply with 2018 IRC Section R327

FILE NAME:

REVIEWED
By Michael Kyne at 2:21 pm, May 23, 2022

APPROVED
Montgomery County
Historic Preservation Commission

GTM ARCHITECTS

7735 OLD GEORGETOWN ROAD
SUITE 700
BETHESDA, MD 20814
(240)333-2000
(240)333-2001 FAX
WWW.GTMARCHITECTS.COM

GTM

Seal

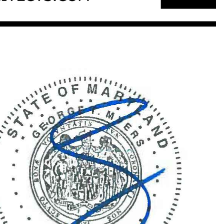

I certify that these documents were prepared or approved by me, and that I am a duly licensed architect under the laws of the State of Maryland, license number 8385, Expiration Date: 12-06-2022.

Consultant

Project
19 HIGH ST LOT 4

Owner

Developer

Issue Description	Date
PERMIT SET	04/11/2022

GTM Project No.	18.0320
Checked By	GTM
Drawn By	LEO/NW
Scale	AS NOTED

Sheet Title
SPECIFICATIONS

Sheet No.
002

COPYRIGHT, 2019 GTM ARCHITECTS, INC.

DOOR SCHEDULE

DOOR				FRAME					HARDWARE	REMARKS
NO.	SIZE	MATERIAL	MANUF.	MAT:	FIN:	HEAD	JAMB	SILL		
BASEMENT										
1	2^{6} x 6^{8}	TEMPERED GLASS	T.B.D						H-2	
2	2^{6} x 6^{8}	SOLID CORE MASONITE	T.B.D						H-2	
3	2^{6} x 6^{8}	SOLID CORE MASONITE	T.B.D.						H-3	
4	1 PAIR 2^{6} x 6^{8}	SOLID CORE MASONITE	T.B.D						H-5	
5	2^{4} x 6^{8}	SOLID CORE MASONITE	T.B.D.						H-5	
6	2^{4} x 6^{8}	SOLID CORE MASONITE	T.B.D.						H-5	
7	2^{6} x 6^{8}	SOLID CORE MASONITE	T.B.D.						H-4	
FIRST FLOOR										
8	3^{0} x 8^{0}	WOOD & GLASS	T.B.D						H-2	PAINT GRADE W/ 18" TEMPERED SIDELIGHTS
9	1 PAIR 1^{6} x 8^{0}	SOLID CORE MASONITE	T.B.D.						H-5	
10	2^{4} x 8^{0}	SOLID CORE MASONITE	T.B.D.						H-3	
11	2^{4} x 8^{0}	SOLID CORE MASONITE	T.B.D.						H-4	
12	2^{6} x 8^{0}	SOLID CORE MASONITE	T.B.D						H-4	
13	1 PAIR 2^{4} x 8^{0}	SOLID CORE MASONITE	T.B.D.						H-5	
14	2^{8} x 8^{0}	WOOD & GLASS	T.B.D.						H-2	
15	3^{0} x 8^{0}	WOOD & GLASS	T.B.D.						H-2	
16	15^{10} x 8^{0}	WOOD & GLASS	T.B.D.						H-2	
SECOND FLOOR										
17	2^{6} x 7^{0}	SOLID CORE MASONITE	T.B.D						H-3	
18	1 PAIR 1^{6} x 7^{0}	SOLID CORE MASONITE	T.B.D.						H-5	
19	2^{4} x 7^{0}	TEMPERED GLASS	T.B.D.						-	TEMPERED GLASS SHOWER DOOR
20	2^{4} x 7^{0}	SOLID CORE MASONITE	T.B.D.						H-3	
21	2^{4} x 7^{0}	SOLID CORE MASONITE	T.B.D						H-4	
22	2^{4} x 7^{0}	SOLID CORE MASONITE	T.B.D.						H-4	
23	2^{8} x 7^{0}	SOLID CORE MASONITE	T.B.D						H-4	
24	2^{6} x 7^{0}	SOLID CORE MASONITE	T.B.D.						H-3	
25	1 PAIR 2^{0} x 7^{0}	SOLID CORE MASONITE	T.B.D.						H-5	
26	2^{4} x 7^{0}	SOLID CORE MASONITE	T.B.D						H-3	
27	1^{6} x 7^{0}	SOLID CORE MASONITE	T.B.D.						H-5	
28	2^{6} x 7^{0}	SOLID CORE MASONITE	T.B.D.						H-3	
29	1 PAIR 2^{0} x 7^{0}	SOLID CORE MASONITE	T.B.D						H-5	
30	2^{4} x 7^{0}	SOLID CORE MASONITE	T.B.D						H-3	
31	2^{4} x 7^{0}	SOLID CORE MASONITE	T.B.D						H-3	
32	2^{6} x 7^{0}	SOLID CORE MASONITE	T.B.D						H-3	
33	1 PAIR 2^{0} x 7^{0}	SOLID CORE MASONITE	T.B.D						H-5	
34	2^{8} x 7^{0}	SOLID CORE MASONITE	T.B.D						H-3	
THIRD FLOOR										
35	2^{6} x 6^{8}	SOLID CORE MASONITE	T.B.D						H-4	
36	2^{6} x 6^{8}	SOLID CORE MASONITE	T.B.D						H-4	
37	2^{6} x 6^{8}	SOLID CORE MASONITE	T.B.D						H-3	
38	2^{0} x 6^{8}	TEMPERED GLASS	T.B.D.						-	TEMPERED GLASS SHOWER DOOR
39	1 PAIR 2^{0} x 6^{8}	SOLID CORE MASONITE	T.B.D.						H-5	

HARDWARE SCHEDULE

NOTE: ALL HARDWARE TO BE BY SCHLAGE OR APPROVED EQUAL. (EXCEPT FRENCH DOORS, WHICH ARE TO HAVE STANDARD HARDWARE BY DOOR MANUF.)

H-1	DOUBLE CYLINDER ENTRANCE LOCK, DEADBOLT
H-2	MULTI-POINT LEVER SET BY WINDOW/DOOR MANUF.
H-3	BATH/BEDROOM PRIVACY LOCK
H-4	PASSAGE SET
H-5	BALL CATCHES $ DUMMY KNOBS
H-6	POCKET DOOR HARDWARE
H-7	FRENCH DOOR PRIVACY LOCK-FLUSH BOLT/DUMMY HANDSET COMBO

GENERAL DOOR NOTES:

1. CONFIRM HARDWARE SELECTION WITH OWNER PRIOR TO ORDERING.
2. INTERIOR DOORS TO BE SOLID CORE.
3. DOORS W/ SIDELITES SHALL HAVE 2-2x6 SPACERS BETWEEN UNLESS SHOWN OTHERWISE
4. PROVIDE SAFETY GLASS AT ALL EXTERIOR FRENCH DOORS, PER CODE
5. PROVIDE CHARCOAL SCREENING @ SCREEN DOORS
6. CONNECT GARAGE DOOR TO ALARM SYSTEM PER OWNER

GENERAL NOTES

1. ALL WINDOWS TO HAVE SCREENS (SCREEN FRAMES COLOR T.B.S.).
2. ALL WINDOWS TO BE ALUMINUM CLAD EXTERIOR, PRE-PRIMED INTERIOR.
3. CONFIRM HARDWARE FINISH W/ ARCHITECT & OWNER PRIOR TO ORDER.
4. ALL GLAZING TO BE DOUBLE PANED, LOW E, CLEAR INSULATED.
5. CONFIRM OVERALL WINDOW SCHEDULE W/ ARCHITECT PRIOR TO ORDER.
6. ALL WINDOWS & GLASS DOORS TO BE SIMULATED DIVIDED LITE, 7/8" MUNTIN.. SEE ELEVATIONS FOR MUNTIN CONFIGURATIONS
7. PROVIDE WHITE JAMB LINERS.
8. ALL EXTERIOR TRIM FOR FRAME WALL UNITS TO BE AZEK PROVIDED & INSTALLED BY G.C.
9. GANGED WINDOWS SHALL 3-2x4 SPACERS BETWEEN UNLESS SHOWN OTHERWISE
10. PROVIDE EGRESS HARDWARE IN EGRESS WINDOWS AS REQUIRED.
11. SEE ELEVATIONS FOR TYPICAL HEAD HEIGHTS ABOVE FINISHED SUBFLOOR
12. PROVIDE SAFETY GLASS AT ENTRIES, STAIRS, OVER BATHTUBS & ELSEWHERE AS REQUIRED BY CODE.

DOOR SCHEDULE, CONT'D.

DETACHED GARAGE										
40	2^{8} x 8^{0}	WOOD & GLASS	T.B.D						H-2	
41	2^{6} x 8^{0}	WOOD & GLASS	T.B.D						H-2	
42	1 PAIR 2^{0} x 8^{0}	THERMA TRU	T.B.D						H-2	
43	8^{2} x 8^{0}	WOOD & GLASS	ARTISAN OR EQ.						PER. MANUF.	
44	8^{2} x 8^{0}	WOOD & GLASS	ARTISAN OR EQ.						PER. MANUF.	
45	2^{4} x 6^{8}	SOLID CORE MASONITE							H-3	
46	1 PAIR 2^{0} x 6^{8}	SOLID CORE MASONITE							H-5	
47	2^{4} x 6^{8}	SOLID CORE MASONITE							H-4	

WINDOW SCHEDULE (DETACHED GARAGE)

400	CASEMENT	JELDWEN SITELINE	SCC3048	30 3/4"x 48 3/4"	INSULATED	SEE ELEVS. FOR GRILLE PATTERN	
401	DOUBLE HUNG	JELDWEN SITELINE	SCD3148	32 1/8"x 48 3/4"	INSULATED	SEE ELEVS. FOR GRILLE PATTERN	
402	CASEMENT	JELDWEN SITELINE	SCC3048	30 3/4"x 48 3/4"	INSULATED	SEE ELEVS. FOR GRILLE PATTERN	
403	CASEMENT	JELDWEN SITELINE	SCC3248	32 3/4"x 48 3/4"	INSULATED	SEE ELEVS. FOR GRILLE PATTERN	
404	DOUBLE HUNG	JELDWEN SITELINE	SCD3364	34 1/8"x 64 3/4"	INSULATED	SEE ELEVS. FOR GRILLE PATTERN	
405	CASEMENT	JELDWEN SITELINE	SCC3048	30 3/4"x 48 3/4"	INSULATED	SEE ELEVS. FOR GRILLE PATTERN	
406	CASEMENT	JELDWEN SITELINE	SCC3048	30 3/4"x 48 3/4"	INSULATED	SEE ELEVS. FOR GRILLE PATTERN	
407	CASEMENT	JELDWEN SITELINE	SCC3248	32 3/4"x 48 3/4"	INSULATED	SEE ELEVS. FOR GRILLE PATTERN	
408	DOUBLE HUNG	JELDWEN SITELINE	SCD3364	34 1/8"x 64 3/4"	INSULATED	SEE ELEVS. FOR GRILLE PATTERN	
409	DOUBLE HUNG	JELDWEN SITELINE	SCD3364	34 1/8"x 64 3/4"	INSULATED	SEE ELEVS. FOR GRILLE PATTERN	

WINDOW SCHEDULE (BASEMENT)

#	TYPE	MANUFACTURER	CAT. NO.	ROUGH OPNG.	GLASS	REMARKS	
001	DOUBLE HUNG	JELDWEN SITELINE	SCD3760	38 1/8" x 60 3/4"	INSULATED	SEE ELEVS. FOR GRILLE PATTERN	TEMPERED UNIT

WINDOW SCHEDULE (FIRST FLOOR)

100	DOUBLE HUNG	JELDWEN SITELINE	SCD3364	34 1/8" x 64 3/4"	INSULATED	SEE ELEVS. FOR GRILLE PATTERN	
101	DOUBLE HUNG	JELDWEN SITELINE	SCD3372	34 1/8" x 72 3/4"	INSULATED	SEE ELEVS. FOR GRILLE PATTERN	
102	DOUBLE HUNG	JELDWEN SITELINE	SCD3372	34 1/8" x 72 3/4"	INSULATED	SEE ELEVS. FOR GRILLE PATTERN	
103	DOUBLE HUNG	JELDWEN SITELINE	SCD3372	34 1/8" x 72 3/4"	INSULATED	SEE ELEVS. FOR GRILLE PATTERN	
104	DOUBLE HUNG	JELDWEN SITELINE	SCD3772	38 1/8" x 72 3/4"	INSULATED	SEE ELEVS. FOR GRILLE PATTERN	
105	DOUBLE HUNG	JELDWEN SITELINE	SCD3772	38 1/8" x 72 3/4"	INSULATED	SEE ELEVS. FOR GRILLE PATTERN	
106	DOUBLE HUNG	JELDWEN SITELINE	SCD3372	34 1/8" x 72 3/4"	INSULATED	SEE ELEVS. FOR GRILLE PATTERN	
107	DOUBLE HUNG	JELDWEN SITELINE	SCD3372	34 1/8" x 72 3/4"	INSULATED	SEE ELEVS. FOR GRILLE PATTERN	
108	DOUBLE HUNG	JELDWEN SITELINE	SCD3372	34 1/8" x 72 3/4"	INSULATED	SEE ELEVS. FOR GRILLE PATTERN	
109	DOUBLE HUNG	JELDWEN SITELINE	SCD3364	34 1/8" x 64 3/4"	INSULATED	SEE ELEVS. FOR GRILLE PATTERN	
110	DOUBLE HUNG	JELDWEN SITELINE	SCD3364	34 1/8" x 64 3/4"	INSULATED	SEE ELEVS. FOR GRILLE PATTERN	
111	DOUBLE HUNG	JELDWEN SITELINE	SCD3772	38 1/8" x 72 3/4"	INSULATED	SEE ELEVS. FOR GRILLE PATTERN	
112	DOUBLE HUNG	JELDWEN SITELINE	SCD3772	38 1/8" x 72 3/4"	INSULATED	SEE ELEVS. FOR GRILLE PATTERN	
113	DOUBLE HUNG	JELDWEN SITELINE	SCD3772	38 1/8" x 72 3/4"	INSULATED	SEE ELEVS. FOR GRILLE PATTERN	
114	CASEMENT	JELDWEN SITELINE	SCC3248	32 3/4" x 48 3/4"	INSULATED	SEE ELEVS. FOR GRILLE PATTERN	
115	CASEMENT	JELDWEN SITELINE	SCC3248	32 3/4" x 48 3/4"	INSULATED	SEE ELEVS. FOR GRILLE PATTERN	
116	DOUBLE HUNG	JELDWEN SITELINE	SCD3772	38 1/8" x 72 3/4"	INSULATED	SEE ELEVS. FOR GRILLE PATTERN	
117	DOUBLE HUNG	JELDWEN SITELINE	SCD3772	38 1/8" x 72 3/4"	INSULATED	SEE ELEVS. FOR GRILLE PATTERN	

WINDOW SCHEDULE (SECOND FLOOR)

200	DOUBLE HUNG	JELDWEN SITELINE	SCD3364	34 1/8" x 64 3/4"	INSULATED	SEE ELEVS. FOR GRILLE PATTERN	EGRESS UNIT
201	DOUBLE HUNG	JELDWEN SITELINE	SCD3364	34 1/8" x 64 3/4"	INSULATED	SEE ELEVS. FOR GRILLE PATTERN	EGRESS UNIT
202	DOUBLE HUNG	JELDWEN SITELINE	SCD3760	38 1/8" x 60 3/4"	INSULATED	SEE ELEVS. FOR GRILLE PATTERN	EGRESS UNIT
203	DOUBLE HUNG	JELDWEN SITELINE	SCD3760	38 1/8" x 60 3/4"	INSULATED	SEE ELEVS. FOR GRILLE PATTERN	EGRESS UNIT
204	DOUBLE HUNG	JELDWEN SITELINE	SCD3760	38 1/8" x 60 3/4"	INSULATED	SEE ELEVS. FOR GRILLE PATTERN	EGRESS UNIT
205	AWNING	JELDWEN SITELINE	SCA3230	32 3/4" x 30 3/4"	INSULATED	SEE ELEVS. FOR GRILLE PATTERN	
206	AWNING	JELDWEN SITELINE	SCA3230	32 3/4" x 30 3/4"	INSULATED	SEE ELEVS. FOR GRILLE PATTERN	
207	AWNING	JELDWEN SITELINE	SCA3230	32 3/4" x 30 3/4"	INSULATED	SEE ELEVS. FOR GRILLE PATTERN	
208	AWNING	JELDWEN SITELINE	SCA3230	32 3/4" x 30 3/4"	INSULATED	SEE ELEVS. FOR GRILLE PATTERN	
209	DOUBLE HUNG	JELDWEN SITELINE	SCD3760	38 1/8" x 60 3/4"	INSULATED	SEE ELEVS. FOR GRILLE PATTERN	
210	DOUBLE HUNG	JELDWEN SITELINE	SCD3760	38 1/8" x 60 3/4"	INSULATED	SEE ELEVS. FOR GRILLE PATTERN	
211	DOUBLE HUNG	JELDWEN SITELINE	SCD3760	38 1/8" x 60 3/4"	INSULATED	SEE ELEVS. FOR GRILLE PATTERN	
212	DOUBLE HUNG	JELDWEN SITELINE	SCD3760	38 1/8" x 60 3/4"	INSULATED	SEE ELEVS. FOR GRILLE PATTERN	
213	DOUBLE HUNG	JELDWEN SITELINE	SCD3364	34 1/8" x 64 3/4"	INSULATED	SEE ELEVS. FOR GRILLE PATTERN	
214	DOUBLE HUNG	JELDWEN SITELINE	SCD3364	34 1/8" x 64 3/4"	INSULATED	SEE ELEVS. FOR GRILLE PATTERN	
215	DOUBLE HUNG	JELDWEN SITELINE	SCD3364	34 1/8" x 64 3/4"	INSULATED	SEE ELEVS. FOR GRILLE PATTERN	
216	DOUBLE HUNG	JELDWEN SITELINE	SCD3760	38 1/8" x 60 3/4"	INSULATED	SEE ELEVS. FOR GRILLE PATTERN	
217	DOUBLE HUNG	JELDWEN SITELINE	SCD3760	38 1/8" x 60 3/4"	INSULATED	SEE ELEVS. FOR GRILLE PATTERN	

WINDOW SCHEDULE (ATTIC)

300	CASEMENT	JELDWEN SITELINE	SCC3048	30 3/4"x 48 3/4"	INSULATED	SEE ELEVS. FOR GRILLE PATTERN	
301	CASEMENT	JELDWEN SITELINE	SCC3048	30 3/4"x 48 3/4"	INSULATED	SEE ELEVS. FOR GRILLE PATTERN	
302	CASEMENT	JELDWEN SITELINE	SCC3048	30 3/4"x 48 3/4"	INSULATED	SEE ELEVS. FOR GRILLE PATTERN	

FILE NAME:

REVIEWED
By Michael Kyne at 2:21 pm, May 23, 2022

APPROVED
Montgomery County
Historic Preservation Commission

GTM ARCHITECTS

7735 OLD GEORGETOWN ROAD
SUITE 700
BETHESDA, MD 20814
(240)333-2000
(240)333-2001 FAX
WWW.GTMARCHITECTS.COM

Seal

I certify that these documents were prepared or approved by me, and that I am a duly licensed architect under the laws of the State of Maryland, license number 8385, Expiration Date: 12-06-2022.

Consultant

Project
19 HIGH ST
LOT 4

Owner

Developer

Issue Description	*Date*
PERMIT SET	04/11/2022

GTM Project No.	18.0320
Checked By	GTM
Drawn By	LEO/NW
Scale	AS NOTED

Sheet Title

DOOR & WINDOW SCHEDULES

Sheet No.

003

COPYRIGHT, 2019 GTM ARCHITECTS, INC.

GENERAL NOTES

1. Boundary information and two-foot contour data within noted "Limits of Topographic Survey" are based upon surveys performed by CAS Engineering, dated July, 2018.
2. The location of offsite trees, improvements and other structures beyond noted "Limits of Topographic Survey" are approximate. Offsite features are shown per available MNCPPC topographic records and are provided for illustrative purposes only.
3. Total lot area: Lot 4 =133,830.62 sq. ft. (3.072 ac.)
4. Property is located on Tax Map HU562 and WSSC 200' Sheet 227NW03.
5. Property is located on Montgomery County soils survey map number 14. Soil type(s): 1B, 1C, 6A & 16D. [Gaila silt loam, Baile silt loam & Brinklow-Blocktown channery silt loams] Hydrologic Soil Group "B" "C" & "D".
6. Flood zone "X" per F.E.M.A. Firm Maps, Community Panel Number 24031C0216D.
7. Property is located in the Hawlings River - Reddy Branch Watershed.
8. Water Category - 3, Sewer Category - 3
9. Local utilities include:
   Water / Sewer - Washington Suburban Sanitary Commission
   Electric - PEPCO
   Telephone - Verizon
   Gas - Washington Gas
10. Parcel 770 is located in the Town of Brookeville and the Brookeville Historic District.
11. This plan was created without the benefit of a title report.

TOWN OF BROOKEVILLE ZONING DATA

1. Zoning: Historic Village Residential (HVR)

Minimum Lot Area = 10,000 sq. ft.	Front B.R.L. = 15 ft.
Minimum Lot Width at R/W = 25 ft.	Rear B.R.L. = 40 ft. / 2 ft. (Accessory Structures)
Minimum Lot Width at B.R.L. = N/A	Side B.R.L. = 8 ft. / 2 ft. (Accessory Structures)

2. Verify main building height in accordance with the Town of Brookeville Zoning Ordinance.

Height of building from FF to highest point:	32.35 ft (32'-4 1/4" Per Arch.)
First floor elevation	434.60 ft
Height of building to highest point	32.35 ft
Elevation @ highest point	466.95 ft
Average elevation along front of building	432.23 ft

Height of building at highest point = 466.95 - 432.23 = 34.72 feet
Allowable height of building = 35 feet

Proposed height of building to highest point = 34.72

3. Verify accessory building height in accordance with the Town of Brookeville Zoning Ordinance.

Height of building from FF to highest point:	22.02 ft (22'-0 1/4" Per Arch.)
First floor elevation	432.60 ft
Height of accessory building to highest point	22.02 ft
Elevation @ highest point	454.62 ft
Average elevation along front of building	428.20 ft

Height of accessory building at highest point = 454.62 - 428.20 = 26.42 feet
Allowable height of accessory building = 35 feet

Proposed height of accessory building to highest point = 26.42 feet

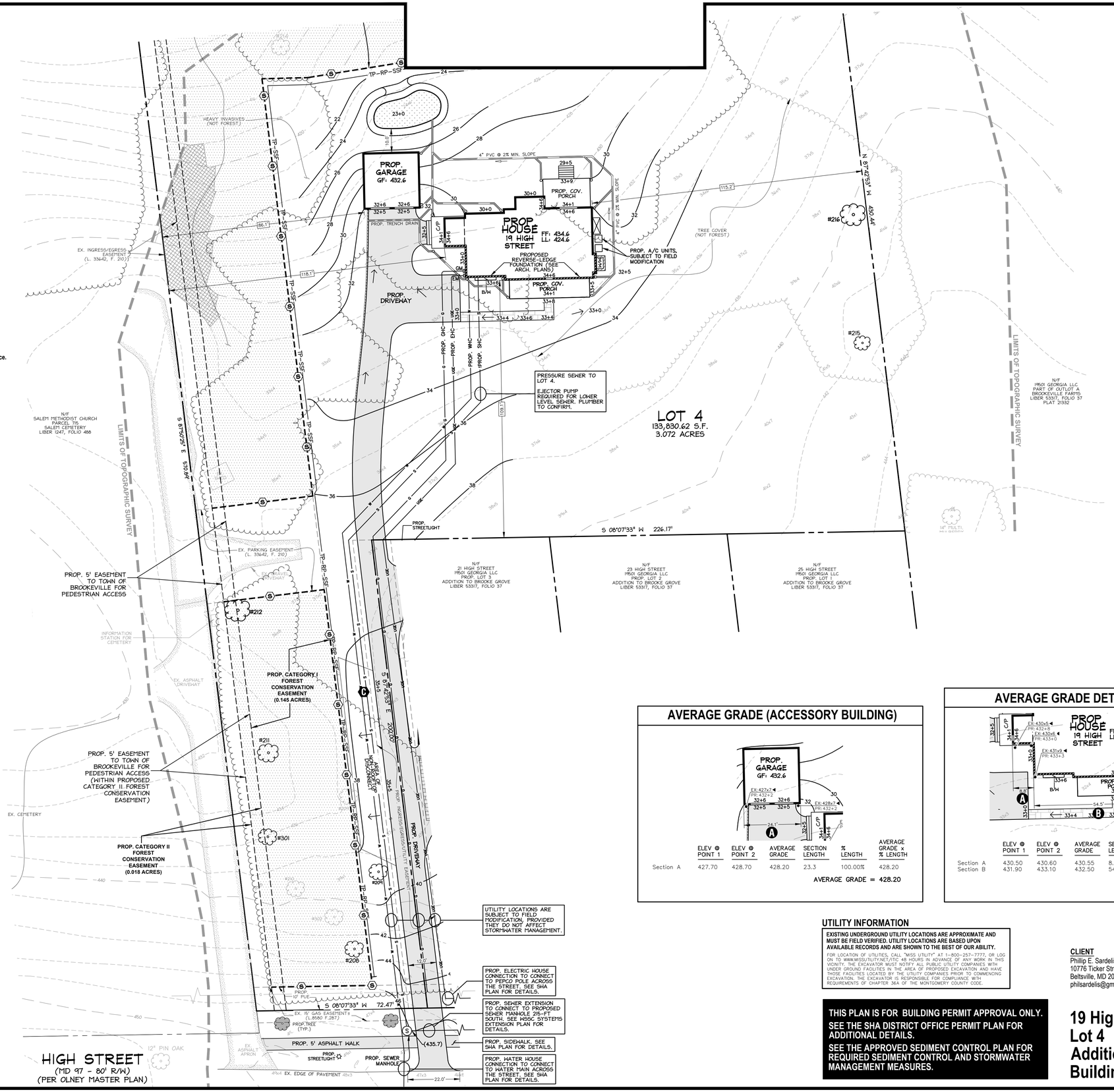

LEGEND

EXISTING FEATURES

- Ex. Sewer Manhole and Invert
- Ex. Water Line with Valve
- Ex. Gas Line with Valve
- Ex. Overhead Utility with Pole
- Ex. Two- And Ten-foot Contours
- Ex. Spot Elevation
- Ex. Canopy Line
- Ex. Tree
- Ex. Specimen Tree (DBH ≥ 30")
- Ex. Significant Tree (DBH ≥ 24")
- Ex. Tree (To Be Removed)

PROPOSED FEATURES

- Prop. Water-House Connection
- Prop. Sewer-House Connection
- Prop. Gas-House Connection
- Prop. Electric-House Connection
- Prop. Contour with Elevation
- Prop. Spot Elevation
- Prop. Surface Flow Direction
- Prop. Tree
- Prop. Streetlight

AVERAGE GRADE (ACCESSORY BUILDING)

	ELEV @ POINT 1	ELEV @ POINT 2	AVERAGE GRADE	SECTION LENGTH	% LENGTH	AVERAGE GRADE x % LENGTH
Section A	427.70	428.70	428.20	23.3	100.00%	428.20

AVERAGE GRADE = 428.20

AVERAGE GRADE DETERMINATION

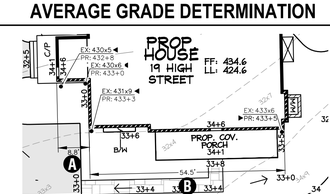

	ELEV @ POINT 1	ELEV @ POINT 2	AVERAGE GRADE	SECTION LENGTH	% LENGTH	AVERAGE GRADE x % LENGTH
Section A	430.50	430.60	430.55	8.8	13.90%	59.85
Section B	431.90	433.10	432.50	54.5	86.10%	372.38

AVERAGE GRADE = 432.23

UTILITY INFORMATION

EXISTING UNDERGROUND UTILITY LOCATIONS ARE APPROXIMATE AND MUST BE FIELD VERIFIED. UTILITY LOCATIONS ARE BASED UPON AVAILABLE RECORDS AND ARE SHOWN TO THE BEST OF OUR ABILITY.

FOR LOCATION OF UTILITIES, CALL "MISS UTILITY" AT 1-800-257-7777, OR LOG ON TO WWW.MISSUTILITY.NET/ITC 48 HOURS IN ADVANCE OF ANY WORK IN THIS VICINITY. THE EXCAVATOR MUST NOTIFY ALL PUBLIC UTILITY COMPANIES WITH UNDER GROUND FACILITIES IN THE AREA OF PROPOSED EXCAVATION AND HAVE THOSE FACILITIES LOCATED BY THE UTILITY COMPANIES PRIOR TO COMMENCING EXCAVATION. THE EXCAVATOR IS RESPONSIBLE FOR COMPLIANCE WITH REQUIREMENTS OF CHAPTER 36A OF THE MONTGOMERY COUNTY CODE.

THIS PLAN IS FOR BUILDING PERMIT APPROVAL ONLY.
SEE THE SHA DISTRICT OFFICE PERMIT PLAN FOR ADDITIONAL DETAILS.
SEE THE APPROVED SEDIMENT CONTROL PLAN FOR REQUIRED SEDIMENT CONTROL AND STORMWATER MANAGEMENT MEASURES.

CLIENT
Phillip E. Sardelis
10776 Ticker Street
Beltsville, MD 20705
philsardelis@gmail.com

ARCHITECT
GTM Architects
Attn: Luke Olson
7735 Old Georgetown Road, Suite 700
Bethesda, MD 20814
(240) 333-2021 Phone
lolson@gtmarchitects.com

19 High Street
Lot 4
Addition to Brooke Grove
Building Permit Site Plan

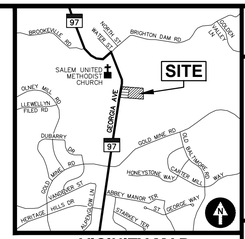

VICINITY MAP
ADC MAP 5050, GRID A-3, SCALE: 1" = 2000'

CAS JOB NO.:	16-579B
DATE:	04/2022

DATE	REVISION
04/01/22	SMF: Building Permit Site Plan to Arch for coordination.

REVIEWED
By Michael Kyne at 2:21 pm, May 23, 2022

APPROVED
Montgomery County
Historic Preservation Commission

Lot 4, Addition to Brooke Grove
Plat Pending
Olney (8th) Election District, Montgomery County, MD

19 High Street
Brookeville, Maryland 20833

CAS ENGINEERING-MD
10 South Bentz Street
Frederick, Maryland 21701
301-607-8031 Phone
info@casengineering.com
www.casengineering.com

CAS ENGINEERING-DC, LLC
4836 MacArthur Boulevard, NW, 2nd Floor
Washington, DC 20007
202-393-7200 Phone
info@cas-dc.com
www.cas-dc.com

0 10 20 30 40
SCALE: 1 INCH = 20 FEET

SHEET TITLE:
Building Permit Site Plan

P:\2016\165798__23 High Street_Parcel 770\6 drawings\165579_BPSP_SCP_SWM.dwg, 4/1/2022 10:16:08 AM, smf, © 2022 CAS Engineering and CAS Engineering-DC, LLC

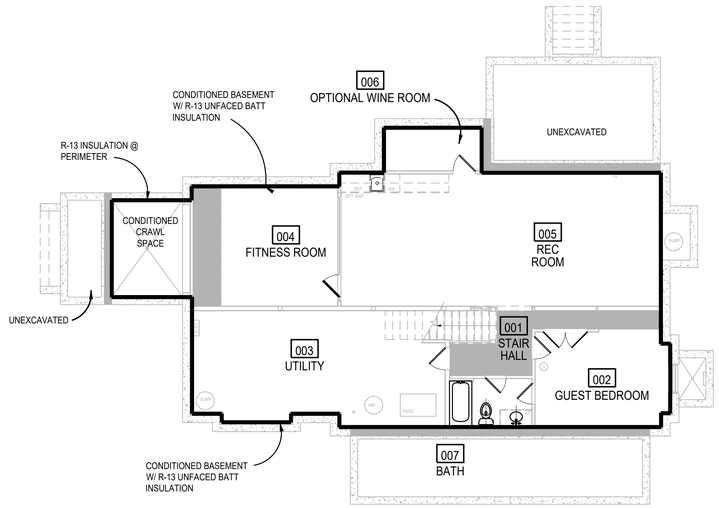

1 BASEMENT THERMAL ENVELOPE PLAN
SCALE: 1/8"=1'=0

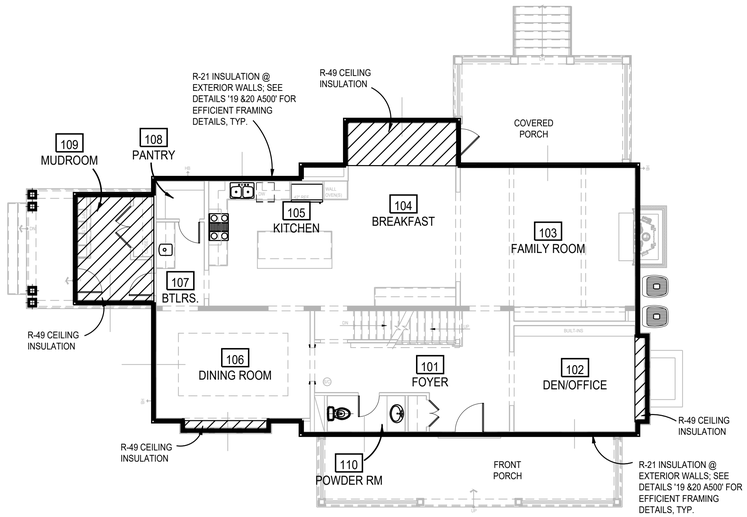

2 FIRST FLOOR THERMAL ENVELOPE PLAN
SCALE: 1/8"=1'=0

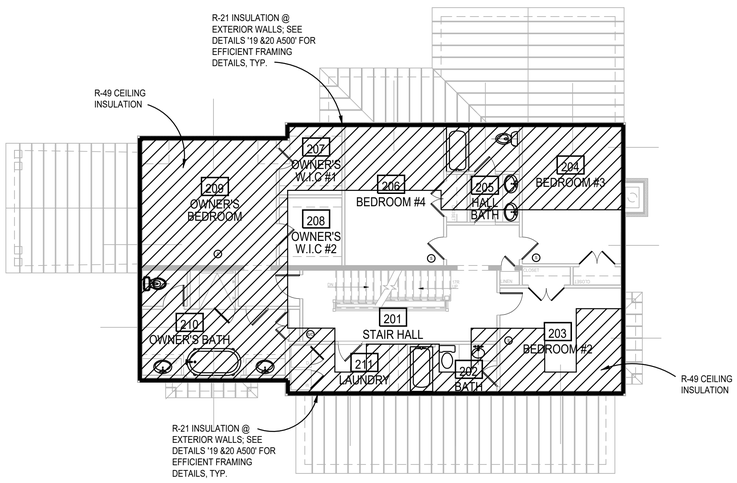

3 SECOND FLOOR THERMAL ENVELOPE PLAN
SCALE: 1/8"=1'=0

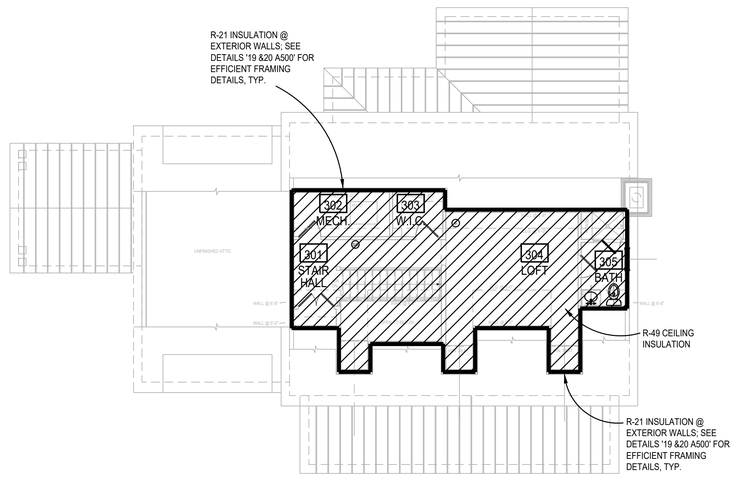

4 LOFT THERMAL ENVELOPE PLAN
SCALE: 1/8"=1'=0

WINDOW/DOORS THERMAL DATA

THERMAL PERFORMACE DATA FOR DOORS & WINDOWS		
OPENING TYPE	U-VALUE	SHGC
CASEMENT WINDOWS	0.29	0.18
DOUBLE HUNG WINDOWS	0.30	0.18
SLIDING DOORS	0.28	0.19
EXTERIOR INSWINGING DOORS	0.29	0.16
OUT SWINGING PATIO DOORS	0.29	0.16
AWNING WINDOWS	0.29	0.18

THE AREA-WEIGHTED AVERAGE MAXIMUM FENESTRATION U-FACTOR PERMITTED USING TRADE-OFFS FROM SECTION 402.1 IN ZONE 4 SHALL BE .35 FOR VERTICAL FENESTRATION AND .55 FOR SKYLITES

ENERGY CONSERVATION NOTES

1. The following provisions for thermal resistance meet or exceed the requirements stipulated by the International Energy Conservation Code.
2. INSULATION: IRC

CEILING (OF UPPERMOST STORY)	R-49 W/ 500SF R-30 ALLOWANCE, OR R-38 CONTINUOUS
VAULTED CEILING	R-38
EXTERIOR FRAME WALLS	R-20 OR 13+5 (EXTERIOR)
RIM JOISTS	EQUAL TO WALL BELOW
FLOORS OVER UNHEATED SPACES (INCLUDING FLOOR OVERHANGS)	R-38
MASONRY WALLS (ENCLOSED HEATED LIVING AREAS)	R-13 OR R-10 CONTINUOUS
SLAB ON GRADE (HEATED SPACE) 24" PERIMETER INSULATION	R-10
WINDOWS	0.35 U FACTOR, 0.40 SHGC
DOORS	SEE SECTION R402.3.4

*ALL VALUES ARE TYPICAL UNLESS NOTED OTHERWISE IN ARCHITECTURAL DRAWINGS

3. Air Infiltration:
A. Windows: not exceeding five tenths (0.5) CFM of sash crack.
B. Sliding Glass Doors: not exceeding five tenths (0.5) CFM per foot of door area.
C. Swinging Doors: not exceeding one and twenty-five hundredths (1.25) CFM per square foot of door area.
Provide 1" fiberglass sill sealer between foundation wall and all sill plates.
D. In order to seal between dissimilar materials to allow for differential expansion and contraction, the following shall be caulked, gasketed, weatherstripped or otherwise sealed with an air barrier material, suitable film or solid material:
1. All joints, seams, and penetrations
2. Site-built windows, doors, and skylites
3. Openings between window and door assemblies and their respective jambs & framing
4. Utility penetrations
5. Dropped ceilings or chases adjacent to the thermal envelope
6. Knee walls
7. Walls and ceilings separating a garage from conditioned spaces
8. Behind tubs and showers on exterior walls
9. Common walls between dwelling units
10. Attic access openings
11. Rim joist junction
12. Other sources of infiltration

HVAC SYSTEMS & WATER HEATING

1. HEATING & COOLING EQUIP. CONTROLS. AT LEAST ONE PRE-PROGRAMMED PROGRAMMABLE THERMOSTAT IS REQUIRED WHEN USING A FORCED AIR SYSTEM. SEPARATE THERMOSTATS ARE REQUIRED FOR EACH HEATING/COOLING ZONE IN THE DWELLING.

2. DUCT INSULATION. SUPPLY DUCTS LOCATED OUTSIDE THE BUILDING THERMAL ENVELOPE SHALL BE INSULATED TO MINIMUM R-8, ALL OTHER DUCTS INSULATED TO A MINIMUM OF R-6

3. DUCT SEALING. ALL DUCTS, AIR HANDLERS, FILTER BOXES, & BUILDING CAVITIES MUST BE SEALED. JOINTS & SEAMS SHALL COMPLY W/ M1606.4.1 IRC

4. MECHANICAL SYSTEM PIPING INSULATION. R-3 FOR PIPING CARRYING FLUIDS AT >105°F OR <55°F IS REQUIRED

5. MECHANICAL VENTILATION. OUTDOOR AIR INTAKES OR EXHAUSTS SHALL HAVE DAMPERS

6. SERVICE WATER HEATING. PIPING IN THE CIRCULATING HOT WALTER SYSTEM SHALL BE INSULATED TO AN R-3 AND SYSTEM TO INCLUDE MANUAL OR AUTOMATIC SWITCH THAT CAN TURN OFF THE SYSTEM WHEN IT IS NOT USED, WATER HEATERS WITH PIPE RISERS SHALL HAVE HEAT TRAPS ON BOTH INLET AND OUTLET OF WATER HEATER UNLESS THE WATER HEATER HAS INTEGRAL HEAT TRAPS OR IS PART OF A CIRCULATION SYSTEM. TYPICAL METHODS USED FOR CREATING HEAT TRAPS ARE "U" OR "RAMS HORN" BENDS IN THE FLEXIBLE PIPE CONNECTORS OR INSTALLING AFTERMARKET PIPE NIPPLES WITH INTEGRAL TRAPS.

7. EQUIPMENT SIZING. HEATING AND COOLING EQUIPMENT SHALL BE SIZED BASED ON BUILDING LOADS CALCULATED IN ACCORDANCE WITH ACCA (AIR CONDITIONING CONTRACTORS OF AMERICA) MANUAL-J, A SIMPLIFIED METHOD OF CALCULATING HEATING AND COOLING LOADS. THE MANUAL-J CALCULATIONS SHALL BE SUBMITTED UPON APPLICATION FOR THE MECHANICAL PERMIT.

SECTION 302.1 OF IECC SPECIFIES THE INTERIOR DESIGN TEMPERATURES USED FOR HEATING AND COOLING LOAD CALCULATIONS AS MAXIMUM OF 72°F FOR HEATINGAND MINIMUM 75°F FOR COOLING.

LEGEND

INSULATION PERIMETER

AREA OF INSULATION ABOVE OR BELOW AS INDICATED

REVIEWED
By Michael Kyne at 2:21 pm, May 23, 2022

APPROVED
Montgomery County
Historic Preservation Commission

GTM ARCHITECTS
7735 OLD GEORGETOWN ROAD
SUITE 700
BETHESDA, MD 20814
(240)333-2000
(240)333-2001 FAX
WWW.GTMARCHITECTS.COM

Seal

I certify that these documents were prepared or approved by me, and that I am a duly licensed architect under the laws of the State of Maryland, license number 8886, Expiration Date: 12/06/2022.

Consultant

Project
19 HIGH ST
LOT 4

Owner

Developer

PERMIT SET	04/11/2022
Issue Description	*Date*

GTM Project No.	18.0320
Checked By	GTM
Drawn By	LEO/NW
Scale	AS NOTED

Sheet Title
THERMAL ENERGY DIAGRAMS

Sheet No.
EC001

COPYRIGHT, 2019 GTM ARCHITECTS, INC.

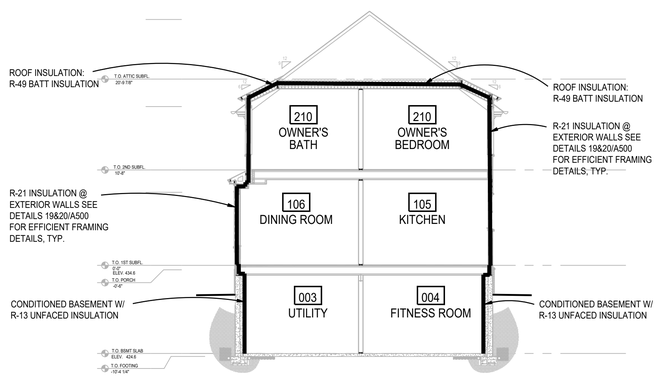

1 TYPICAL THERMAL ENVELOPE BUILDING SECTION

SCALE: 1/8"=1'=0

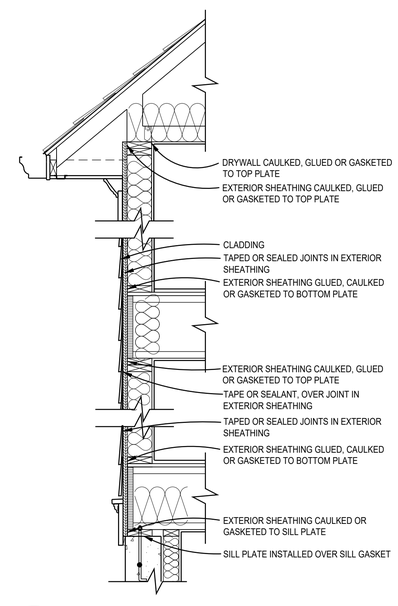

2 ENVELOPE AIR SEALING DETAIL

SCALE: 3/4"=1'-0"

*95 TOTAL SQ. FT. OF PROPOSED
R-38 CEILING/ATTIC INSULATION

500 SQ. FT ALLOWED PER IECC 402.2

WINDOW/DOORS THERMAL DATA

THERMAL PERFORMACE DATA FOR DOORS & WINDOWS		
OPENING TYPE	U-VALUE	SHGC
CASEMENT WINDOWS	0.29	0.18
DOUBLE HUNG WINDOWS	0.30	0.18
SLIDING DOORS	0.28	0.19
EXTERIOR INSWINGING DOORS	0.29	0.16
OUT SWINGING PATIO DOORS	0.29	0.16
AWNING WINDOWS	0.29	0.18

THE AREA-WEIGHTED AVERAGE MAXIMUM FENESTRATION U-FACTOR PERMITTED USING TRADE-OFFS FROM SECTION 402.1 IN ZONE 4 SHALL BE .35 FOR VERTICAL FENESTRATION AND .55 FOR SKYLITES

ENERGY CONSERVATION NOTES

1. The following provisions for thermal resistance meet or exceed the requirements stipulated by the International Energy Conservation Code.
2. INSULATION: IRC

CEILING (OF UPPERMOST STORY)	R-49 W/ 500SF R-30 ALLOWANCE, OR R-38 CONTINUOUS
VAULTED CEILING	R-38
EXTERIOR FRAME WALLS	R-20 OR 13+5 (EXTERIOR)
RIM JOISTS	EQUAL TO WALL BELOW
FLOORS OVER UNHEATED SPACES (INCLUDING FLOOR OVERHANGS)	R-38
MASONRY WALLS (ENCLOSED HEATED LIVING AREAS)	R-13 OR R-10 CONTINUOUS
SLAB ON GRADE (HEATED SPACE) 24" PERIMETER INSULATION	R-10
WINDOWS	0.35 U FACTOR, 0.40 SHGC
DOORS	SEE SECTION R402.3.4

*ALL VALUES ARE TYPICAL UNLESS NOTED OTHERWISE IN ARCHITECTURAL DRAWINGS

3. Air Infiltration:
A. Windows: not exceeding five tenths (0.5) CFM of sash crack.
B. Sliding Glass Doors: not exceeding five tenths (0.5) CFM per foot of door area.
C. Swinging Doors: not exceeding one and twenty-five hundredths (1.25) CFM per square foot of door area.
Provide 1" fiberglass sill sealer between foundation wall and all sill plates.
D. In order to seal between dissimilar materials to allow for differential expansion and contraction, the following shall be caulked, gasketed, weatherstripped or otherwise sealed with an air barrier material, suitable film or solid material:

1. All joints, seams, and penetrations
2. Site-built windows, doors, and skylites
3. Openings between window and door assemblies and their respective jambs & framing
4. Utility penetrations
5. Dropped ceilings or chases adjacent to the thermal envelope
6. Knee walls
7. Walls and ceilings separating a garage from conditioned spaces
8. Behind tubs and showers on exterior walls
9. Common walls between dwelling units
10. Attic access openings
11. Rim joist junction
12. Other sources of infiltration

HVAC SYSTEMS & WATER HEATING

1. HEATING & COOLING EQUIP. CONTROLS. AT LEAST ONE PRE-PROGRAMMED PROGRAMMABLE THERMOSTAT IS REQUIRED WHEN USING A FORCED AIR SYSTEM. SEPARATE THERMOSTATS ARE REQUIRED FOR EACH HEATING/COOLING ZONE IN THE DWELLING.

2. DUCT INSULATION. SUPPLY DUCTS LOCATED OUTSIDE THE BUILDING THERMAL ENVELOPE SHALL BE INSULATED TO MINIMUM R-8, ALL OTHER DUCTS INSULATED TO A MINIMUM OF R-6

3. DUCT SEALING. ALL DUCTS, AIR HANDLERS, FILTER BOXES, & BUILDING CAVITIES MUST BE SEALED. JOINTS & SEAMS SHALL COMPLY W/ M1606.4.1 IRC

4. MECHANICAL SYSTEM PIPING INSULATION. R-3 FOR PIPING CARRYING FLUIDS AT >105°F OR <55°F IS REQUIRED

5. MECHANICAL VENTILATION. OUTDOOR AIR INTAKES OR EXHAUSTS SHALL HAVE DAMPERS

6. SERVICE WATER HEATING. PIPING IN THE CIRCULATING HOT WALTER SYSTEM SHALL BE INSULATED TO AN R-3 AND SYSTEM TO INCLUDE MANUAL OR AUTOMATIC SWITCH THAT CAN TURN OFF THE SYSTEM WHEN IT IS NOT USED, WATER HEATERS WITH PIPE RISERS SHALL HAVE HEAT TRAPS ON BOTH INLET AND OUTLET OF WATER HEATER UNLESS THE WATER HEATER HAS INTEGRAL HEAT TRAPS OR IS PART OF A CIRCULATION SYSTEM. TYPICAL METHODS USED FOR CREATING HEAT TRAPS ARE "U" OR "RAMS HORN" BENDS IN THE FLEXIBLE PIPE CONNECTORS OR INSTALLING AFTERMARKET PIPE NIPPLES WITH INTEGRAL TRAPS.

7. EQUIPMENT SIZING. HEATING AND COOLING EQUIPMENT SHALL BE SIZED BASED ON BUILDING LOADS CALCULATED IN ACCORDANCE WITH ACCA (AIR CONDITIONING CONTRACTORS OF AMERICA) MANUAL-J, A SIMPLIFIED METHOD OF CALCULATING HEATING AND COOLING LOADS. THE MANUAL-J CALCULATIONS SHALL BE SUBMITTED UPON APPLICATION FOR THE MECHANICAL PERMIT.

SECTION 302.1 OF IECC SPECIFIES THE INTERIOR DESIGN TEMPERATURES USED FOR HEATING AND COOLING LOAD CALCULATIONS AS MAXIMUM OF 72°F FOR HEATINGAND MINIMUM 75°F FOR COOLING.

LEGEND

INSULATION PERIMETER

AREA OF INSULATION ABOVE OR BELOW AS INDICATED

REVIEWED
By Michael Kyne at 2:21 pm, May 23, 2022

APPROVED
Montgomery County
Historic Preservation Commission

GTM ARCHITECTS

7735 OLD GEORGETOWN ROAD
SUITE 700
BETHESDA, MD 20814
(240)333-2000
(240)333-2001 FAX
WWW.GTMARCHITECTS.COM

Seal

I certify that these documents were prepared or approved by me, and that I am a duly licensed architect under the laws of the State of Maryland, license number 8886, Expiration Date: 12/06/2022.

Consultant

Project
19 HIGH ST
LOT 4

Owner

Developer

Issue Description	Date
PERMIT SET	04/11/2022

GTM Project No.	18.0320
Checked By	GTM
Drawn By	LEO/NW
Scale	AS NOTED

Sheet Title
THERMAL ENERGY DIAGRAMS

Sheet No.
EC002

COPYRIGHT, 2019 GTM ARCHITECTS, INC.

FILE NAME:

5 4 3 2 1

Generated by REScheck-Web Software
Compliance Certificate

Project 18.0320_19 HIGH STREET_LOT 4

Energy Code:	**2018 IECC**
Location:	**Brookeville, Maryland**
Construction Type:	**Single-family**
Project Type:	**New Construction**
Conditioned Floor Area:	**1,940 ft2**
Glazing Area	**17%**
Climate Zone:	**4 (5093 HDD)**
Permit Date:	
Permit Number:	

Construction Site: Owner/Agent: Alabama Designer/Contractor: Alabama

Compliance: Passes using UA trade-off

Compliance: **4.4% Better Than Code** Maximum UA: **614** Your UA: **587** Maximum SHGC: **0.40** Your SHGC: **0.18**

The % Better or Worse Than Code Index reflects how close to compliance the house is based on code trade-off rules.
It DOES NOT provide an estimate of energy use or cost relative to a minimum-code home.

Slab-on-grade tradeoffs are no longer considered in the UA or performance compliance path in REScheck. Each slab-on-grade assembly in the specified climate zone must meet the minimum energy code insulation R-value and depth requirements.

Envelope Assemblies

Assembly	Gross Area or Perimeter	Cavity R-Value	Cont. R-Value	Prop. U-Factor	Req. U-Factor	Prop. UA	Req. UA
Ceiling: Flat Ceiling or Scissor Truss	1,816	49.0	0.0	0.026	0.026	47	47
Wall: Wood Frame, 16" o.c.	4,278	21.0	0.0	0.057	0.060	200	210
FRONT DOOR: Solid Door (under 50% glazing)	52			0.290	0.320	15	17
IN swing patio door: Glass Door (over 50% glazing) SHGC: 0.16	26			0.290	0.320	7	8
OUT swing patio door: Glass Door (over 50% glazing) SHGC: 0.16	26			0.290	0.320	7	8
sliding door: Glass Door (over 50% glazing) SHGC: 0.19	96			0.280	0.320	27	31
DOUBLE HUNG: Wood Frame SHGC: 0.18	495			0.300	0.320	148	158
CASEMENT: Wood Frame SHGC: 0.18	53			0.290	0.320	15	17
AWNING: Wood Frame SHGC: 0.18	30			0.290	0.320	9	9
Basement Wall: Solid Concrete or Masonry Wall height: 9.1' Depth below grade: 7.3' Insulation depth: 9.1'	1,735	13.0	0.0	0.060	0.059	104	102
Crawl Wall: Solid Concrete or Masonry Wall height: 5.9' Depth below grade: 4.6' Insulation depth: 5.9'	188	13.0	0.0	0.077	0.065	8	7

Compliance Statement: The proposed building design described here is consistent with the building plans, specifications, and other calculations submitted with the permit application. The proposed building has been designed to meet the 2018 IECC requirements in REScheck Version : REScheck-Web and to comply with the mandatory requirements listed in the REScheck Inspection Checklist.

Name - Title ____ Signature ____ Date ____

REScheck Software Version : REScheck-Web
Inspection Checklist

Energy Code: 2018 IECC

Requirements: 0.0% were addressed directly in the REScheck software

Text in the "Comments/Assumptions" column is provided by the user in the REScheck Requirements screen. For each requirement, the user certifies that a code requirement will be met and how that is documented, or that an exception is being claimed. Where compliance is itemized in a separate table, a reference to that table is provided.

Section # & Req.ID	Pre-Inspection/Plan Review	Plans Verified Value	Field Verified Value	Complies?	Comments/Assumptions
103.1, 103.2 [PR1][1]	Construction drawings and documentation demonstrate energy code compliance for the building envelope. Thermal envelope represented on construction documents.			☐Complies ☐Does Not ☐Not Observable ☐Not Applicable	
103.1, 103.2, 403.7 [PR3][1]	Construction drawings and documentation demonstrate energy code compliance for lighting and mechanical systems. Systems serving multiple dwelling units must demonstrate compliance with the IECC Commercial Provisions.			☐Complies ☐Does Not ☐Not Observable ☐Not Applicable	
302.1, 403.7 [PR2][2]	Heating and cooling equipment is sized per ACCA Manual S based on loads calculated per ACCA Manual J or other methods approved by the code official.	Heating: Btu/hr____ Cooling: Btu/hr____	Heating: Btu/hr____ Cooling: Btu/hr____	☐Complies ☐Does Not ☐Not Observable ☐Not Applicable	

Additional Comments/Assumptions:

1 High Impact (Tier 1) 2 Medium Impact (Tier 2) 3 Low Impact (Tier 3)

Section # & Req.ID	Foundation Inspection	Plans Verified Value	Field Verified Value	Complies?	Comments/Assumptions
402.1.1 [FO4][1]	Conditioned basement wall insulation R-value. Where interior insulation is used, verification may need to occur during Insulation Inspection. Not required in warm-humid locations in Climate Zone 3.	R-____ R-____	R-____ R-____	☐Complies ☐Does Not ☐Not Observable ☐Not Applicable	*See the Envelope Assemblies table for values.*
303.2 [FO5][1]	Conditioned basement wall insulation installed per manufacturer's instructions.			☐Complies ☐Does Not ☐Not Observable ☐Not Applicable	
402.2.9 [FO6][1]	Conditioned basement wall insulation depth of burial or distance from top of wall.	____ ft	____ ft	☐Complies ☐Does Not ☐Not Observable ☐Not Applicable	*See the Envelope Assemblies table for values.*
402.2.11 [FO7][1]	Unvented crawl space wall insulation R-value.	R-____ R-____	R-____ R-____	☐Complies ☐Does Not ☐Not Observable ☐Not Applicable	*See the Envelope Assemblies table for values.*
303.2 [FO8][1]	Unvented crawl space wall insulation installed per manufacturer's instructions.			☐Complies ☐Does Not ☐Not Observable ☐Not Applicable	
402.2.11 [FO9][1]	Unvented crawl space continuous vapor retarder installed over exposed earth, joints overlapped by 6 in. and sealed, extending at least 6 in. up and attached to the wall.			☐Complies ☐Does Not ☐Not Observable ☐Not Applicable	
402.2.11 [FO10][1]	Unvented crawl space wall insulation depth of burial or distance from top of wall.	____ in.	____ in.	☐Complies ☐Does Not ☐Not Observable ☐Not Applicable	*See the Envelope Assemblies table for values.*
303.2.1 [FO11][2]	A protective covering is installed to protect exposed exterior insulation and extends a minimum of 6 in. below grade.			☐Complies ☐Does Not ☐Not Observable ☐Not Applicable	
403.9 [FO12][2]	Snow- and ice-melting system controls installed.			☐Complies ☐Does Not ☐Not Observable ☐Not Applicable	

Additional Comments/Assumptions:

1 High Impact (Tier 1) 2 Medium Impact (Tier 2) 3 Low Impact (Tier 3)

Section # & Req.ID	Framing / Rough-In Inspection	Plans Verified Value	Field Verified Value	Complies?	Comments/Assumptions
402.1.1, 402.3.4 [FR1][1]	Door U-factor.	U-____	U-____	☐Complies ☐Does Not ☐Not Observable ☐Not Applicable	*See the Envelope Assemblies table for values.*
402.1.1, 402.3.1, 402.3.3, 402.5 [FR2][1]	Glazing U-factor (area-weighted average).	U-____	U-____	☐Complies ☐Does Not ☐Not Observable ☐Not Applicable	*See the Envelope Assemblies table for values.*
303.1.3 [FR4][1]	U-factors of fenestration products are determined in accordance with the NFRC test procedure or taken from the default table.			☐Complies ☐Does Not ☐Not Observable ☐Not Applicable	
402.4.1.1 [FR23][1]	Air barrier and thermal barrier installed per manufacturer's instructions.			☐Complies ☐Does Not ☐Not Observable ☐Not Applicable	
402.4.3 [FR20][1]	Fenestration that is not site built is listed and labeled as meeting AAMA /WDMA/CSA 101/I.S.2/A440 or has infiltration rates per NFRC 400 that do not exceed code limits.			☐Complies ☐Does Not ☐Not Observable ☐Not Applicable	
402.4.5 [FR16][2]	IC-rated recessed lighting fixtures sealed at housing/interior finish and labeled to indicate ≤2.0 cfm leakage at 75 Pa.			☐Complies ☐Does Not ☐Not Observable ☐Not Applicable	
403.3.1 [FR12][1]	Supply and return ducts in attics insulated >= R-8 where duct is >= 3 inches in diameter and >= R-6 where < 3 inches. Supply and return ducts in other portions of the building insulated >= R-6 for diameter >= 3 inches and R-4.2 for < 3 inches in diameter.			☐Complies ☐Does Not ☐Not Observable ☐Not Applicable	
403.3.2 [FR13][1]	Ducts, air handlers and filter boxes are sealed with joints/seams compliant with International Mechanical Code or International Residential Code, as applicable.			☐Complies ☐Does Not ☐Not Observable ☐Not Applicable	
403.3.5 [FR15][3]	Building cavities are not used as ducts or plenums.			☐Complies ☐Does Not ☐Not Observable ☐Not Applicable	
403.4 [FR17][2]	HVAC piping conveying fluids above 105 ºF or chilled fluids below 55 ºF are insulated to ≥R-3.	R-____	R-____	☐Complies ☐Does Not ☐Not Observable ☐Not Applicable	
403.4.1 [FR24][1]	Protection of insulation on HVAC piping.			☐Complies ☐Does Not ☐Not Observable ☐Not Applicable	
403.5.3 [FR18][2]	Hot water pipes are insulated to ≥R-3.	R-____	R-____	☐Complies ☐Does Not ☐Not Observable ☐Not Applicable	

1 High Impact (Tier 1) 2 Medium Impact (Tier 2) 3 Low Impact (Tier 3)

Section # & Req.ID	Framing / Rough-In Inspection	Plans Verified Value	Field Verified Value	Complies?	Comments/Assumptions
403.6 [FR19][2]	Automatic or gravity dampers are installed on all outdoor air intakes and exhausts.			☐Complies ☐Does Not ☐Not Observable ☐Not Applicable	

Additional Comments/Assumptions:

1 High Impact (Tier 1) 2 Medium Impact (Tier 2) 3 Low Impact (Tier 3)

Section # & Req.ID	Insulation Inspection	Plans Verified Value	Field Verified Value	Complies?	Comments/Assumptions
303.1 [IN13][2]	All installed insulation is labeled or the installed R-values provided.			☐Complies ☐Does Not ☐Not Observable ☐Not Applicable	
402.1.1, 402.2.5, 402.2.6 [IN3][1]	Wall insulation R-value. If this is a mass wall with at least ½ of the wall insulation on the wall exterior, the exterior insulation requirement applies (FR10).	R-____ ☐ Wood ☐ Mass ☐ Steel	R-____ ☐ Wood ☐ Mass ☐ Steel	☐Complies ☐Does Not ☐Not Observable ☐Not Applicable	*See the Envelope Assemblies table for values.*
303.2 [IN4][1]	Wall insulation is installed per manufacturer's instructions.			☐Complies ☐Does Not ☐Not Observable ☐Not Applicable	

Additional Comments/Assumptions:

1 High Impact (Tier 1) 2 Medium Impact (Tier 2) 3 Low Impact (Tier 3)

Section # & Req.ID	Final Inspection Provisions	Plans Verified Value	Field Verified Value	Complies?	Comments/Assumptions
402.1.1, 402.2.1, 402.2.2, 402.2.6 [FI1][1]	Ceiling insulation R-value.	R-____ ☐ Wood ☐ Steel	R-____ ☐ Wood ☐ Steel	☐Complies ☐Does Not ☐Not Observable ☐Not Applicable	*See the Envelope Assemblies table for values.*
303.1.1.1, 303.2 [FI2][1]	Ceiling insulation installed per manufacturer's instructions. Blown insulation marked every 300 ft².			☐Complies ☐Does Not ☐Not Observable ☐Not Applicable	
402.2.3 [FI22][2]	Vented attics with air permeable insulation include baffle adjacent to soffit and eave vents that extends over insulation.			☐Complies ☐Does Not ☐Not Observable ☐Not Applicable	
402.2.4 [FI3][1]	Attic access hatch and door insulation ≥R-value of the adjacent assembly.	R-____	R-____	☐Complies ☐Does Not ☐Not Observable ☐Not Applicable	
402.4.1.2 [FI17][1]	Blower door test @ 50 Pa. <=5 ach in Climate Zones 1-2, and <=3 ach in Climate Zones 3-8.	ACH 50 =____	ACH 50 =____	☐Complies ☐Does Not ☐Not Observable ☐Not Applicable	
403.3.3 [FI27][1]	Ducts are pressure tested to determine air leakage with either: Rough-in test: Total leakage measured with a pressure differential of 0.1 inch w.g. across the system including the manufacturer's air handler enclosure if installed at time of test. Postconstruction test: Total leakage measured with a pressure differential of 0.1 inch w.g. across the entire system including the manufacturer's air handler enclosure.	____ cfm/100 ft²	____ cfm/100 ft²	☐Complies ☐Does Not ☐Not Observable ☐Not Applicable	
403.3.4 [FI4][1]	Duct tightness test result of <=4 cfm/100 ft2 across the system or <=3 cfm/100 ft2 without air handler @ 25 Pa. For rough-in tests, verification may need to occur during Framing Inspection.	____ cfm/100 ft²	____ cfm/100 ft²	☐Complies ☐Does Not ☐Not Observable ☐Not Applicable	
403.3.2.1 [FI24][1]	Air handler leakage designated by manufacturer at <=2% of design air flow.			☐Complies ☐Does Not ☐Not Observable ☐Not Applicable	
403.1.1 [FI9][2]	Programmable thermostats installed for control of primary heating and cooling systems and initially set by manufacturer to code specifications.			☐Complies ☐Does Not ☐Not Observable ☐Not Applicable	
403.1.2 [FI10][2]	Heat pump thermostat installed on heat pumps.			☐Complies ☐Does Not ☐Not Observable ☐Not Applicable	
403.5.1 [FI11][2]	Circulating service hot water systems have automatic or accessible manual controls.			☐Complies ☐Does Not ☐Not Observable ☐Not Applicable	

1 High Impact (Tier 1) 2 Medium Impact (Tier 2) 3 Low Impact (Tier 3)

Section # & Req.ID	Final Inspection Provisions	Plans Verified Value	Field Verified Value	Complies?	Comments/Assumptions
403.6.1 [FI25][2]	All mechanical ventilation system fans not part of tested and listed HVAC equipment meet efficacy and air flow limits per Table R403.6.1.			☐Complies ☐Does Not ☐Not Observable ☐Not Applicable	
403.2 [FI26][2]	Hot water boilers supplying heat through one- or two-pipe heating systems have outdoor setback control to lower boiler water temperature based on outdoor temperature.			☐Complies ☐Does Not ☐Not Observable ☐Not Applicable	
403.5.1.1 [FI28][2]	Heated water circulation systems have a circulation pump. The system return pipe is a dedicated return pipe or a cold water supply pipe. Gravity and thermos-syphon circulation systems are not present. Controls for circulating hot water system pumps start the pump with signal for hot water demand within the occupancy. Controls automatically turn off the pump when water is in circulation loop is at set-point temperature and no demand for hot water exists.			☐Complies ☐Does Not ☐Not Observable ☐Not Applicable	
403.5.1.2 [FI29][2]	Electric heat trace systems comply with IEEE 515.1 or UL 515. Controls automatically adjust the energy input to the heat tracing to maintain the desired water temperature in the piping.			☐Complies ☐Does Not ☐Not Observable ☐Not Applicable	
403.5.2 [FI30][2]	Demand recirculation water systems have controls that manage operation of the pump and limit the temperature of the water entering the cold water piping to <= 104ºF.			☐Complies ☐Does Not ☐Not Observable ☐Not Applicable	
403.5.4 [FI31][2]	Drain water heat recovery units tested in accordance with CSA B55.1. Potable water-side pressure loss of drain water heat recovery units < 3 psi for individual units connected to one or two showers. Potable water-side pressure loss of drain water heat recovery units < 2 psi for individual units connected to three or more showers.			☐Complies ☐Does Not ☐Not Observable ☐Not Applicable	
404.1 [FI6][1]	90% or more of permanent fixtures have high efficacy lamps.			☐Complies ☐Does Not ☐Not Observable ☐Not Applicable	
404.1.1 [FI23][3]	Fuel gas lighting systems have no continuous pilot light.			☐Complies ☐Does Not ☐Not Observable ☐Not Applicable	
401.3 [FI7][2]	Compliance certificate posted.			☐Complies ☐Does Not ☐Not Observable ☐Not Applicable	

1 High Impact (Tier 1) 2 Medium Impact (Tier 2) 3 Low Impact (Tier 3)

Section # & Req.ID	Final Inspection Provisions	Plans Verified Value	Field Verified Value	Complies?	Comments/Assumptions
303.3 [FI18][3]	Manufacturer manuals for mechanical and water heating systems have been provided.			☐Complies ☐Does Not ☐Not Observable ☐Not Applicable	

Additional Comments/Assumptions:

2018 IECC Energy Efficiency Certificate

Insulation Rating	R-Value	
Above-Grade Wall	21.00	
Below-Grade Wall	13.00	
Floor	0.00	
Ceiling / Roof	49.00	
Ductwork (unconditioned spaces):	____	
Glass & Door Rating	**U-Factor**	**SHGC**
Window	0.30	0.18
Door	0.28	0.19
Heating & Cooling Equipment	**Efficiency**	
Heating System:________	____	
Cooling System:________	____	
Water Heater:________	____	

Name: ________ **Date:** ________

Comments

1 High Impact (Tier 1) 2 Medium Impact (Tier 2) 3 Low Impact (Tier 3)

FILE NAME:

REVIEWED
By Michael Kyne at 2:21 pm, May 23, 2022

APPROVED
Montgomery County
Historic Preservation Commission

GTM ARCHITECTS

7735 OLD GEORGETOWN ROAD
SUITE 700
BETHESDA, MD 20814
(240)333-2000
(240)333-2001 FAX
WWW.GTMARCHITECTS.COM

GTM

Seal

I certify that these documents were prepared or approved by me, and that I am a duly licensed architect under the laws of the State of Maryland, license number 8385, Expiration Date: 12-06-2022.

Consultant

Project
19 HIGH ST LOT 4

Owner

Developer

Issue Description	Date
PERMIT SET	04/11/2022

GTM Project No.	18.0320
Checked By	GTM
Drawn By	LEO/NW
Scale	AS NOTED

Sheet Title

RESCHECK REPORT

Sheet No.
EC003

COPYRIGHT, 2019 GTM ARCHITECTS, INC.

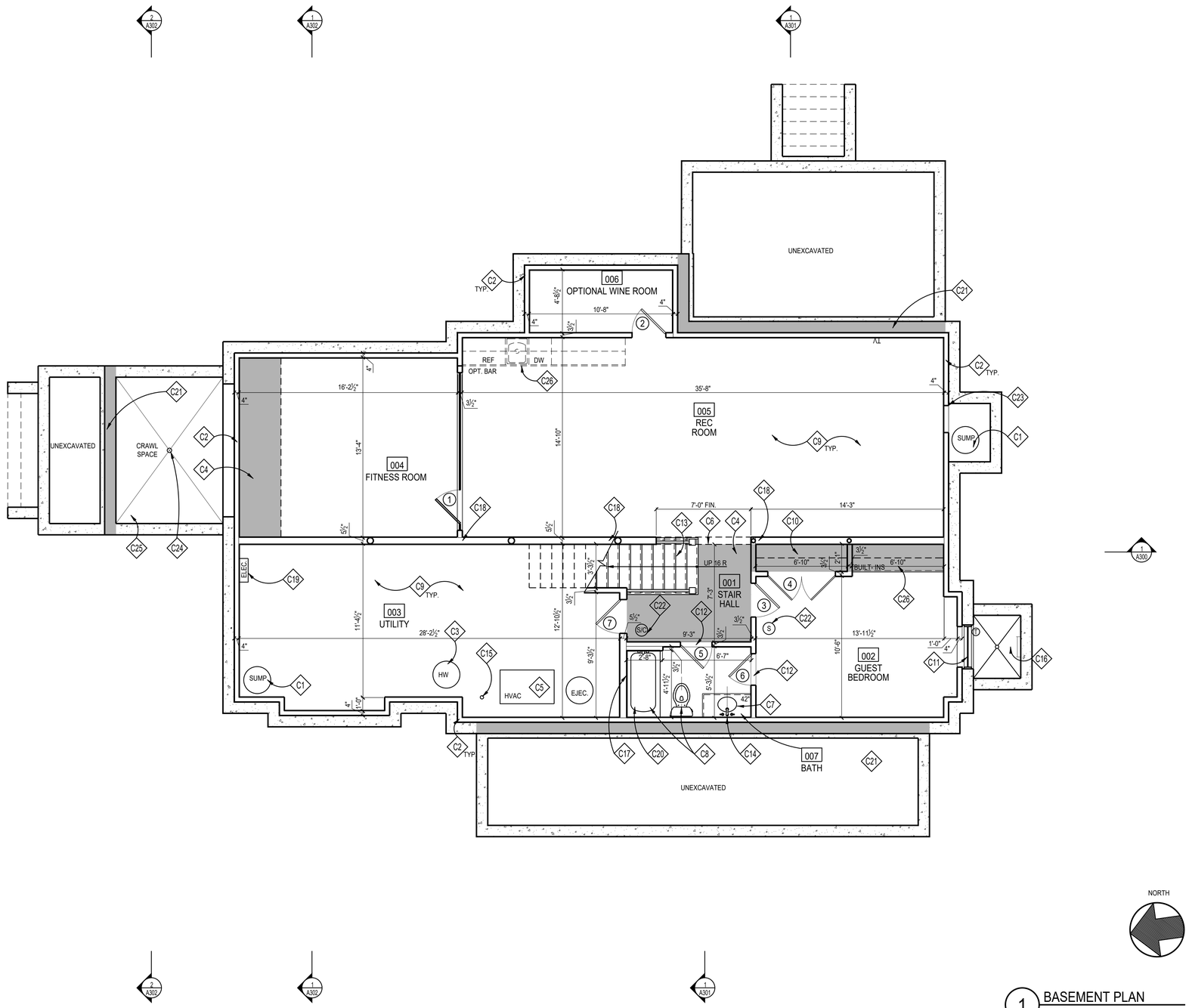

1 BASEMENT PLAN
SCALE: 1/4"=1'=0

CONSTRUCTION NOTES

C1	SUMP PUMP WITH BATTERY POWERED SUMP BACKUP; LOCATION T.B.D.
C2	FUR OUT WALLS W/ FULL 2x4's W/ R-13 BATT INSULATION, TYP.; PROVIDE P.T. SILL; HOLD 1/2" OFF MASONRY WALL
C3	HOT WATER HEATER, LOCATION APPROXIMATE, SEE SHEET '002'
C4	TONED AREA INDICATES LOWERED CEILING TO ALLOW FOR DUCTWORK, BEAMS AND/OR AESTHETIC APPEAL
C5	HVAC, SEE SHEET '002'
C6	CASED OPENING @ 7'-0" FINISHED
C7	VANITY W/ SINK, FAUCET & COUNTERTOP; T.B.S.
C8	PLUMBING FIXTURES & ACCESSORIES T.B.S.
C9	REINF. CONC. SLAB ON GRADE; SEE FOUNDATION PLAN
C10	PROVIDE CLOSET ROD & SHELF
C11	EGRESS WINDOW; MAX. 44" SILL HEIGHT FROM A.F.F.
C12	MARBLE THRESHOLD T.B.S.
C13	WD. STEPS; 1x RISERS W/ TREADS TO MATCH H.W.F.; WOOD RAILING T.B.S. SEE DETAILS '1, 6/A302', FOLLOW IRC 2018 R311.7 FOR STAIR AND RAILING
C14	1/4" POLISHED PLATE GLASS MIRROR, T.B.S.
C15	DRAIN FOR HWH & HVAC. LOCATION T.B.D., RUN TO SUMP PUMP
C16	WINDOW WELL; EGRESS LADDER & COVER AS REQ'D. BY CODE DRAIN TO SUMP PUMP OR DAYLIGHT
C17	12" W x 14" H TILED RECESS w/ SLOPED SILL @ 42" A.F.F.
C18	STEEL COLUMN, SEE FOUNDATION AND FRAMING PLANS
C19	APPROXIMATE ELECTRICAL PANEL LOCATION; FIELD VERIFY FINAL LOCATION
C20	TUB & SHOWER FLOORS AND WALLS SHALL BE FINISHED W/ A NON-ABSORBENT SURFACE AT LEAST 6" ABOVE THE FLOOR, PER IRC 2018
C21	TONED WALL INDICATES EXTENT OF REVERSE LEDGE; SEE FOUNDATION & FRAMING PLANS
C22	INSTALL INTERCONNECTED & HARD-WIRED SMOKE DETECTORS/ SMOKE & CARBON MONOXIDE DETECTORS IN ACCORDANCE W/ IRC 2018
C23	ACCESS PANEL PER IRC 2018
C24	FLOOR DRAIN, DRAIN TO SUMP
C25	MIN. 3" CONC. MUDSLAB, SLOPE TO DRAIN
C26	PROVIDE CUSTOM BUILT-INS
C27	EJECTOR PUMP, TBS

NOTE:

1. UNLESS INDICATED OTHERWISE, DIMENSIONS ARE TO FACE OF FRAMING
2. VERIFY ALL EXTERIOR RISER + TREAD DIMENSIONS IN THE FIELD
3. SEE DETAILS 18-20/A304 FOR ENERGY EFFICIENT FRAMING DETAILS
4. PROVIDE MINERAL WOOL SOUND INSULATION IN WALLS, CEILING, + FLOOR OF THE FOLLOWING ROOMS (U.N.O.):

   003 UTILITY
   007 BATH

5. (T) = TEMPERED GLASS

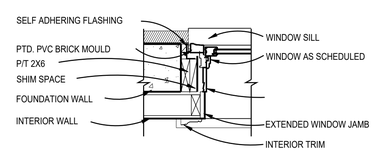

2 TYP. BASEMENT WINDOW/DOOR JAMB
Scale: 1"=1'-0"

WALL TYPES

TYPICAL NEW EXTERIOR WALL: 10" CONC. WALL; SEE FOUNDATION PLAN; FUR WHERE SHOWN WITH 2x4 STUDS @ 16" O.C., (SEE THERMAL ENVELOPE, SHEET "EC001" FOR INSULATION INFORMATION)

TYPICAL NON-BEARING INTERIOR PARTITION: 2"x4" STUDS 16" O.C. W/ ½" GYP. BD. EACH SIDE; INCREASE WALL THICKNESS AS SHOWN TO ALIGN FINISHES WHERE SHOWN

REVIEWED
By Michael Kyne at 2:21 pm, May 23, 2022

APPROVED
Montgomery County
Historic Preservation Commission

GTM ARCHITECTS

7735 OLD GEORGETOWN ROAD
SUITE 700
BETHESDA, MD 20814
(240)333-2000
(240)333-2001 FAX
WWW.GTMARCHITECTS.COM

Seal

Consultant

Project
19 HIGH ST
LOT 4

Owner

Developer

PERMIT SET	04/11/2022

Issue Description	Date

GTM Project No.	18.0320
Checked By	GTM
Drawn By	LEO/NW
Scale	AS NOTED

Sheet Title
BASEMENT PLAN

Sheet No.
A100

COPYRIGHT, 2019 GTM ARCHITECTS, INC.

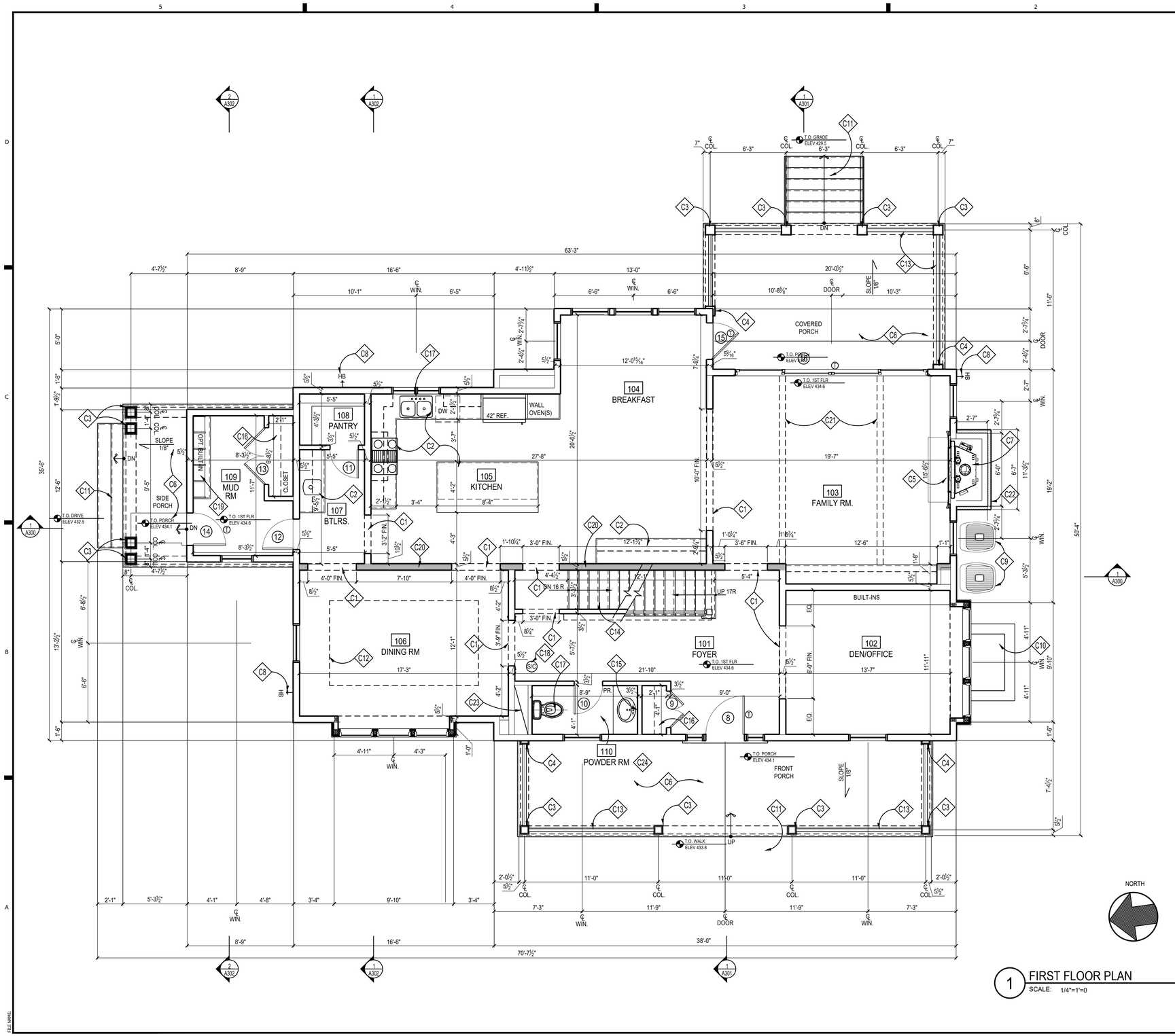

1 FIRST FLOOR PLAN
SCALE: 1/4"=1'=0

CONSTRUCTION NOTES

- C1 CASED OPENING @ 8'-0" FINISHED
- C2 KITCHEN CABINETS, APPLIANCES + COUNTER TOPS, ETC. T.B.S.
- C3 SQUARE COLUMN, BUILT UP FROM 2x10's, PTD. (WRAP 6x6 POST) OR 10" SQ. HB&G PERMACAST COLUMN CUT FROM 9'-0" STOCK W/ TUSCAN BASE AND CAPITAL
- C4 PTD. PILASTER TO MATCH COLUMNS; SEE ELEVATIONS
- C5 HEARTH, MATERIAL T.B.S.
- C6 FLAGSTONE @ PORCH, T.B.S
- C7 DIRECT VENT FIREPLACE, T.B.S. INSTALL PER MANUFACTURER REQUIREMENTS
- C8 FROST PROOF HOSE BIB BELOW; CONFIRM LOCATION
- C9 CONDENSOR UNIT LOCATION APPROXIMATE
- C10 WINDOW WELL BELOW; SEE DETAIL '10/A302'
- C11 FLAGSTONE TREADS, T.B.S., F.V. RISE/RUN
- C12 OPTIONAL TRAY CEILING ABOVE, SEE PLAN FOR HEIGHTS
- C13 PROVIDE GUARDRAIL TO COMPLY W/ IRC 2018
- C14 WD. STEPS; 1x RISERS W/ TREADS TO MATCH H.W.F.; WOOD RAILING T.B.S, SEE DETAILS '1,6/A3.2', FOLLOW IRC 2018 FOR STAIR AND RAILING
- C15 1/4" POLISHED PLATE GLASS MIRROR, T.B.S.
- C16 PROVIDE CLOSET ROD & SHELF
- C17 PLUMBING FIXTURES & ACCESSORIES T.B.S.
- C18 HARD-WIRED SMOKE DETECTOR/CARBON MONOXIDE COMBO UNIT PER IRC 2018
- C19 BUILT-IN BENCH W/ LOCKERS & HOOKS; SEE TYP DETAIL ON '5/A303'
- C20 DARKER TONED WALL INDICATES 2x6 LOAD BEARING WALL @ 16" O.C.
- C21 OPTIONAL BEAMS ABOVE, T.B.D.
- C22 STONE VENEER T.B.D.
- C23 CHASE FOR RETURN AIR
- C24 VANITY W/ SINK, FAUCET & COUNTERTOP; T.B.S.

NOTE:

1. UNLESS INDICATED OTHERWISE, DIMENSIONS ARE TO FACE OF FRAMING
2. VERIFY ALL EXTERIOR RISER + TREAD DIMENSIONS IN THE FIELD
3. SEE DETAILS '18-20/A304' FOR ENERGY EFFICIENT FRAMING DETAILS
4. PROVIDE MINERAL WOOL SOUND INSULATION IN WALLS, CEILING, + FLOOR OF THE FOLLOWING ROOMS (U.N.O.):

   110 POWDER ROOM

5. ⓣ = TEMPERED GLASS

WALL TYPES

TYPICAL NEW EXTERIOR WALL: 2x6 WOOD STUDS 16" O.C., W/ INSULATION (SEE THERMAL ENVELOPE, SHEET "EC001" FOR INSULATION LOCATION & INFORMATION) W/ ½" EXTERIOR SHEATHING, AIR & WATER RESISTIVE BUILDING WRAP, & SIDING; SEE ELEVATIONS. INTERIOR FINISH TO BE ½" GYP. BD.

TYPICAL NON-BEARING INTERIOR PARTITION: U.N.O. 2x4 WOOD STUDS 16" O.C. W/ ½" GYP. BD. EACH SIDE, INCREASE WALL THICKNESS AS SHOWN TO ALIGN FINISHES WHERE SHOWN

REVIEWED
By Michael Kyne at 2:21 pm, May 23, 2022

APPROVED
Montgomery County
Historic Preservation Commission

GTM ARCHITECTS
7735 OLD GEORGETOWN ROAD
SUITE 700
BETHESDA, MD 20814
(240)333-2000
(240)333-2001 FAX
WWW.GTMARCHITECTS.COM

Seal

Consultant

Project
19 HIGH ST
LOT 4

Owner

Developer

PERMIT SET	04/11/2022
Issue Description	Date

GTM Project No.	18.0320
Checked By	GTM
Drawn By	LEO/NW
Scale	AS NOTED

Sheet Title
FIRST FLOOR PLAN

Sheet No.
A101

COPYRIGHT, 2019 GTM ARCHITECTS, INC.

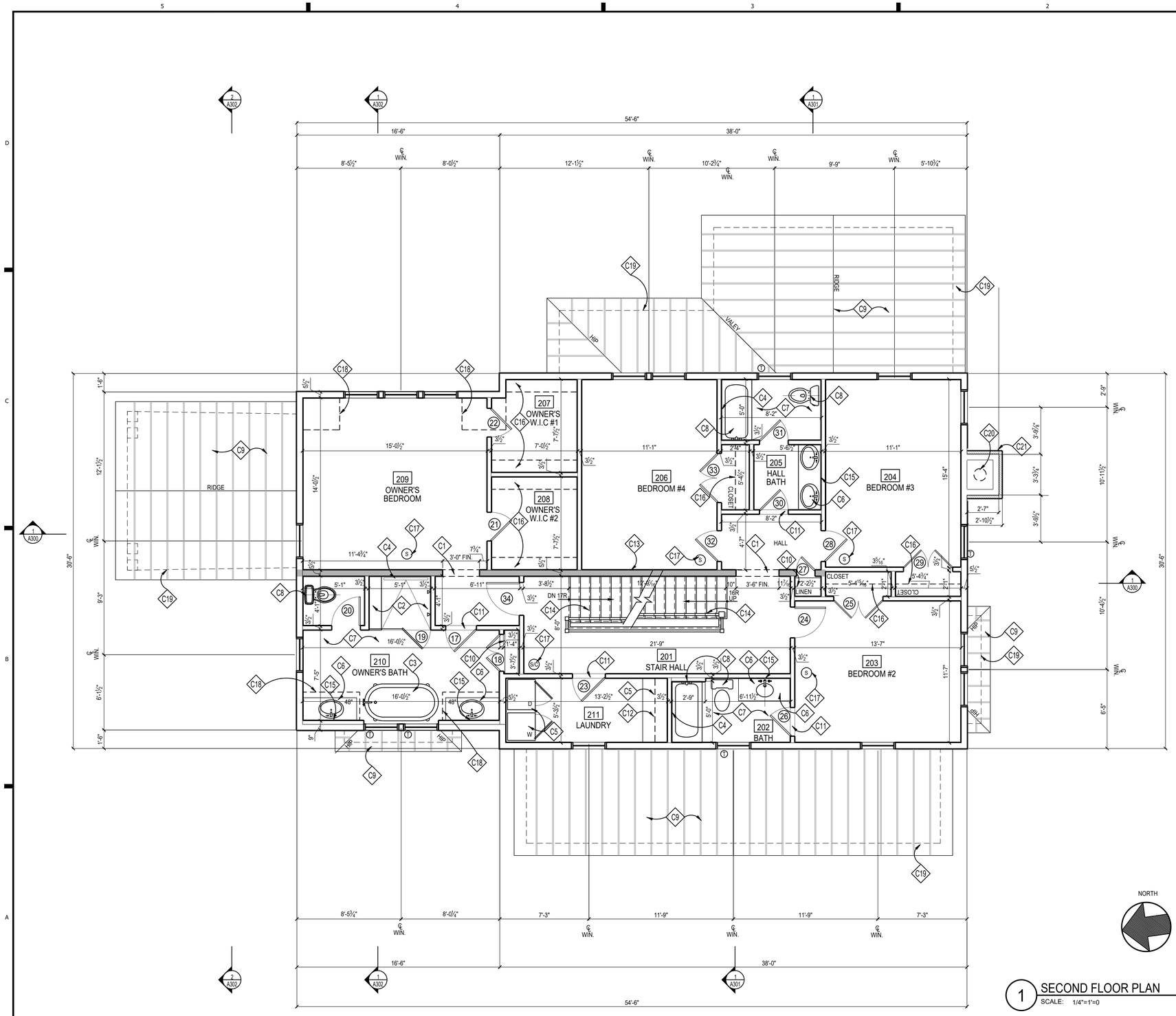

1 SECOND FLOOR PLAN
SCALE: 1/4"=1'=0

CONSTRUCTION NOTES

C1	CASED OPENING @ 7'-0" FINISHED
C2	TILED SHOWER AND TILED BENCH; REFER TO DETAIL '16,17/A302', W/ TEMPERED GLASS ENCLOSURE & DOOR
C3	SOAKING TUB WITHIN BUILT-IN DECK, T.B.S.
C4	12" W x 14" H TILED RECESS w/ SLOPED SILL @ 42" A.F.F.
C5	LAUNDRY ROOM CABINETS, APPLIANCES + COUNTER TOPS, ETC. T.B.S.; PROVIDE OVERFLOW PAN AND DRAIN UNDER WASHER
C6	VANITY W/ SINK, FAUCET & COUNTERTOP; T.B.S.
C7	TUB & SHOWER FLOORS AND WALLS SHALL BE FINISHED W/ A NON-ABSORBENT SURFACE AT LEAST 6" ABOVE THE FLOOR, PER IRC 2018
C8	PLUMBING FIXTURES & ACCESSORIES T.B.S.
C9	ROOF BELOW; SEE ROOF PLAN
C10	PROVIDE (5) EQUALLY SPACED SHELEVES, PTD.
C11	MARBLE THRESHOLD, T.B.S.; SEE DETAIL '5/A302'
C12	OPTIONAL LAUNDRY SINK, T.B.S.
C13	DARKER TONED WALL INDICATES 2x6 LOAD BEARING WALL @ 16" O.C.
C14	WD. STEPS; 1x RISERS W/ TREADS TO MATCH H.W.F.; WOOD RAILING T.B.S, SEE DETAILS '1,6/A302', FOLLOW IRC 2018 FOR STAIR AND RAILING
C15	1/4" POLISHED PLATE GLASS MIRROR, T.B.S.
C16	PROVIDE CLOSET ROD & SHELF
C17	HARD-WIRED SMOKE DETECTOR/CARBON MONOXIDE COMBO UNIT PER IRC 2018
C18	DASHED LINE OF SLOPED CEILING ABOVE
C19	DASHED LINE OF BEAM/WALL/COLUMN BELOW
C20	B-VENT DOUBLE WALL FLUE FOR PRE-FAB FIREPLACE BELOW, PROVIDE CHASE AND CLEARANCES PER MANUF. SPECS
C21	STONE VENEER T.B.D.

NOTE:

1. UNLESS INDICATED OTHERWISE, DIMENSIONS ARE TO FACE OF FRAMING
2. VERIFY ALL EXTERIOR RISER + TREAD DIMENSIONS IN THE FIELD
3. SEE DETAILS '18-20/A304' FOR ENERGY EFFICIENT FRAMING DETAILS
4. PROVIDE MINERAL WOOL SOUND INSULATION IN WALLS, CEILING, + FLOOR OF THE FOLLOWING ROOMS (U.N.O.):

202 BATH	210 OWNER'S BATH
209 OWNER'S BEDROOM	211 LAUNDRY
	205 HALL BATH

5. (T) = TEMPERED GLASS

WALL TYPES

TYPICAL NEW EXTERIOR WALL: 2x6 WOOD STUDS 16" O.C., W/ INSULATION (SEE THERMAL ENVELOPE, SHEET "EC001" FOR INSULATION LOCATION & INFORMATION) W/ ½" EXTERIOR SHEATHING, AIR & WATER RESISTIVE BUILDING WRAP, & SIDING; SEE ELEVATIONS. INTERIOR FINISH TO BE ½" GYP. BD.

TYPICAL NON-BEARING INTERIOR PARTITION: U.N.O. 2x4 WOOD STUDS 16" O.C. W/ ½" GYP. BD. EACH SIDE, INCREASE WALL THICKNESS AS SHOWN TO ALIGN FINISHES WHERE SHOWN

REVIEWED
By Michael Kyne at 2:21 pm, May 23, 2022

APPROVED
Montgomery County
Historic Preservation Commission

GTM ARCHITECTS

7735 OLD GEORGETOWN ROAD
SUITE 700
BETHESDA, MD 20814
(240)333-2000
(240)333-2001 FAX
WWW.GTMARCHITECTS.COM

Seal

STATE OF MARYLAND — ROBERT E. SCHWARTZ — No. 15185 — ARCHITECT

I certify that these documents were prepared or approved by me, and that I am a duly licensed architect under the laws of the State of Maryland, license number 15185, Expiration Date: 12/06/2022.

Consultant

Project
19 HIGH ST
LOT 4

Owner

Developer

Issue Description	Date
PERMIT SET	04/11/2022

GTM Project No.	18.0320
Checked By	GTM
Drawn By	LEO/NW
Scale	AS NOTED

Sheet Title
SECOND FLOOR PLAN

Sheet No.
A102

COPYRIGHT, 2019 GTM ARCHITECTS, INC.

FILE NAME:

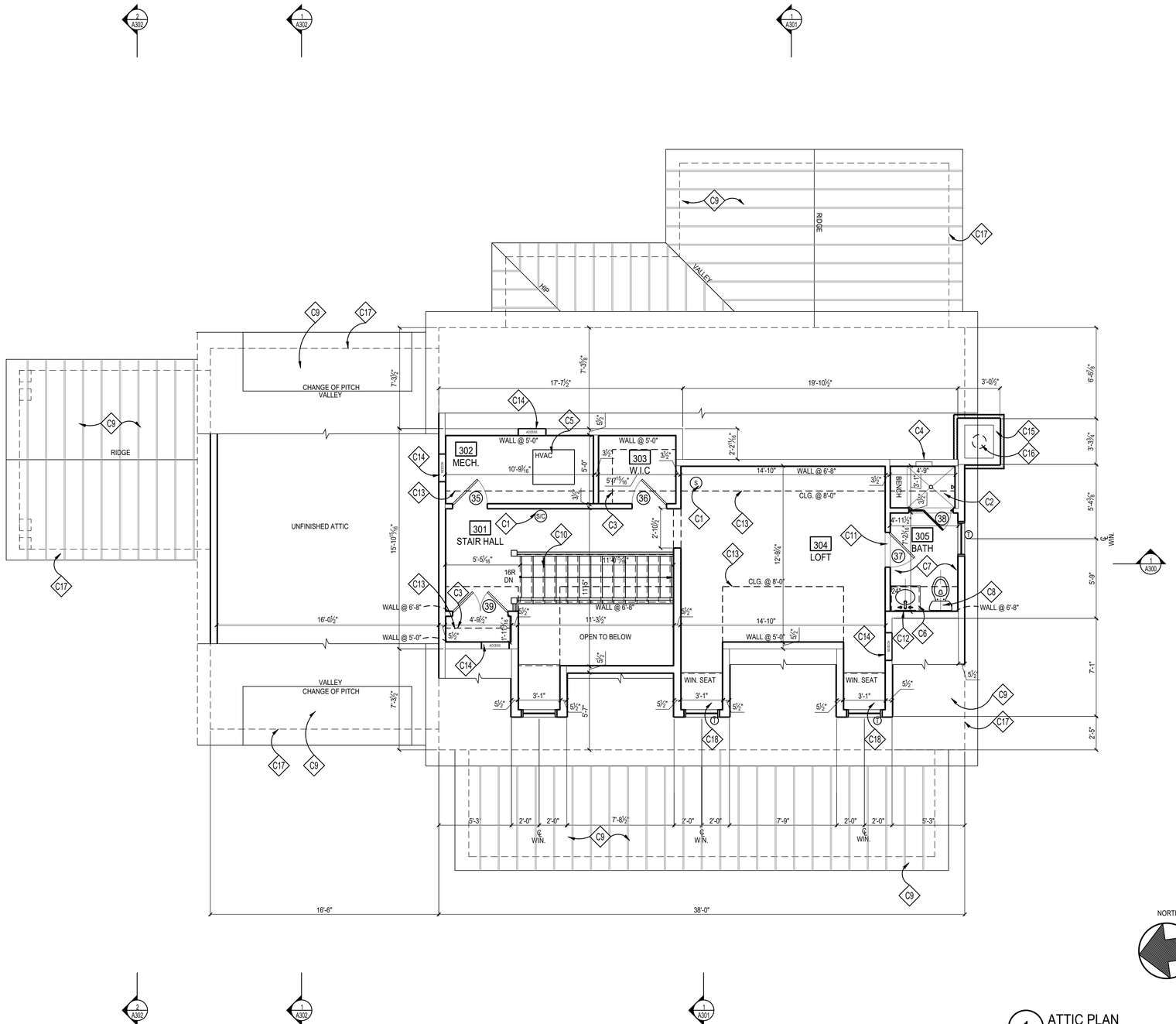

1 ATTIC PLAN
SCALE: 1/4"=1'=0

CONSTRUCTION NOTES

- C1 HARD-WIRED SMOKE DETECTOR/CARBON MONOXIDE COMBO UNIT PER IRC 2018
- C2 TILED SHOWER; REFER TO DETAIL '16,17/A302', W/ TEMPERED GLASS ENCLOSURE & DOOR
- C3 PROVIDE CLOSET ROD & SHELF
- C4 12" W x 14" H TILED RECESS w/ SLOPED SILL @ 42" A.F.F.
- C5 HVAC, SEE SHEET '002'
- C6 VANITY W/ SINK, FAUCET & COUNTERTOP; T.B.S.
- C7 TUB & SHOWER FLOORS AND WALLS SHALL BE FINISHED W/ A NON-ABSORBENT SURFACE AT LEAST 6" ABOVE THE FLOOR, PER IRC 2018
- C8 PLUMBING FIXTURES & ACCESSORIES T.B.S.
- C9 ROOF BELOW; SEE ROOF PLAN
- C10 WD. STEPS; 1x RISERS W/ TREADS TO MATCH H.W.F.; WOOD RAILING T.B.S, SEE DETAILS '1,6/A302', FOLLOW IRC 2018 FOR STAIR AND RAILING
- C11 MARBLE THRESHOLD, T.B.S.; SEE DETAIL '5/A302'
- C12 1/4" POLISHED PLATE GLASS MIRROR, T.B.S.
- C13 SLOPED CEILING ABOVE
- C14 PROVIDE ACCESS PANEL PER IRC 2018
- C15 STONE VENEER T.B.D.
- C16 CHIMNEY FLUE
- C17 DASHED LINE OF BEAM/WALL/COLUMN BELOW
- C18 BUILT-IN WINDOW SEAT, SEE DETAIL '1/A303'

NOTE:

1. UNLESS INDICATED OTHERWISE, DIMENSIONS ARE TO FACE OF FRAMING
2. VERIFY ALL EXTERIOR RISER + TREAD DIMENSIONS IN THE FIELD
3. SEE DETAILS '18-20/A304' FOR ENERGY EFFICIENT FRAMING DETAILS
4. PROVIDE MINERAL WOOL SOUND INSULATION IN WALLS, CEILING, + FLOOR OF THE FOLLOWING ROOMS (U.N.O.):

'302' MECHANICAL ROOM
'305' BATH

WALL TYPES

TYPICAL NEW EXTERIOR WALL: 2x6 WOOD STUDS 16" O.C., W/ INSULATION (SEE THERMAL ENVELOPE, SHEET "EC001" FOR INSULATION LOCATION & INFORMATION) W/ ,½" EXTERIOR SHEATHING, AIR & WATER RESISTIVE BUILDING WRAP, & SIDING; SEE ELEVATIONS. INTERIOR FINISH TO BE ½" GYP. BD.

TYPICAL NON-BEARING INTERIOR PARTITION: U.N.O. 2x4 WOOD STUDS 16" O.C. W/ ½" GYP. BD. EACH SIDE, INCREASE WALL THICKNESS AS SHOWN TO ALIGN FINISHES WHERE SHOWN

REVIEWED
By Michael Kyne at 2:21 pm, May 23, 2022

APPROVED
Montgomery County
Historic Preservation Commission

GTM ARCHITECTS

7735 OLD GEORGETOWN ROAD
SUITE 700
BETHESDA, MD 20814
(240)333-2000
(240)333-2001 FAX
WWW.GTMARCHITECTS.COM

Seal

I certify that these documents were prepared or approved by me, and that I am a duly licensed architect under the laws of the State of Maryland, license number 8886. Expiration Date: 12/06/2022

Consultant

Project
19 HIGH ST
LOT 4

Owner

Developer

PERMIT SET	04/11/2022

Issue Description	*Date*

GTM Project No.	18.0320
Checked By	GTM
Drawn By	LEO/NW
Scale	AS NOTED

Sheet Title
ATTIC PLAN

Sheet No.
A103

COPYRIGHT, 2019 GTM ARCHITECTS, INC.

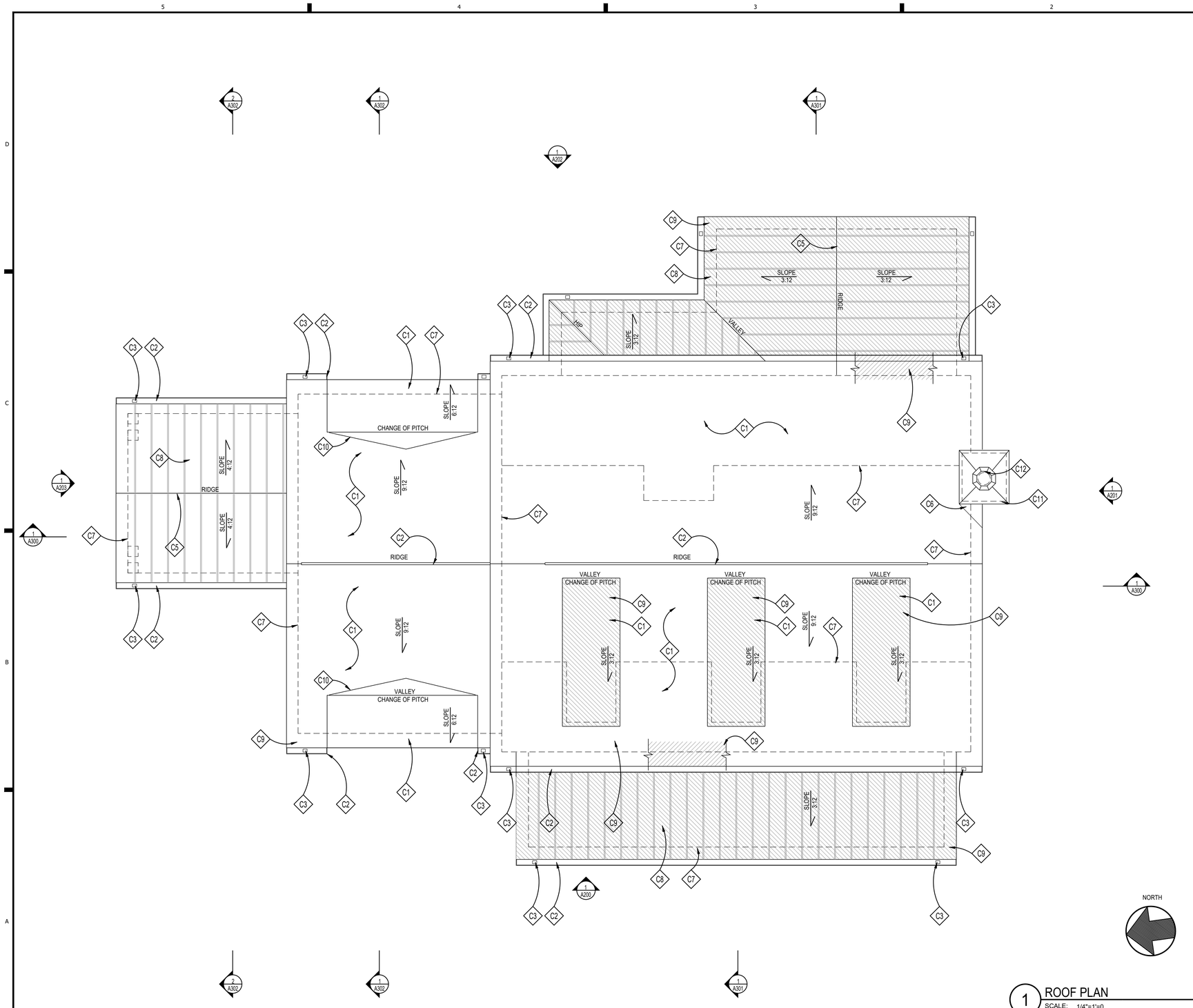

1 ROOF PLAN
SCALE: 1/4"=1'=0

CONSTRUCTION NOTES

C1	SINTHETIC ECO STAR MAJESTIC OR EQ. SLATE ROOF SHINGLES, COLOR AND STYLE T.B.S.
C2	PTD. ALUM. 6" HALF ROUND GUTTER T.B.S., TYP.
C3	PTD. ALUM. 4" ROUND DOWNSPOUT T.B.S., TYP.
C4	RIDGE/HIP VENTS BY COR-A-VENT OR APP'D EQUAL ELIMINATE WITH THE USE OF FOAM INSULATION
C5	RIDEGE VENT FOR METAL ROOF
C6	METAL CRICKET PER IRC. MIN 4:12 SLOPE
C7	LINE OF FRAME WALL BELOW, TYP.
C8	STANDING SEAM METAL ROOF BELOW, T.B.S.
C9	ICE AND WATER GUARD AT ALL EAVES, VALLEYS, AND LOW SLOPE ROOFS; SEE GENERAL NOTE 1 BELOW
C10	MTL. RAIN DIVERTER FLASHING, MATERIAL COLOR T.B.D.
C11	STONE VENEER T.B.D.
C12	WOOD-FRAME CHIMNEY WITH THIN'STONE VENEER CLADDING & SLOPED STONE CHIMNEY CAP ABOVE, T.B.S.

LEGEND

LOW SLOPE ROOF,
PROVIDE ICE & WEATHER GUARD

GENERAL ROOFING NOTES

1. PROVIDE SELF-ADHERING, 40 MIL ICE AND WATER GUARD UNDERLAYMENT UNDER SHINGLES AT ALL VALLEYS AND FROM LOWEST EDGE OF ROOF SURFACES TO A POINT AT LEAST 24" INSIDE THE EXTERIOR WALL LINE, AND ON ALL AREAS WITH A SLOPE LESS THAN 4:12.
2. SEE FRAMING PLAN FOR OVERBUILD AREAS
3. DOTTED LINE INDICATES LINE OF BUILDING BELOW

REVIEWED
By Michael Kyne at 2:21 pm, May 23, 2022

APPROVED
Montgomery County
Historic Preservation Commission

GTM ARCHITECTS
7735 OLD GEORGETOWN ROAD
SUITE 700
BETHESDA, MD 20814
(240)333-2000
(240)333-2001 FAX
WWW.GTMARCHITECTS.COM

Seal

Consultant

Project
19 HIGH ST
LOT 4

Owner

Developer

Issue Description	Date
PERMIT SET	04/11/2022

GTM Project No.	18.0320
Checked By	GTM
Drawn By	LEO/NW
Scale	AS NOTED

Sheet Title
ROOF PLAN

Sheet No.
A104

COPYRIGHT, 2019 GTM ARCHITECTS, INC.

1 FRONT ELEVATION
SCALE: 1/4"=1'=0

ELEVATION NOTES

- E1 RIDGE VENTS BY COR-A-VENT OR APPROVED EQUAL, TYP.; REMOVE IF USING SPRAY FOAM INSULATION, SEE DETAILS '12 & 19/A302'
- E2 SYNTHETIC ECO STAR MAJESTIC OR EQ. SLATE ROOF; T.B.S., SEE ROOF PLAN
- E3 HALF ROUND GUTTER (ON 1x6 PTD. FASCIA BD.) & DOWNSPOUT, T.B.S.
- E4 PTD. HARDIPLANK SMOOTH LAP SIDING W/ MITERED CORNERS, 7" EXPOSURE, INSTALL PER MANUFACTURER
- E5 PTD. WOOD 5/4x6 WINDOW/DOOR TRIM W/ WM-6930 HISTORIC SILL, TYP.; SEE TRIM NOTES, THIS SHEET
- E6 STANDING SEAM METAL ROOF, T.B.S.
- E7 OPERABLE SOLID-CORE WOOD SHUTTERS & HARDWARE, T.B.S., SEE DETAIL '15/A303'
- E8 SLOPED STONE CAP
- E9 SQUARE COLUMN, BUILT UP FROM 2x10's, PTD. (WRAP 6x6 POST) OR 10" SQ. HB&G PERMACAST COLUMN CUT FROM 9'-0" STOCK W/ TUSCAN BASE AND CAPITAL
- E10 FLAGSTONE PORCH/STOOP W/ NATURAL STONE VENEER BASE
- E11 CONCEALED ALUM. FLASHING & COUNTER FLASHING @ ALL VERTICAL TRANSITIONS, TYP. EXTEND MIN. 8" BEHIND SIDING
- E12 THINSTONE VENEER T.B.S., INSTALL PER MANUF SPECS USING LATICRETE MASONRY VENEER INSTALLATION SYSTEM OR EQ.
- E13 PTD. 1x6 FASCIA BD. W/ WM-47 CROWN, SEE DETAIL '18/A302'
- E14 PTD. CEMENT STUCCO FINISH, SEE SHEET 002 FOR ADD'L INFORMATION
- E15 RIDGE VENT FOR METAL ROOF SEE DETAIL
- E16 ZALESKI MODEL 4 SNOW GUARDS OR EQ., TYP.; INSTALL PER MANUFAC. 2 OR 3 ROWS
- E17 PTD. FRONT PORCH EAVE SEE DETAIL '19/A305; ALIGN W/ TOP OF WINDOWS AND PORCH COLUMNS; SEE NOTES
- E18 PTD. WOOD DORMER ROOF EAVE, SEE DETAIL '2/A305' & SEE NOTES
- E19 PAINT GRADE FRONT DOOR T.B.S.
- E20 PTD. WOOD PANEL W/ RECESS AND BASE CAP, SEE DETAIL '17/A304'
- E21 PTD. WOOD UPPER MAIN ROOF EAVE, SEE DETAIL '17/A305' & SEE GENERAL NOTES
- E22 PTD. WOOD LOWER MAIN ROOF EAVE, SEE DETAIL '16/A305' & SEE GENERAL NOTES
- E23 MTL. RAIN DIFFUSER FLASHING, MATERIAL COLOR T.B.D.
- E24 CHIMNEY CAP T.B.S.; SEE DETAIL 12/A303
- E25 STONE VENEER CHIMNEY
- E26 PTD. WOOD GAURDRAIL PER IRC 2018

NOTE:

1. VERIFY ALL EXTERIOR RISER & TREAD DIMENSIONS IN FIELD
2. ALL EXTERIOR WOOD TRIM TO BE TREATED FOR PROTECTION AGAINST MOISTURE, ROT, FUNGAL ATTACK & INSECTS, WINDSOR-ONE+, LIFESPAN OR EQ.
3. (T) = TEMPERED GLASS
   (E) = EGRESS

REVIEWED
By Michael Kyne at 2:21 pm, May 23, 2022

APPROVED
Montgomery County
Historic Preservation Commission

GTM ARCHITECTS

7735 OLD GEORGETOWN ROAD
SUITE 700
BETHESDA, MD 20814
(240)333-2000
(240)333-2001 FAX
WWW.GTMARCHITECTS.COM

Seal

I certify that these documents were prepared or approved by me, and that I am a duly licensed architect under the laws of the State of Maryland, license number 8886, Expiration Date: 12/06/2022.

Consultant

Project
19 HIGH ST
LOT 4

Owner

Developer

Issue Description	Date
PERMIT SET	04/11/2022

GTM Project No.	18.0320
Checked By	GTM
Drawn By	LEO/NW
Scale	AS NOTED

Sheet Title
FRONT ELEVATION

Sheet No.
A200

COPYRIGHT, 2019 GTM ARCHITECTS, INC.

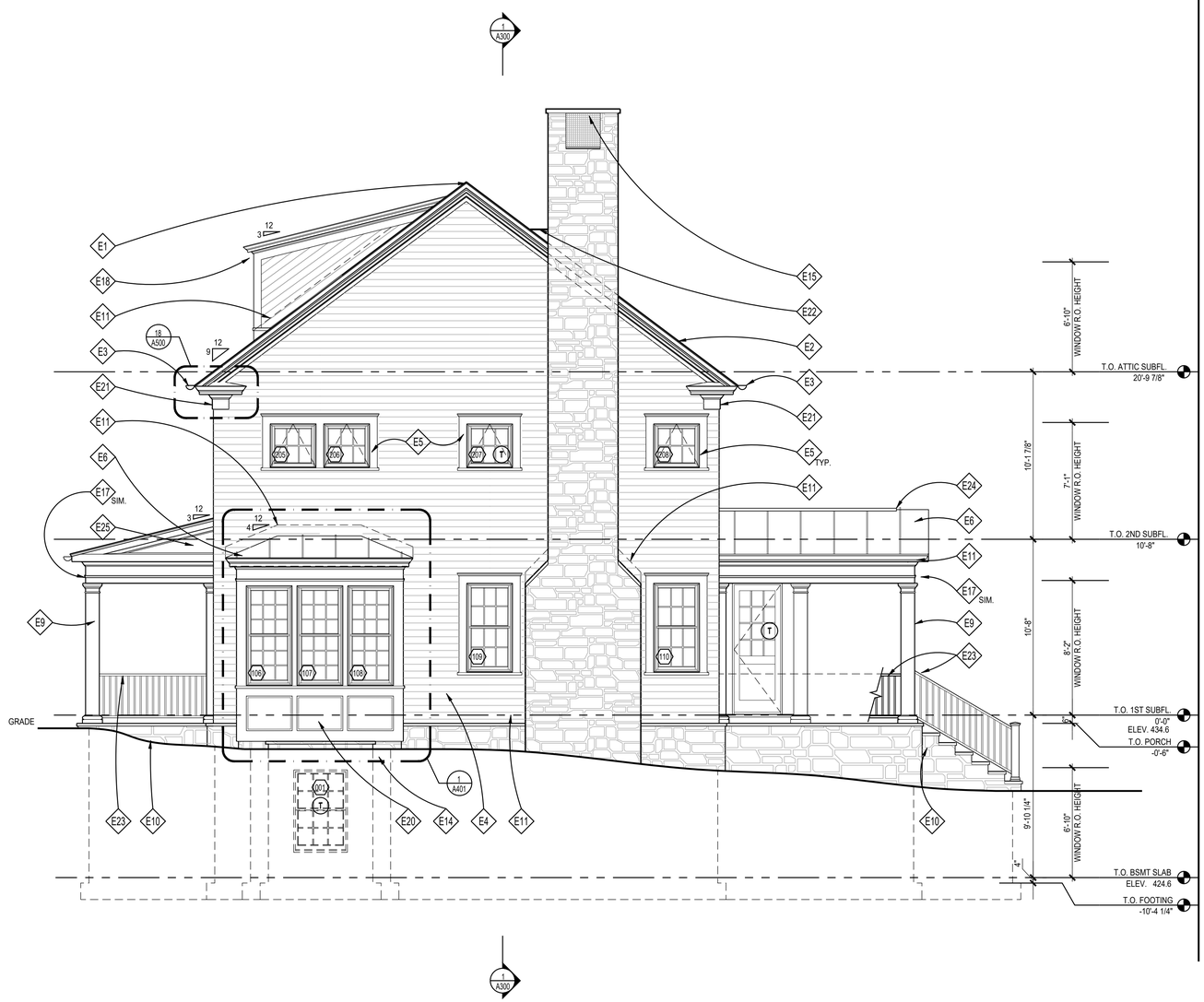

1 RIGHT SIDE ELEVATION
SCALE: 1/4"=1'=0

ELEVATION NOTES

E1	RIDGE VENTS BY COR-A-VENT OR APPROVED EQUAL, TYP.; REMOVE IF USING SPRAY FOAM INSULATION, SEE DETAILS '12 & 19/A302'
E2	SYNTHETIC ECO STAR MAJESTIC SLATE ROOF; T.B.S., SEE ROOF PLAN
E3	HALF ROUND GUTTER (ON 1x6 PTD. FASCIA BD.) & DOWNSPOUT, T.B.S.
E4	PTD. HARDIPLANK SMOOTH LAP SIDING W/ MITERED CORNERS, 7" EXPOSURE, INSTALL PER MANUFACTURER
E5	PTD. WOOD 5/4x6 WINDOW/DOOR TRIM W/ WM-6930 HISTORIC SILL, TYP.; SEE TRIM NOTES, THIS SHEET
E6	STANDING SEAM METAL ROOF, T.B.S.
E7	OPERABLE SOLID-CORE WOOD SHUTTERS & HARDWARE, T.B.S., SEE DETAIL '15/A303'
E8	PTD. 5/4x TRIM BAND W/ WM-47 & WM-287; CUT TO FIT, ALIGN W/ TOP OF WINDOWS/DOORS AND PORCH COLUMNS
E9	SQUARE COLUMN, BUILT UP FROM 2x10's, PTD. (WRAP 6x6 POST) OR 10" SQ. HB&G PERMACAST COLUMN CUT FROM 9'-0" STOCK W/ TUSCAN BASE AND CAPITAL
E10	FLAGSTONE PORCH/STOOP W/ NATURAL STONE VENEER BASE
E11	CONCEALED ALUM. FLASHING & COUNTER FLASHING @ ALL VERTICAL TRANSITIONS, TYP. EXTEND MIN. 8" BEHIND SIDING
E12	THINSTONE VENEER T.B.S., INSTALL PER MANUF SPECS USING LATICRETE MASONRY VENEER INSTALLATION SYSTEM OR EQ.
E13	PTD. 1x6 FASCIA BD. W/ WM-47 CROWN, SEE DETAIL '18/A302'
E14	PTD. CEMENT STUCCO FINISH, SEE SHEET 002 FOR ADD'L INFORMATION
E15	CHIMNEY CAP T.B.S.; SEE DETAIL 12/A303
E16	ZALESKI MODEL 4 SNOW GUARDS OR EQ., TYP.; INSTALL PER MANUFAC.
E17	PTD. FRONT PORCH EAVE SEE DETAIL '19/A305; ALIGN W/ TOP OF WINDOWS AND PORCH COLUMNS; SEE NOTES
E18	PTD. WOOD DORMER ROOF EAVE, SEE DETAIL '2/A305' & SEE NOTES
E19	PAINT GRADE FRONT DOOR T.B.S.
E20	PTD. WOOD PANEL W/ RECESS AND BASE CAP, SEE DETAIL '17/A304'
E21	PTD. WOOD UPPER MAIN ROOF EAVE, SEE DETAIL '17/A305' & SEE GENERAL NOTES
E22	MTL. CRICKET
E23	PTD. WOOD GAURDRAIL PER IRC 2018
E24	RIDGE VENT FOR METAL ROOF, SEE DETAIL
E25	PTD. 1/4" WOOD PANEL, SEE DETAIL

NOTE:

1. VERIFY ALL EXTERIOR RISER & TREAD DIMENSIONS IN FIELD
2. ALL EXTERIOR WOOD TRIM TO BE TREATED FOR PROTECTION AGAINST MOISTURE, ROT, FUNGAL ATTACK & INSECTS, WINDSOR-ONE+, LIFESPAN OR EQ.
3. (T) = TEMPERED GLASS
   (E) = EGRESS

REVIEWED
By Michael Kyne at 2:21 pm, May 23, 2022

APPROVED
Montgomery County
Historic Preservation Commission

GTM ARCHITECTS

7735 OLD GEORGETOWN ROAD
SUITE 700
BETHESDA, MD 20814
(240)333-2000
(240)333-2001 FAX
WWW.GTMARCHITECTS.COM

Seal

STATE OF MARYLAND — LEO E. ORNSTEIN — 35886 — ARCHITECT

I certify that these documents were prepared or approved by me, and that I am a duly licensed architect under the laws of the State of Maryland, license number 35886, Expiration Date: 12/06/2022.

Consultant

Project
19 HIGH ST
LOT 4

Owner

Developer

PERMIT SET	04/11/2022
Issue Description	*Date*

GTM Project No.	18.0320
Checked By	GTM
Drawn By	LEO/NW
Scale	AS NOTED

Sheet Title

RIGHT SIDE ELEVATION

Sheet No.

A201

COPYRIGHT, 2019 GTM ARCHITECTS, INC.

FILE NAME:

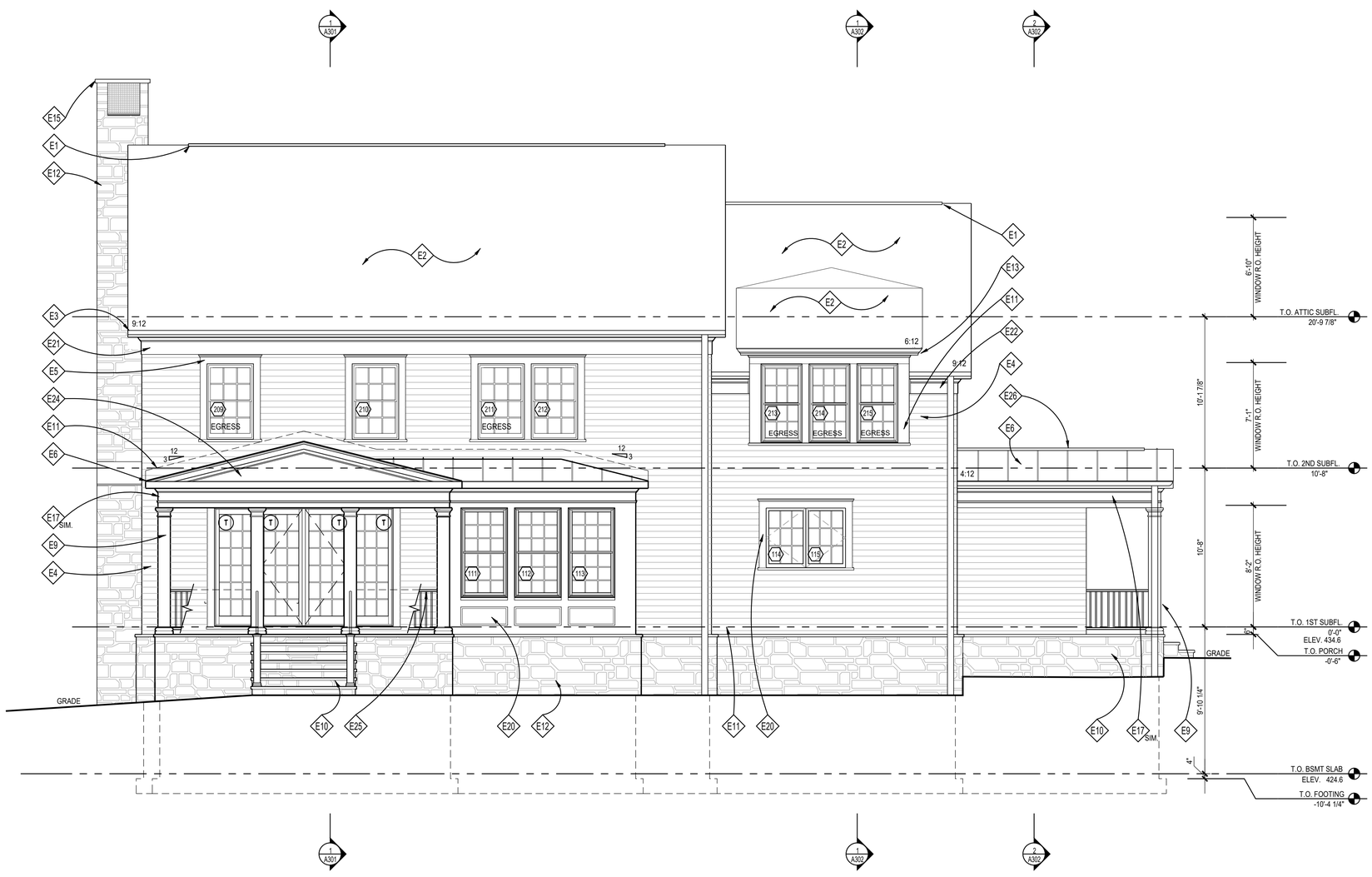

1 REAR ELEVATION
SCALE: 1/4"=1'=0

ELEVATION NOTES

- E1 RIDGE VENTS BY COR-A-VENT OR APPROVED EQUAL, TYP.; REMOVE IF USING SPRAY FOAM INSULATION, SEE DETAILS '12 & 19/A302'
- E2 SLATE ROOF; T.B.S., SEE ROOF PLAN
- E3 HALF ROUND GUTTER (ON 1x6 PTD. FASCIA BD.) & DOWNSPOUT, T.B.S.
- E4 PTD. HARDIPLANK SMOOTH LAP SIDING W/ MITERED CORNERS, 7" EXPOSURE, INSTALL PER MANUFACTURER
- E5 PTD. WOOD 5/4x6 WINDOW/DOOR TRIM W/ WM-6930 HISTORIC SILL, TYP.; SEE TRIM NOTES, THIS SHEET
- E6 STANDING SEAM METAL ROOF, T.B.S.
- E7 OPERABLE SOLID-CORE WOOD SHUTTERS & HARDWARE, T.B.S., SEE DETAIL '15/A303'
- E8 PTD. 5/4x TRIM BAND W/ WM-47 & WM-287; CUT TO FIT, ALIGN W/ TOP OF WINDOWS/DOORS AND PORCH COLUMNS
- E9 SQUARE COLUMN, BUILT UP FROM 2x10's, PTD. (WRAP 6x6 POST) OR 10" SQ. HB&G PERMACAST COLUMN CUT FROM 9'-0" STOCK W/ TUSCAN BASE AND CAPITAL
- E10 FLAGSTONE PORCH/STOOP W/ NATURAL STONE VENEER BASE
- E11 CONCEALED ALUM. FLASHING & COUNTER FLASHING @ ALL VERTICAL TRANSITIONS, TYP. EXTEND MIN. 8" BEHIND SIDING
- E12 THINSTONE VENEER T.B.S., INSTALL PER MANUF SPECS USING LATICRETE MASONRY VENEER INSTALLATION SYSTEM OR EQ.
- E13 PTD. 1x6 FASCIA BD. W/ WM-47 CROWN, SEE DETAIL '18/A302'
- E14 PTD. CEMENT STUCCO FINISH, SEE SHEET 002 FOR ADD'L INFORMATION
- E15 CHIMNEY CAP T.B.S.; SEE DETAIL 12/A303
- E16 ZALESKI MODEL 4 SNOW GUARDS OR EQ., TYP.; INSTALL PER MANUFAC.
- E17 PTD. FRONT PORCH EAVE SEE DETAIL '19/A305; ALIGN W/ TOP OF WINDOWS AND PORCH COLUMNS; SEE NOTES
- E18 PTD. WOOD DORMER ROOF EAVE, SEE DETAIL '2/A305' & SEE NOTES
- E19 PAINT GRADE FRONT DOOR T.B.S.
- E20 PTD. WOOD PANEL W/ RECESS AND BASE CAP, SEE DETAIL '17/A304'
- E21 PTD. WOOD UPPER MAIN ROOF EAVE, SEE DETAIL '17/A305' & SEE GENERAL NOTES
- E22 PTD. WOOD LOWER MAIN ROOF EAVE, SEE DETAIL '16/A305' & SEE GENERAL NOTES
- E23 PTD. WOOD LOWER MAIN ROOF EAVE, SEE DETAIL '16/A305' & SEE GENERAL NOTES
- E24 PTD. 1/4" WOOD PANEL, SEE DETAIL
- E25 PTD. WOOD GAURDRAIL PER IRC 2018
- E26 RIDGE VENT FOR METAL ROOF, SEE DETAIL

NOTE:

1. VERIFY ALL EXTERIOR RISER & TREAD DIMENSIONS IN FIELD
2. ALL EXTERIOR WOOD TRIM TO BE TREATED FOR PROTECTION AGAINST MOISTURE, ROT, FUNGAL ATTACK & INSECTS, WINDSOR-ONE+, LIFESPAN OR EQ.
3. (T) = TEMPERED GLASS
   (E) = EGRESS

REVIEWED
By Michael Kyne at 2:21 pm, May 23, 2022

APPROVED
Montgomery County
Historic Preservation Commission

GTM ARCHITECTS

7735 OLD GEORGETOWN ROAD
SUITE 700
BETHESDA, MD 20814
(240)333-2000
(240)333-2001 FAX
WWW.GTMARCHITECTS.COM

Seal

STATE OF MARYLAND · LEO E. ORNSTEIN · No. 15186 · ARCHITECT

I certify that these documents were prepared or approved by me, and that I am a duly licensed architect under the laws of the State of Maryland, license number 15186, Expiration Date: 12/06/2022

Consultant

Project
19 HIGH ST
LOT 4

Owner

Developer

PERMIT SET	04/11/2022

Issue Description	*Date*

GTM Project No.	18.0320
Checked By	GTM
Drawn By	LEO/NW
Scale	AS NOTED

Sheet Title

REAR ELEVATION

Sheet No.

A202

COPYRIGHT, 2019 GTM ARCHITECTS, INC.

FILE NAME:

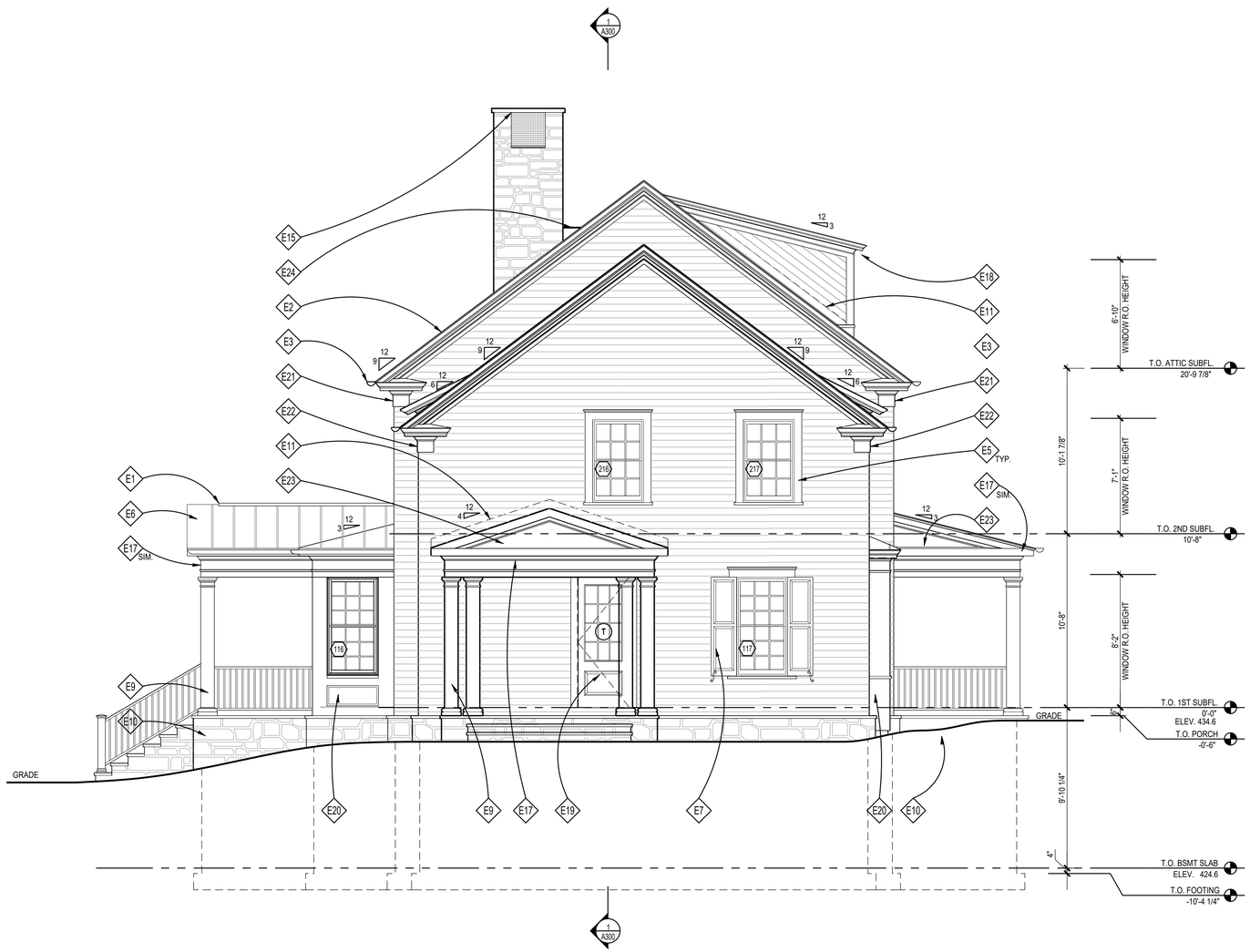

1 LEFT SIDE ELEVATION
SCALE: 1/4"=1'=0

ELEVATION NOTES

- E1 RIDGE VENTS BY COR-A-VENT OR APPROVED EQUAL, TYP.; REMOVE IF USING SPRAY FOAM INSULATION, SEE DETAILS '12 & 19/A302'
- E2 SLATE ROOF; T.B.S., SEE ROOF PLAN
- E3 HALF ROUND GUTTER (ON 1x6 PTD. FASCIA BD.) & DOWNSPOUT, T.B.S.
- E4 PTD. HARDIPLANK SMOOTH LAP SIDING W/ MITERED CORNERS, 7" EXPOSURE, INSTALL PER MANUFACTURER
- E5 PTD. WOOD 5/4x6 WINDOW/DOOR TRIM W/ WM-6930 HISTORIC SILL, TYP.; SEE TRIM NOTES, THIS SHEET
- E6 STANDING SEAM METAL ROOF, T.B.S.
- E7 OPERABLE SOLID-CORE WOOD SHUTTERS & HARDWARE, T.B.S., SEE DETAIL '15/A303'
- E8 PTD. 5/4x TRIM BAND W/ WM-47 & WM-287; CUT TO FIT, ALIGN W/ TOP OF WINDOWS/DOORS AND PORCH COLUMNS
- E9 SQUARE COLUMN, BUILT UP FROM 2x10's, PTD. (WRAP 6x6 POST) OR 10" SQ. HB&G PERMACAST COLUMN CUT FROM 9'-0" STOCK W/ TUSCAN BASE AND CAPITAL
- E10 FLAGSTONE PORCH/STOOP W/ NATURAL STONE VENEER BASE
- E11 CONCEALED ALUM. FLASHING & COUNTER FLASHING @ ALL VERTICAL TRANSITIONS, TYP. EXTEND MIN. 8" BEHIND SIDING
- E12 THINSTONE VENEER T.B.S., INSTALL PER MANUF SPECS USING LATICRETE MASONRY VENEER INSTALLATION SYSTEM OR EQ.
- E13 PTD. 1x6 FASCIA BD. W/ WM-47 CROWN, SEE DETAIL '18/A302'
- E14 PTD. CEMENT STUCCO FINISH, SEE SHEET 002 FOR ADD'L INFORMATION
- E15 CHIMNEY CAP T.B.S.; SEE DETAIL 12/A303
- E16 ZALESKI MODEL 4 SNOW GUARDS OR EQ., TYP.; INSTALL PER MANUFAC.
- E17 PTD. FRONT PORCH EAVE SEE DETAIL '19/A305; ALIGN W/ TOP OF WINDOWS AND PORCH COLUMNS; SEE NOTES
- E18 PTD. WOOD DORMER ROOF EAVE, SEE DETAIL '2/A305' & SEE NOTES
- E19 PAINT GRADE FRONT DOOR T.B.S.
- E20 PTD. WOOD PANEL W/ RECESS AND BASE CAP, SEE DETAIL '17/A304'
- E21 PTD. WOOD UPPER MAIN ROOF EAVE, SEE DETAIL '17/A305' & SEE GENERAL NOTES
- E22 PTD. WOOD LOWER MAIN ROOF EAVE, SEE DETAIL '16/A305' & SEE GENERAL NOTES
- E23 PTD. 1/4" WOOD PANEL, SEE DETAIL
- E24 MTL. CRICKET

NOTE:

1. VERIFY ALL EXTERIOR RISER & TREAD DIMENSIONS IN FIELD
2. ALL EXTERIOR WOOD TRIM TO BE TREATED FOR PROTECTION AGAINST MOISTURE, ROT, FUNGAL ATTACK & INSECTS, WINDSOR-ONE+, LIFESPAN OR EQ.
3. (T) = TEMPERED GLASS
   (E) = EGRESS

REVIEWED
By Michael Kyne at 2:21 pm, May 23, 2022

APPROVED
Montgomery County
Historic Preservation Commission

GTM ARCHITECTS

7735 OLD GEORGETOWN ROAD
SUITE 700
BETHESDA, MD 20814
(240)333-2000
(240)333-2001 FAX
WWW.GTMARCHITECTS.COM

Seal

STATE OF MARYLAND
LEO E. ORNSTEIN
ARCHITECT

I certify that these documents were prepared or approved by me, and that I am a duly licensed architect under the laws of the State of Maryland, license number 8886. Expiration Date: 12/06/2022

Consultant

Project
19 HIGH ST
LOT 4

Owner

Developer

PERMIT SET	04/11/2022

Issue Description	*Date*

GTM Project No.	18.0320
Checked By	GTM
Drawn By	LEO/NW
Scale	AS NOTED

Sheet Title

LEFT SIDE ELEVATION

Sheet No.

A203

COPYRIGHT, 2019 GTM ARCHITECTS, INC.

FILE NAME:

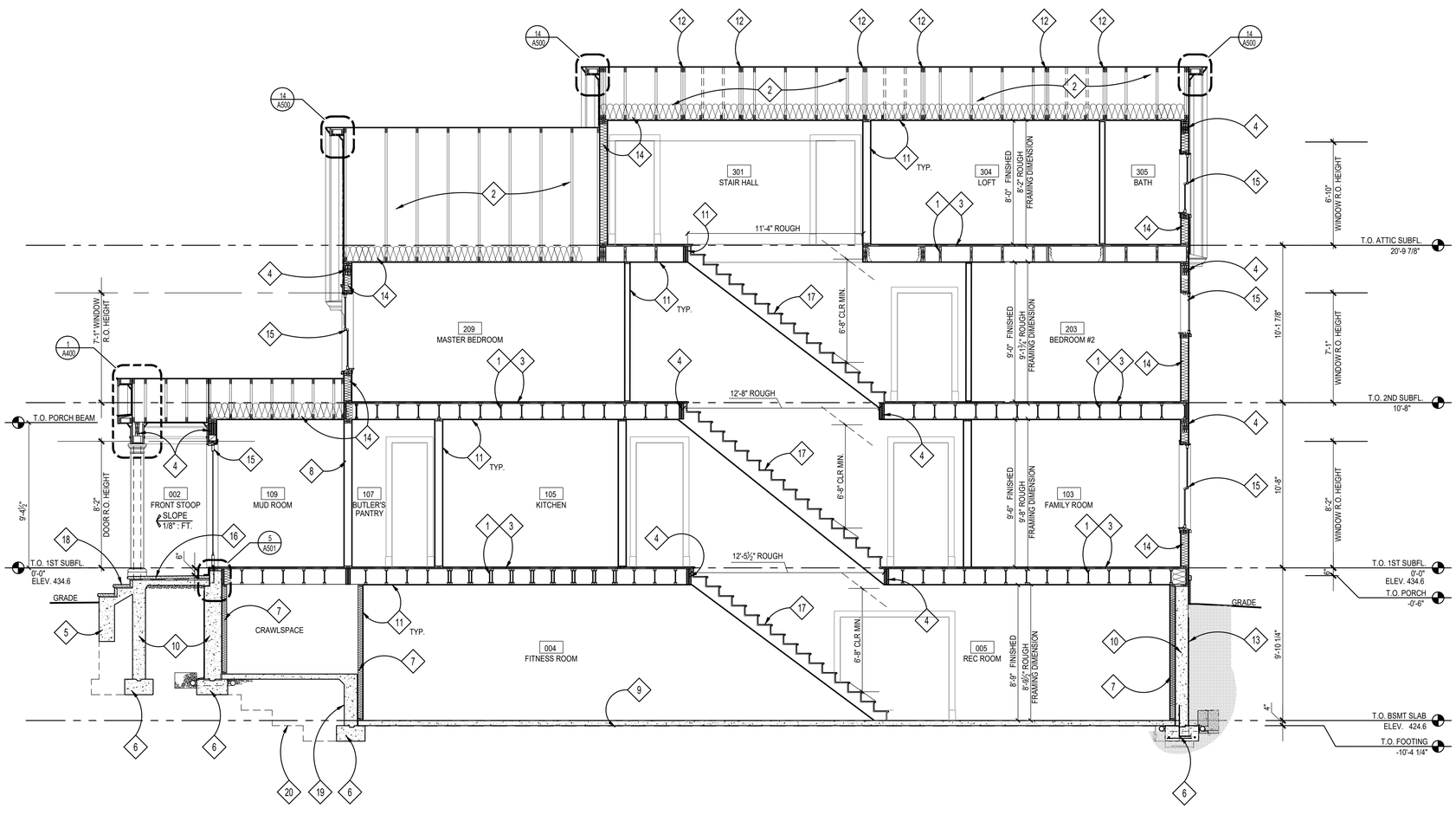

1 BUILDING SECTION
SCALE: 1/4"=1'=0

SECTION NOTES

1. FLOOR JOISTS; SEE FRAMING PLANS
2. ROOF TRUSSES BY TRUSS MANUFACTURER; SEE FRAMING PLANS
3. 3/4" ADVANTECH SUBFLOOR; GLUED & SCREWED
4. BEAM/ LINTEL/ HEADER; SEE FRAMING PLANS
5. GRADE BEAM SUPPORTED BY CONC. WING WALL, SEE FOUNDATION PLAN
6. FOOTING; SEE FOUNDATION PLAN
7. FUR OUT BASEMENT WALLS W/ 2x4's @ 16" O.C. & R-13 BATT INSULATION, TYP.
8. 2X6 LOAD BEARING WALL, SEE FRAMING PLANS
9. REINF. CONC. SLAB; SEE FOUNDATION PLAN
10. CONCRETE FOUNDATION WALL; SEE FOUNDATION PLAN
11. 1/2" GYP. BD
12. GIRDER TRUSS BY TRUSS MANUFACTURER; SEE FRAMING PLANS
13. WATERPROOFING AND DRAINAGE BD TO GRADE
14. INSULATION, SEE THERMAL ENVELOPE SHEET EC001
15. SCHEDULED WINDOW/DOOR
16. FLAGSTONE; T.B.S, ON 1" SETTING BED ON STRUCTURAL CONC. SLAB, SEE STRUCTURAL DRAWINGS.
17. STAIRCASE & RAILING; TREADS & RISERS, MATCH H.W.F., T.B.S., SEE DETAILS 1, 6, 7, 8, 12 & 13 /A501, FOLLOW IRC 2018, RAILING T.B.S.
18. STEPS W/ THINSTONE VENEER RISERS & FLAGSTONE TREADS TO GRADE, FIELD VERIFY RISE/RUN
19. TURNDOWN SLAB, SEE STRUCTURAL DETAILS
20. DASHED LINE INDICATES STEPPED FOOTING BEYOND, SEE FOUNDATION PLAN, EXTEND FOOTERS DOWN TO SUITABLE SOILS

NOTE:

1. VERIFY ALL EXTERIOR RISER & TREAD DIMENSIONS IN FIELD
2. ALL EXTERIOR WOOD TRIM TO BE TREATED FOR PROTECTION AGAINST MOISTURE, ROT, FUNGAL ATTACK & INSECTS, WINDSOR-ONE+, LIFESPAN OR EQ.
3. (T) = TEMPERED GLASS
   (E) = EGRESS

REVIEWED
By Michael Kyne at 2:21 pm, May 23, 2022

APPROVED
Montgomery County
Historic Preservation Commission

GTM ARCHITECTS

7735 OLD GEORGETOWN ROAD
SUITE 700
BETHESDA, MD 20814
(240)333-2000
(240)333-2001 FAX
WWW.GTMARCHITECTS.COM

Seal

STATE OF MARYLAND
LEO E. ORNSTEIN
No. 15886
ARCHITECT

I certify that these documents were prepared or approved by me, and that I am a duly licensed architect under the laws of the State of Maryland, license number 15886, Expiration Date: 12/06/2022.

Consultant

Project

19 HIGH ST
LOT 4

Owner

Developer

PERMIT SET	04/11/2022
Issue Description	*Date*

GTM Project No.	18.0320
Checked By	GTM
Drawn By	LEO/NW
Scale	AS NOTED

Sheet Title

BUILDING SECTION

Sheet No.

A300

COPYRIGHT, 2019 GTM ARCHITECTS, INC.

FILE NAME:

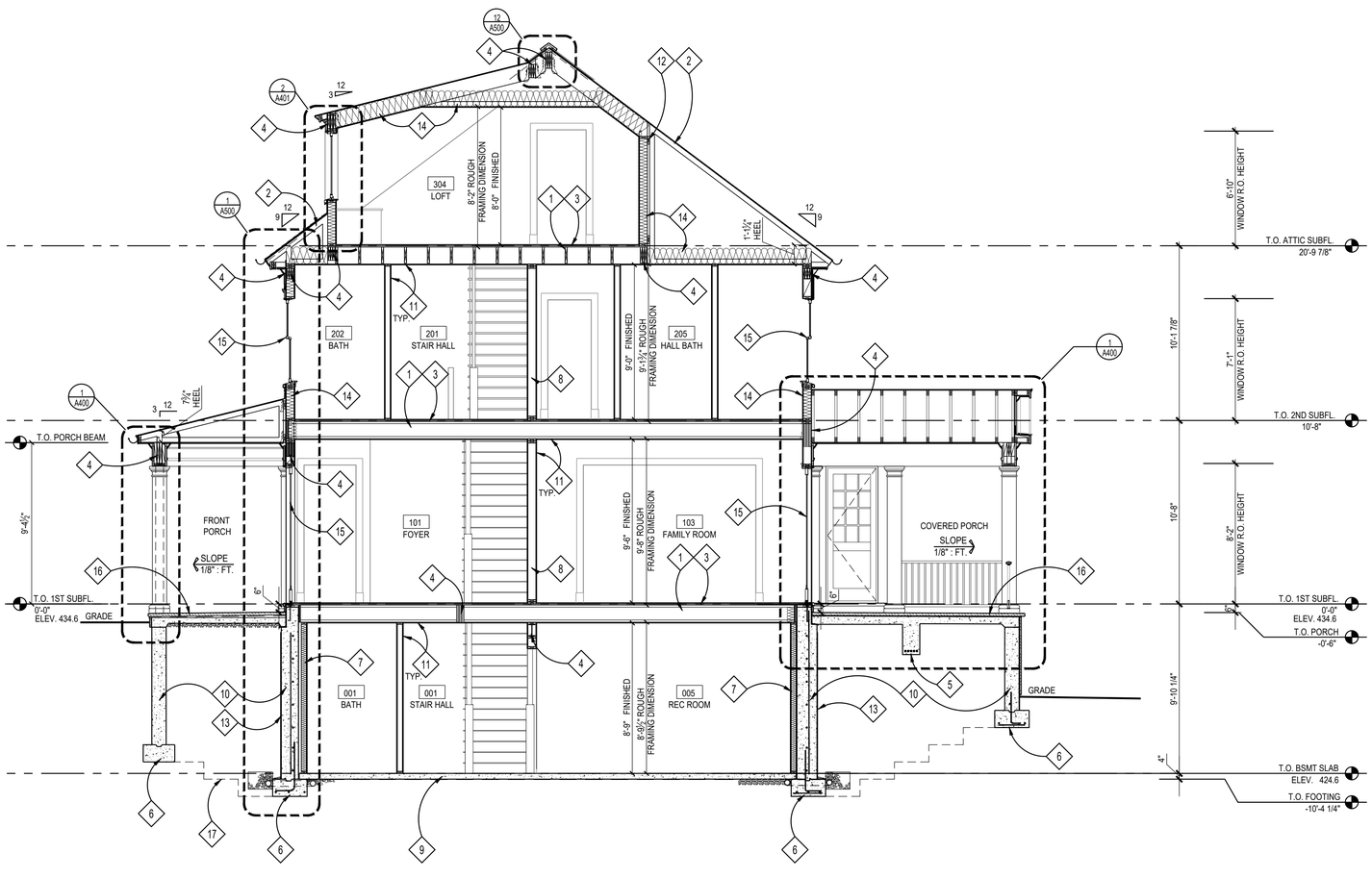

1 BUILDING SECTION
SCALE: 1/4"=1'=0

SECTION NOTES

1. FLOOR JOISTS; SEE FRAMING PLANS
2. ROOF TRUSSES BY TRUSS MANUFACTURER; SEE FRAMING PLANS
3. 3/4" ADVANTECH SUBFLOOR; GLUED & SCREWED
4. BEAM/ LINTEL/ HEADER; SEE FRAMING PLANS
5. GRADE BEAM, SEE FOUNDATION PLAN
6. FOOTING; SEE FOUNDATION PLAN
7. FUR OUT BASEMENT WALLS W/ 2x4's @ 16" O.C. & R-13 BATT INSULATION, TYP.
8. 2X6 LOAD BEARING WALL, SEE FRAMING PLANS
9. REINF. CONC. SLAB; SEE FOUNDATION PLAN
10. CONCRETE FOUNDATION WALL; SEE FOUNDATION PLAN
11. 1/2" GYP. BD
12. GIRDER TRUSS BY TRUSS MANUFACTURER; SEE FRAMING PLANS
13. WATERPROOFING AND DRAINAGE BD TO GRADE
14. INSULATION, SEE THERMAL ENVELOPE SHEET EC001
15. SCHEDULED WINDOW/DOOR
16. FLAGSTONE; T.B.S. ON 1" SETTING BED ON STRUCTURAL CONC. SLAB, SEE STRUCTURAL DRAWINGS.
17. DASHED LINE INDICATES STEPPED FOOTING BEYOND, SEE FOUNDATION PLAN; EXTEND FOOTERS DOWN TO SUITABLE SOILS

NOTE:

1. VERIFY ALL EXTERIOR RISER & TREAD DIMENSIONS IN FIELD
2. ALL EXTERIOR WOOD TRIM TO BE TREATED FOR PROTECTION AGAINST MOISTURE, ROT, FUNGAL ATTACK & INSECTS, WINDSOR-ONE+, LIFESPAN OR EQ.
3. (T) = TEMPERED GLASS
   (E) = EGRESS

REVIEWED
By Michael Kyne at 2:21 pm, May 23, 2022

APPROVED
Montgomery County
Historic Preservation Commission

GTM ARCHITECTS

773S OLD GEORGETOWN ROAD
SUITE 700
BETHESDA, MD 20814
(240)333-2000
(240)333-2001 FAX
WWW.GTMARCHITECTS.COM

Seal

I certify that these documents were prepared or approved by me, and that I am a duly licensed architect under the laws of the State of Maryland, license number 8886. Expiration Date: 12/06/2022

Consultant

Project
19 HIGH ST
LOT 4

Owner

Developer

Issue Description	Date
PERMIT SET	04/11/2022

GTM Project No.	18.0320
Checked By	GTM
Drawn By	LEO/NW
Scale	AS NOTED

Sheet Title
BUILDING SECTION

Sheet No.
A301

COPYRIGHT, 2019 GTM ARCHITECTS, INC.

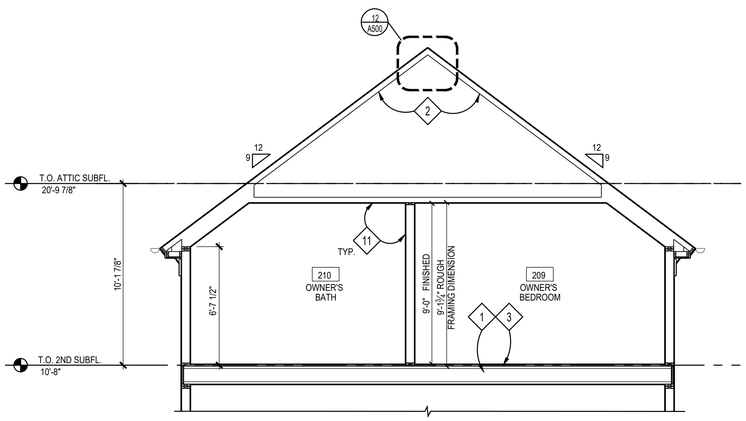

3 TRUSS PROFILE AT OWNER'S SUITE
SCALE: 1/4"=1'=0

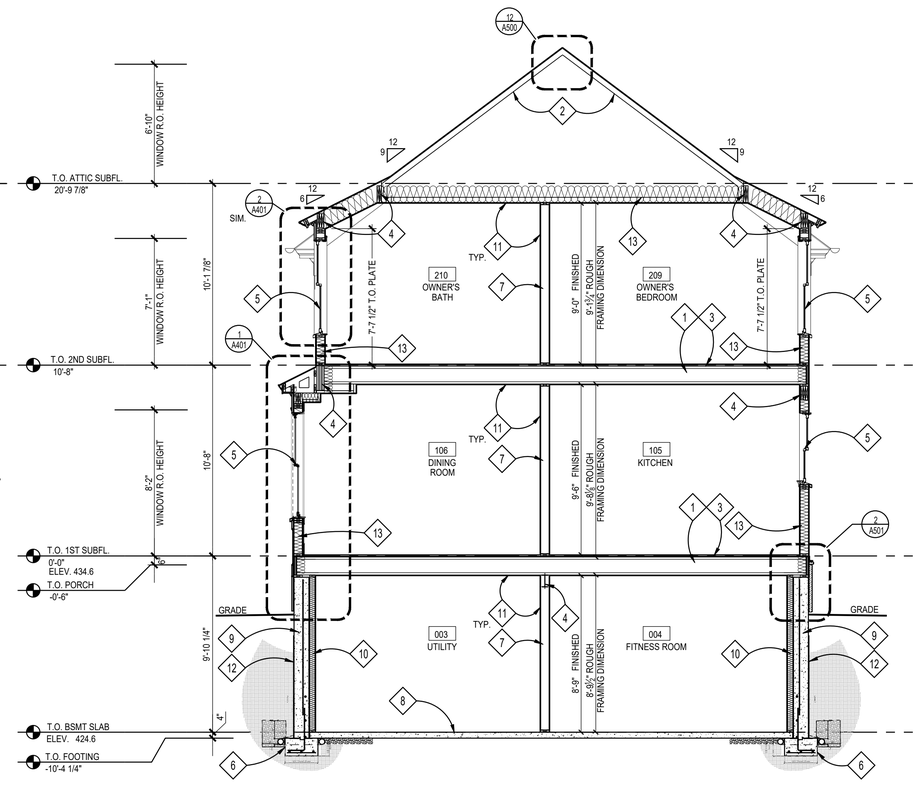

1 BUILDING SECTION
SCALE: 1/4"=1'=0

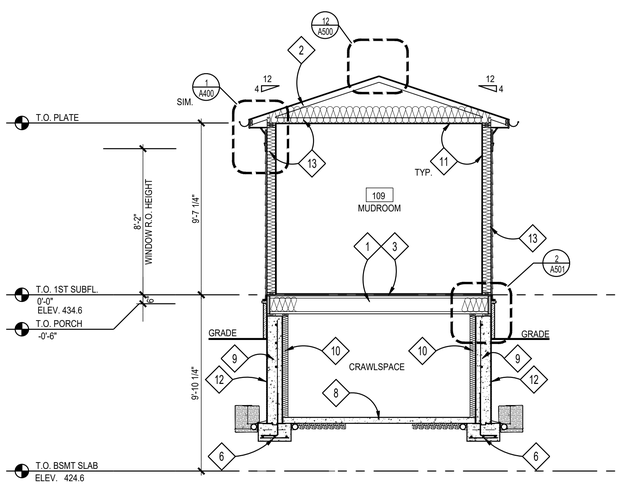

2 BUILDING SECTION
SCALE: 1/4"=1'=0

SECTION NOTES

1. FLOOR JOISTS; SEE FRAMING PLANS
2. ROOF TRUSSES BY TRUSS MANUFACTURER; SEE FRAMING PLANS
3. 3/4" ADVANTECH SUBFLOOR; GLUED & SCREWED
4. BEAM/ LINTEL/ HEADER; SEE FRAMING PLANS
5. SCHEDULED WINDOW/DOOR
6. FOOTING; SEE FOUNDATION PLAN
7. 2X6 LOAD BEARING WALL, SEE FRAMING PLANS
8. REINF. CONC. SLAB; SEE FOUNDATION PLAN
9. CONCRETE FOUNDATION WALL; SEE FOUNDATION PLAN
10. FUR OUT BASEMENT WALLS W/ 2x4's @ 16" O.C. & R-13 BATT INSULATION, TYP.
11. 1/2" GYP. BD
12. WATERPROOFING AND DRAINAGE BD TO GRADE
13. INSULATION, SEE THERMAL ENVELOPE SHEET EC001

NOTE:

1. VERIFY ALL EXTERIOR RISER & TREAD DIMENSIONS IN FIELD
2. ALL EXTERIOR WOOD TRIM TO BE TREATED FOR PROTECTION AGAINST MOISTURE, ROT, FUNGAL ATTACK & INSECTS, WINDSOR-ONE+, LIFESPAN OR EQ.
3. (T) = TEMPERED GLASS
   (E) = EGRESS

REVIEWED
By Michael Kyne at 2:21 pm, May 23, 2022

APPROVED
Montgomery County
Historic Preservation Commission

GTM ARCHITECTS

7735 OLD GEORGETOWN ROAD
SUITE 700
BETHESDA, MD 20814
(240)333-2000
(240)333-2001 FAX
WWW.GTMARCHITECTS.COM

Seal

STATE OF MARYLAND
LEO ONEILL WHITE
No. 15816
ARCHITECT

I certify that these documents were prepared or approved by me, and that I am a duly licensed architect under the laws of the State of Maryland, license number 15816, Expiration Date: 12/06/2022.

Consultant

Project
19 HIGH ST
LOT 4

Owner

Developer

PERMIT SET	04/11/2022

Issue Description	*Date*

GTM Project No.	18.0320
Checked By	GTM
Drawn By	LEO/NW
Scale	AS NOTED

Sheet Title

BUILDING SECTIONS

Sheet No.

A302

COPYRIGHT, 2019 GTM ARCHITECTS, INC.

FILE NAME:

* ALL EXTERIOR WOOD TRIM TO BE TREATED FOR PROTECTION AGAINST MOISTURE, ROT, FUNGAL ATTACK & INSECTS, WINDSOR-ONE+, LIFESPAN OR EQ.

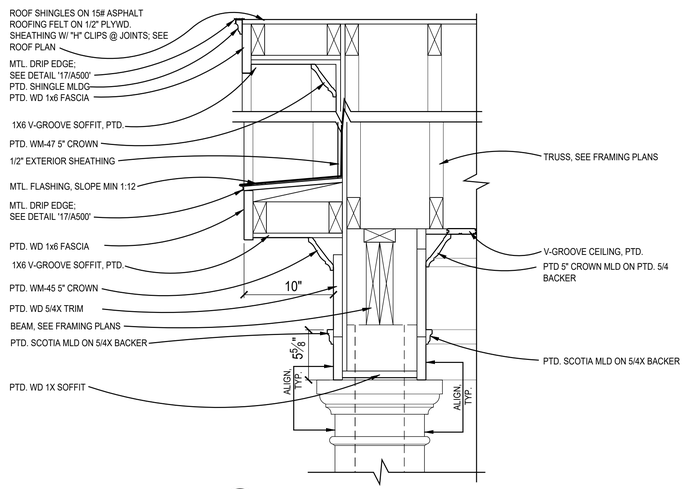

D PORCH RAKE DETAIL
SCALE: 1-1/2"=1'-0"

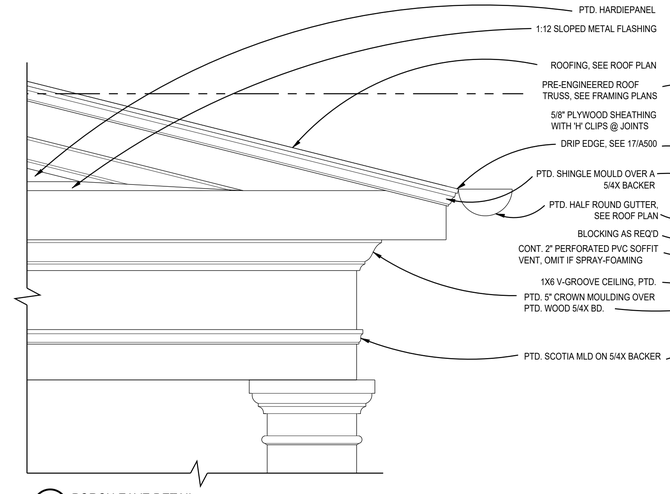

C PORCH EAVE DETAIL
SCALE: 1-1/2"=1'-0"

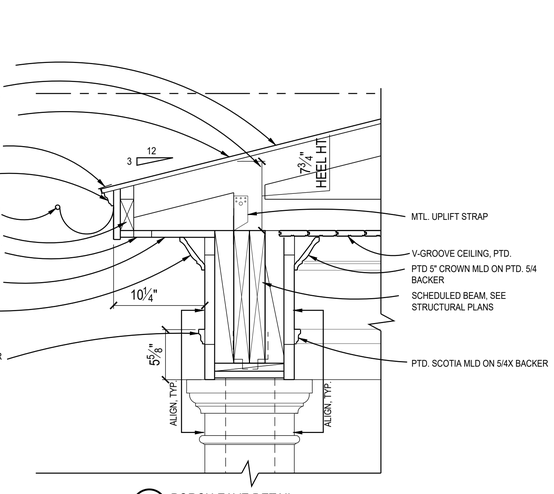

B PORCH EAVE DETAIL
SCALE: 1-1/2"=1'-0"

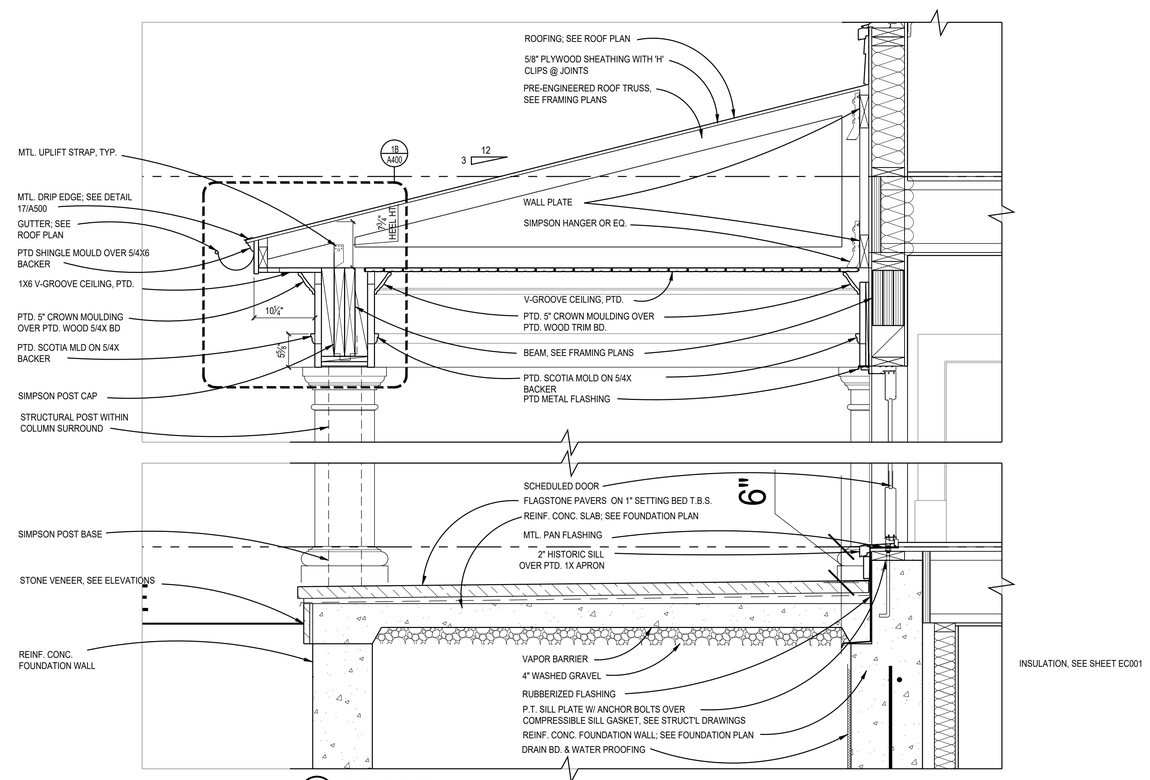

A PORCH SECTION
SCALE: 1"=1'-0"

1 FRONT PORCH DETAILS
SCALE: 1" - 1'-0"

FILE NAME:

REVIEWED
By Michael Kyne at 2:21 pm, May 23, 2022

APPROVED
Montgomery County
Historic Preservation Commission

GTM ARCHITECTS

7735 OLD GEORGETOWN ROAD
SUITE 700
BETHESDA, MD 20814
(240)333-2000
(240)333-2001 FAX
WWW.GTMARCHITECTS.COM

Seal

STATE OF MARYLAND — MICHAEL J. KYNE — 25195 — ARCHITECT

I certify that these documents were prepared or approved by me, and that I am a duly licensed architect under the laws of the State of Maryland, license number 25195. Expiration Date: 12/06/2022

Consultant

Project
19 HIGH ST
LOT 4

Owner

Developer

Issue Description	Date
PERMIT SET	04/11/2022

GTM Project No.	18.0320
Checked By	GTM
Drawn By	LEO/NW
Scale	AS NOTED

Sheet Title
EXTERIOR DETAILS

Sheet No.
A400

COPYRIGHT, 2019 GTM ARCHITECTS, INC.

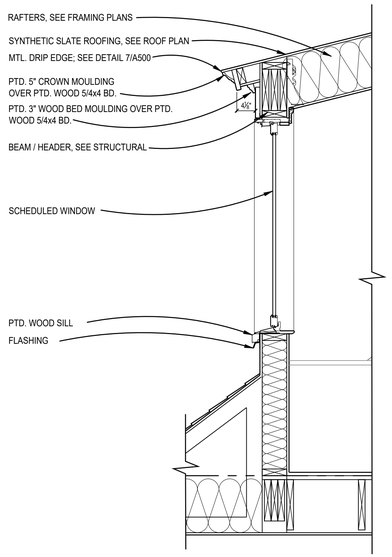

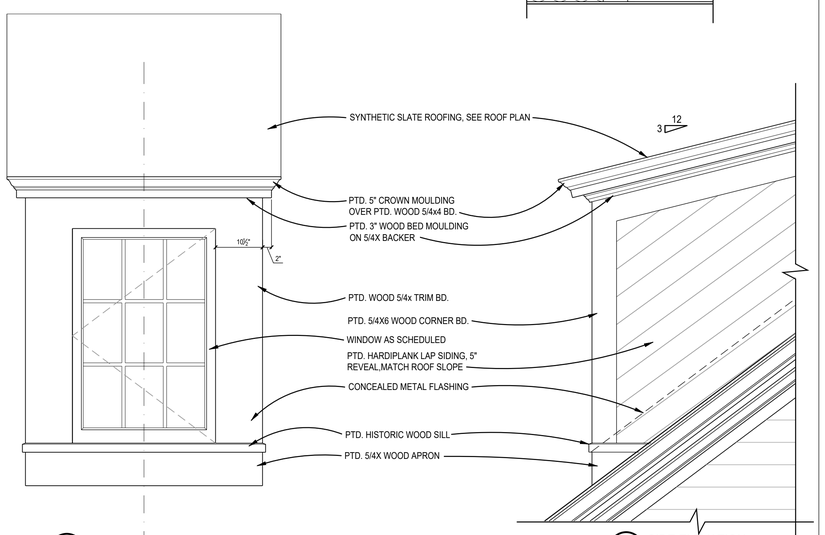

B FRONT ELEVATION
SCALE: 3/4"=1'-0"

A SIDE ELEVATION
SCALE: 3/4"=1'-0"

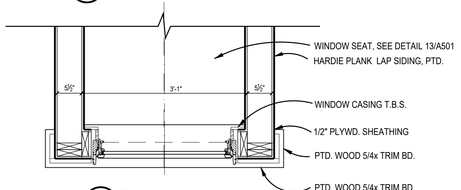

C PLAN
SCALE: 3/4"=1'-0"

2 TYP. DORMER DETAILS
SCALE: AS NOTED

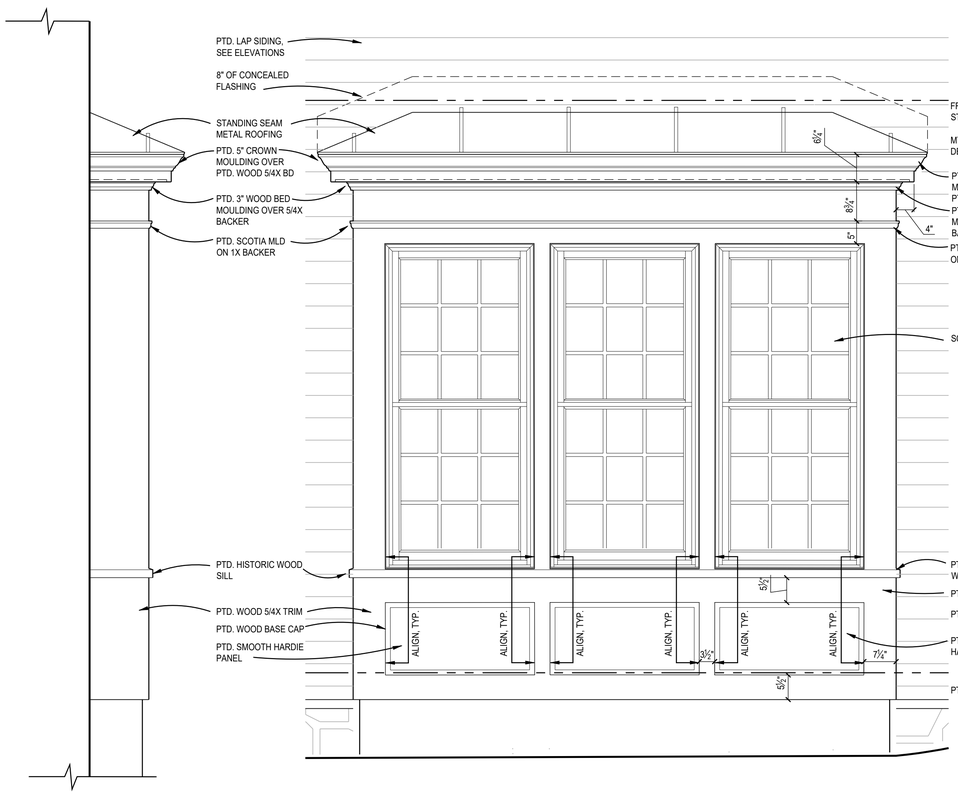

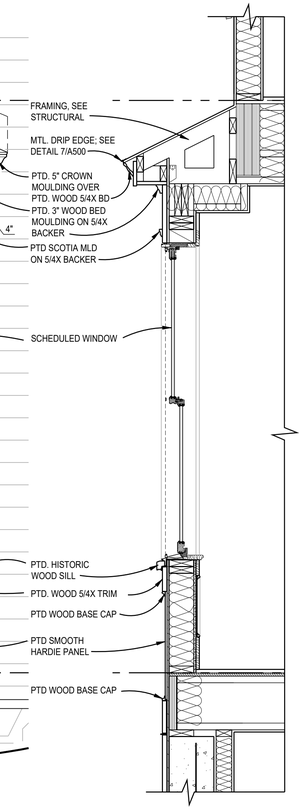

D SIDE ELEVATION
SCALE: 3/4"=1'-0"

B FRONT ELEVATION
SCALE: 3/4"=1'-0"

A SECTION
SCALE: 3/4"=1'-0"

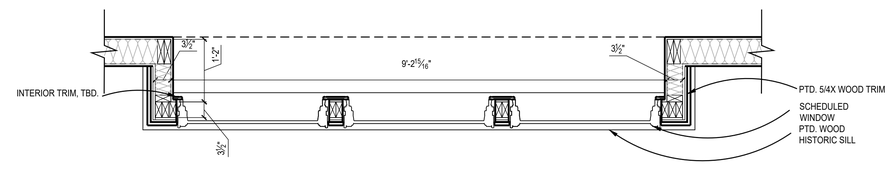

C PLAN
SCALE: 3/4"=1'-0"

1 BAY DETAILS
SCALE: AS NOTED

REVIEWED
By Michael Kyne at 2:21 pm, May 23, 2022

APPROVED
Montgomery County
Historic Preservation Commission

GTM ARCHITECTS

7735 OLD GEORGETOWN ROAD
SUITE 700
BETHESDA, MD 20814
(240)333-2000
(240)333-2001 FAX
WWW.GTMARCHITECTS.COM

Seal

I certify that these documents were prepared or approved by me, and that I am a duly licensed architect under the laws of the State of Maryland, license number 8886. Expiration Date: 12/06/2022

Consultant

Project
19 HIGH ST
LOT 4

Owner

Developer

Issue Description	Date
PERMIT SET	04/11/2022

GTM Project No.	18.0320
Checked By	GTM
Drawn By	LEO/NW
Scale	AS NOTED

Sheet Title
EXTERIOR DETAILS

Sheet No.
A401

COPYRIGHT, 2019 GTM ARCHITECTS, INC.

FILE NAME:

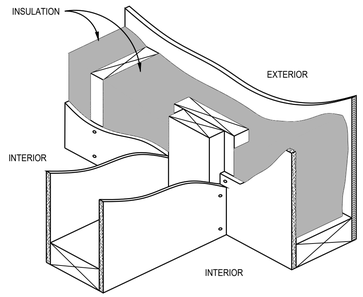

20 INTERSECTING WALL FRAMING DETAIL
SCALE: N.T.S.
R03-023 (1X1)

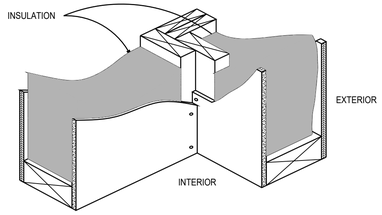

19 CORNER FRAMING DETAIL
SCALE: N.T.S.
R03-022 (1X1)

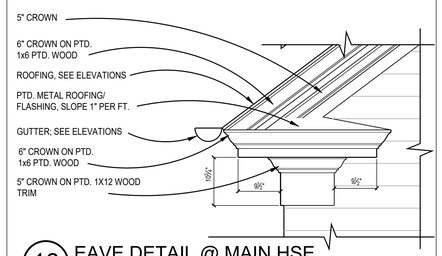

18 EAVE DETAIL @ MAIN HSE
SCALE: 3/4"=1'-0"

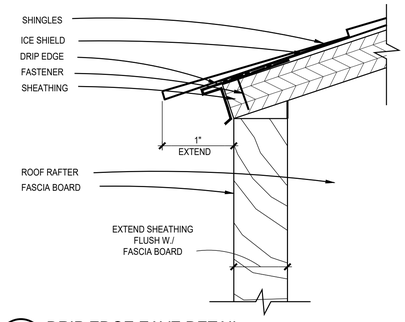

17 DRIP EDGE EAVE DETAIL
SCALE: 1"=1"
R04-051

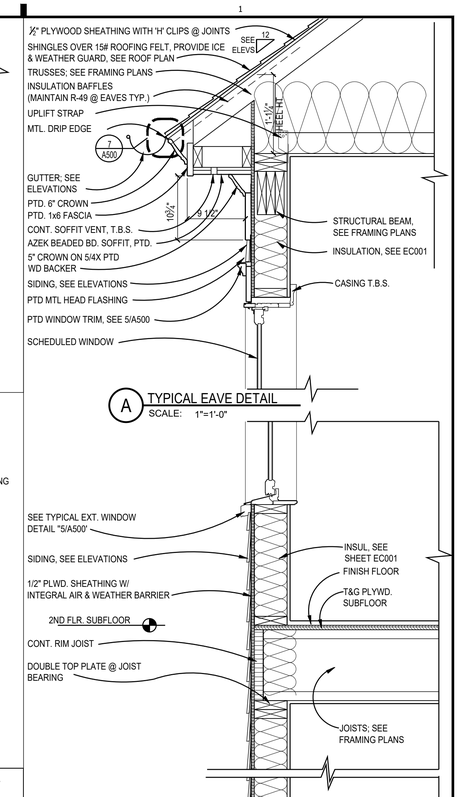

A TYPICAL EAVE DETAIL
SCALE: 1"=1'-0"

B TYPICAL FOOTING DETAIL
SCALE: 1"=1'-0"

1 TYPICAL WALL SECTION
SCALE: 1"=1'-0"
(1X4)

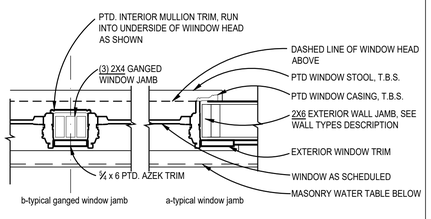

15 TYPICAL GANGED WINDOW
SCALE: 1"=1'-0"
(1X1)

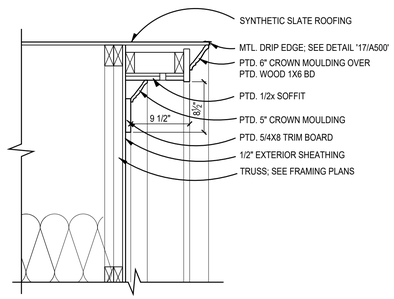

14 TYP. RAKE DETAIL
SCALE: 1" = 1'-0"
(1X1)

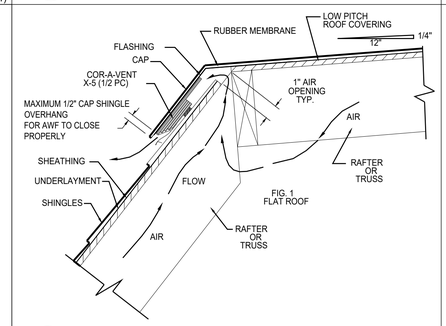

13 COR-A-VENT UN EQUAL PITCH DET.
SCALE: 13
??? (1X1)

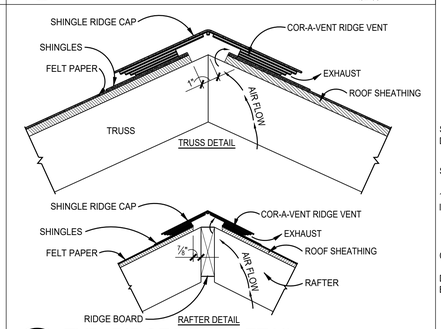

12 TYP. RIDGE VENT DETAIL
SCALE: 3"=1'-0"

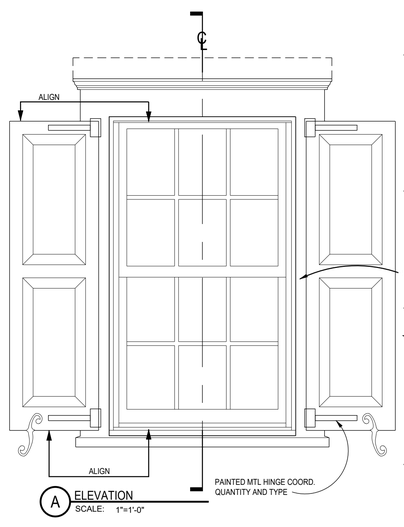

A ELEVATION
SCALE: 1"=1'-0"

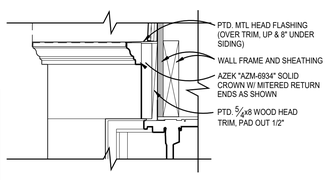

B HEAD DETAIL
SCALE: 3"=1'-0"

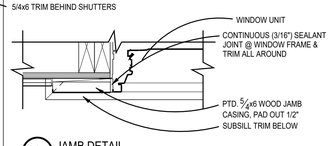

C JAMB DETAIL
SCALE: 3"=1'-0"

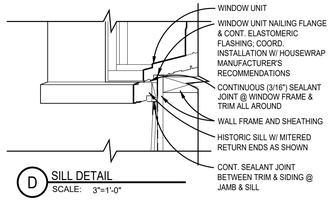

D SILL DETAIL
SCALE: 3"=1'-0"

* ALL EXTERIOR WOOD TRIM TO BE TREATED FOR PROTECTION AGAINST MOISTURE, ROT, FUNGAL ATTACK & INSECTS, WINDSOR-ONE+, LIFESPAN OR EQ.

5 TYP. EXT. WINDOW DETAILS
SCALE: AS NOTED
??? (2X2)

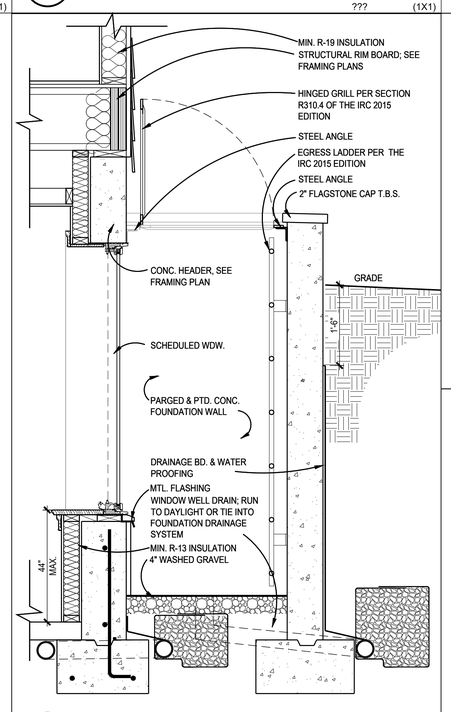

3 EGRESS WINDOW WELL DETAIL
SCALE: 3/4" = 1'-0"
(1X2)

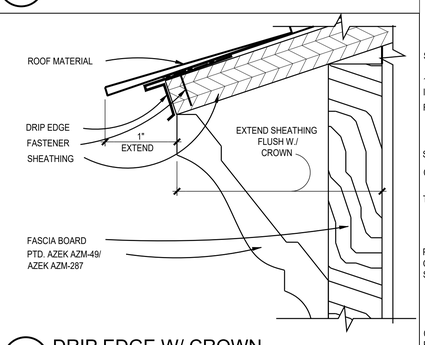

7 DRIP EDGE W/ CROWN
SCALE: 1'-0"=1'-0"
(1X1)

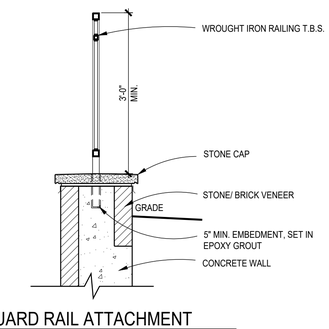

2 GUARD RAIL ATTACHMENT
SCALE: 3/4"=1'-0"

REVIEWED
By Michael Kyne at 2:21 pm, May 23, 2022

APPROVED
Montgomery County
Historic Preservation Commission

GTM ARCHITECTS
7735 OLD GEORGETOWN ROAD
SUITE 700
BETHESDA, MD 20814
(240)333-2000
(240)333-2001 FAX
WWW.GTMARCHITECTS.COM

Seal

Consultant

Project
19 HIGH ST
LOT 4

Owner

Developer

PERMIT SET	04/11/2022

Issue Description	Date

GTM Project No.	18.0320
Checked By	GTM
Drawn By	LEO/NW
Scale	AS NOTED

Sheet Title
DETAILS

Sheet No.
A500

COPYRIGHT, 2019 GTM ARCHITECTS, INC.

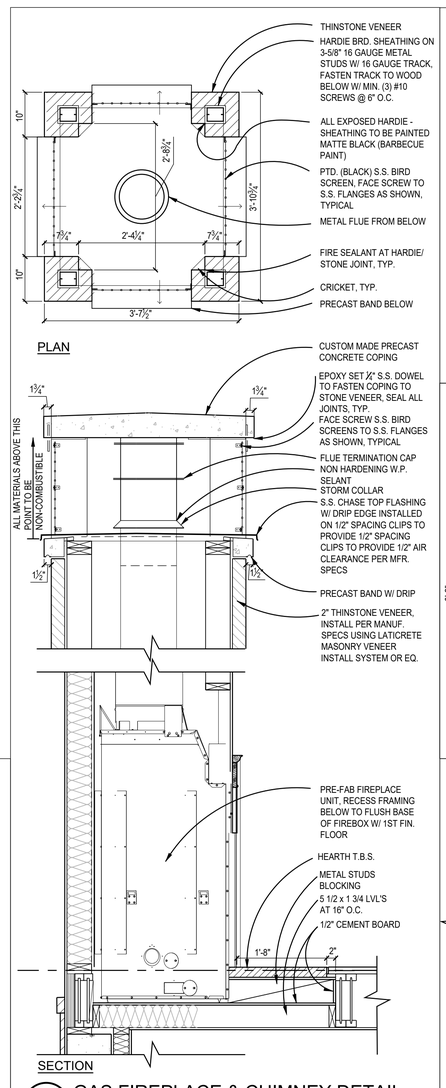

4 GAS FIREPLACE & CHIMNEY DETAIL
SCALE: 3/4"=1'-0"
??? (1X3)

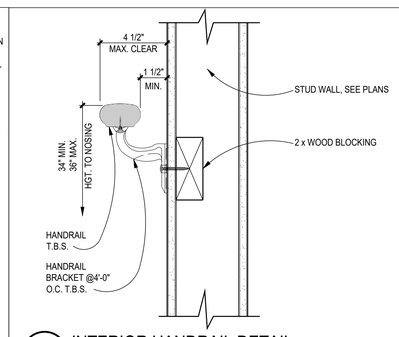

13 INTERIOR HANDRAIL DETAIL
SCALE: 3"=1'-0"
R08-044

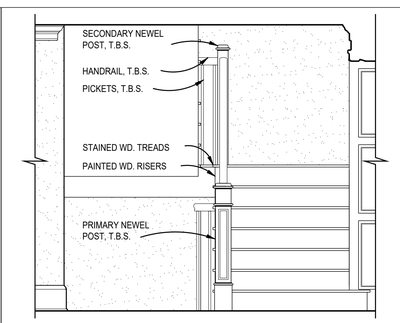

12 STAIR DETAIL
SCALE: 1/2"=1'-0"
(1X1)

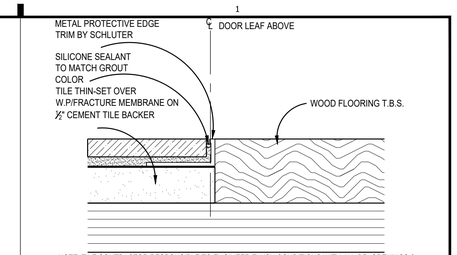

NOTE: TILE CONTRACTOR RESPONSIBLE TO ENGINEER FLUSH CONDITIONS WITH ALL DR. OPENINGS & WOOD/CARPET INSETS. & TO SUBMIT ANY DETAIL OR RAMPED THRESHOLDS TO GTM FOR APPROVAL. TILE CONTRACTOR RESPONSIBLE TO PREP & INSTALL ALL TILE MATERIALS, & TO KEEP PREMISES CLEAN DURING & AFTER INSTALLATION. TILE CONTRACTOR RESPONSIBLE TO GROUT & SEAL FINISHED INSTALLATION. & SUBMIT COLORS FOR GROUTING MATERIALS TO GTM FOR APPROVAL, & PROVIDE SPEC SHEETS ON SEALANTS, ALONG WITH MAINTENANCE SPECS. FOR FLOOR AREAS W/ RADIUS, USE EDGE TRIM W/ RADIUS PERFORATIONS, SCHLUTER "SCHIENE" OR SIM.

16 TILE-TO-WOOD TRANSITION
SCALE: 12"=1'-0"
R06-050 (1X1)

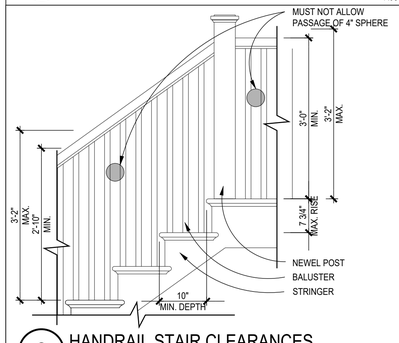

8 HANDRAIL STAIR CLEARANCES
SCALE: 3/4"=1'-0"
R08-045

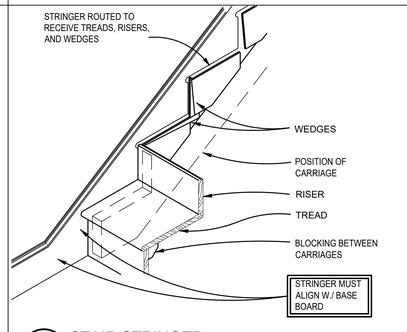

7 STAIR STRINGER
SCALE: 1"=1'-0"

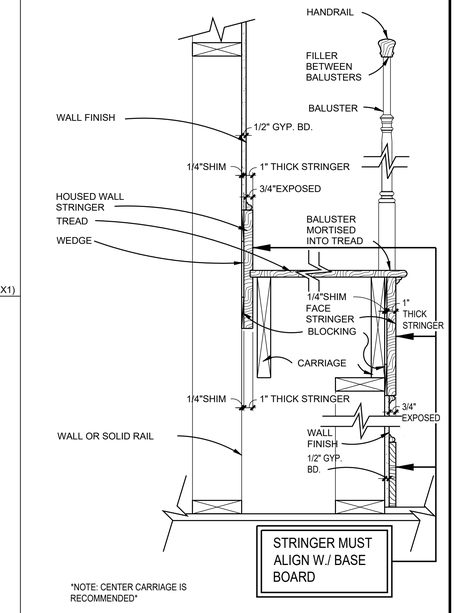

6 TYP. WOOD STAIR TRIM DETAIL
SCALE: 1 1/2"=1'-0"

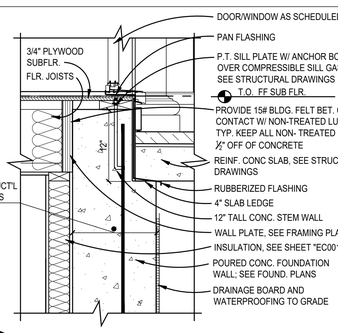

5 REVERSE LEDGE DETAIL
SCALE: 1"=1'-0"

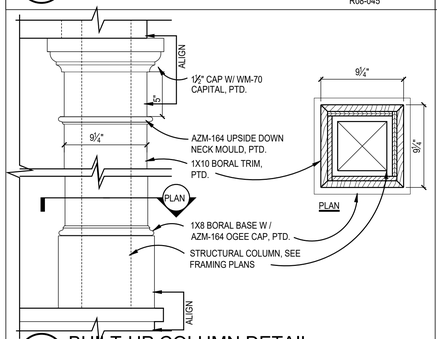

3 BUILT-UP COLUMN DETAIL
SCALE: 1 1/2" =1'-0"

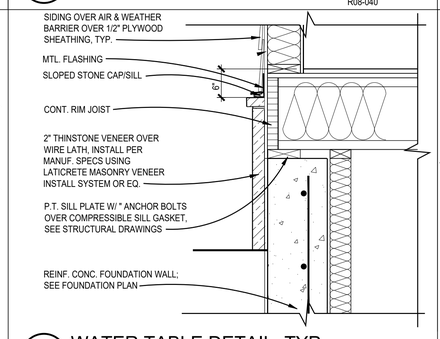

2 WATER TABLE DETAIL, TYP.
SCALE: 1"=1'-0"
R08-040
(1X1)

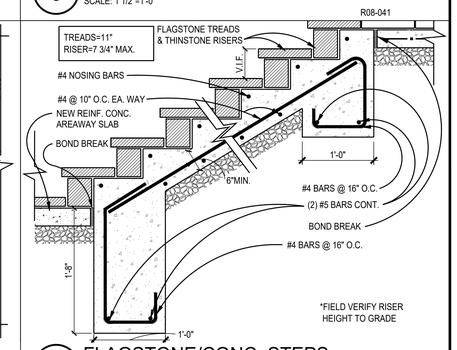

1 FLAGSTONE/CONC. STEPS
SCALE: 1"=1'-0"
R08-041

REVIEWED
By Michael Kyne at 2:21 pm, May 23, 2022

APPROVED
Montgomery County
Historic Preservation Commission

GTM ARCHITECTS
7735 OLD GEORGETOWN ROAD
SUITE 700
BETHESDA, MD 20814
(240)333-2000
(240)333-2001 FAX
WWW.GTMARCHITECTS.COM

Seal

I certify that these documents were prepared or approved by me, and that I am a duly licensed architect under the laws of the State of Maryland, license number 8886. Expiration Date: 12/06/2022

Consultant

Project
19 HIGH ST
LOT 4

Owner

Developer

PERMIT SET	04/11/2022

Issue Description	*Date*

GTM Project No.	18.0320
Checked By	GTM
Drawn By	LEO/NW
Scale	AS NOTED

Sheet Title
DETAILS

Sheet No.
A501

COPYRIGHT, 2019 GTM ARCHITECTS, INC.

FILE NAME:

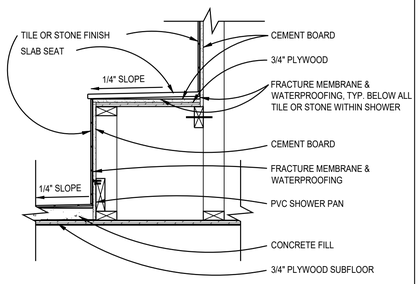

20 SECTION @ SHOWER BENCH
SCALE: 1"=1'-0"
R06-046

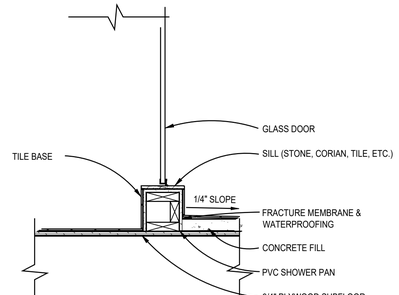

19 SECTION @ SHOWER CURB
SCALE: 1"=1'-0"
R06-047

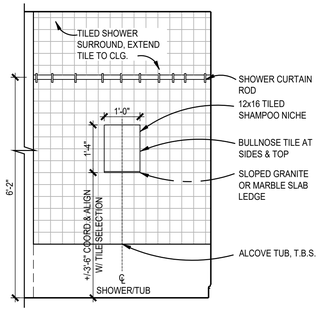

18 TILED RECESS DETAIL
SCALE: 1/2"=1'-0"
(1X1)

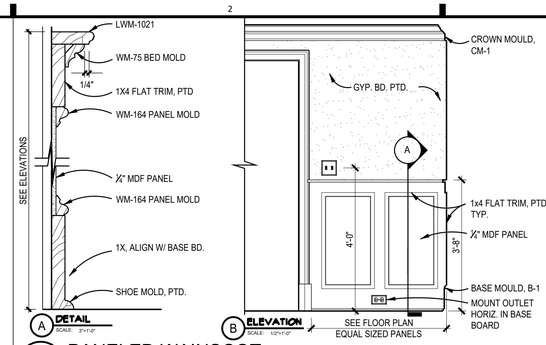

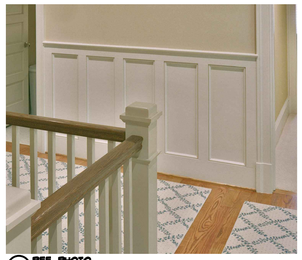

REF. PHOTO

15 PANELED WAINSCOT
SCALE: AS NOTED

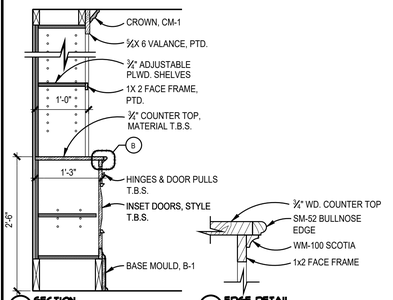

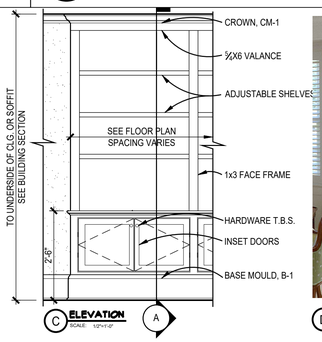

REF. PHOTO

15 BOOK CASE DETAIL
SCALE: AS NOTED

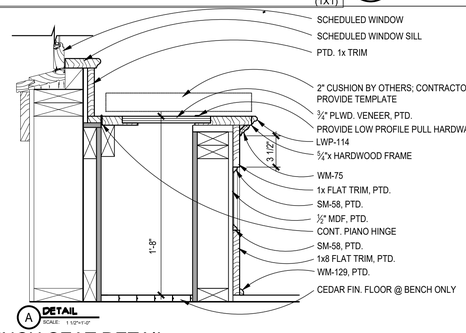

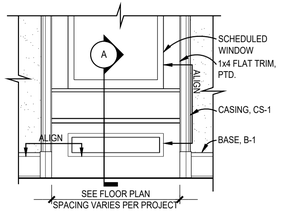

13 BENCH SEAT DETAIL
SCALE: AS NOTED
(1X1)
(3X1)

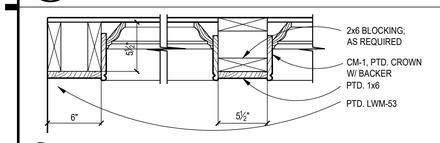

REF. PHOTO

10 COFFERED CEILING DETAIL
SCALE: 1 1/2" = 1'-0"
(1X1)

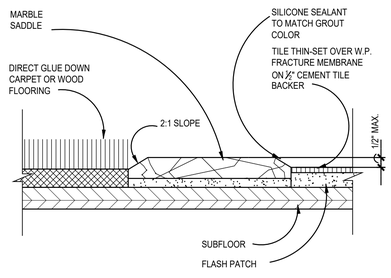

9 THRESHOLD DETAIL
SCALE: N.T.S.
S14-003 (1X1)

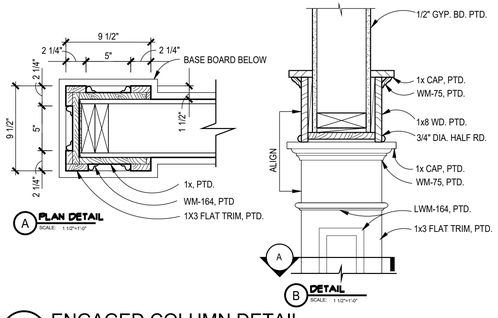

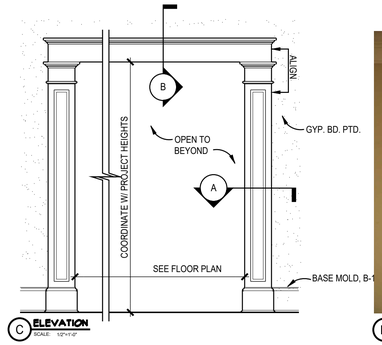

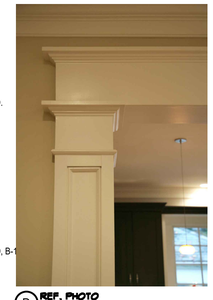

REF. PHOTO

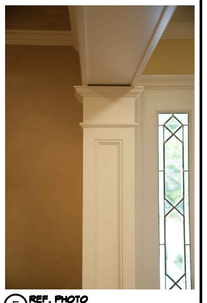

REF. PHOTO

8 ENGAGED COLUMN DETAIL
SCALE: AS NOTED

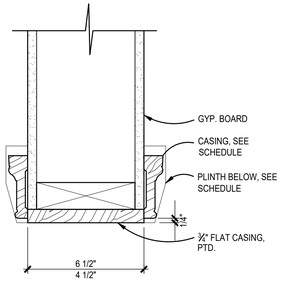

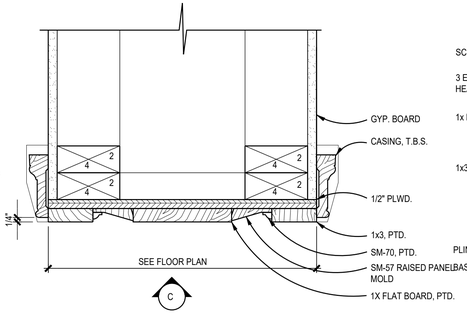

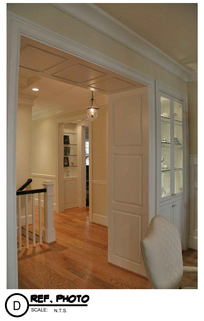

REF. PHOTO

5 CASED OPENING DETAILS
SCALE: AS NOTED

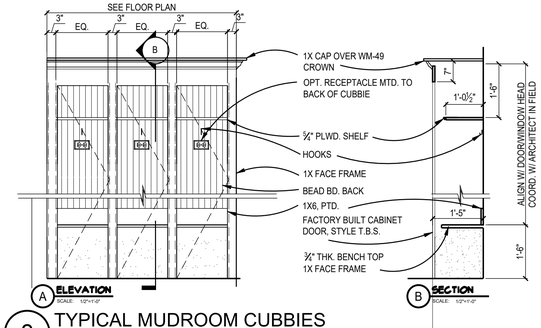

REF. PHOTO

2 TYPICAL MUDROOM CUBBIES
SCALE: 1/2"=1'-0"

FILE NAME:

REVIEWED
By Michael Kyne at 2:21 pm, May 23, 2022

APPROVED
Montgomery County
Historic Preservation Commission

GTM ARCHITECTS
7735 OLD GEORGETOWN ROAD
SUITE 700
BETHESDA, MD 20814
(240)333-2000
(240)333-2001 FAX
WWW.GTMARCHITECTS.COM

Seal

Consultant

Project
19 HIGH ST
LOT 4

Owner

Developer

PERMIT SET	04/11/2022

Issue Description	Date

GTM Project No.	18.0320
Checked By	GTM
Drawn By	LEO/NW
Scale	AS NOTED

Sheet Title
DETAILS

Sheet No.
A502

COPYRIGHT, 2019 GTM ARCHITECTS, INC.

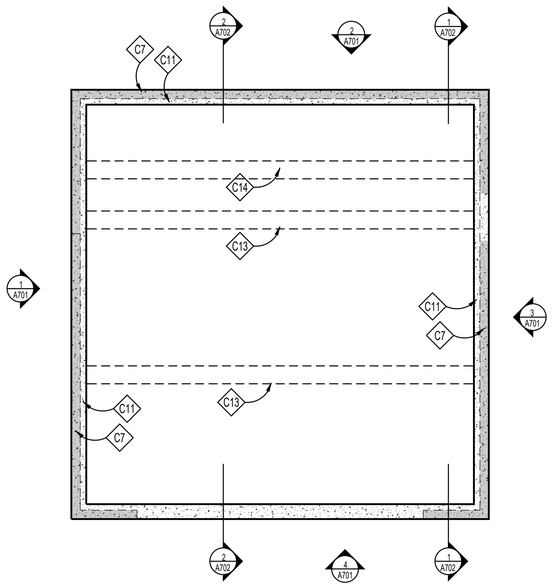

1 GARAGE LOWER LEVEL PLAN
Scale: 1/4"=1'-0"

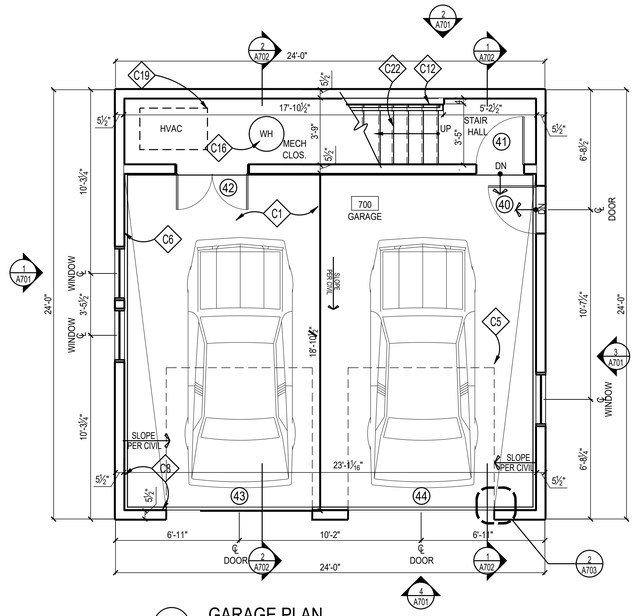

2 GARAGE PLAN
Scale: 1/4"=1'-0"

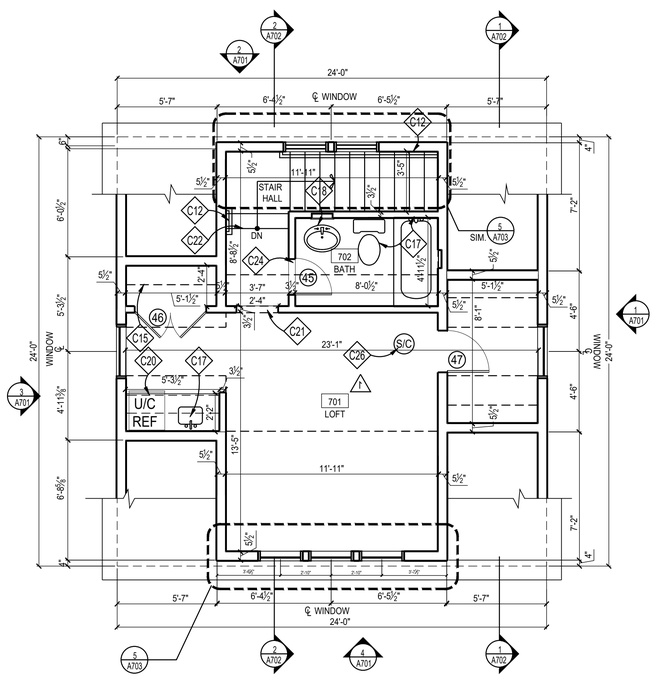

3 GARAGE ATTIC PLAN
Scale: 1/4"=1'-0"

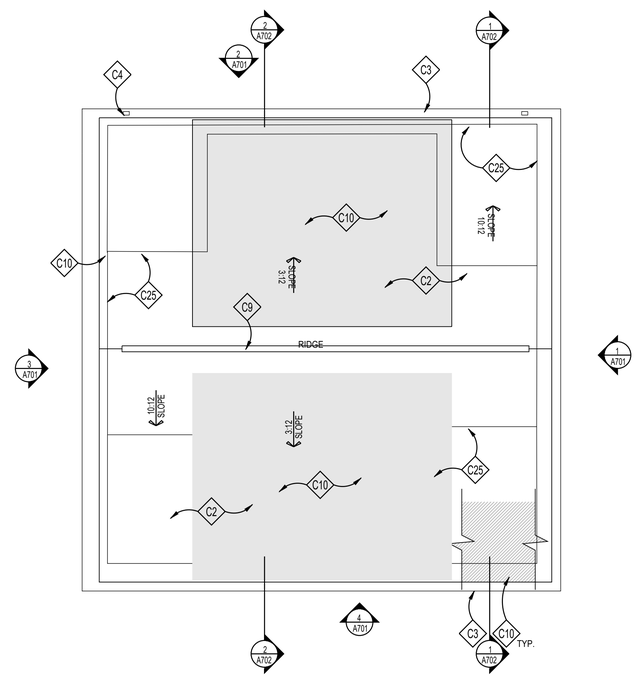

4 GARAGE ROOF PLAN
Scale: 1/4"=1'-0"

CONSTRUCTION NOTES

- C1 REINF. CONC. SLAB; SEE STRUCTURAL PLANS
- C2 ROOF SHINGLES TO MATCH MAIN HOUSE; SEE GENERAL ROOFING NOTES, THIS SHEET
- C3 GUTTER TO MATCH MAIN HOUSE
- C4 DOWNSPOUT TO MATCH MAIN HOUSE, TERMINATED IN PERFORATED PIPE; EXTEND BELOW GRADE; DRAIN TO DAYLIGHT OR SUMP PUMP
- C5 GARAGE DOOR TRACKS ABOVE
- C6 CONC. CURB BELOW
- C7 CONCRETE FOUNDATION WALL; SEE STRUCTURAL PLANS
- C8 PROVIDE 5/8" TYPE "X" GYP. BRD ON WALLS AND CEIILING OF GARAGE; SEPARATING ALL HABITABLE ROOMS FROM GARAGE & PER IRC T-302.1(1); SEE DTL 5/A703 FOR EXTERIOR WALLS
- C9 RIDGE/HIP VENTS BY COR-A-VENT OR APPROVED EQUAL REMOVE WITH THE USAGE OF FOAM INSULATION
- C10 ICE AND WATER GUARD AT ALL EAVES, VALLEYS AND LOW SLOPE ROOFS; SEE GENERAL ROOFING NOTE #1 BELOW
- C11 PROVIDE 4" SLAB BEARING LEDGE
- C12 HANDRAIL @ 34" ABOVE NOSING PER IRC 2018; HANDRAIL GRIP SIZE PER CODE
- C13 DASHED LINE OF GRADE BEAM ABOVE, SEE FOUNDATION PLANS
- C14 DASHED LINE OF THICKENED SLAB AT INTERIOR BEARING WALL AND TURNDOWN SLAB ABOVE
- C15 TYP. CLOSET SHELVES + RODS
- C16 PROVIDE TANKLESS WATER HEATER T.B.S., RINNAI OR EQ.
- C17 PLUMBING FIXTURES, & ACCESSORIES T.B.S. BY OWNER, TYP.
- C18 VANITY WITH SINK, FAUCET AND COUNTERTOP, T.B.S.
- C19 CONDITION SPACE WITH DUCTLESS MINI-SPLIT SYSTEM, GC TO COORDINATE FINAL LOCATION WITH OWNER
- C20 CABINETS,COUNTERTOPS & APPLIANCES, T.B.S. FINAL LAYOUT TO BE DETERMINED BY KITCHEN DESIGNER & APPROVED BY OWNER.
- C21 CASED OPENING; HEAD TO ALIGN WITH DOOR AND WINDOW HEAD HEIGHT, SEE DETAIL 18/A307
- C22 WD. STEPS; 1x RISERS W/ TREADS TO MATCH H.W.F.; RAILING T.B.S, SEE DETAILS 4,5&9/A307. FOLLOW IRC 2018 R311.7
- C23 PROVIDE OVERFLOW FLOOR PAN & FLOOR DRAIN UNDER WASHING MACHINE
- C24 MARBLE THRESHOLD T.B.S, SEE DETAIL 3/A307
- C25 LINE OF FRAME WALL BELOW
- C26 HARDWIRED WITH BATTERY BACK UP SMOKE DETECTOR/ CARBON MONOXIDE COMBO UNIT PER IRC 2018

ROOFING NOTES

1. MEMBRANE ROOF SHALL BE 60 MIL, WHITE PVC, ASTM D 4434, TYPE III, FABRIC REINFORCED. THE MEMBRANE SHALL BE ADHERED TO MECHANICALLY FASTENED, POLYISOCYANURATE BOARD INSULATION ASTM C 1289, FELT OR GLASS-FIBER MAT FACER ON BOTH MAJOR SURFACES. TAPERED INSULATION SHALL BE FACTORY-MADE TO A MINIMUM SLOPE OF 1/4" PER FOOT. INSULATION SHALL BE INSTALLED IN TWO LAYERS WITH JOINTS STAGGERED.
2. PROVIDE FLASHING FOR MIN. 8" EACH SIDE OF ALL VALLEYS & PITCH CHANGES

WALL TYPES

TYPICAL EXTERIOR WALL: SEE DETAIL 5 BELOW

TYPICAL NON-BEARING INTERIOR PARTITION: 2x4 WD. STUDS @ 16" O.C. W/ 1/2" GYP. BD. EACH SIDE; INCREASE WALL THICKNESS AS SHOWN TO ALIGN FINISHES WHERE SHOWN.

GENERAL NOTES

1. UNLESS INDICATED OTHERWISE, DIMENSIONS ARE TO FACE OF FRAMING.
2. VERIFY ALL EXTERIOR RISER + TREAD DIMENSIONS IN THE FIELD.

REVIEWED
By Michael Kyne at 2:21 pm, May 23, 2022

APPROVED
Montgomery County
Historic Preservation Commission

GTM ARCHITECTS

7735 OLD GEORGETOWN ROAD
SUITE 700
BETHESDA, MD 20814
(240)333-2000
(240)333-2001 FAX
WWW.GTMARCHITECTS.COM

Seal

STATE OF MARYLAND — MICHAEL LEO KYNE — ARCHITECT

I certify that these documents were prepared or approved by me, and that I am a duly licensed architect under the laws of the State of Maryland, license number 5886. Expiration Date: 12/06/2022

Consultant

Project
19 HIGH ST
LOT 4

Owner

Developer

Issue Description	Date
PERMIT SET	04/11/2022

GTM Project No.	18.0320
Checked By	GTM
Drawn By	LEO/NW
Scale	AS NOTED

Sheet Title
GARAGE PLANS

Sheet No.
A700

COPYRIGHT, 2019 GTM ARCHITECTS, INC.

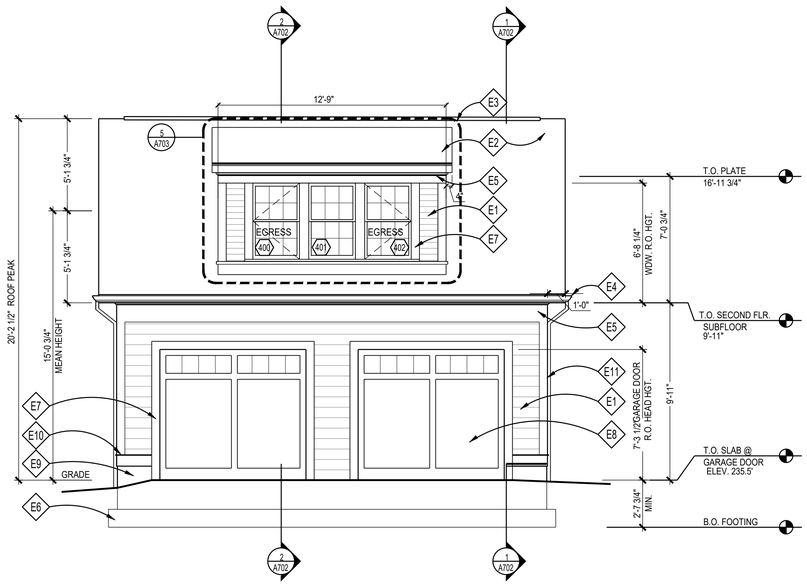

4 FRONT ELEVATION
SCALE: 1/4"=1'-0"

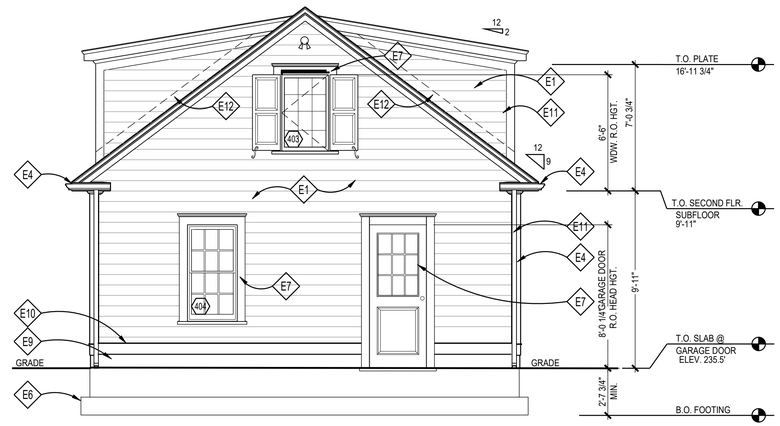

3 RIGHT SIDE ELEVATION
SCALE: 1/4"=1'-0"

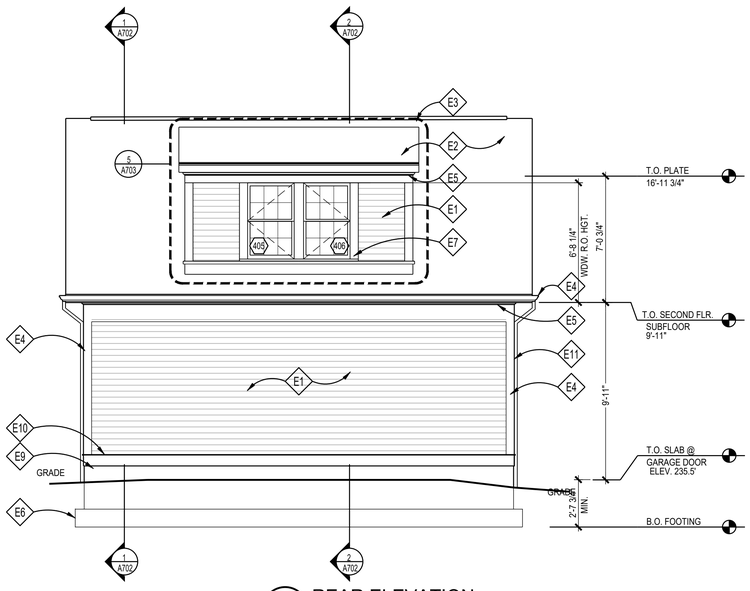

2 REAR ELEVATION
SCALE: 1/4"=1'-0"

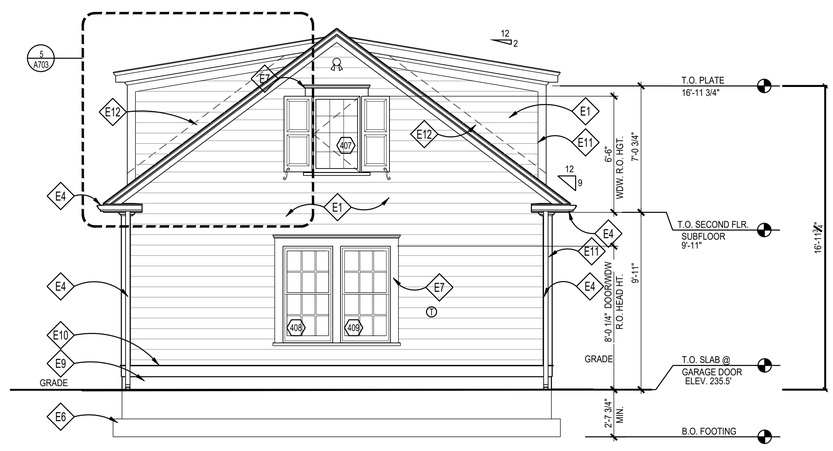

1 LEFT SIDE ELEVATION
SCALE: 1/4"=1'-0"

ELEVATION NOTES

- E1 HARDI-PLANK SMOOTH LAP SIDING, 5" EXPOSURE, INSTALL PER MANUFACTURER, PTD.
- E2 STANDING SEAM METAL ROOFING
- E3 RIDGE/HIP VENT BY COR-A-VENT OR APPROVED EQUAL
- E4 GUTTER & D.S.; MATERIAL & COLOR TO MATCH HOUSE
- E5 PTD. 5/4x WOOD W/ WM-47 CROWN
- E6 LINE OF FOOTING BELOW, TYP.
- E7 PAINTED WOOD 5/4x6 WINDOW/DOOR TRIM, TYP.; SEE GENERAL PAINTED WOOD NOTES
- E8 PAINT-GRADE GARAGE DOOR, TBS.
- E9 PAINTED AND PARGED CONCRETE FOUNDATION
- E10 PTD. 5/4x10 WOOD W/ WM-197 DRIP CAP, SEE GENERAL NOTES THIS SHEET
- E11 PTD. PAINTED WOOD 5/4x6 CORNER BOARDS.; SEE GENERAL WOODEN TRIM NOTES, THIS SHEET
- E12 CONCEALED MTL FLASHING AT ALL VERTICAL TRANSITIONS, EXTEND MIN 8" UP WALL BEHIND SIDING.

NOTE:
VERIFY ALL EXTERIOR RISER & TREAD DIMENSIONS IN FIELD.

GENERAL WOOD TRIM NOTES

ALL WOOD TRIM (CORNERBOARDS, FRIEZE BOARDS, SOFFITS, WINDOW CASING, SKIRTBOARDS, APRONS, ETC.) TO BE WINDSOR-ONE+ OR APPROVED EQ. PRIME ALL END CUTS & INSTALL PER MANUFACTURES INSTRUCTIONS.

REVIEWED
By Michael Kyne at 2:21 pm, May 23, 2022

APPROVED
Montgomery County
Historic Preservation Commission

GTM ARCHITECTS

7735 OLD GEORGETOWN ROAD
SUITE 700
BETHESDA, MD 20814
(240)333-2000
(240)333-2001 FAX
WWW.GTMARCHITECTS.COM

Seal

STATE OF MARYLAND · MICHAEL A. KYNE · 19733 · ARCHITECT

I certify that these documents were prepared or approved by me, and that I am a duly licensed architect under the laws of the State of Maryland, license number 8886, Expiration Date: 12/06/2022.

Consultant

Project
19 HIGH ST
LOT 4

Owner

Developer

Issue Description	Date
PERMIT SET	04/11/2022

GTM Project No.	18.0320
Checked By	GTM
Drawn By	LEO/NW
Scale	AS NOTED

Sheet Title
GARAGE ELEVATIONS

Sheet No.
A701

COPYRIGHT, 2019 GTM ARCHITECTS, INC.

FILE NAME:

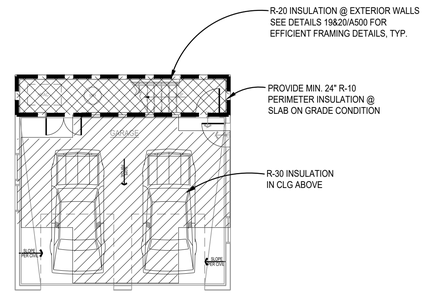

3 GARAGE THERMAL ENVELOPE PLAN
Scale: 1/8"=1'-0"

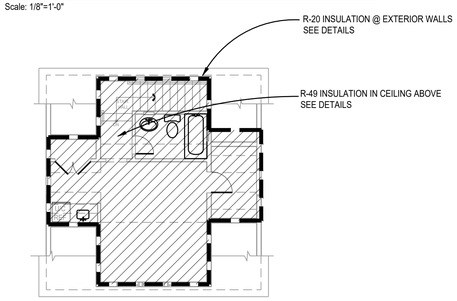

4 GARAGE ATTIC THERMAL ENVELOPE PLAN
Scale: 1/8"=1'-0"

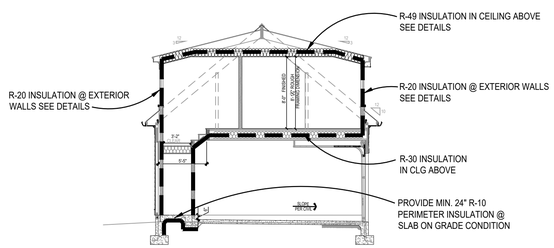

5 GARAGE THERMAL ENVELOPE SECTION
Scale: 1/8"=1'-0"

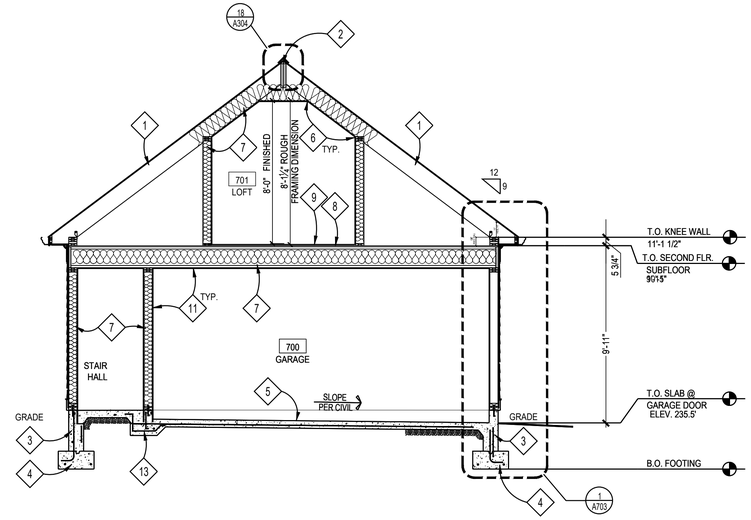

1 GARAGE SECTION
SCALE: 1/4"=1'-0"

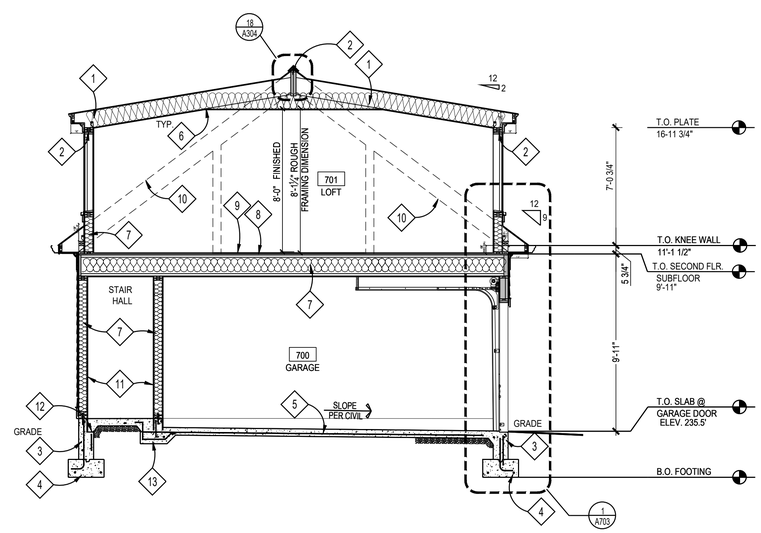

1 GARAGE SECTION
SCALE: 1/4"=1'-0"

SECTION NOTES

1. RAFTERS, SEE FRAMING PLANS
2. BEAM/ LINTEL/ HEADER; SEE FRAMING PLANS
3. CONCRETE FOUNDATION WALL; SEE FOUNDATION PLAN
4. FOOTING; SEE FOUNDATION PLAN
5. REINF. CONC. SLAB; SEE FOUNDATION PLAN
6. 1/2" GYP. BD, TYP.
7. INSULATION (SEE THERMAL ENVELOPE DIAGRAMS, THIS SHEET, FOR INSULATION INFORMATION)
8. FLOOR JOISTS; SEE FRAMING PLANS
9. 3/4" T&G PLYWD. SUBFLOOR; GLUED & SCREWED
10. DASHED LINE OF RAFTER/ROOF LINE BEYOND
11. 5/8" TYPE 'X' GYP. BD.
12. SLAB LEDGE; SEE STRUCTURAL DRAWINGS
13. TURNDOWN SLAB; SEE STRUCTURAL DRAWINGS

NOTE:
VERIFY ALL EXTERIOR RISER AND TREAD DIMENSIONS IN FIELD.

REVIEWED
By Michael Kyne at 2:21 pm, May 23, 2022

APPROVED
Montgomery County
Historic Preservation Commission

GTM ARCHITECTS
7735 OLD GEORGETOWN ROAD
SUITE 700
BETHESDA, MD 20814
(240)333-2000
(240)333-2001 FAX
WWW.GTMARCHITECTS.COM

Seal

Consultant

Project
19 HIGH ST
LOT 4

Owner

Developer

PERMIT SET	04/11/2022
Issue Description	Date

GTM Project No.	18.0320
Checked By	GTM
Drawn By	LEO/NW
Scale	AS NOTED

Sheet Title
GARAGE
SECTIONS &
TE DIAGRAMS

Sheet No.
A702

COPYRIGHT, 2019 GTM ARCHITECTS, INC.

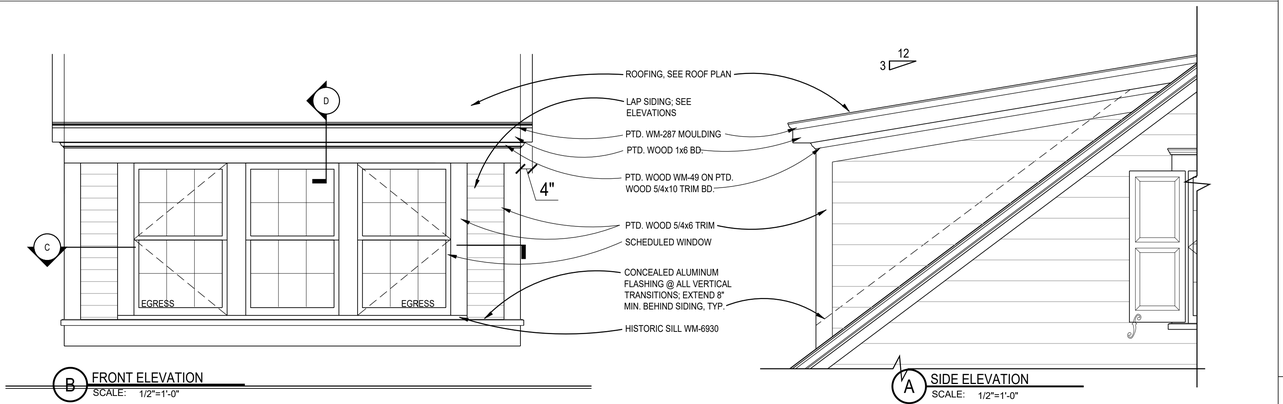

B FRONT ELEVATION
SCALE: 1/2"=1'-0"

A SIDE ELEVATION
SCALE: 1/2"=1'-0"

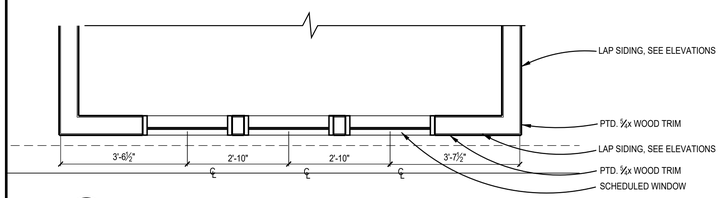

C PARTIAL FLOOR PLAN
SCALE: 1/2"=1'-0"

5 DORMER DETAILS
SCALE: AS NOTED

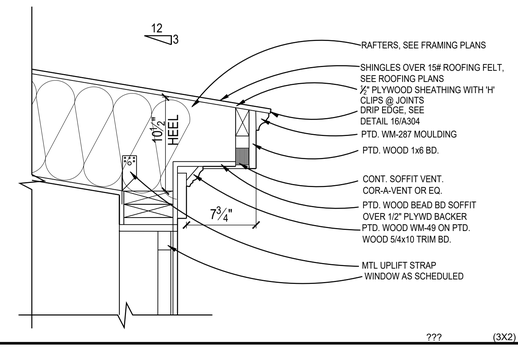

??? (3X2)

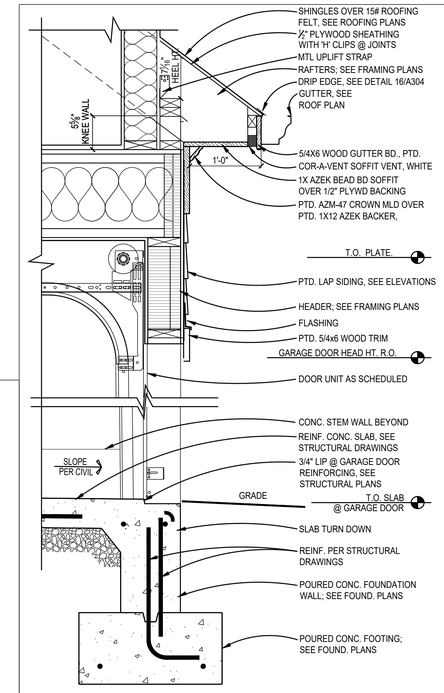

7 TYP. GARAGE DOOR DETAIL
SCALE: 1"=1'-0"

(1X2)

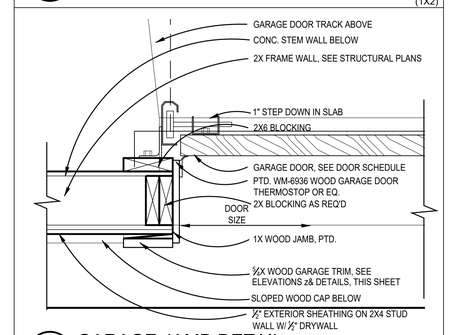

2 GARAGE JAMB DETAIL
SCALE: 1 1/2"=1'-0"

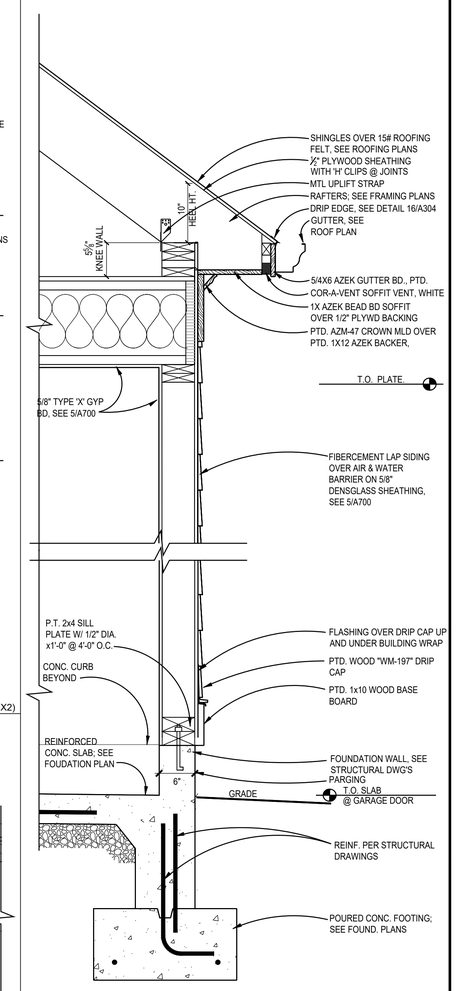

1 TYPICAL WALL SECTION
SCALE: 1"=1'-0"

??? (1X3)

REVIEWED
By Michael Kyne at 2:21 pm, May 23, 2022

APPROVED
Montgomery County
Historic Preservation Commission

GTM ARCHITECTS

7735 OLD GEORGETOWN ROAD
SUITE 700
BETHESDA, MD 20814
(240)333-2000
(240)333-2001 FAX
WWW.GTMARCHITECTS.COM

Seal

I certify that these documents were prepared or approved by me, and that I am a duly licensed architect under the laws of the State of Maryland, license number 8886. Expiration Date: 12/06/2022.

Consultant

Project
19 HIGH ST
LOT 4

Owner

Developer

PERMIT SET	04/11/2022

Issue Description	*Date*

GTM Project No.	18.0320
Checked By	GTM
Drawn By	LEO/NW
Scale	AS NOTED

Sheet Title
GARAGE DETAILS

Sheet No.
A703

COPYRIGHT, 2019 GTM ARCHITECTS, INC.

FILE NAME:

5 | 4 | 3 | 2 | 1

D

C

B

A

FILE NAME:

Generated by RES*check-Web* Software

Compliance Certificate

Project 18.0320_19 HIGH ST. LOT 4_GARAGE

Energy Code: **2018 IECC**
Location: **Brookeville, Maryland**
Construction Type: **Single-family**
Project Type: **New Construction**
Conditioned Floor Area: **1,940 ft2**
Glazing Area **4%**
Climate Zone: **4 (5093 HDD)**
Permit Date:
Permit Number:

Construction Site: Owner/Agent: Alabama Designer/Contractor: Alabama

Compliance: Passes using UA trade-off

Compliance: **0.0% Better Than Code** Maximum UA: **114** Your UA: **114** Maximum SHGC: **0.40** Your SHGC: **0.18**

The % Better or Worse Than Code Index reflects how close to compliance the house is based on code trade-off rules. It DOES NOT provide an estimate of energy use or cost relative to a minimum-code home.

Slab-on-grade tradeoffs are no longer considered in the UA or performance compliance path in REScheck. Each slab-on-grade assembly in the specified climate zone must meet the minimum energy code insulation R-value and depth requirements.

Envelope Assemblies

Assembly	Gross Area or Perimeter	Cavity R-Value	Cont. R-Value	Prop. U-Factor	Req. U-Factor	Prop. UA	Req. UA
Ceiling: Flat Ceiling or Scissor Truss	411	49.0	0.0	0.026	0.026	11	11
ceiling over garage: Flat Ceiling or Scissor Truss	361	30.0	0.0	0.035	0.026	13	9
Wall: Wood Frame, 16" o.c.	1,215	20.0	0.0	0.059	0.060	67	68
interior door from garage to loft stairs: Solid Door (under 50% glazing)	26			0.290	0.320	7	8
double hung: Wood Frame SHGC: 0.18	11			0.300	0.320	3	4
casements: Wood Frame SHGC: 0.18	44			0.290	0.320	13	14
Floor: Slab-On-Grade (Unheated) Insulation depth: 2.0'	57		10.0	0.700	0.700	0	0

Compliance Statement: The proposed building design described here is consistent with the building plans, specifications, and other calculations submitted with the permit application. The proposed building has been designed to meet the 2018 IECC requirements in RES*check* Version : REScheck-Web and to comply with the mandatory requirements listed in the RES*check* Inspection Checklist.

Name - Title Signature Date

Project Title: 18.0320_19 HIGH ST. LOT 4_GARAGE Report date: 04/13/22
Data filename: Page 1 of 9

RES*check* Software Version : REScheck-Web

Inspection Checklist

Energy Code: 2018 IECC

Requirements: 0.0% were addressed directly in the RES*check* software

Text in the "Comments/Assumptions" column is provided by the user in the REScheck Requirements screen. For each requirement, the user certifies that a code requirement will be met and how that is documented, or that an exception is being claimed. Where compliance is itemized in a separate table, a reference to that table is provided.

Section # & Req.ID	Pre-Inspection/Plan Review	Plans Verified Value	Field Verified Value	Complies?	Comments/Assumptions
103.1, 103.2 [PR1][1]	Construction drawings and documentation demonstrate energy code compliance for the building envelope. Thermal envelope represented on construction documents.			☐Complies ☐Does Not ☐Not Observable ☐Not Applicable	
103.1, 103.2, 403.7 [PR3][1]	Construction drawings and documentation demonstrate energy code compliance for lighting and mechanical systems. Systems serving multiple dwelling units must demonstrate compliance with the IECC Commercial Provisions.			☐Complies ☐Does Not ☐Not Observable ☐Not Applicable	
302.1, 403.7 [PR2][2]	Heating and cooling equipment is sized per ACCA Manual S based on loads calculated per ACCA Manual J or other methods approved by the code official.	Heating: Btu/hr____ Cooling: Btu/hr____	Heating: Btu/hr____ Cooling: Btu/hr____	☐Complies ☐Does Not ☐Not Observable ☐Not Applicable	

Additional Comments/Assumptions:

1 High Impact (Tier 1) | 2 Medium Impact (Tier 2) | 3 Low Impact (Tier 3)

Project Title: 18.0320_19 HIGH ST. LOT 4_GARAGE Report date: 04/13/22
Data filename: Page 2 of 9

Section # & Req.ID	Foundation Inspection	Plans Verified Value	Field Verified Value	Complies?	Comments/Assumptions
402.1.2 [FO1][1]	Slab edge insulation R-value.	R-____ ☐ Unheated ☐ Heated	R-____ ☐ Unheated ☐ Heated	☐Complies ☐Does Not ☐Not Observable ☐Not Applicable	*See the Envelope Assemblies table for values.*
402.1.2 [FO3][1]	Slab edge insulation depth/length.	____ ft	____ ft	☐Complies ☐Does Not ☐Not Observable ☐Not Applicable	*See the Envelope Assemblies table for values.*
303.2.1 [FO11][2]	A protective covering is installed to protect exposed exterior insulation and extends a minimum of 6 in. below grade.			☐Complies ☐Does Not ☐Not Observable ☐Not Applicable	
403.9 [FO12][2]	Snow- and ice-melting system controls installed.			☐Complies ☐Does Not ☐Not Observable ☐Not Applicable	

Additional Comments/Assumptions:

1 High Impact (Tier 1) | 2 Medium Impact (Tier 2) | 3 Low Impact (Tier 3)

Project Title: 18.0320_19 HIGH ST. LOT 4_GARAGE Report date: 04/13/22
Data filename: Page 3 of 9

Section # & Req.ID	Framing / Rough-In Inspection	Plans Verified Value	Field Verified Value	Complies?	Comments/Assumptions
402.1.1, 402.3.4 [FR1][1]	Door U-factor.	U-____	U-____	☐Complies ☐Does Not ☐Not Observable ☐Not Applicable	*See the Envelope Assemblies table for values.*
402.1.1, 402.3.1, 402.3.3, 402.5 [FR2][1]	Glazing U-factor (area-weighted average).	U-____	U-____	☐Complies ☐Does Not ☐Not Observable ☐Not Applicable	*See the Envelope Assemblies table for values.*
303.1.3 [FR4][1]	U-factors of fenestration products are determined in accordance with the NFRC test procedure or taken from the default table.			☐Complies ☐Does Not ☐Not Observable ☐Not Applicable	
402.4.1.1 [FR23][1]	Air barrier and thermal barrier installed per manufacturer's instructions.			☐Complies ☐Does Not ☐Not Observable ☐Not Applicable	
402.4.3 [FR20][1]	Fenestration that is not site built is listed and labeled as meeting AAMA /WDMA/CSA 101/I.S.2/A440 or has infiltration rates per NFRC 400 that do not exceed code limits.			☐Complies ☐Does Not ☐Not Observable ☐Not Applicable	
402.4.5 [FR16][2]	IC-rated recessed lighting fixtures sealed at housing/interior finish and labeled to indicate ≤2.0 cfm leakage at 75 Pa.			☐Complies ☐Does Not ☐Not Observable ☐Not Applicable	
403.3.1 [FR12][1]	Supply and return ducts in attics insulated >= R-8 where duct is >= 3 inches in diameter and >= R-6 where < 3 inches. Supply and return ducts in other portions of the building insulated >= R-6 for diameter >= 3 inches and R-4.2 for < 3 inches in diameter.			☐Complies ☐Does Not ☐Not Observable ☐Not Applicable	
403.3.2 [FR13][1]	Ducts, air handlers and filter boxes are sealed with joints/seams compliant with International Mechanical Code or International Residential Code, as applicable.			☐Complies ☐Does Not ☐Not Observable ☐Not Applicable	
403.3.5 [FR15][3]	Building cavities are not used as ducts or plenums.			☐Complies ☐Does Not ☐Not Observable ☐Not Applicable	
403.4 [FR17][2]	HVAC piping conveying fluids above 105 ºF or chilled fluids below 55 ºF are insulated to ≥R-3.	R-____	R-____	☐Complies ☐Does Not ☐Not Observable ☐Not Applicable	
403.4.1 [FR24][1]	Protection of insulation on HVAC piping.			☐Complies ☐Does Not ☐Not Observable ☐Not Applicable	
403.5.3 [FR18][2]	Hot water pipes are insulated to ≥R-3.	R-____	R-____	☐Complies ☐Does Not ☐Not Observable ☐Not Applicable	

1 High Impact (Tier 1) | 2 Medium Impact (Tier 2) | 3 Low Impact (Tier 3)

Project Title: 18.0320_19 HIGH ST. LOT 4_GARAGE Report date: 04/13/22
Data filename: Page 4 of 9

Section # & Req.ID	Insulation Inspection	Plans Verified Value	Field Verified Value	Complies?	Comments/Assumptions
303.1 [IN13][2]	All installed insulation is labeled or the installed R-values provided.			☐Complies ☐Does Not ☐Not Observable ☐Not Applicable	
402.1.1, 402.2.5, 402.2.6 [IN3][1]	Wall insulation R-value. If this is a mass wall with at least ½ of the wall insulation on the wall exterior, the exterior insulation requirement applies (FR10).	R-____ ☐ Wood ☐ Mass ☐ Steel	R-____ ☐ Wood ☐ Mass ☐ Steel	☐Complies ☐Does Not ☐Not Observable ☐Not Applicable	*See the Envelope Assemblies table for values.*
303.2 [IN4][1]	Wall insulation is installed per manufacturer's instructions.			☐Complies ☐Does Not ☐Not Observable ☐Not Applicable	

Additional Comments/Assumptions:

1 High Impact (Tier 1) | 2 Medium Impact (Tier 2) | 3 Low Impact (Tier 3)

Project Title: 18.0320_19 HIGH ST. LOT 4_GARAGE Report date: 04/13/22
Data filename: Page 6 of 9

Section # & Req.ID	Insulation Inspection	Plans Verified Value	Field Verified Value	Complies?	Comments/Assumptions
303.1 [IN13][2]	All installed insulation is labeled or the installed R-values provided.			☐Complies ☐Does Not ☐Not Observable ☐Not Applicable	
402.1.1, 402.2.5, 402.2.6 [IN3][1]	Wall insulation R-value. If this is a mass wall with at least ½ of the wall insulation on the wall exterior, the exterior insulation requirement applies (FR10).	R-____ ☐ Wood ☐ Mass ☐ Steel	R-____ ☐ Wood ☐ Mass ☐ Steel	☐Complies ☐Does Not ☐Not Observable ☐Not Applicable	*See the Envelope Assemblies table for values.*
303.2 [IN4][1]	Wall insulation is installed per manufacturer's instructions.			☐Complies ☐Does Not ☐Not Observable ☐Not Applicable	

Additional Comments/Assumptions:

1 High Impact (Tier 1) | 2 Medium Impact (Tier 2) | 3 Low Impact (Tier 3)

Project Title: 18.0320_19 HIGH ST. LOT 4_GARAGE Report date: 04/13/22
Data filename: Page 6 of 9

Section # & Req.ID	Final Inspection Provisions	Plans Verified Value	Field Verified Value	Complies?	Comments/Assumptions
402.1.1, 402.2.1, 402.2.2, 402.2.6 [FI1][1]	Ceiling insulation R-value.	R-____ ☐ Wood ☐ Steel	R-____ ☐ Wood ☐ Steel	☐Complies ☐Does Not ☐Not Observable ☐Not Applicable	*See the Envelope Assemblies table for values.*
303.1.1.1, 303.2 [FI2][1]	Ceiling insulation installed per manufacturer's instructions. Blown insulation marked every 300 ft².			☐Complies ☐Does Not ☐Not Observable ☐Not Applicable	
402.2.3 [FI22][2]	Vented attics with air permeable insulation include baffle adjacent to soffit and eave vents that extends over insulation.			☐Complies ☐Does Not ☐Not Observable ☐Not Applicable	
402.2.4 [FI3][1]	Attic access hatch and door insulation ≥R-value of the adjacent assembly.	R-____	R-____	☐Complies ☐Does Not ☐Not Observable ☐Not Applicable	
402.4.1.2 [FI17][1]	Blower door test @ 50 Pa. <=5 ach in Climate Zones 1-2, and <=3 ach in Climate Zones 3-8.	ACH 50 = ____	ACH 50 = ____	☐Complies ☐Does Not ☐Not Observable ☐Not Applicable	
403.3.3 [FI27][1]	Ducts are pressure tested to determine air leakage with either: Rough-in test: Total leakage measured with a pressure differential of 0.1 inch w.g. across the system including the manufacturer's air handler enclosure if installed at time of test. Postconstruction test: Total leakage measured with a pressure differential of 0.1 inch w.g. across the entire system including the manufacturer's air handler enclosure.	____ cfm/100 ft²	____ cfm/100 ft²	☐Complies ☐Does Not ☐Not Observable ☐Not Applicable	
403.3.4 [FI4][1]	Duct tightness test result of <=4 cfm/100 ft2 across the system or <=3 cfm/100 ft2 without air handler @ 25 Pa. For rough-in tests, verification may need to occur during Framing Inspection.	____ cfm/100 ft²	____ cfm/100 ft²	☐Complies ☐Does Not ☐Not Observable ☐Not Applicable	
403.3.2.1 [FI24][1]	Air handler leakage designated by manufacturer at <=2% of design air flow.			☐Complies ☐Does Not ☐Not Observable ☐Not Applicable	
403.1.1 [FI9][2]	Programmable thermostats installed for control of primary heating and cooling systems and initially set by manufacturer to code specifications.			☐Complies ☐Does Not ☐Not Observable ☐Not Applicable	
403.1.2 [FI10][2]	Heat pump thermostat installed on heat pumps.			☐Complies ☐Does Not ☐Not Observable ☐Not Applicable	
403.5.1 [FI11][2]	Circulating service hot water systems have automatic or accessible manual controls.			☐Complies ☐Does Not ☐Not Observable ☐Not Applicable	

1 High Impact (Tier 1) | 2 Medium Impact (Tier 2) | 3 Low Impact (Tier 3)

Project Title: 18.0320_19 HIGH ST. LOT 4_GARAGE Report date: 04/13/22
Data filename: Page 7 of 9

Section # & Req.ID	Final Inspection Provisions	Plans Verified Value	Field Verified Value	Complies?	Comments/Assumptions
403.6.1 [FI25][2]	All mechanical ventilation system fans not part of tested and listed HVAC equipment meet efficacy and air flow limits per Table R403.6.1.			☐Complies ☐Does Not ☐Not Observable ☐Not Applicable	
403.2 [FI26][2]	Hot water boilers supplying heat through one- or two-pipe heating systems have outdoor setback control to lower boiler water temperature based on outdoor temperature.			☐Complies ☐Does Not ☐Not Observable ☐Not Applicable	
403.5.1.1 [FI28][2]	Heated water circulation systems have a circulation pump. The system return pipe is a dedicated return pipe or a cold water supply pipe. Gravity and thermos-syphon circulation systems are not present. Controls for circulating hot water system pumps start the pump with signal for hot water demand within the occupancy. Controls automatically turn off the pump when water is in circulation loop is at set-point temperature and no demand for hot water exists.			☐Complies ☐Does Not ☐Not Observable ☐Not Applicable	
403.5.1.2 [FI29][2]	Electric heat trace systems comply with IEEE 515.1 or UL 515. Controls automatically adjust the energy input to the heat tracing to maintain the desired water temperature in the piping.			☐Complies ☐Does Not ☐Not Observable ☐Not Applicable	
403.5.2 [FI30][2]	Demand recirculation water systems have controls that manage operation of the pump and limit the temperature of the water entering the cold water piping to <= 104ºF.			☐Complies ☐Does Not ☐Not Observable ☐Not Applicable	
403.5.4 [FI31][2]	Drain water heat recovery units tested in accordance with CSA B55.1. Potable water-side pressure loss of drain water heat recovery units < 3 psi for individual units connected to one or two showers. Potable water-side pressure loss of drain water heat recovery units < 2 psi for individual units connected to three or more showers.			☐Complies ☐Does Not ☐Not Observable ☐Not Applicable	
404.1 [FI6][1]	90% or more of permanent fixtures have high efficacy lamps.			☐Complies ☐Does Not ☐Not Observable ☐Not Applicable	
404.1.1 [FI23][3]	Fuel gas lighting systems have no continuous pilot light.			☐Complies ☐Does Not ☐Not Observable ☐Not Applicable	
401.3 [FI7][2]	Compliance certificate posted.			☐Complies ☐Does Not ☐Not Observable ☐Not Applicable	

1 High Impact (Tier 1) | 2 Medium Impact (Tier 2) | 3 Low Impact (Tier 3)

Project Title: 18.0320_19 HIGH ST. LOT 4_GARAGE Report date: 04/13/22
Data filename: Page 8 of 9

Section # & Req.ID	Final Inspection Provisions	Plans Verified Value	Field Verified Value	Complies?	Comments/Assumptions
303.3 [FI18][3]	Manufacturer manuals for mechanical and water heating systems have been provided.			☐Complies ☐Does Not ☐Not Observable ☐Not Applicable	

Additional Comments/Assumptions:

1 High Impact (Tier 1) | 2 Medium Impact (Tier 2) | 3 Low Impact (Tier 3)

Project Title: 18.0320_19 HIGH ST. LOT 4_GARAGE Report date: 04/13/22
Data filename: Page 9 of 9

2018 IECC Energy Efficiency Certificate

Insulation Rating	R-Value
Above-Grade Wall	20.00
Below-Grade Wall	0.00
Floor	10.00
Ceiling / Roof	49.00
Ductwork (unconditioned spaces):	____

Glass & Door Rating	U-Factor	SHGC
Window	0.29	0.18
Door	0.29	

Heating & Cooling Equipment	Efficiency
Heating System:____________	____
Cooling System:____________	____
Water Heater:____________	____

Name: ____________ **Date:**____________

Comments

WINDOW/DOORS THERMAL DATA

THERMAL PERFORMACE DATA FOR DOORS & WINDOWS		
OPENING TYPE	U-VALUE	SHGC
CASEMENT WINDOWS	0.29	0.18
DOUBLE HUNG WINDOWS	0.30	0.18
SLIDING DOORS	0.28	0.19
EXTERIOR INSWINGING DOORS	0.29	0.16
OUT SWINGING PATIO DOORS	0.29	0.16
AWNING WINDOWS	0.29	0.18

THE AREA-WEIGHTED AVERAGE MAXIMUM FENESTRATION U-FACTOR PERMITTED USING TRADE-OFFS FROM SECTION 402.1 IN ZONE 4 SHALL BE .35 FOR VERTICAL FENESTRATION AND .55 FOR SKYLITES

ENERGY CONSERVATION NOTES

1. The following provisions for thermal resistance meet or exceed the requirements stipulated by the International Energy Conservation Code.
2. INSULATION: IRC

CEILING (OF UPPERMOST STORY)	R-49 W/ 500SF R-30 ALLOWANCE, OR R-38 CONTINUOUS
VAULTED CEILING	R-38
EXTERIOR FRAME WALLS	R-20 OR 13+5 (EXTERIOR)
RIM JOISTS	EQUAL TO WALL BELOW
FLOORS OVER UNHEATED SPACES (INCLUDING FLOOR OVERHANGS)	R-38
MASONRY WALLS (ENCLOSED HEATED LIVING AREAS)	R-13 OR R-10 CONTINUOUS
SLAB ON GRADE (HEATED SPACE) 24" PERIMETER INSULATION	R-10
WINDOWS	0.35 U FACTOR, 0.40 SHGC
DOORS	SEE SECTION R402.3.4

*ALL VALUES ARE TYPICAL UNLESS NOTED OTHERWISE IN ARCHITECTURAL DRAWINGS

3. Air Infiltration:
A. Windows: not exceeding five tenths (0.5) CFM of sash crack.
B. Sliding Glass Doors: not exceeding five tenths (0.5) CFM per foot of door area.
C. Swinging Doors: not exceeding one and twenty-five hundredths (1.25) CFM per square foot of door area.
Provide 1" fiberglass sill sealer between foundation wall and all sill plates.
D. In order to seal between dissimilar materials to allow for differential expansion and contraction, the following shall be caulked, gasketed, weatherstripped or otherwise sealed with an air barrier material, suitable film or solid material:
1. All joints, seams, and penetrations
2. Site-built windows, doors, and skylites
3. Openings between window and door assemblies and their respective jambs & framing
4. Utility penetrations
5. Dropped ceilings or chases adjacent to the thermal envelope
6. Knee walls
7. Walls and ceilings separating a garage from conditioned spaces
8. Behind tubs and showers on exterior walls
9. Common walls between dwelling units
10. Attic access openings
11. Rim joist junction
12. Other sources of inflitration

HVAC SYSTEMS & WATER HEATING

1. HEATING & COOLING EQUIP. CONTROLS. AT LEAST ONE PRE-PROGRAMMED PROGRAMMABLE THERMOSTAT IS REQUIRED WHEN USING A FORCED AIR SYSTEM. SEPARATE THERMOSTATS ARE REQUIRED FOR EACH HEATING/COOLING ZONE IN THE DWELLING.

2. DUCT INSULATION. SUPPLY DUCTS LOCATED OUTSIDE THE BUILDING THERMAL ENVELOPE SHALL BE INSULATED TO MINIMUM R-8, ALL OTHER DUCTS INSULATED TO A MINIMUM OF R-6

3. DUCT SEALING. ALL DUCTS, AIR HANDLERS, FILTER BOXES, & BUILDING CAVITIES MUST BE SEALED. JOINTS & SEAMS SHALL COMPLY W/ M1606.4.1 IRC

4. MECHANICAL SYSTEM PIPING INSULATION. R-3 FOR PIPING CARRYING FLUIDS AT >105°F OR <55°F IS REQUIRED

5. MECHANICAL VENTILATION. OUTDOOR AIR INTAKES OR EXHAUSTS SHALL HAVE DAMPERS

6. SERVICE WATER HEATING. PIPING IN THE CIRCULATING HOT WALTER SYSTEM SHALL BE INSULATED TO AN R-3 AND SYSTEM TO INCLUDE MANUAL OR AUTOMATIC SWITCH THAT CAN TURN OFF THE SYSTEM WHEN IT IS NOT USED, WATER HEATERS WITH PIPE RISERS SHALL HAVE HEAT TRAPS ON BOTH INLET AND OUTLET OF WATER HEATER UNLESS THE WATER HEATER HAS INTEGRAL HEAT TRAPS OR IS PART OF A CIRCULATION SYSTEM. TYPICAL METHODS USED FOR CREATING HEAT TRAPS ARE "U" OR "RAMS HORN" BENDS IN THE FLEXIBLE PIPE CONNECTORS OR INSTALLING AFTERMARKET PIPE NIPPLES WITH INTEGRAL TRAPS.

7. EQUIPMENT SIZING. HEATING AND COOLING EQUIPMENT SHALL BE SIZED BASED ON BUILDING LOADS CALCULATED IN ACCORDANCE WITH ACCA (AIR CONDITIONING CONTRACTORS OF AMERICA) MANUAL-J, A SIMPLIFIED METHOD OF CALCULATING HEATING AND COOLING LOADS. THE MANUAL-J CALCULATIONS SHALL BE SUBMITTED UPON APPLICATION FOR THE MECHANICAL PERMIT.

SECTION 302.1 OF IECC SPECIFIES THE INTERIOR DESIGN TEMPERATURES USED FOR HEATING AND COOLING LOAD CALCULATIONS AS MAXIMUM OF 72°F FOR HEATINGAND MINIMUM 75°F FOR COOLING.

LEGEND

INSULATION PERIMETER

AREA OF INSULATION ABOVE OR BELOW AS INDICATED

REVIEWED
By Michael Kyne at 2:21 pm, May 23, 2022

APPROVED
Montgomery County
Historic Preservation Commission

GTM ARCHITECTS

7735 OLD GEORGETOWN ROAD
SUITE 700
BETHESDA, MD 20814
(240)333-2000
(240)333-2001 FAX
WWW.GTMARCHITECTS.COM

GTM

Seal

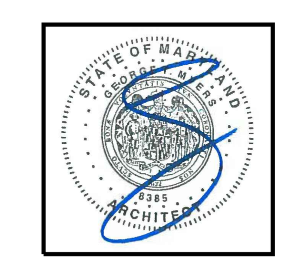

I certify that these documents were prepared or approved by me, and that I am a duly licensed architect under the laws of the State of Maryland, license number 8385, Expiration Date: 12-06-2022.

Consultant

Project

19 HIGH ST
LOT 4

Owner

Developer

Issue Description	Date
PERMIT SET	04/11/2022

GTM Project No.	18.0320
Checked By	GTM
Drawn By	LEO/NW
Scale	AS NOTED

Sheet Title

RESCHECK REPORT

Sheet No.

A704

COPYRIGHT, 2019 GTM ARCHITECTS, INC.

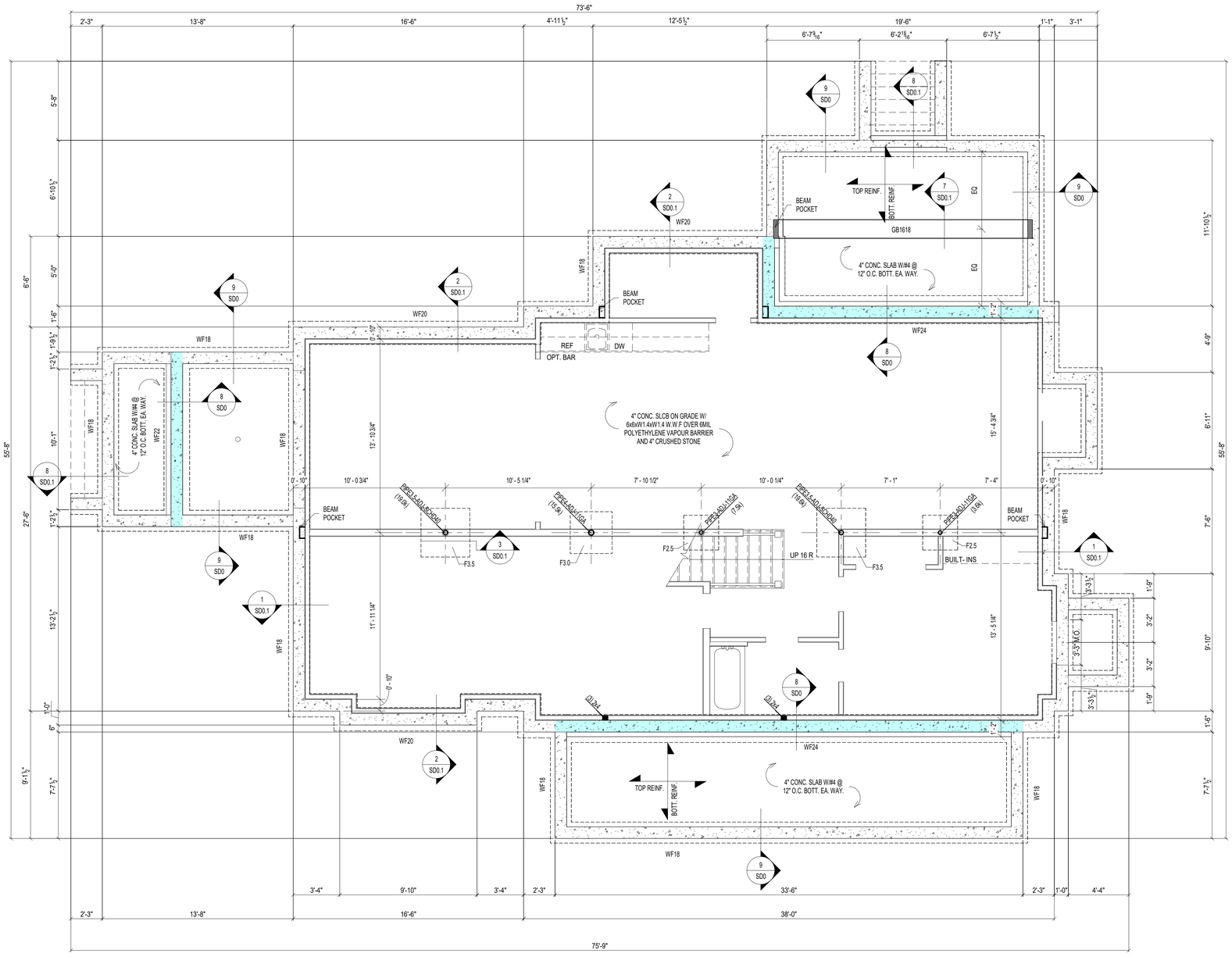

1 S0 FOUNDATION PLAN
SCALE: 1/4" = 1'-0"

REVIEWED
By Michael Kyne at 2:23 pm, May 23, 2022

APPROVED
Montgomery County
Historic Preservation Commission

LEGENDS:

TS = THICKENED SLAB
WF = WALL FOOTING
F = FOOTING

FOUNDATION NOTES:

1. FOUNDATION DESIGN IS BASED ON ASSUMED DESIGN CRITERIA AS SPECIFIED ON GENERAL NOTES SHEET. AND SHALL BE FIELD VERIFIED BY GEOTECHNICAL ENGINEER. NOTIFY ENGINEER IF ANY DESCRIPANCIES ARE FOUND OR CRITERIA DIFFERS FROM ASSUMED CRITERIA.
2. VERIFY AND COORDINATE ALL DIMENSIONS WITH ARCHITECTURAL AND CIVIL DRAWINGS. NOTIFY ENGINEER IF ANY COORINDATION IS REQUIRED.
3. BASEMENT SLAB SHALL BE 4" CONC. SLAB ON GRADE WITH 6x6xW1.4xW1.4 W.W.F U.N.O.
4. ALL EXTERIOR FOOTINGS SHALL BE LOWERED TO MINIMUM FROST DEPTH AS REQUIRED BY LOCAL JURISDICTIONS.
5. PROVIDE MIN. 3'-0"x3'-0"x12" CONC. FOOTING W/ #5 @ 12" O.C. BOTT. EA. WAY. UNDER EACH POST UNLESS NOTED OTHERWISE ON FOUDATION PLAN.
6. PROVIDE MIN. 16"x12" CONC. THICKENED SLAB UNDER BEARING WALLS UNLESS NOTED OTHERWISE.
7. PROVIDE MIN. 24"x8" CONC. WALL FOOTING W/ MIN. (2) #4 CONT. AT BOTT. UNDER ALL FOUNDATION WALLS UNLESS NOTED OTHERWISE.
8. PROVIDE WATERPROOFING, DAMP PROOFING PER APPLICABLE CODES AT FOUNDATION WALL, FOOTINGS AND SLABS.
9. INSTALL CONTINUOUS 4"Ø PERFORATED DRAIN PIPES ON EACH SIDE OF FOOTING. CONNECTED WITH 1 1/2"Ø WEEP HOLES @ 8'-0" O.C. AND DRAIN TO SUMP PUMP OR DAY LIGHT.

PLAN LEGENDS & SYMBOLS:

- INDICATES BEARING WALL
- INDICATES DRAIN HOLE FROM ABOVE
- INDICATES JOIST/TRUSS HANEGR (REFER TO SHOP DWGS)
- INDICATES FRAMING DIRECTION
- INDICATES REBAR DIRECTION
- (_J+_S) — INDICATES NO. OF KING STUDS AT EACH END; INDICATES NO. OF JACK STUDS AT EACH END
- WF?? — INDICATES WALL FOOTING; WIDTH OF WALL FOOTING IN INCHES
- TS?? — INDICATES THICKENED SLAB; WIDTH OF THICKENED SLAB IN INCHES
- F.x.x — INDICATES ISOLATED COLUMN FOOTING; INDICATES SIZE OF FOOTING IN DECIMAL FEET
- ML?? — MICROLAM LVL 2.0E; DEPTH OF MICROLAM LVL IN INCHES
- LSL?? — LAMINATED STRAND LUMBER 1.7E; DEPTH OF TIMBERSTAND LSL BEAM IN INCHES
- PSL?? — PARALLAM STRAND LUMBER 2.0E; WIDTHxDEPTH OF MEMBER
- CC — COLUMN CAP
- CB — COLUMN BASE
- HD — HOLD DOWN ANCHOR
- MS — METAL STRAP
- H — JOIST/TRUSS/BEAM HANGER
- HC — HURRICANE CLIPS

COLUMN FOOTING SCHEDULE

MARK	DESCRIPTION
F2.5	2'-6" x 2'-6" x 12" CONC. FTG W/ #4 @ 12" O.C. BOTT. EA. WAY
F3.0	3'-0" x 3'-0" x 12" CONC. FTG W/ #4 @ 12" O.C. BOTT. EA. WAY
F3.5	3'-6" x 3'-6" x 12" CONC. FTG W/ #4 @ 12" O.C. BOTT. EA. WAY

CONCRETE GRADE BEAM SCHEDULE

MARK	DESCRIPTION
GB1618	16" x 18" CONC. GRADE BEAM W/ (4) #5 CONT. @ BOTT.

CONCRETE LINTEL SCHEDULE

MARK	DESCRIPTION
CB812	8" x 12" CONC. LINTEL W/ (2) #5 CONT. @ BOTT.

WALL FOOTING SCHEDULE

MARK	DESCRIPTION
WF18	18" x 8" CONC. FTG. W/ (2) #4 CONT. @ BOTT.
WF20	20" x 8" CONC. FTG. W/ (2) #4 CONT. @ BOTT.
WF22	22" x 8" CONC. FTG. W/ (2) #4 CONT. @ BOTT.
WF24	24" x 8" CONC. FTG. W/ (2) #4 CONT. @ BOTT.

BASEMENT FOUNDATION WALL SCHEDULE (MAX. UNSPPORTED HEIGHT = 9'-0")

THICKNESS	UNBALANCED BACK FILL HEIGHT	VERTICAL REBARS (E.F.P. = 30 PSF/FT)	VERTICAL REBARS (E.F.P. = 45 PSF/FT)	VERTICAL REBARS (E.F.P. = 60 PSF/FT)	HORIZONTAL REBARS
8"	UP TO 5'-0"	NOT REQD.	NOT REQD.	NOT REQUIRED	#4 @ 24" O.C.
	5'-0" < HT < 6'-0"	NOT REQD.	NOT REQD.	#5 @ 36" O.C.	
	6'-0" < HT < 7'-0"	NOT REQD.	#5 @ 36" O.C.	#5 @ 24" O.C.	
	7'-0" < HT < 8'-0"	#4 @ 24" O.C.	#5 @ 24" O.C.	#5 @ 20" O.C.	
	8'-0" < HT < 9'-0"	#4 @ 18" O.C.	#5 @ 20" O.C.	#5 @ 16" O.C.	

NOTE:
1. BASED ON TABLE 3.12 OF PCA-100 "PRESCRIPTIVE DESIGN OF EXTERIOR CONCRETE WALLS" WITH FOLLOWING CRITERIA
2. f'C' = 3000 psi & Fy = 60000 ksi
3. E.F.P. = EQUIVALENT EARTH PRESSURE
4. MAXIMUM WALL HEIGHT = 9'-0"
5. MIN. COVER TO REINFORCEMENT AT INSIDE FACE = 3/4" & MIN. COVER TO REINFORCEMENT AT OUTSIDE FACE = 1 1/2"
6. PROVIDE MINIMUM ONE #4 REBAR 12" FROM TOP & BOTTOM.
7. PROVIDE PROPER DRAINAGE TO THE BACKFILL REFER TO ARCHITECTURAL DRAWINGS FOR DRAINAGE AND WATEPROOFING
8. REFER TO GEOTECHNICAL REPORT FOR ALL FURTHER RECOMMENDATIONS. GEOTECHNICAL ENGINEER TO VERIFY FOUNDATION DESIGN CRITERIA FOR SOIL BEARING CAPACTY AND EARTH PRESSURE.
9. REBARS CAN BE SUBSTITUTED WITH #4 REBARS TO MATCH SPECIFIED AREA OF REINFORCEMENT IN ABOVE TABLE

BASEMENT FOUNDATION WALL SCHEDULE (MAX. UNSPPORTED HEIGHT = 9'-0")

THICKNESS	UNBALANCED BACK FILL HEIGHT	VERTICAL REBARS (E.F.P. = 30 PSF/FT)	VERTICAL REBARS (E.F.P. = 45 PSF/FT)	VERTICAL REBARS (E.F.P. = 60 PSF/FT)	HORIZONTAL REBARS
10"	UP TO 6'-0"	NOT REQD.	NOT REQD.	NOT REQD.	#4 @ 24" O.C.
	6'-0" < HT < 7'-0"	NOT REQD.	NOT REQD.	#4 @ 24" O.C.	
	7'-0" < HT < 8'-0"	NOT REQD.	#4 @ 18" O.C.	#4 @ 16" O.C.	
	8'-0" < HT < 9'-0"	NOT REQD.	#4 @ 16" O.C.	#4 @ 12" O.C.	

NOTE:
1. BASED ON TABLE A.4 OF ACI 332-10 WITH FOLLOWING CRITERIA
2. f'C' = 3000 psi & Fy = 60000 ksi
3. E.F.P. = EQUIVALENT EARTH PRESSURE
4. MAXIMUM WALL HEIGHT = 9'-0"
5. MIN. COVER TO REINFORCEMENT AT INSIDE FACE = 3/4" & MIN. COVER TO REINFORCEMENT AT OUTSIDE FACE = 1 1/2"
6. PROVIDE MINIMUM ONE #4 REBAR 12" FROM TOP & BOTTOM.
7. PROVIDE PROPER DRAINAGE TO THE BACKFILL REFER TO ARCHITECTURAL DRAWINGS FOR DRAINAGE AND WATEPROOFING
8. REFER TO GEOTECHNICAL REPORT FOR ALL FURTHER RECOMMENDATIONS. GEOTECHNICAL ENGINEER TO VERIFY FOUNDATION DESIGN CRITERIA FOR SOIL BEARING CAPACTY AND EARTH PRESSURE.

© COPYRIGHT 2016
Structural Engineering content of this drawings are property of structBIM LLC and are issued for this project only. Any re-use or re-production of these drawings shall not be done without written consent of structBIM LLC. These drawings are to be read in conjuction with project specifications and drawings from other consultants. These drawings shall not be used as shop drawings. Do not scale drawings, use dimensions as specified.

GTM ARCHITECTS

7735 OLD GEORGETOWN ROAD
SUITE 700
BETHESDA, MD 20814
(240)333-2000
(240)333-2001 FAX
WWW.GTMARCHITECTS.COM

GTM

Seal

STATE OF MARYLAND · KENESSIAL KANG · 40082 · PROFESSIONAL ENGINEER

Consultant

structBIM ENGINEERS
WE DESIGN....WE BIM
46400 BENEDICT DR, SUITE #211
PHONE: 703-657-4481
E-MAIL: info@structBIM.com

Project

19 HIGH STREET LOT 4
BROOKVILLE, MD

LOT 4

I certify that these documents were prepared or approved by me, and that I am a duly licensed Professional Engineer under the laws of the State of Maryland, license number 40082, Expiration Date: 02-13-2023.

Issue Description	*Date*

structBIM Project No.	22-0165
Checked By	KK
Drawn By	KK
Scale	1/4" = 1'-0"

Sheet Title

FOUNDATION PLAN

Sheet No.

S0

COPYRIGHT, 2016 structBIMEngineers, LLC.
PLOTTED ON: 4/15/2022 12:51:35 PM

REVIEWED
By Michael Kyne at 2:23 pm, May 23, 2022

APPROVED
Montgomery County
Historic Preservation Commission

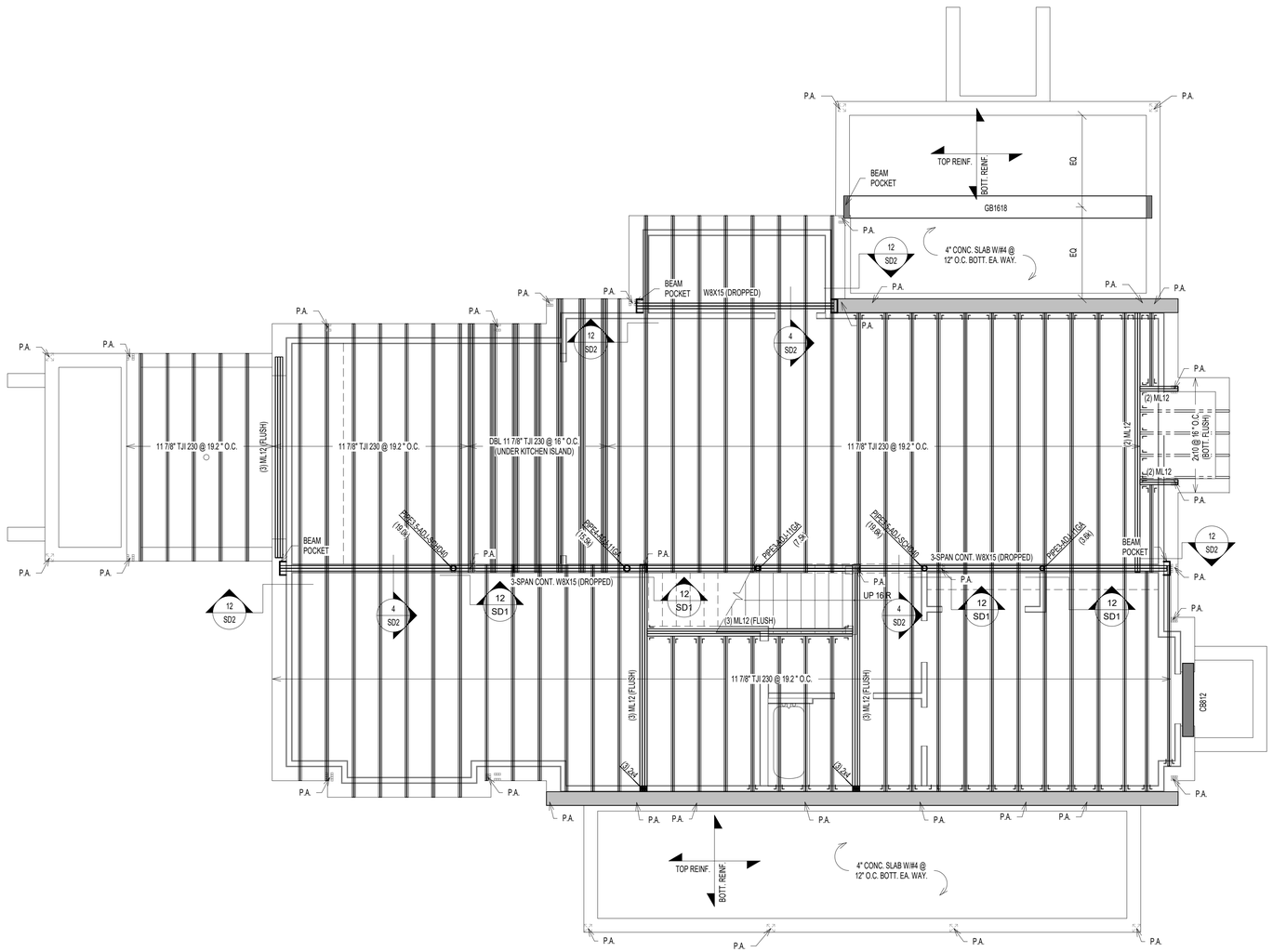

1 / S1 FIRST FLOOR FRAMING PLAN
SCALE: 1/4" = 1'-0"

NOTES:

1. FLOOR JOISTS SHALL BE SPACED @ 16" O.C. UNLESS NOTED OTHERWISE.
2. (J) INDICATED JACK STUDS & (S) INDICATES KING STUDS. EXAMPLE: 1J+1S = ONE JACK STUD & ONE KING STUD AT EACH END OF SPECIFIED HEADER.
3. FLOOR SHEATHING SHALL BE 3/4" APA RATED 3/4" T&G PLYWOOD WITH SPAN RATING OF 48/24 OR STURD-I-FLOOR WITH 24" O.C. GRADE.
4. WALL SHEATHING SHALL BE 7/16" APA RATED OSB/PLYWOOD CONTINUOUS SHEATHING W/ 8d NAILS @ 6" O.C.ON EDGES AND 12" O.C. IN-FIELD.
5. INSTALL BRIDGING BETWEEN JOISTS AT MID-SPAN OR AS REQUIRED PER MANUFACTURER BRIDGING BETWEEN JOISTS UNDER KITCHEN PLATFORMS AND CERAMIC TILE AREAS FOR MIN.THREE JOIST BAYS @ 8'-0" O.C. MAX.
6. FLOOR JOISTS SHALL HAVE 1/2" GYPSUM BOARD CEILING ATTACHED DIRECTLY TO UNDERSIDE OF BOTTOM FLANGE OF JOIST. NOTIFY ENGINEER OF ANY UNFINISHED AREAS.
7. ALL JOISTS ARE DESIGNED PER MIN. PRO RATING (BASED ON ILEVEL WEYERHAEUSER PRO RATING CRITERIA) CRITERIA OF 38. NOTIFY ENGINEER, IF HIGHER PRO RATING IS REQUIRED.
8. INSTALL SQUASH BLOCKS AT EVERY BEARING LOCATION AND PROVIDE SOLID BLOCKING UNDER EVERY BEARING WALL FROM ABOVE AT ALL I JOISTS.
9. PROVIDE JOISTS AT MAX. 16" O.C. SPACING UNDER CERAMIC TILE AREAS. JOIST MANUFACTURER TO DESIGN JOISTS FOR DEFLECTION LIMIT OF L/720 OR 0.3" MAX. COORDINATE LOCATION OF CERAMIC TILE AREAS WITH ARCHITECTURAL DRAWINGS.
10. PROVIDE DOUBLE JOISTS UNDER KITCHEN ISLANDS, OVERSIZED BATH TUBS.
11. WEB STIFFENERS ARE REQUIRED WHEN INTERMEDIATE BEARING LENGTH IS LESS THAN 5 1/4" AND SPAN ON EITHER SIDE OF BEARING IS LARGER THAN REQUIRED PER JOIST MANUFACTURER.
12. PROTECT ALL UNTREATED WOOD FROM DIRECT CONTACT WITH CONCRETE OR MASONRY.
13. PROVIDE SQUASH BLOCKS ON BOTH SIDES AT BEARING WALL LOCATIONS WITH ONE 10d NAILS AT EACH FLANGE.
14. PROVIDE BLOCKING PANELS PER MANUFACTURER'S SPECIFICATIONS, IF JOISTS ARE SUPPORTING SHEAR WALL FROM ABOVE.
15. PROVIDE SOLID BLOCKING BETWEEN JOISTS WHEN SUPPORTING BEARING WALL FROM ABOVE.
16. PROVIDE BACKER/FILLER BLOCKS AS RECOMMENDED BY JOIST MANUFACTURER AT CONNECTION LOCATIONS OR MULTIPLE JOISTS SUPPORTING POSTS FROM ABOVE.
17. DO NOT CUT HOLES OR NOTCHES WITHOUT PRIOR APPROVAL FROM ENGINEER OR JOIST MANUFACTURER.
18. PROVIDE SOLID BLOCKING OF SAME SIZE WITHIN FLOOR SYSTEM UNDER ALL JACK STUDS, KING STUDS & POSTS FROM ABOVE.
19. PROVIDE MIN. (2) 2x12 UP TO 4'-0" SPAN, (2) ML10 FOR 4'-0" TO 6'-0" SPAN, (2) ML12 6'-0" TO 9'-0" SPAN WHERE BEAM SIZES ARE NOT SPECIFIED ON PLANS. ANY SPANS LARGER THAN 9'-0" SUPPORITNG FRAMING AND NOT SPECIFIED ON PLANS SHALL BE NOTIFIED TO ENGINEER IMMEDIATELY.
20. PROVIDE MIN. DOUBLE JOISTS OR SPECIAL FLOOR TRUSS UNDER (2) 2x POSTS AND (2) PLY MICROLAM LVL OR SPECIAL FLOOR TRUSS TO MATCH FLOOR THICKNESS UNDER (3) 2x POSTS UNLESS NOTED OTHERWISE ON THE PLAN. CONTRACTOR SHALL NOTIFY ENGINEER FOR SUPPORTING STRUCTURAL MEMBER FOR ALL OTHER POST SIZES COMING FROM ABOVE.
21. PROVIDE MIN. (3) 2x POST UNDER BEAMS UNLESS NOTED OTHERWISE.
22. ALL POSTS SHALL CONTINUE DOWN TO FOUNDATION OR STRUCTURAL MEMBER SUCH AS BEAM/GIRDER TRUSS BELOW.
23. PROVIDE MIN. 3 JACK STUDS + 2 KING STUDS AT ALL HEADERS UNLESS NOTED OTHERWISE.
24. ALL WALL STUDS SHALL SPF#2 AND SHALL BE SPACED AT MAX. 16" O.C. UNLESS NOTED OTHERWISE.
25. ALL TWO STORY HIGH WALLS SHALL BE (2) 2x6 SPF#2 BALLOON FRAMED UNLESS NOTED OTHERWISE.
26. PROVIDE FULL HEIGHT BLOCKING BETWEEN JOISTS UP TO THREE JOIST BAYS WHERE JOISTS ARE PARALLEL TO FOUNDATION WALL.

PLAN LEGENDS & SYMBOLS:

- INDICATES BEARING WALL
- INDICATES DRAIN HOLE FROM ABOVE
- INDICATES JOIST/TRUSS HANEGR (REFER TO SHOP DWGS)
- INDICATES FRAMING DIRECTION
- INDICATES REBAR DIRECTION
- (_J+_S) — INDICATES NO. OF KING STUDS AT EACH END; INDICATES NO. OF JACK STUDS AT EACH END
- WF?? — INDICATES WALL FOOTING; WIDTH OF WALL FOOTING IN INCHES
- TS?? — INDICATES THICKENED SLAB; WIDTH OF THICKENED SLAB IN INCHES
- F.x.x — INDICATES ISOLATED COLUMN FOOTING; INDICATES SIZE OF FOOTING IN DECIMAL FEET
- ML?? — MICROLAM LVL 2.0E; DEPTH OF MICROLAM LVL IN INCHES
- LSL?? — LAMINATED STRAND LUMBER 1.7E; DEPTH OF TIMBERSTAND LSL BEAM IN INCHES
- PSL?? — PARALLAM STRAND LUMBER 2.0E; WIDTHxDEPTH OF MEMBER
- CC — COLUMN CAP
- CB — COLUMN BASE
- HD — HOLD DOWN ANCHOR
- MS — METAL STRAP
- H — JOIST/TRUSS/BEAM HANGER
- HC — HURRICANE CLIPS

MICROLAM LVL BEAM SCHEDULE

MARK	DESCRIPTION
(2) ML10	(2) 1 3/4" x 9 1/2" LVL - 1.9E
(2) ML12	(2) 1 3/4" x 11 7/8" LVL - 1.9E
(3) ML10	(3) 1 3/4" x 9 1/2" LVL - 1.9E
(3) ML12	(3) 1 3/4" x 11 7/8" LVL - 1.9E
(3) ML16	(3) 1 3/4" x 16" LVL - 1.9E
(4) ML12	(4) 1 3/4" x 11 7/8" LVL - 1.9E

PARALLAM PSL POST SCHEDULE

MARK	DESCRIPTION
PSL66	5 1/4" x 5 1/4" PSL 1.8E

STEEL COLUMN SCHEDULE

MARK	DESCRIPTION
PIPE3-ADJ-11GA	3"Ø x 11 GA. ADJUSTABLE STEEL PIPE COLUMN
PIPE3.5-ADJ-SCHD40	3 1/2"Ø (O.D.) SCHEDULE 40 ADJUSTABLE STEEL PIPE COLUMN
PIPE4-ADJ-11GA	4"Ø x 11GA. ADJUSTABLE STEEL PIPE COLUMN

© COPYRIGHT 2016
Structural Engineering content of this drawings are property of structBIM LLC and are issued for this project only. Any re-use or re-production of these drawings shall not be done without written consent of structBIM LLC. These drawings are to be read in conjuction with project specifications and drawings from other consultants. These drawings shall not be used as shop drawings. Do not scale drawings, use dimensions as specified.

GTM ARCHITECTS

7735 OLD GEORGETOWN ROAD
SUITE 700
BETHESDA, MD 20814
(240)333-2000
(240)333-2001 FAX
WWW.GTMARCHITECTS.COM

GTM

Seal

STATE OF MARYLAND — KYRIAKOS KANELLOPOULOS — 40082 — PROFESSIONAL ENGINEER

Consultant

structBIM ENGINEERS
WE DESIGN....WE BIM
46400 BENEDICT DR, SUITE #211
PHONE: 703-657-4481
E-MAIL: info@structBIM.com

Project

19 HIGH STREET LOT 4
BROOKVILLE, MD

LOT 4

I certify that these documents were prepared or approved by me, and that I am a duly licensed Professional Engineer under the laws of the State of Maryland, license number 40082, Expiration Date: 02-13-2023.

Issue Description	*Date*

structBIM Project No.	22-0165
Checked By	KK
Drawn By	KK
Scale	1/4" = 1'-0"

Sheet Title
FIRST FLOOR FRAMING PLAN

Sheet No.

S1

COPYRIGHT, 2016 structBIMEngineers, LLC.

PLOTTED ON: 4/15/2022 12:51:38 PM

FILE NAME:

REVIEWED
By Michael Kyne at 2:23 pm, May 23, 2022

APPROVED
Montgomery County
Historic Preservation Commission

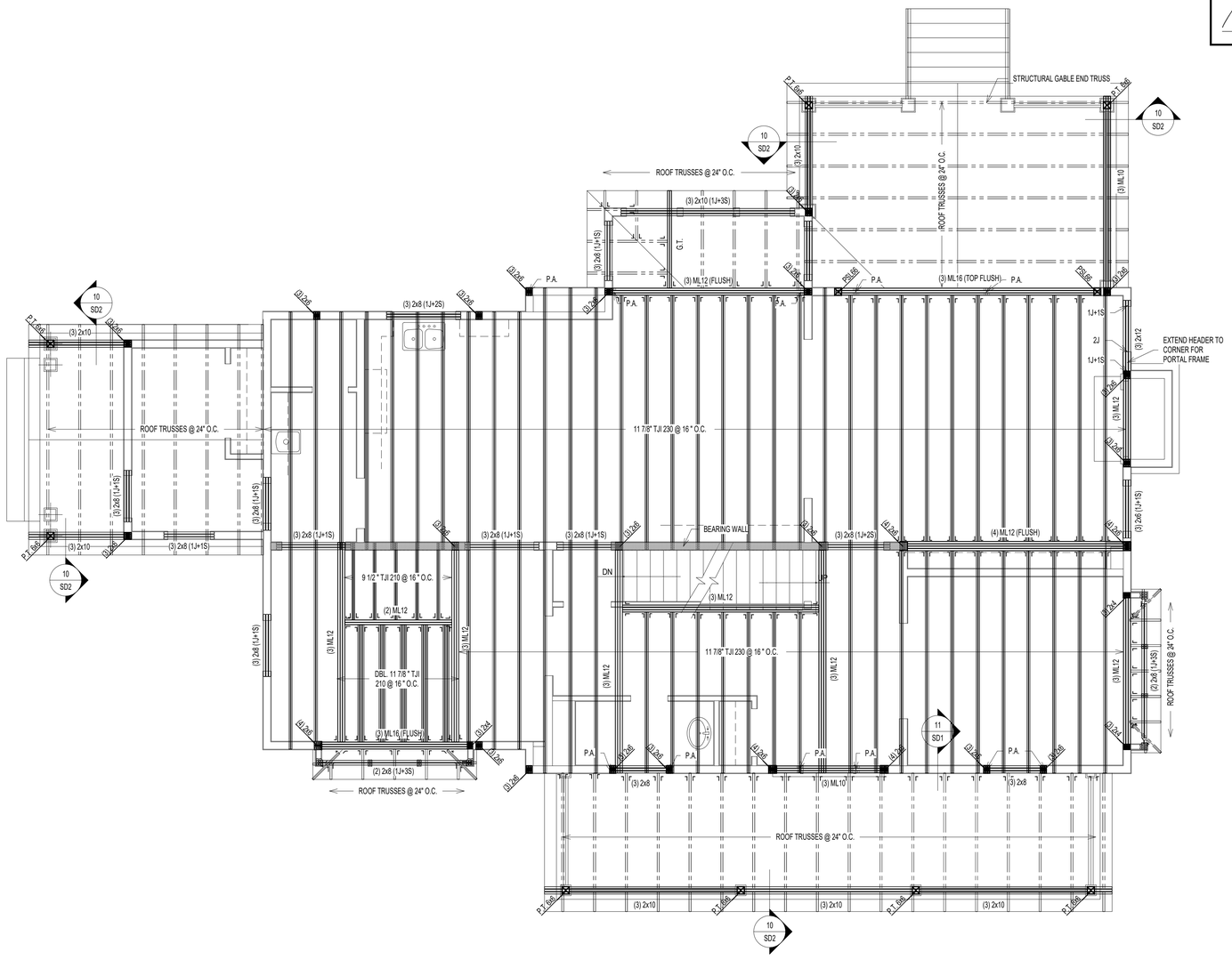

1 / S2 SECOND FLOOR FRAMING PLAN
SCALE: 1/4" = 1'-0"

NOTES:

1. FLOOR JOISTS SHALL BE SPACED @ 16" O.C. UNLESS NOTED OTHERWISE.
2. (J) INDICATED JACK STUDS & (S) INDICATES KING STUDS. EXAMPLE: 1J+1S = ONE JACK STUD & ONE KING STUD AT EACH END OF SPECIFIED HEADER.
3. FLOOR SHEATHING SHALL BE 3/4" APA RATED 3/4" T&G PLYWOOD WITH SPAN RATING OF 48/24 OR STURD-I-FLOOR WITH 24" O.C. GRADE.
4. WALL SHEATHING SHALL BE 7/16" APA RATED OSB/PLYWOOD CONTINUOUS SHEATHING W/ 8d NAILS @ 6" O.C.ON EDGES AND 12" O.C. IN-FIELD.
5. INSTALL BRIDGING BETWEEN JOISTS AT MID-SPAN OR AS REQUIRED PER MANUFACTURER BRIDGING BETWEEN JOISTS UNDER KITCHEN PLATFORMS AND CERAMIC TILE AREAS FOR MIN.THREE JOIST BAYS @ 8'-0" O.C. MAX.
6. FLOOR JOISTS SHALL HAVE 1/2" GYPSUM BOARD CEILING ATTACHED DIRECTLY TO UNDERSIDE OF BOTTOM FLANGE OF JOIST. NOTIFY ENGINEER OF ANY UNFINISHED AREAS.
7. ALL JOISTS ARE DESIGNED PER MIN. PRO RATING (BASED ON iLEVEL WEYERHAEUSER PRO RATING CRITERIA) CRITERIA OF 38. NOTIFY ENGINEER, IF HIGHER PRO RATING IS REQUIRED.
8. INSTALL SQUASH BLOCKS AT EVERY BEARING LOCATION AND PROVIDE SOLID BLOCKING UNDER EVERY BEARING WALL FROM ABOVE AT ALL I JOISTS.
9. PROVIDE JOISTS AT MAX. 16" O.C. SPACING UNDER CERAMIC TILE AREAS. JOIST MANUFACTURER TO DESIGN JOISTS FOR DEFLECTION LIMIT OF L/720 OR 0.3" MAX. COORDINATE LOCATION OF CERAMIC TILE AREAS WITH ARCHITECTURAL DRAWINGS.
10. PROVIDE DOUBLE JOISTS UNDER KITCHEN ISLANDS, OVERSIZED BATH TUBS.
11. WEB STIFFENERS ARE REQUIRED WHEN INTERMEDIATE BEARING LENGTH IS LESS THAN 5 1/4" AND SPAN ON EITHER SIDE OF BEARING IS LARGER THAN REQUIRED PER JOIST MANUFACTURER.
12. PROTECT ALL UNTREATED WOOD FROM DIRECT CONTACT WITH CONCRETE OR MASONRY.
13. PROVIDE SQUASH BLOCKS ON BOTH SIDES AT BEARING WALL LOCATIONS WITH ONE 10d NAILS AT EACH FLANGE.
14. PROVIDE BLOCKING PANELS PER MANUFACTURER'S SPECIFICATIONS, IF JOISTS ARE SUPPORTING SHEAR WALL FROM ABOVE.
15. PROVIDE SOLID BLOCKING BETWEEN JOISTS WHEN SUPPORTING BEARING WALL FROM ABOVE.
16. PROVIDE BACKER/FILLER BLOCKS AS RECOMMENDED BY JOIST MANUFACTURER AT CONNECTION LOCATIONS OR MULTIPLE JOISTS SUPPORTING POSTS FROM ABOVE.
17. DO NOT CUT HOLES OR NOTCHES WITHOUT PRIOR APPROVAL FROM ENGINEER OR JOIST MANUFACTURER.
18. PROVIDE SOLID BLOCKING OF SAME SIZE WITHIN FLOOR SYSTEM UNDER ALL JACK STUDS, KING STUDS & POSTS FROM ABOVE.
19. PROVIDE MIN. (2) 2x12 UP TO 4'-0" SPAN, (2) ML10 FOR 4'-0" TO 6'-0" SPAN, (2) ML12 6'-0" TO 9'-0" SPAN WHERE BEAM SIZES ARE NOT SPECIFIED ON PLANS. ANY SPANS LARGER THAN 9'-0" SUPPORITNG FRAMING AND NOT SPECIFIED ON PLANS SHALL BE NOTIFIED TO ENGINEER IMMEDIATELY.
20. PROVIDE MIN. DOUBLE JOISTS OR SPECIAL FLOOR TRUSS UNDER (2) 2x POSTS AND (2) PLY MICROLAM LVL OR SPECIAL FLOOR TRUSS TO MATCH FLOOR THICKNESS UNDER (3) 2x POSTS UNLESS NOTED OTHERWISE ON THE PLAN. CONTRACTOR SHALL NOTIFY ENGINEER FOR SUPPORTING STRUCTURAL MEMBER FOR ALL OTHER POST SIZES COMING FROM ABOVE.
21. PROVIDE MIN. (3) 2x POST UNDER BEAMS UNLESS NOTED OTHERWISE.
22. ALL POSTS SHALL CONTINUE DOWN TO FOUNDATION OR STRUCTURAL MEMBER SUCH AS BEAM/GIRDER TRUSS BELOW.
23. PROVIDE MIN. 3 JACK STUDS + 2 KING STUDS AT ALL HEADERS UNLESS NOTED OTHERWISE.
24. ALL WALL STUDS SHALL SPF#2 AND SHALL BE SPACED AT MAX. 16" O.C. UNLESS NOTED OTHERWISE.
25. ALL TWO STORY HIGH WALLS SHALL BE (2) 2x6 SPF#2 BALLOON FRAMED UNLESS NOTED OTHERWISE.
26. PROVIDE FULL HEIGHT BLOCKING BETWEEN JOISTS UP TO THREE JOIST BAYS WHERE JOISTS ARE PARALLEL TO FOUNDATION WALL.

PLAN LEGENDS & SYMBOLS:

- INDICATES BEARING WALL
- INDICATES DRAIN HOLE FROM ABOVE
- INDICATES JOIST/TRUSS HANEGR (REFER TO SHOP DWGS)
- INDICATES FRAMING DIRECTION
- INDICATES REBAR DIRECTION
- (_J+_S) — INDICATES NO. OF KING STUDS AT EACH END; INDICATES NO. OF JACK STUDS AT EACH END
- WF?? — INDICATES WALL FOOTING; WIDTH OF WALL FOOTING IN INCHES
- TS?? — INDICATES THICKENED SLAB; WIDTH OF THICKENED SLAB IN INCHES
- Fx.x — INDICATES ISOLATED COLUMN FOOTING; INDICATES SIZE OF FOOTING IN DECIMAL FEET
- ML?? — MICROLAM LVL 2.0E; DEPTH OF MICROLAM LVL IN INCHES
- LSL?? — LAMINATED STRAND LUMBER 1.7E; DEPTH OF TIMBERSTAND LSL BEAM IN INCHES
- PSL?? — PARALLAM STRAND LUMBER 2.0E; WIDTHxDEPTH OF MEMBER
- CC — COLUMN CAP
- CB — COLUMN BASE
- HD — HOLD DOWN ANCHOR
- MS — METAL STRAP
- H — JOIST/TRUSS/BEAM HANGER
- HC — HURRICANE CLIPS

MICROLAM LVL BEAM SCHEDULE

MARK	DESCRIPTION
(2) ML10	(2) 1 3/4" x 9 1/2" LVL - 1.9E
(2) ML12	(2) 1 3/4" x 11 7/8" LVL - 1.9E
(3) ML10	(3) 1 3/4" x 9 1/2" LVL - 1.9E
(3) ML12	(3) 1 3/4" x 11 7/8" LVL - 1.9E
(3) ML16	(3) 1 3/4" x 16" LVL - 1.9E
(4) ML12	(4) 1 3/4" x 11 7/8" LVL - 1.9E

PARALLAM PSL POST SCHEDULE

MARK	DESCRIPTION
PSL66	5 1/4" x 5 1/4" PSL 1.8E

STEEL COLUMN SCHEDULE

MARK	DESCRIPTION
PIPE3-ADJ-11GA	3"Ø x 11 GA. ADJUSTABLE STEEL PIPE COLUMN
PIPE3.5-ADJ-SCHD40	3 1/2"Ø (O.D.) SCHEDULE 40 ADJUSTABLE STEEL PIPE COLUMN
PIPE4-ADJ-11GA	4"Ø x 11GA. ADJUSTABLE STEEL PIPE COLUMN

© COPYRIGHT 2016
Structural Engineering content of this drawings are property of structBIM LLC and are issued for this project only. Any re-use or re-production of these drawings shall not be done without written consent of structBIM LLC. These drawings are to be read in conjuction with project specifications and drawings from other consultants. These drawings shall not be used as shop drawings. Do not scale drawings, use dimensions as specified.

GTM ARCHITECTS

7735 OLD GEORGETOWN ROAD
SUITE 700
BETHESDA, MD 20814
(240)333-2000
(240)333-2001 FAX
WWW.GTMARCHITECTS.COM

GTM

Seal

STATE OF MARYLAND — KRISTIAL KANE — 40082 — PROFESSIONAL ENGINEER

Consultant

structBIM ENGINEERS
WE DESIGN....WE BIM
46400 BENEDICT DR, SUITE #211
PHONE: 703-657-4481
E-MAIL: info@structBIM.com

Project

19 HIGH STREET LOT 4
BROOKVILLE, MD

LOT 4

I certify that these documents were prepared or approved by me, and that I am a duly licensed Professional Engineer under the laws of the State of Maryland, license number 40082, Expiration Date: 02-13-2023.

Issue Description	*Date*

structBIM Project No.	22-0165
Checked By	KK
Drawn By	KK
Scale	1/4" = 1'-0"

Sheet Title
SECOND FLOOR FRAMING PLAN

Sheet No.

S2

COPYRIGHT, 2016 structBIMEngineers, LLC.

PLOTTED ON: 4/15/2022 12:51:42 PM

FILE NAME:

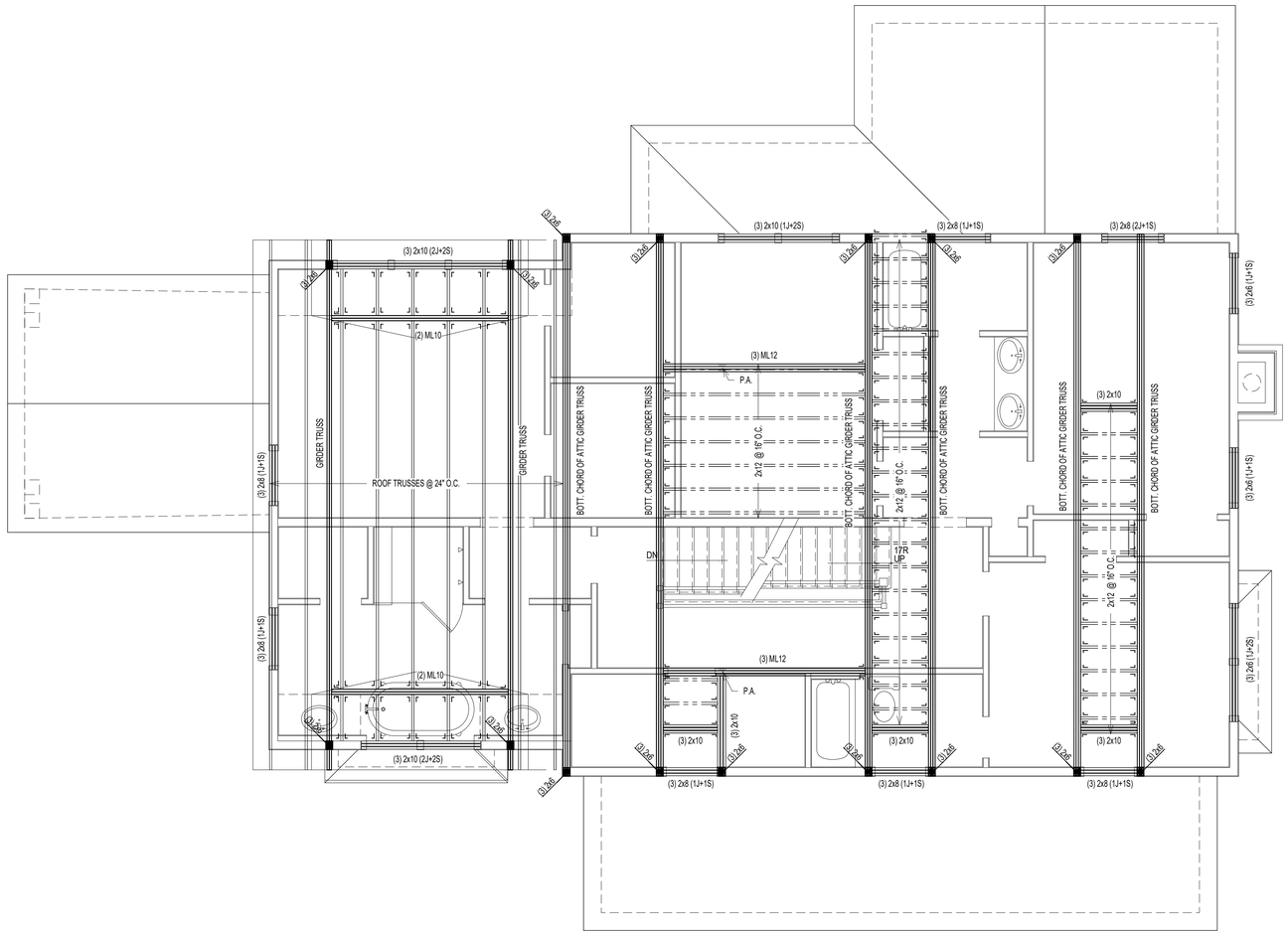

1 / S3 LOFT FLOOR FRAMING PLAN

SCALE: 1/4" = 1'-0"

NOTES:

1. ALL TRUSSES SHALL BE PRE-FABRICATED ENGINEERED ROOF TRUSSES AND SHALL BE INSTALLED PER TRUSS MANUFACTURER'S LAYOUT AND DESIGN. SUBMIT SIGNED AND SEALED SHOP DRAWINGS FOR REVIEW.
2. ALL ROOF SHEATHING SHALL BE APA RATED 7/16" C-C, C-D OR STRUCTURAL II WITH SPAN RATING OF 48/24 PER "AMERICAN PLYWOOD ASSOCIATION". PROVIDE MIN. NAILING PATTERN W/ 8d COMMON NAILS @ 6" O.C. ON EDGES AND 12" O.C. IN FIELD. PROVIDE PLYWOOD CLIPS AT PLYWOOD EDGES BETWEEN EACH FRAMING MEMBER.
3. TRUSS LAYOUT SHOWN ON THESE DRAWINGS ARE FOR SCHEMATIC PURPOSES ONLY AND TO REFLECT DESIGN INTENT FOR OTHER FRAMING MEMBERS. THESE DRAWINGS SHALL NOT BE CONSIDERED AS SHOP DRAWINGS. TRUSS DESIGN DRAWINGS PREPARED BY TRUSS MANUFACTURER SHALL BE USED FOR TRUSS LAYOUT AND COORDINATION. NOTIFY ENGINEER IF VARIATION IS MADE IN TRUSS DESIGN DRAWINGS THAT AFFECTS ORIGINAL DESIGN INTENT.
4. COORDINATE ROOF SLOPES, VALLEYS, HEEL HEIGHTS WITH ARCHITECTURAL DRAWINGS.
5. INSTALL MINIMUM H2.5A HURRICANE CLIPS AT EACH TRUSS BEARING UNLESS SPECIFIED ON SHOP DRAWINGS.
6. AT ALL NON LOAD BEARING WALLS MAINTAIN 1/4" GAP BETWEEN BOTTOM OF TRUSS BOTTOM CHORD AND TOP OF TOP PLATE. INSTALL SIMPSON "STC" TRUSS CLIPS TO MAINTAIN GAP TO ALLOW TRUSS MOVEMENT.
7. ALL SECTIONS/DETAIL CUTS MARKED AS TYP. SHALL BE APPLIED AT ALL SIMILAR CONDITIONS ON ENTIRE PLAN.
8. TRUSS MANUFACTURER TO DESIGN NECESSARY TEMPORARY/PERMENANT BRACING AND SHALL SPECIFY ON SHOP DRAWINGS.
9. TRUSS MANUFACTURER TO SPECIFY NECESSARY CONNECTORS AND FASTENERS FOR ALL CONNECTIONS INCLUDING BUT NOT LIMITED TO UPLIFT CONNECTORS, HANGERS.
10. PROVIDE SOLID BLOCKING OF SAME SIZE WITHIN FLOOR SYSTEM UNDER ALL JACK STUDS, KING STUDS & POSTS FROM ABOVE.
11. PROVIDE MIN. (3) 2x POST UNDER ALL GIRDER TRUSSES UNLESS NOTED OTHERWISE.
12. PROVIDE MIN. TWO JACK STUDS + TWO KING STUDS AT ALL HEADERS UNLESS NOTED OTHERWISE.
13. ALL WALL STUDS SHALL BE SPF#2 OR EQ. APPROVED AND SPACED AT MAX. 16" O.C. UNLESS NOTED OTHERWISE.

PLAN LEGENDS & SYMBOLS:

- INDICATES BEARING WALL
- INDICATES DRAIN HOLE FROM ABOVE
- INDICATES JOIST/TRUSS HANEGR (REFER TO SHOP DWGS)
- INDICATES FRAMING DIRECTION
- INDICATES REBAR DIRECTION
- (_J+_S) — INDICATES NO. OF KING STUDS AT EACH END; INDICATES NO. OF JACK STUDS AT EACH END
- WF?? — INDICATES WALL FOOTING; WIDTH OF WALL FOOTING IN INCHES
- TS?? — INDICATES THICKENED SLAB; WIDTH OF THICKENED SLAB IN INCHES
- Fx.x — INDICATES ISOLATED COLUMN FOOTING; INDICATES SIZE OF FOOTING IN DECIMAL FEET
- ML?? — MICROLAM LVL 2.0E; DEPTH OF MICROLAM LVL IN INCHES
- LSL?? — LAMINATED STRAND LUMBER 1.7E; DEPTH OF TIMBERSTAND LSL BEAM IN INCHES
- PSL?? — PARALLAM STRAND LUMBER 2.0E; WIDTHxDEPTH OF MEMBER
- CC — COLUMN CAP
- CB — COLUMN BASE
- HD — HOLD DOWN ANCHOR
- MS — METAL STRAP
- H — JOIST/TRUSS/BEAM HANGER
- HC — HURRICANE CLIPS

MICROLAM LVL BEAM SCHEDULE

MARK	DESCRIPTION
(2) ML10	(2) 1 3/4" x 9 1/2" LVL - 1.9E
(2) ML12	(2) 1 3/4" x 11 7/8" LVL - 1.9E
(3) ML10	(3) 1 3/4" x 9 1/2" LVL - 1.9E
(3) ML12	(3) 1 3/4" x 11 7/8" LVL - 1.9E
(3) ML16	(3) 1 3/4" x 16" LVL - 1.9E
(4) ML12	(4) 1 3/4" x 11 7/8" LVL - 1.9E

PARALLAM PSL POST SCHEDULE

MARK	DESCRIPTION
PSL66	5 1/4" x 5 1/4" PSL 1.8E

STEEL COLUMN SCHEDULE

MARK	DESCRIPTION
PIPE3-ADJ-11GA	3"Ø x 11 GA. ADJUSTABLE STEEL PIPE COLUMN
PIPE3.5-ADJ-SCHD40	3 1/2"Ø (O.D.) SCHEDULE 40 ADJUSTABLE STEEL PIPE COLUMN
PIPE4-ADJ-11GA	4"Ø x 11GA. ADJUSTABLE STEEL PIPE COLUMN

REVIEWED
By Michael Kyne at 2:23 pm, May 23, 2022

APPROVED
Montgomery County
Historic Preservation Commission

© COPYRIGHT 2016
Structural Engineering content of this drawings are property of structBIM LLC and are issued for this project only. Any re-use or re-production of these drawings shall not be done without written consent of structBIM LLC. These drawings are to be read in conjuction with project specifications and drawings from other consultants. These drawings shall not be used as shop drawings. Do not scale drawings, use dimensions as specified.

GTM ARCHITECTS

7735 OLD GEORGETOWN ROAD
SUITE 700
BETHESDA, MD 20814
(240)333-2000
(240)333-2001 FAX
WWW.GTMARCHITECTS.COM

GTM

Seal

STATE OF MARYLAND — KASSIAL KANDIAH — 40082 — PROFESSIONAL ENGINEER

Consultant

structBIM ENGINEERS
WE DESIGN....WE BIM
46400 BENEDICT DR, SUITE #211
PHONE: 703-657-4481
E-MAIL: info@structBIM.com

Project

19 HIGH STREET LOT 4
BROOKVILLE, MD

LOT 4

I certify that these documents were prepared or approved by me, and that I am a duly licensed Professional Engineer under the laws of the State of Maryland, license number 40082, Expiration Date: 02-13-2023.

Issue Description	*Date*

structBIM Project No.	22-0165
Checked By	KK
Drawn By	KK
Scale	1/4" = 1'-0"

Sheet Title
LOFT FLOOR FRAMING PLAN

Sheet No.

S3

COPYRIGHT, 2016 structBIMEngineers, LLC.
PLOTTED ON: 4/15/2022 12:51:45 PM

FILE NAME:

REVIEWED
By Michael Kyne at 2:23 pm, May 23, 2022

APPROVED
Montgomery County
Historic Preservation Commission

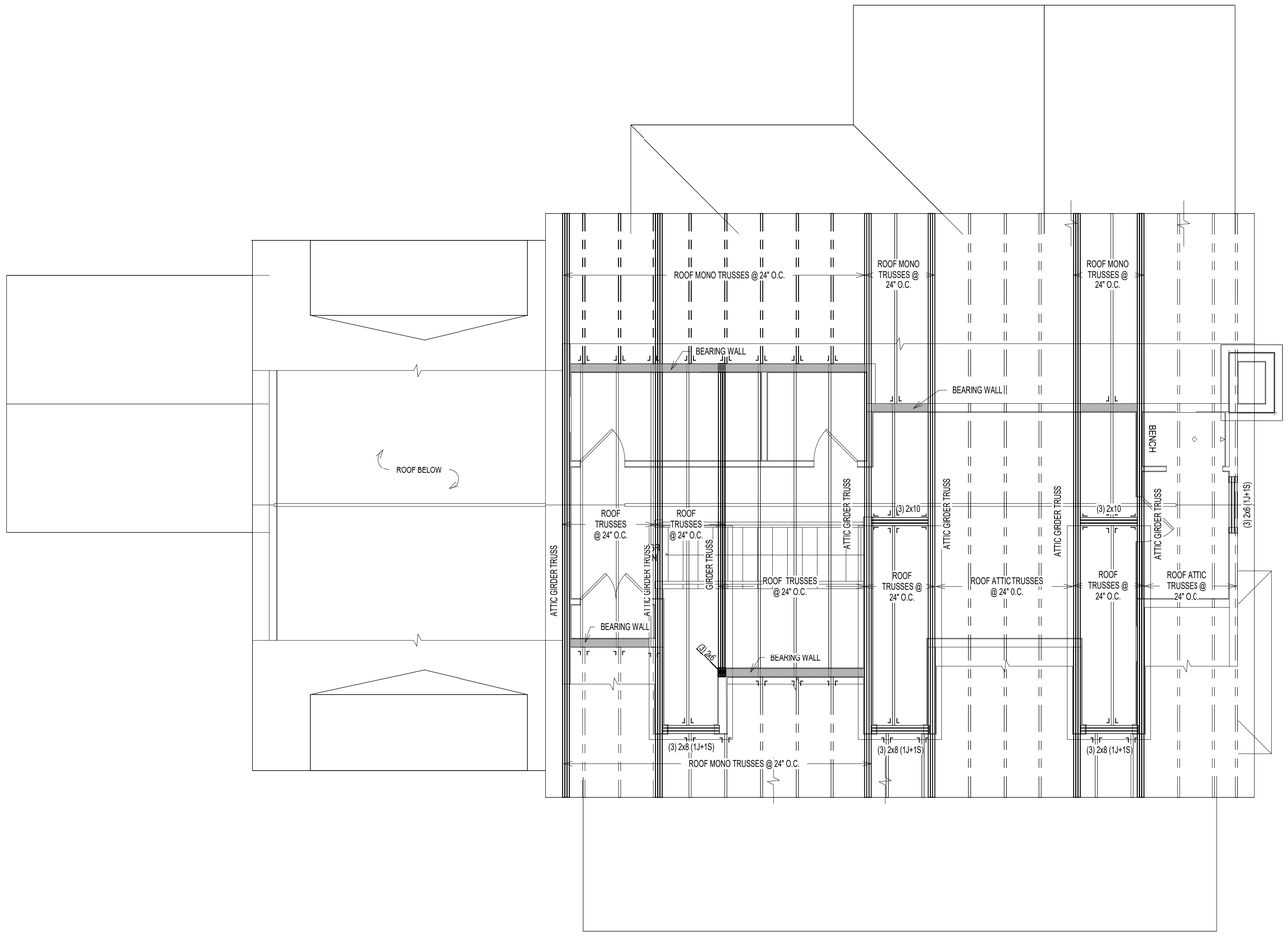

1 / S4 ROOF FRAMING PLAN
SCALE: 1/4" = 1'-0"

NOTES:

1. ALL TRUSSES SHALL BE PRE-FABRICATED ENGINEERED ROOF TRUSSES AND SHALL BE INSTALLED PER TRUSS MANUFACTURER'S LAYOUT AND DESIGN. SUBMIT SIGNED AND SEALED SHOP DRAWINGS FOR REVIEW.
2. ALL ROOF SHEATHING SHALL BE APA RATED 7/16" C-C, C-D OR STRUCTURAL II WITH SPAN RATING OF 48/24 PER "AMERICAN PLYWOOD ASSOCIATION". PROVIDE MIN. NAILING PATTERN W/ 8d COMMON NAILS @ 6" O.C. ON EDGES AND 12" O.C. IN FIELD. PROVIDE PLYWOOD CLIPS AT PLYWOOD EDGES BETWEEN EACH FRAMING MEMBER.
3. TRUSS LAYOUT SHOWN ON THESE DRAWINGS ARE FOR SCHEMATIC PURPOSES ONLY AND TO REFLECT DESIGN INTENT FOR OTHER FRAMING MEMBERS. THESE DRAWINGS SHALL NOT BE CONSIDERED AS SHOP DRAWINGS. TRUSS DESIGN DRAWINGS PREPARED BY TRUSS MANUFACTURER SHALL BE USED FOR TRUSS LAYOUT AND COORDINATION. NOTIFY ENGINEER IF VARIATION IS MADE IN TRUSS DESIGN DRAWINGS THAT AFFECTS ORIGINAL DESIGN INTENT.
4. COORDINATE ROOF SLOPES, VALLEYS, HEEL HEIGHTS WITH ARCHITECTURAL DRAWINGS.
5. INSTALL MINIMUM H2.5A HURRICANE CLIPS AT EACH TRUSS BEARING UNLESS SPECIFIED ON SHOP DRAWINGS.
6. AT ALL NON LOAD BEARING WALLS MAINTAIN 1/4" GAP BETWEEN BOTTOM OF TRUSS BOTTOM CHORD AND TOP OF TOP PLATE. INSTALL SIMPSON "STC" TRUSS CLIPS TO MAINTAIN GAP TO ALLOW TRUSS MOVEMENT.
7. ALL SECTIONS/DETAIL CUTS MARKED AS TYP. SHALL BE APPLIED AT ALL SIMILAR CONDITIONS ON ENTIRE PLAN.
8. TRUSS MANUFACTURER TO DESIGN NECESSARY TEMPORARY/PERMENANT BRACING AND SHALL SPECIFY ON SHOP DRAWINGS.
9. TRUSS MANUFACTURER TO SPECIFY NECESSARY CONNECTORS AND FASTENERS FOR ALL CONNECTIONS INCLUDING BUT NOT LIMITED TO UPLIFT CONNECTORS, HANGERS.
10. PROVIDE SOLID BLOCKING OF SAME SIZE WITHIN FLOOR SYSTEM UNDER ALL JACK STUDS, KING STUDS & POSTS FROM ABOVE.
11. PROVIDE MIN. (3) 2x POST UNDER ALL GIRDER TRUSSES UNLESS NOTED OTHERWISE.
12. PROVIDE MIN. TWO JACK STUDS + TWO KING STUDS AT ALL HEADERS UNLESS NOTED OTHERWISE.
13. ALL WALL STUDS SHALL BE SPF#2 OR EQ. APPROVED AND SPACED AT MAX. 16" O.C. UNLESS NOTED OTHERWISE.

PLAN LEGENDS & SYMBOLS:

- INDICATES BEARING WALL
- INDICATES DRAIN HOLE FROM ABOVE
- INDICATES JOIST/TRUSS HANEGR (REFER TO SHOP DWGS)
- INDICATES FRAMING DIRECTION
- INDICATES REBAR DIRECTION
- (_J+_S) — INDICATES NO. OF KING STUDS AT EACH END; INDICATES NO. OF JACK STUDS AT EACH END
- WF?? — INDICATES WALL FOOTING; WIDTH OF WALL FOOTING IN INCHES
- TS?? — INDICATES THICKENED SLAB; WIDTH OF THICKENED SLAB IN INCHES
- F.x.x — INDICATES ISOLATED COLUMN FOOTING; INDICATES SIZE OF FOOTING IN DECIMAL FEET
- ML?? — MICROLAM LVL 2.0E; DEPTH OF MICROLAM LVL IN INCHES
- LSL?? — LAMINATED STRAND LUMBER 1.7E; DEPTH OF TIMBERSTAND LSL BEAM IN INCHES
- PSL?? — PARALLAM STRAND LUMBER 2.0E; WIDTHxDEPTH OF MEMBER
- CC — COLUMN CAP
- CB — COLUMN BASE
- HD — HOLD DOWN ANCHOR
- MS — METAL STRAP
- H — JOIST/TRUSS/BEAM HANGER
- HC — HURRICANE CLIPS

MICROLAM LVL BEAM SCHEDULE

MARK	DESCRIPTION
(2) ML10	(2) 1 3/4" x 9 1/2" LVL - 1.9E
(2) ML12	(2) 1 3/4" x 11 7/8" LVL - 1.9E
(3) ML10	(3) 1 3/4" x 9 1/2" LVL - 1.9E
(3) ML12	(3) 1 3/4" x 11 7/8" LVL - 1.9E
(3) ML16	(3) 1 3/4" x 16" LVL - 1.9E
(4) ML12	(4) 1 3/4" x 11 7/8" LVL - 1.9E

PARALLAM PSL POST SCHEDULE

MARK	DESCRIPTION
PSL66	5 1/4" x 5 1/4" PSL 1.8E

STEEL COLUMN SCHEDULE

MARK	DESCRIPTION
PIPE3-ADJ-11GA	3"Ø x 11 GA. ADJUSTABLE STEEL PIPE COLUMN
PIPE3.5-ADJ-SCHD40	3 1/2"Ø (O.D.) SCHEDULE 40 ADJUSTABLE STEEL PIPE COLUMN
PIPE4-ADJ-11GA	4"Ø x 11GA. ADJUSTABLE STEEL PIPE COLUMN

© COPYRIGHT 2016
Structural Engineering content of this drawings are property of structBIM LLC and are issued for this project only. Any re-use or re-production of these drawings shall not be done without written consent of structBIM LLC. These drawings are to be read in conjuction with project specifications and drawings from other consultants. These drawings shall not be used as shop drawings. Do not scale drawings, use dimensions as specified.

GTM ARCHITECTS

7735 OLD GEORGETOWN ROAD
SUITE 700
BETHESDA, MD 20814
(240)333-2000
(240)333-2001 FAX
WWW.GTMARCHITECTS.COM

GTM

Seal

STATE OF MARYLAND — MICHAEL KANE — 40082 — PROFESSIONAL ENGINEER

Consultant

structBIM ENGINEERS
WE DESIGN....WE BIM
46400 BENEDICT DR, SUITE #211
PHONE: 703-657-4481
E-MAIL: info@structBIM.com

Project

19 HIGH STREET LOT 4
BROOKVILLE, MD

LOT 4

I certify that these documents were prepared or approved by me, and that I am a duly licensed Professional Engineer under the laws of the State of Maryland, license number 40082, Expiration Date: 02-13-2023.

Issue Description	*Date*

structBIM Project No.	22-0165
Checked By	KK
Drawn By	KK
Scale	1/4" = 1'-0"

Sheet Title

ROOF FRAMING PLAN

Sheet No.

S4

COPYRIGHT, 2016 structBIMEngineers, LLC.

PLOTTED ON: 4/15/2022 12:51:47 PM

FILE NAME:

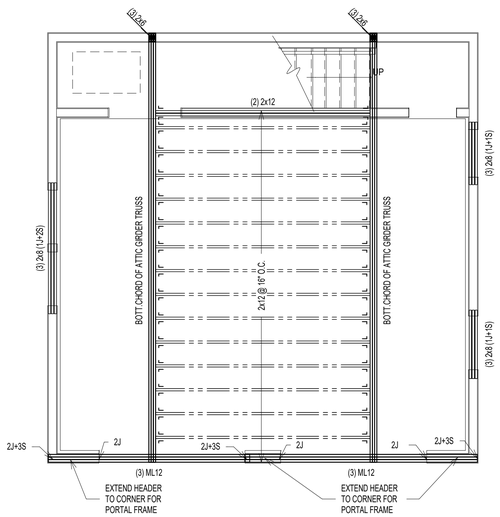

3 / S5 LOFT FLOOR FRAMING PLAN
SCALE: 1/4" = 1'-0"

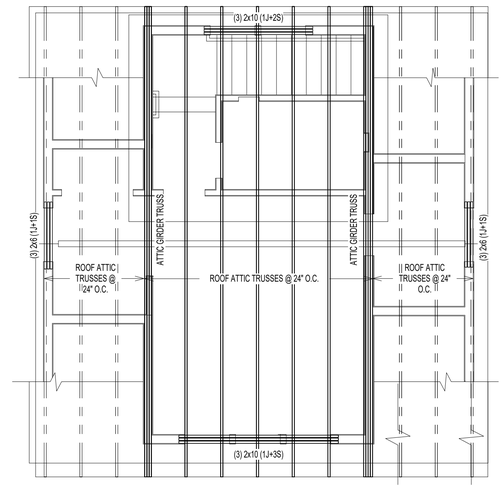

1 / S5 ATTIC ROOF FRAMING PLAN
SCALE: 1/4" = 1'-0"

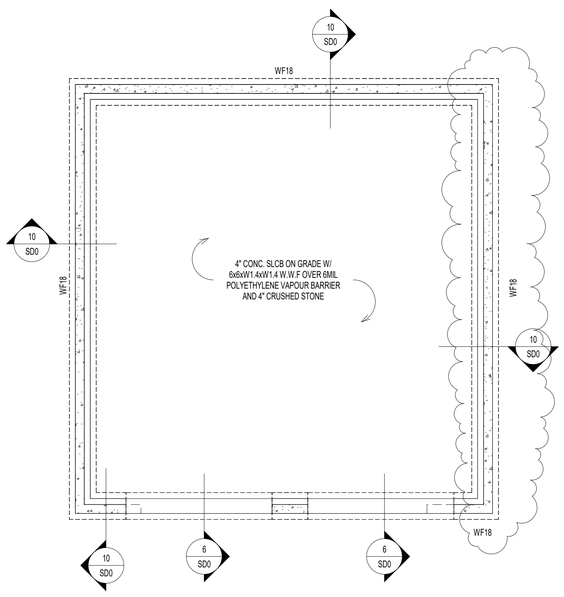

4 / S5 FOUNDATION PLAN
SCALE: 1/4" = 1'-0"

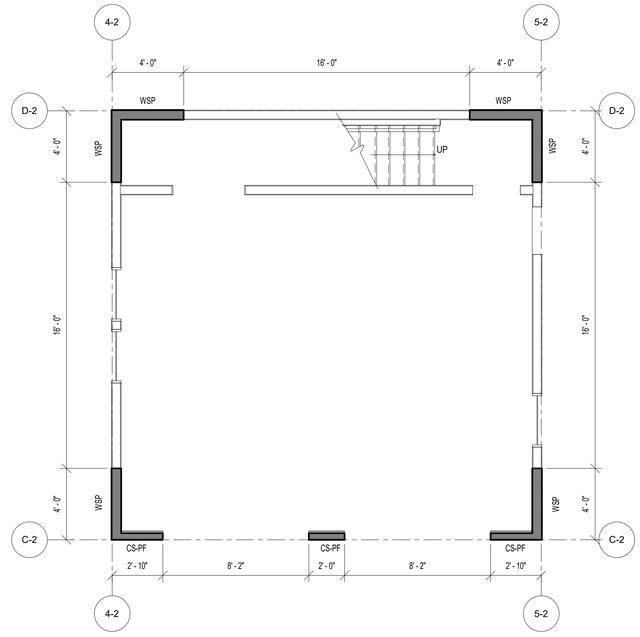

2 / S5 SECOND FLOOR WALL BRACING PLAN
SCALE: 1/4" = 1'-0"

REVIEWED
By Michael Kyne at 2:23 pm, May 23, 2022

APPROVED
Montgomery County
Historic Preservation Commission

NOTES:

1. ALL TRUSSES SHALL BE PRE-FABRICATED ENGINEERED ROOF TRUSSES AND SHALL BE INSTALLED PER TRUSS MANUFACTURER'S LAYOUT AND DESIGN. SUBMIT SIGNED AND SEALED SHOP DRAWINGS FOR REVIEW.
2. ALL ROOF SHEATHING SHALL BE APA RATED 7/16" C-C, C-D OR STRUCTURAL II WITH SPAN RATING OF 48/24 PER "AMERICAN PLYWOOD ASSOCIATION". PROVIDE MIN. NAILING PATTERN W/ 8d COMMON NAILS @ 6" O.C. ON EDGES AND 12" O.C. IN FIELD. PROVIDE PLYWOOD CLIPS AT PLYWOOD EDGES BETWEEN EACH FRAMING MEMBER.
3. TRUSS LAYOUT SHOWN ON THESE DRAWINGS ARE FOR SCHEMATIC PURPOSES ONLY AND TO REFLECT DESIGN INTENT FOR OTHER FRAMING MEMBERS. THESE DRAWINGS SHALL NOT BE CONSIDERED AS SHOP DRAWINGS. TRUSS DESIGN DRAWINGS PREPARED BY TRUSS MANUFACTURER SHALL BE USED FOR TRUSS LAYOUT AND COORDINATION. NOTIFY ENGINEER IF VARIATION IS MADE IN TRUSS DESIGN DRAWINGS THAT AFFECTS ORIGINAL DESIGN INTENT.
4. COORDINATE ROOF SLOPES, VALLEYS, HEEL HEIGHTS WITH ARCHITECTURAL DRAWINGS.
5. INSTALL MINIMUM H2.5A HURRICANE CLIPS AT EACH TRUSS BEARING UNLESS SPECIFIED ON SHOP DRAWINGS.
6. AT ALL NON LOAD BEARING WALLS MAINTAIN 1/4" GAP BETWEEN BOTTOM OF TRUSS BOTTOM CHORD AND TOP OF TOP PLATE. INSTALL SIMPSON "STC" TRUSS CLIPS TO MAINTAIN GAP TO ALLOW TRUSS MOVEMENT.
7. ALL SECTIONS/DETAIL CUTS MARKED AS TYP. SHALL BE APPLIED AT ALL SIMILAR CONDITIONS ON ENTIRE PLAN.
8. TRUSS MANUFACTURER TO DESIGN NECESSARY TEMPORARY/PERMENANT BRACING AND SHALL SPECIFY ON SHOP DRAWINGS.
9. TRUSS MANUFACTURER TO SPECIFY NECESSARY CONNECTORS AND FASTENERS FOR ALL CONNECTIONS INCLUDING BUT NOT LIMITED TO UPLIFT CONNECTORS, HANGERS.
10. PROVIDE SOLID BLOCKING OF SAME SIZE WITHIN FLOOR SYSTEM UNDER ALL JACK STUDS, KING STUDS & POSTS FROM ABOVE.
11. PROVIDE MIN. (3) 2x POST UNDER ALL GIRDER TRUSSES UNLESS NOTED OTHERWISE.
12. PROVIDE MIN. TWO JACK STUDS + TWO KING STUDS AT ALL HEADERS UNLESS NOTED OTHERWISE.
13. ALL WALL STUDS SHALL BE SPF#2 OR EQ. APPROVED AND SPACED AT MAX. 16" O.C. UNLESS NOTED OTHERWISE.

PLAN LEGENDS & SYMBOLS:

- INDICATES BEARING WALL
- INDICATES DRAIN HOLE FROM ABOVE
- INDICATES JOIST/TRUSS HANEGR (REFER TO SHOP DWGS)
- INDICATES FRAMING DIRECTION
- INDICATES REBAR DIRECTION
- (_J+_S) — INDICATES NO. OF KING STUDS AT EACH END; INDICATES NO. OF JACK STUDS AT EACH END
- WF?? — INDICATES WALL FOOTING; WIDTH OF WALL FOOTING IN INCHES
- TS?? — INDICATES THICKENED SLAB; WIDTH OF THICKENED SLAB IN INCHES
- Fx.x — INDICATES ISOLATED COLUMN FOOTING; INDICATES SIZE OF FOOTING IN DECIMAL FEET
- ML?? — MICROLAM LVL 2.0E; DEPTH OF MICROLAM LVL IN INCHES
- LSL?? — LAMINATED STRAND LUMBER 1.7E; DEPTH OF TIMBERSTAND LSL BEAM IN INCHES
- PSL?? — PARALLAM STRAND LUMBER 2.0E; WIDTHxDEPTH OF MEMBER
- CC — COLUMN CAP
- CB — COLUMN BASE
- HD — HOLD DOWN ANCHOR
- MS — METAL STRAP
- H — JOIST/TRUSS/BEAM HANGER
- HC — HURRICANE CLIPS

Ultimate Wind Speed (mph)		115							
BWL Designation		C-2		D-2		4-2		5-2	
No. of Floors above BWL		0		0		0		0	
BWP Method		CS-PF		WSP		WSP		WSP	
Average BWL Spacing (ft)		24		24		24		24	
Tabular Requirement (ft)		3.90		4.30		4.30		4.30	
Adjustments	Exposure	B	1.00	B	1.00	B	1.00	B	1.00
	Eave-to-Ridge Ht. (ft)	15.00	1.30	15.00	1.30	15.00	1.30	15.00	1.30
	Max. Wall Ht. (ft)	9.00	0.95	9.00	0.95	9.00	0.95	9.00	0.95
	No. of BWLs	2	1.00	2	1.00	3	1.30	3	1.30
	Omit Interior Finish?	No	1.00	No	1.00	No	1.00	No	1.00
	Added Hold-downs?	No	1.00	No	1.00	No	1.00	No	1.00
	Joints Blocked?	Yes	1.00	Yes	1.00	Yes	1.00	Yes	1.00
	Fasteners @ 4" o.c.?	No	1.00	No	1.00	No	1.00	No	1.00
Required BWP Length (ft)		4.82		5.31		6.90		6.90	
Actual BWPs	BWP	Method	Length	Method	Length	Method	Length	Method	Length
	Contributing Length (ft) 1	CS-PF	2.81	WSP	4.00	WSP	4.00	WSP	4.00
	2	CS-PF	2.00	WSP	4.00	WSP	4.00	WSP	4.00
	3	CS-PF	2.81						
	4								
	5								
	6								
	7								
Actual BWP Length (ft)		7.62		8.00		8.00		8.00	
Actual ≥ Required?		PASS		PASS		PASS		PASS	
BWPs ≤ 20' Apart?		Yes		Yes		Yes		Yes	
≥ 2 Panels in BWL?		Yes		Yes		Yes		Yes	
BWP 10' from Ends?		Yes		Yes		Yes		Yes	
Continuous Sheathing End Conditions		End 1	End 2	End 1	End 2	End 1	End 2	End 1	End 2
		1	1	1	1	1	1	1	1
BWL Compliance		PASS		PASS		PASS		PASS	

WALL BRACING/SHEAR WALL SCHEDULE

MARK	DESCRIPTION	FASTENING PATTERN
CS-PF	7/16" APA RATED OSB SHEATHING	8d COMMON NAILS (2 1/2" x 0.131") @ 6" O.C. ON EDGES & 12" O.C. IN-FIELD
CS-WSP	7/16" APA RATED OSB SHEATHING	8d COMMON NAILS (2 1/2" x 0.131") @ 6" O.C. ON EDGES & 12" O.C. IN-FIELD
GB (BOTH SIDES)	1/2" GYPSUM WALL BOARD SHEATHING	1 1/2 " GALVANIZED ROOFING NAILS OR 1 1/2" GALVANIZED STAPLES OR 1 1/4" SCREWS TYPE W OR S @ 7" O.C. ON EDGES & IN-FIELD
GB (ONE SIDE)	1/2" GYPSUM WALL BOARD SHEATHING	1 1/2 " GALVANIZED ROOFING NAILS OR 1 1/2" GALVANIZED STAPLES OR 1 1/4" SCREWS TYPE W OR S @ 7" O.C. ON EDGES & IN-FIELD
WSP	7/16" APA RATED OSB SHEATHING	8d COMMON NAILS (2 1/2" x 0.131") @ 6" O.C. ON EDGES & 12" O.C. IN-FIELD

© COPYRIGHT 2016
Structural Engineering content of this drawings are property of structBIM LLC and are issued for this project only. Any re-use or re-production of these drawings shall not be done without written consent of structBIM LLC. These drawings are to be read in conjuction with project specifications and drawings from other consultants. These drawings shall not be used as shop drawings. Do not scale drawings, use dimensions as specified.

GTM ARCHITECTS
7735 OLD GEORGETOWN ROAD
SUITE 700
BETHESDA, MD 20814
(240)333-2000
(240)333-2001 FAX
WWW.GTMARCHITECTS.COM
GTM

Seal

STATE OF MARYLAND — KRISHNA KANDEL — 40082 — PROFESSIONAL ENGINEER

Consultant

structBIM ENGINEERS
WE DESIGN....WE BIM
46400 BENEDICT DR, SUITE #211
PHONE: 703-657-4481
E-MAIL: info@structBIM.com

Project

19 HIGH STREET LOT 4
BROOKVILLE, MD

LOT 4

I certify that these documents were prepared or approved by me, and that I am a duly licensed Professional Engineer under the laws of the State of Maryland, license number 40082, Expiration Date: 02-13-2023.

Issue Description	*Date*

structBIM Project No.	22-0165
Checked By	KK
Drawn By	KK
Scale	1/4" = 1'-0"

Sheet Title

GARAGE FRAMING PLAN

Sheet No.

S5

COPYRIGHT, 2016 structBIMEngineers, LLC.
PLOTTED ON: 4/18/2022 12:51:48 PM
FILE NAME:

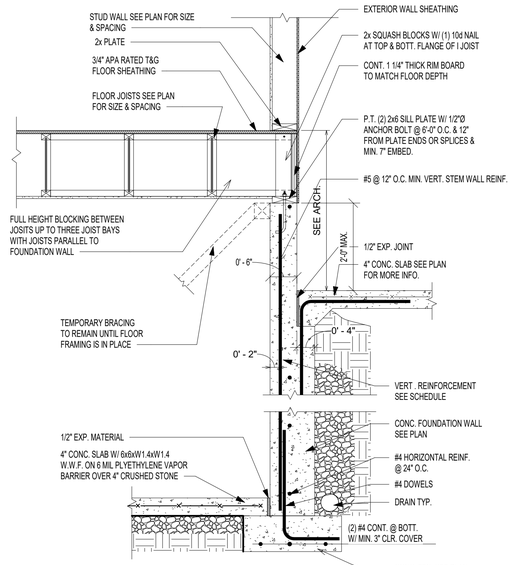

12 SD0 TYP. FOUNDATION WALL SECTION @ GARAGE
SCALE: 3/4" = 1'-0"

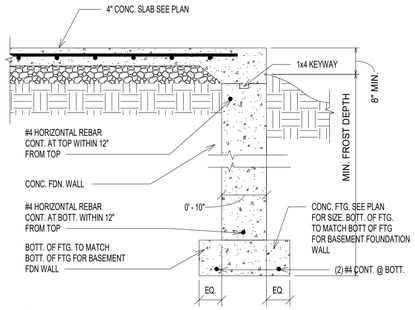

9 SD0 SD0_12_FNDN_CONC_PORCH1
SCALE: 3/4" = 1'-0"

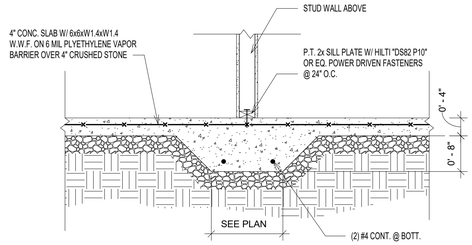

5 SD0 INT. WALL THICKENED SLAB
SCALE: 3/4" = 1'-0"

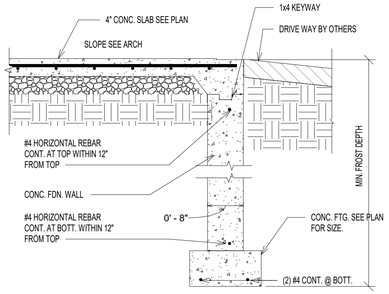

6 SD0 FOUNDATION WALL @ GARAGE ENTRY
SCALE: 3/4" = 1'-0"

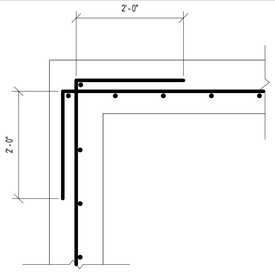

TYP. CORNER REINFORCEMENT DETAIL (PLAN VIEW)

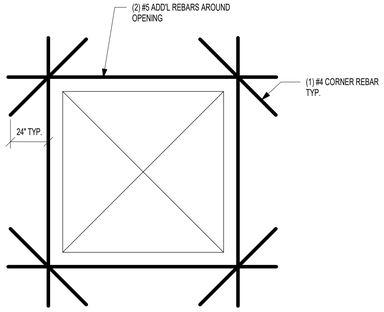

TYP. REINFORCEMENT AROUND OEPNING(ELEVATION VIEW)

1 SD0 TYP. REINFORCEMENT AT WALL CORNER & OPENING
SCALE: 3/4" = 1'-0"

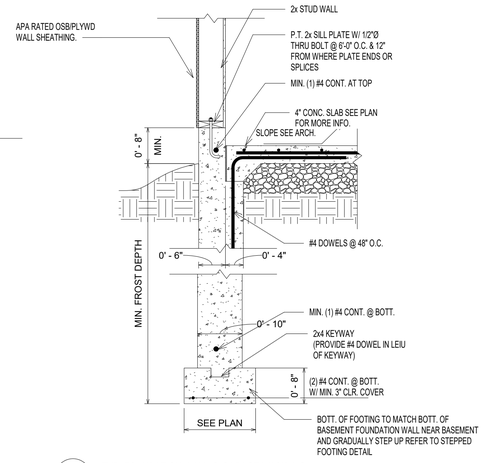

10 SD0 TYP. FOUNDATION WALL @ GARAGE W/ SIDING
SCALE: 3/4" = 1'-0"

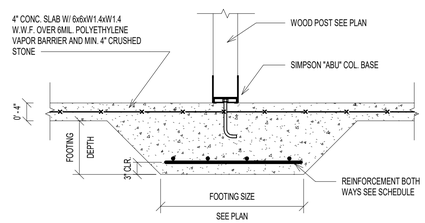

7 SD0 TYPICAL WOOD COLUMN FOOTING
SCALE: 3/4" = 1'-0"

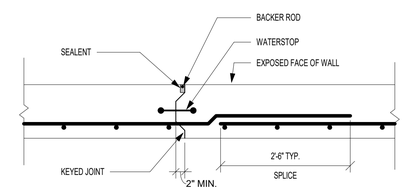

NOTE: PROVIDE CONSTRUCTION OR CONTROL JOINTS IN FOUNDATION WALLS AT EVERY 40'-0" TYPICAL.

2 SD0 TYP CONTROL JOINT @ FOUNDATION WALL
SCALE: 3/4" = 1'-0"

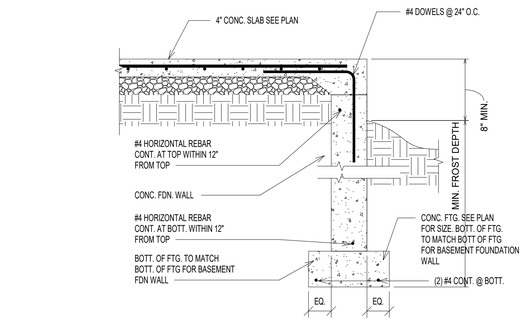

13 SD0 SECTION
SCALE: 3/4" = 1'-0"

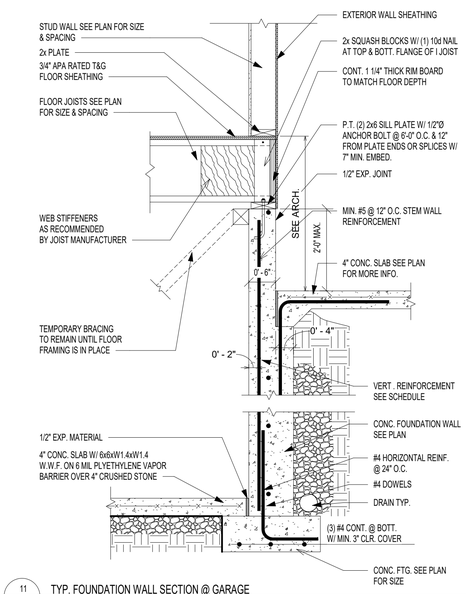

11 SD0 TYP. FOUNDATION WALL SECTION @ GARAGE
SCALE: 3/4" = 1'-0"

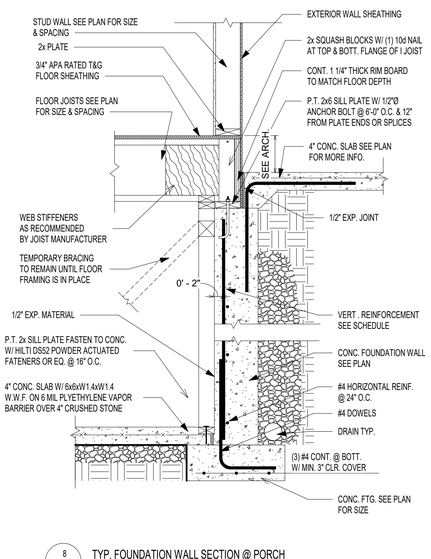

8 SD0 TYP. FOUNDATION WALL SECTION @ PORCH
SCALE: 3/4" = 1'-0"

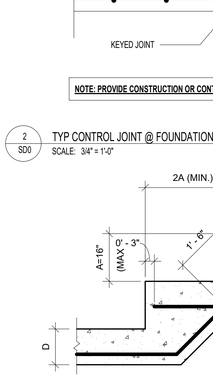

NOTE: SEE PLAN FOR REINFORCING AND OTHER INFO.

3 SD0 TYP. STEPPED FOOTING DETAIL
SCALE: 1/2" = 1'-0"

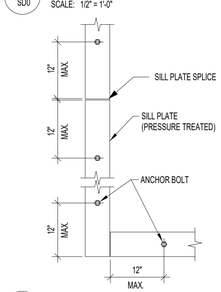

NOTES:

1. MINIMUM SILL BOLTING TO CONCRETE SHALL BE 1/2"Ø ANCHOR BOLTS, OR EQUAL, AT 6'-0" O.C. WITH 7" MINIMUM EMBEDMENT.

2. ALL ANCHORS FOR SILL PLATES SUPPORTING SHEAR WALLS (SW) SHALL HAVE MIN. 3"x3" STEEL WASHERS AND SHALL EXTEND A MINIMUM OF 2" ABOVE TOP OF SILL.

3. PROVIDE MINIMUM (2) BOLTS PER PIECE.

4. SEE OTHER DETAILS FOR USE OF MUDSILL ANCHORS IN LIEU OF ANCHOR BOLTS.

4 SD0 TYP. SILL PLATE ANCHORAGE
SCALE: 3/4" = 1'-0"

REVIEWED
By Michael Kyne at 2:23 pm, May 23, 2022

APPROVED
Montgomery County
Historic Preservation Commission

© COPYRIGHT 2016
Structural Engineering content of this drawings are property of structBIM LLC and are issued for this project only. Any re-use or re-production of these drawings shall not be done without written consent of structBIM LLC. These drawings are to be read in conjuction with project specifications and drawings from other consultants. These drawings shall not be used as shop drawings. Do not scale drawings, use dimensions as specified.

GTM ARCHITECTS

7735 OLD GEORGETOWN ROAD
SUITE 700
BETHESDA, MD 20814
(240)333-2000
(240)333-2001 FAX
WWW.GTMARCHITECTS.COM

GTM

Seal

STATE OF MARYLAND
MICHAEL KANE
40082
PROFESSIONAL ENGINEER

Consultant

structBIM ENGINEERS
WE DESIGN....WE BIM
46400 BENEDICT DR, SUITE #211
PHONE: 703-657-4481
E-MAIL: info@structBIM.com

Project

19 HIGH STREET LOT 4
BROOKVILLE, MD

LOT 4

I certify that these documents were prepared or approved by me, and that I am a duly licensed Professional Engineer under the laws of the State of Maryland, license number 40082, Expiration Date: 02-13-2023.

Issue Description	*Date*

structBIM Project No.	22-0165
Checked By	KK
Drawn By	KK
Scale	As indicated

Sheet Title

FOUNDATION DETAILS

Sheet No.

SD0

COPYRIGHT, 2016 structBIMEngineers, LLC.

PLOTTED ON: 4/15/2022 12:51:55 PM

FILE NAME:

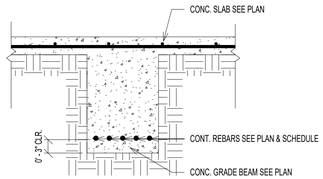

7 SD0.1 TYP. GRADE BEAM DETAIL
SCALE: 3/4" = 1'-0"

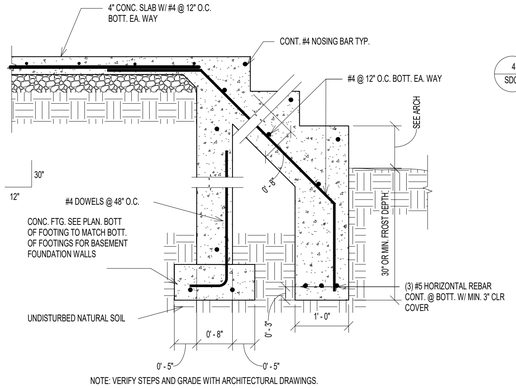

NOTE: VERIFY STEPS AND GRADE WITH ARCHITECTURAL DRAWINGS.

8 SD0.1 STEPS @ PORCH
SCALE: 3/4" = 1'-0"

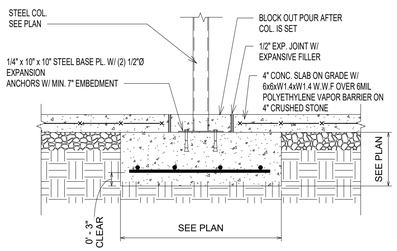

9 SD0.1 ISOLATED COLUMN FOOTING
SCALE: 3/4" = 1'-0"

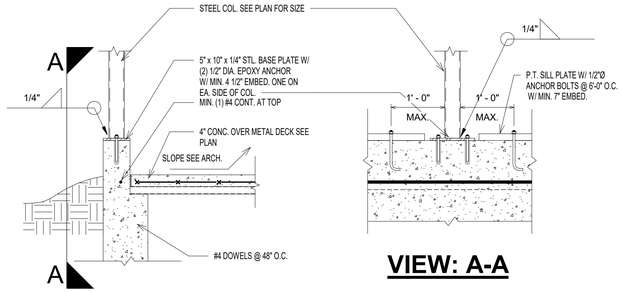

VIEW: A-A

4 SD0.1 STEEL COL. ON GARAGE FDN WALL
SCALE: 3/4" = 1'-0"

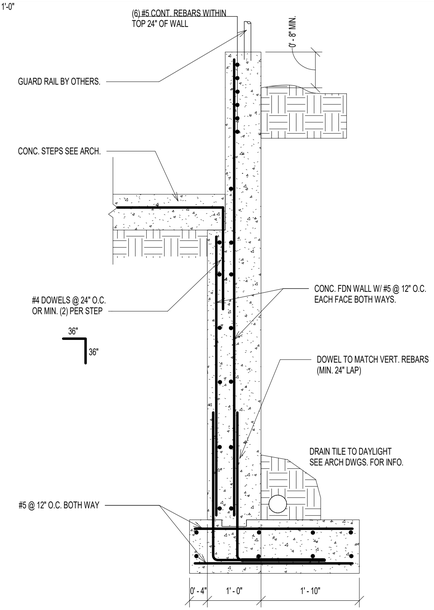

5 SD0.1 TYP. AREA WAY DETAIL
SCALE: 3/4" = 1'-0"

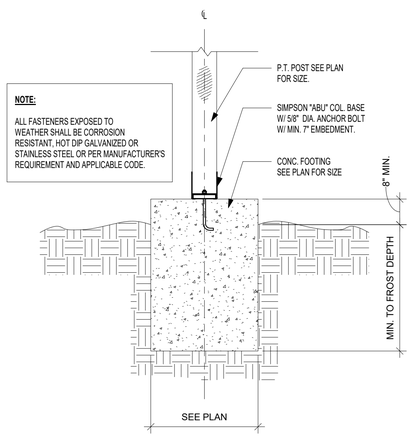

NOTE:
ALL FASTENERS EXPOSED TO WEATHER SHALL BE CORROSION RESISTANT, HOT DIP GALVANIZED OR STAINLESS STEEL OR PER MANUFACTURER'S REQUIREMENT AND APPLICABLE CODE.

6 SD0.1 DECK POST TO FTG
SCALE: 3/4" = 1'-0"

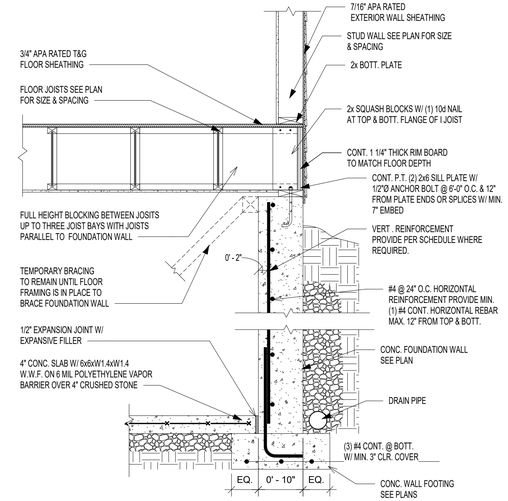

1 SD0.1 TYP. FOUNDATION WALL SECTION
SCALE: 3/4" = 1'-0"

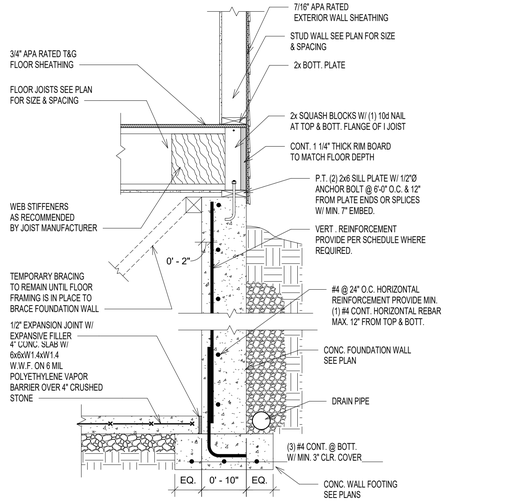

2 SD0.1 TYP. FOUNDATION WALL SECTION
SCALE: 3/4" = 1'-0"

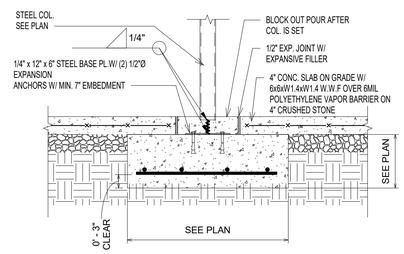

3 SD0.1 ISOLATED COLUMN FOOTING
SCALE: 3/4" = 1'-0"

REVIEWED
By Michael Kyne at 2:23 pm, May 23, 2022

APPROVED
Montgomery County
Historic Preservation Commission

© COPYRIGHT 2016
Structural Engineering content of this drawings are property of structBIM LLC and are issued for this project only. Any re-use or re-production of these drawings shall not be done without written consent of structBIM LLC. These drawings are to be read in conjuction with project specifications and drawings from other consultants. These drawings shall not be used as shop drawings. Do not scale drawings, use dimensions as specified.

GTM ARCHITECTS

7735 OLD GEORGETOWN ROAD
SUITE 700
BETHESDA, MD 20814
(240)333-2000
(240)333-2001 FAX
WWW.GTMARCHITECTS.COM

GTM

Seal

STATE OF MARYLAND
MICHAEL KANE
40082
PROFESSIONAL ENGINEER

Consultant

structBIM ENGINEERS
WE DESIGN....WE BIM
46400 BENEDICT DR, SUITE #211
PHONE: 703-657-4481
E-MAIL: info@structBIM.com

Project

19 HIGH STREET LOT 4
BROOKVILLE, MD

LOT 4

I certify that these documents were prepared or approved by me, and that I am a duly licensed Professional Engineer under the laws of the State of Maryland, license number 40082, Expiration Date: 02-13-2023.

Issue Description	*Date*

structBIM Project No.	22-0165
Checked By	KK
Drawn By	KK
Scale	3/4" = 1'-0"

Sheet Title
FOUNDATION DETAILS

Sheet No.
SD0.1

COPYRIGHT, 2016 structBIMEngineers, LLC.
PLOTTED ON: 4/18/2022 12:52:46 PM

REVIEWED
By Michael Kyne at 2:23 pm, May 23, 2022

APPROVED
Montgomery County
Historic Preservation Commission

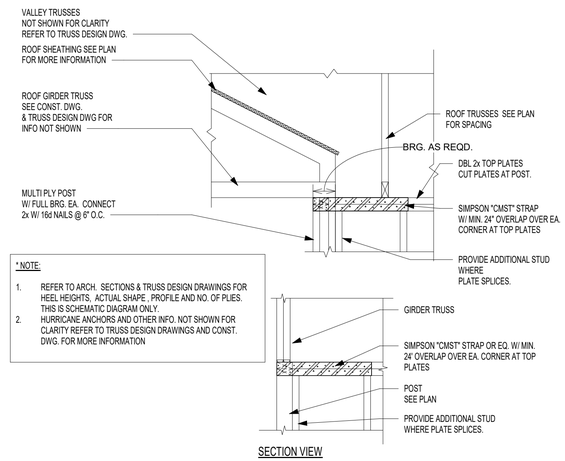

* NOTE:

1. REFER TO ARCH. SECTIONS & TRUSS DESIGN DRAWINGS FOR HEEL HEIGHTS, ACTUAL SHAPE , PROFILE AND NO. OF PLIES. THIS IS SCHEMATIC DIAGRAM ONLY.
2. HURRICANE ANCHORS AND OTHER INFO. NOT SHOWN FOR CLARITY REFER TO TRUSS DESIGN DRAWINGS AND CONST. DWG. FOR MORE INFORMATION

SECTION VIEW

10 / SD1 G.T. W/ FULL BRG ON POST @ CORNER
SCALE: 3/4" = 1'-0"

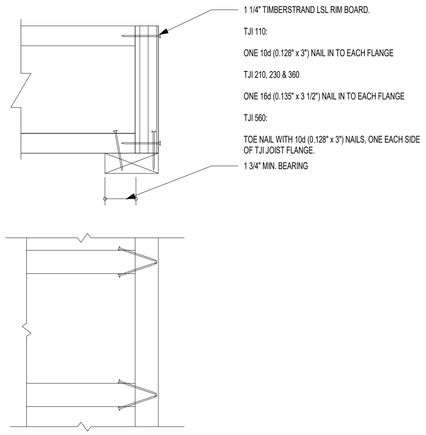

TOP VIEW

7 / SD1 RIM TO TJI JOIST CONNECTION
SCALE: 3/4" = 1'-0"

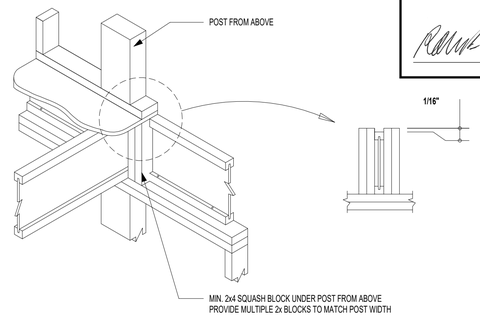

4 / SD1 JOISTS BRG @ EXT. WALL W/ POST ABOVE
SCALE: 3/4" = 1'-0"

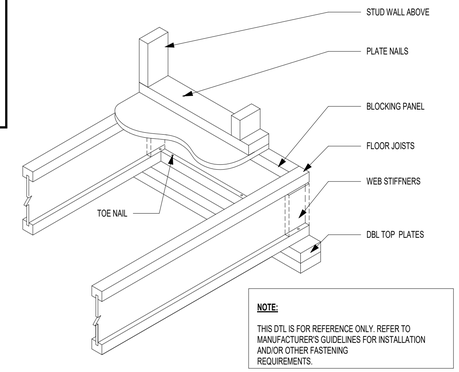

NOTE:
THIS DTL IS FOR REFERENCE ONLY. REFER TO MANUFACTURER'S GUIDELINES FOR INSTALLATION AND/OR OTHER FASTENING REQUIREMENTS.

1 / SD1 I JOIST WITH BRG WALL ABOVE
SCALE: 3/4" = 1'-0"

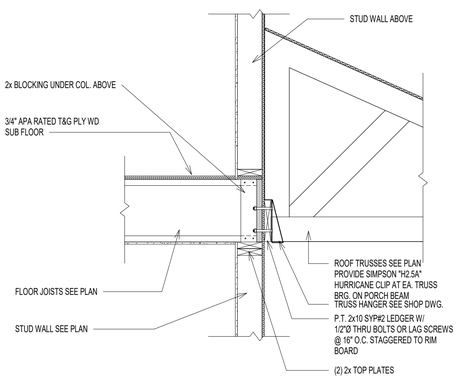

11 / SD1 SECTION @ PORCH
SCALE: 3/4" = 1'-0"

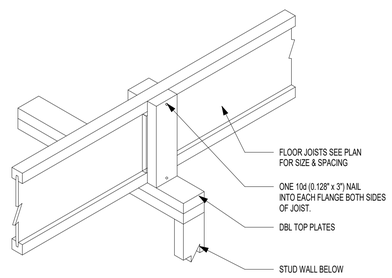

8 / SD1 TYP. SQUASH BLOCKS DETAIL
SCALE: 3/4" = 1'-0"

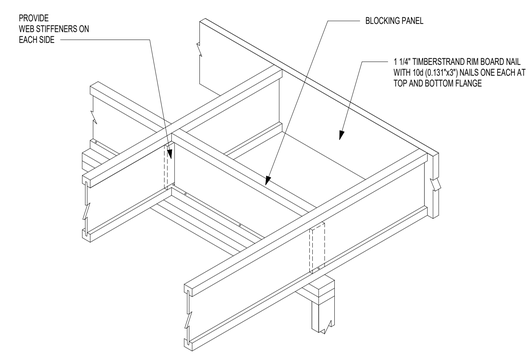

DO NOT CUT FLANGES OR WEB

5 / SD1 CANTILEVER JOIST DETAIL
SCALE: 3/4" = 1'-0"

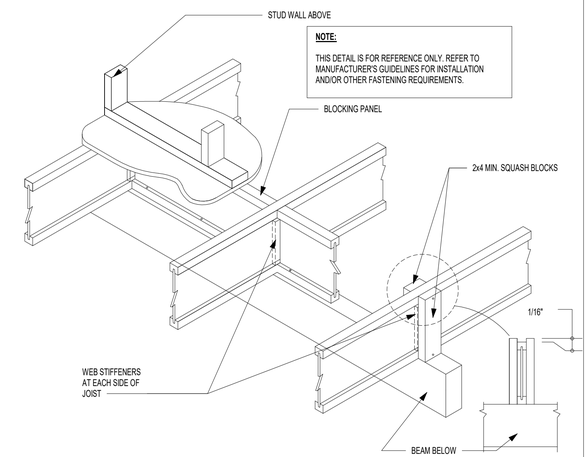

NOTE:
THIS DETAIL IS FOR REFERENCE ONLY. REFER TO MANUFACTURER'S GUIDELINES FOR INSTALLATION AND/OR OTHER FASTENING REQUIREMENTS.

2 / SD1 JOIST W/ INT. BRG. ON BEAM & BRG. WALL FROM ABOVE
SCALE: 3/4" = 1'-0"

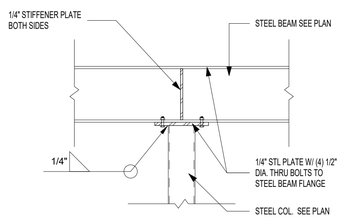

12 / SD1 STEEL BEAM TO STEEL COLUMN - INT. SUPPORT
SCALE: 3/4" = 1'-0"

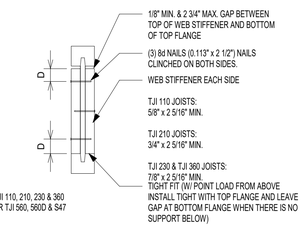

TJI JOIST SERIES	DEPTH	MINIMUM WEB STIFFENER SIZE	NAILING		
			TYPE	END	INTERMEDIATE
110	ALL	5/8" x 2 5/16"	8d (0.113" x 2 1/2")	3	3
210	ALL	3/4" x 2 5/16"			
230 & 360	ALL	7/8" x 2 5/16"			

9 / SD1 TYP. I JOIST WEB STIFFENER SCHEDULE
SCALE: 3/4" = 1'-0"

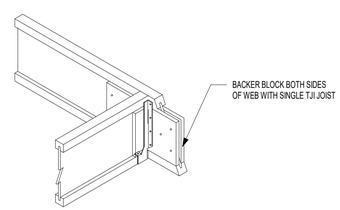

TJI	110		210		230 OR 360		560	
DEPTH	9 1/2" OR 11 7/8"	14"	9 1/2" OR 11 7/8"	14" OR 16"	9 1/2" OR 11 7/8"	14" OR 16"	11 7/8"	14" OR 16"
FILLER BLOCK (1)	2x6	2x8	2x6 + 3/8" SHEATHING	2x8 + 3/8" SHEATHING	2x6 + 1/2" SHEATHING	2x8 + 1/2" SHEATHING	(2) 2x6	(2) 2x8
BACKER BLOCK (1)	5/8" OR 3/4"		3/4" OR 7/8"		7/8" OR 1" NET		2x6	2x8

6 / SD1 SINGLE JOIST TO SINGLE JOIST CONNECTION
SCALE: 3/4" = 1'-0"

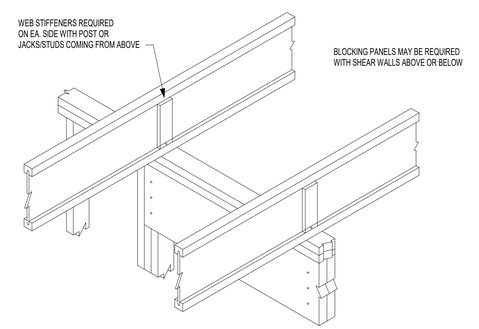

3 / SD1 INTERMEDIATE BEARING
SCALE: 3/4" = 1'-0"

© COPYRIGHT 2016
Structural Engineering content of this drawings are property of structBIM LLC and are issued for this project only. Any re-use or re-production of these drawings shall not be done without written consent of structBIM LLC. These drawings are to be read in conjuction with project specifications and drawings from other consultants. These drawings shall not be used as shop drawings. Do not scale drawings, use dimensions as specified.

GTM ARCHITECTS
7735 OLD GEORGETOWN ROAD
SUITE 700
BETHESDA, MD 20814
(240)333-2000
(240)333-2001 FAX
WWW.GTMARCHITECTS.COM
GTM

Seal

Consultant

structBIM ENGINEERS
WE DESIGN....WE BIM
46400 BENEDICT DR, SUITE #211
PHONE: 703-657-4481
E-MAIL: info@structBIM.com

Project

19 HIGH STREET LOT 4
BROOKVILLE, MD

LOT 4

I certify that these documents were prepared or approved by me, and that I am a duly licensed Professional Engineer under the laws of the State of Maryland, license number 40082, Expiration Date: 02-13-2023.

Issue Description	*Date*

structBIM Project No.	22-0165
Checked By	KK
Drawn By	KK
Scale	3/4" = 1'-0"

Sheet Title
FRAMING DETAILS

Sheet No.
SD1

COPYRIGHT, 2016 structBIMEngineers, LLC.
PLOTTED ON: 4/15/2022 12:52:03 PM

FILE NAME:

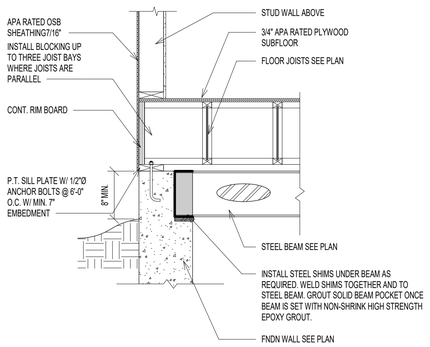

12 SD2 TYP. STEEL BEAM POCKET DETAIL
SCALE: 3/4" = 1'-0"

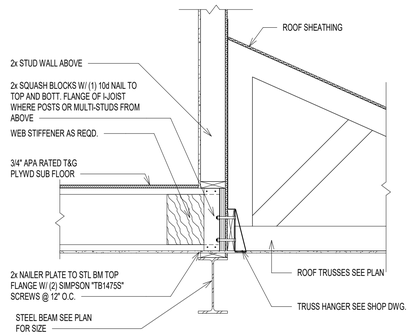

9 SD2 SECTION @ GARAGE BEAM
SCALE: 3/4" = 1'-0"

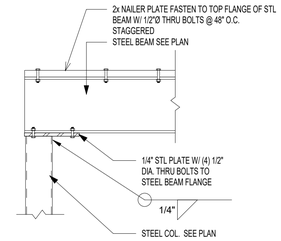

5 SD2 STEEL BEAM TO STEEL COLUMN - END SUPPORT
SCALE: 3/4" = 1'-0"

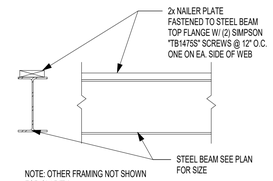

ALTERNATE FASTENERS:

NAILER PLATE MAY BE FASTENED TO TOP FLANGE W/ 1/2"Ø THRU BOLTS @ 48" O.C. STAGGERED

1 SD2 TYP. STEEL BEAM NAILER PLATE CONNECTION
SCALE: 3/4" = 1'-0"

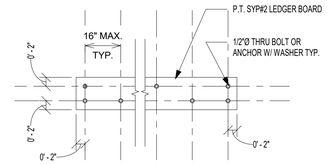

6 SD2 TYP. DECK CONNECTION DETAIL
SCALE: 3/4" = 1'-0"

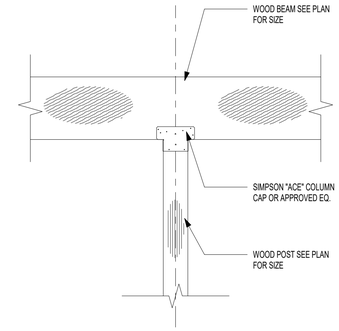

2 SD2 INTERIOR POST W/ COL. CAP CONN.
SCALE: 3/4" = 1'-0"

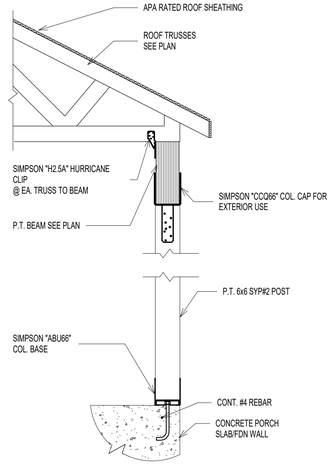

10 SD2 SECTION AT PORCH ROOF
SCALE: 3/4" = 1'-0"

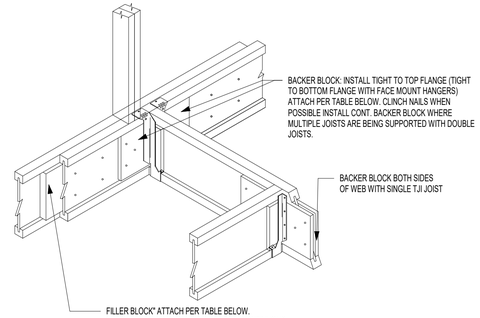

TJI	110		210		230 OR 360		560	
DEPTH	9 1/2" OR 11 7/8"	14"	9 1/2" OR 11 7/8"	14" OR 16"	9 1/2" OR 11 7/8"	14" OR 16"	11 7/8"	14" OR 16"
FILLER BLOCK (1)	2x6	2x8	2x6 + 3/8" SHEATHING	2x8 + 3/8" SHEATHING	2x6 + 1/2" SHEATHING	2x8 + 1/2" SHEATHING	(2) 2x6	(2) 2x8
BACKER BLOCK (1)	5/8" OR 3/4"		3/4" OR 7/8"		7/8" OR 1" NET		2x6	2x8

7 SD2 TYPICAL DBL JOISTS CONNECTION W/ JOIST SUPPORTED
SCALE: 3/4" = 1'-0"

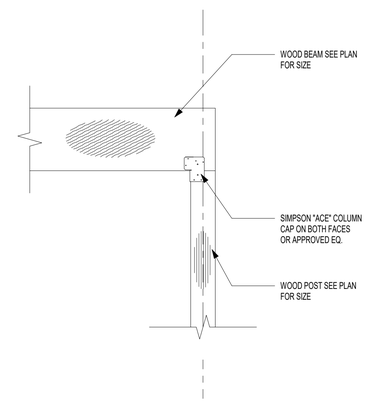

3 SD2 END COL. TO BEAM BEARING CONNECTION
SCALE: 3/4" = 1'-0"

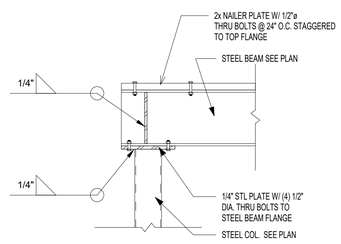

11 SD2 SECTION
SCALE: 3/4" = 1'-0"

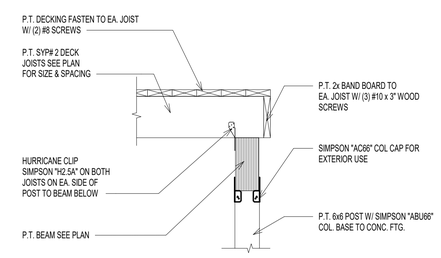

8 SD2 TYP. DECK POST CONNECTION W/ POST FROM ABOVE
SCALE: 3/4" = 1'-0"

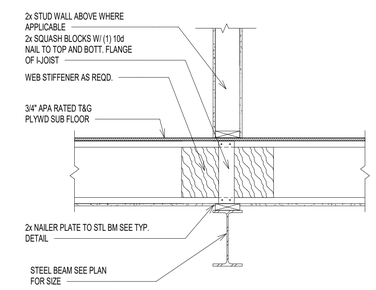

4 SD2 TYP. JOIST BEARING ON STEEL BEAM
SCALE: 3/4" = 1'-0"

REVIEWED
By Michael Kyne at 2:23 pm, May 23, 2022

APPROVED
Montgomery County
Historic Preservation Commission

© COPYRIGHT 2016
Structural Engineering content of this drawings are property of structBIM LLC and are issued for this project only. Any re-use or re-production of these drawings shall not be done without written consent of structBIM LLC. These drawings are to be read in conjuction with project specifications and drawings from other consultants. These drawings shall not be used as shop drawings. Do not scale drawings, use dimensions as specified.

GTM ARCHITECTS

7735 OLD GEORGETOWN ROAD
SUITE 700
BETHESDA, MD 20814
(240)333-2000
(240)333-2001 FAX
WWW.GTMARCHITECTS.COM

GTM

Seal

STATE OF MARYLAND
MICHAEL KANE
40082
PROFESSIONAL ENGINEER

Consultant

structBIM ENGINEERS
WE DESIGN....WE BIM
46400 BENEDICT DR, SUITE #211
PHONE: 703-657-4481
E-MAIL: info@structBIM.com

Project

19 HIGH STREET LOT 4
BROOKVILLE, MD

LOT 4

I certify that these documents were prepared or approved by me, and that I am a duly licensed Professional Engineer under the laws of the State of Maryland, license number 40082, Expiration Date: 02-13-2023.

Issue Description	*Date*

structBIM Project No.	22-0165
Checked By	KK
Drawn By	KK
Scale	3/4" = 1'-0"

Sheet Title

FRAMING DETAILS

Sheet No.

SD2

COPYRIGHT, 2016 structBIMEngineers, LLC.
PLOTTED ON: 4/15/2022 12:52:06 PM

Point Load Connector Spacing
8- Screw Connection

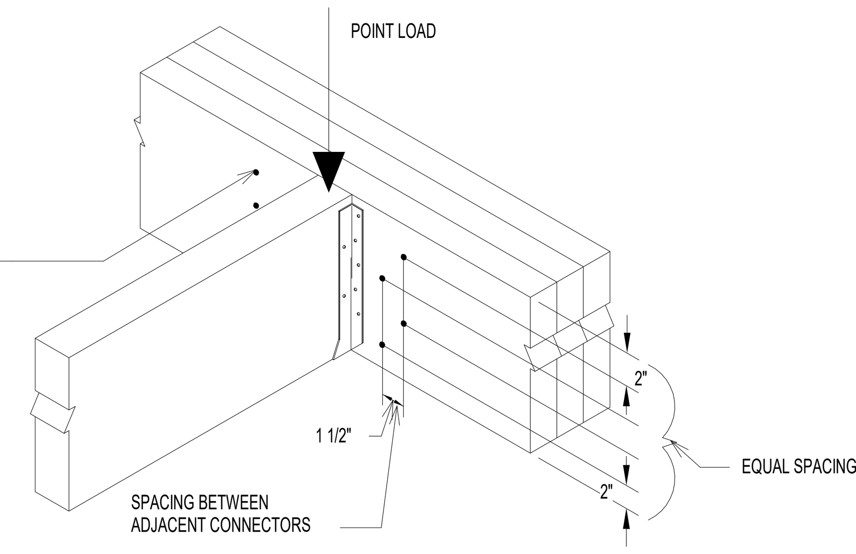

2 / SD3 — LVL BEAM CONNECTION AT POINT LOAD
SCALE: 3/4" = 1'-0"

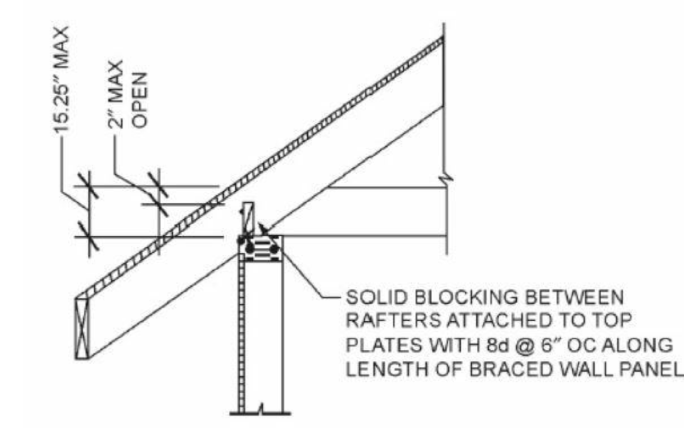

3 / SD3 — TYPICAL ROOF BEARING @ BRACED WALL PANEL
SCALE: 3/4" = 1'-0"

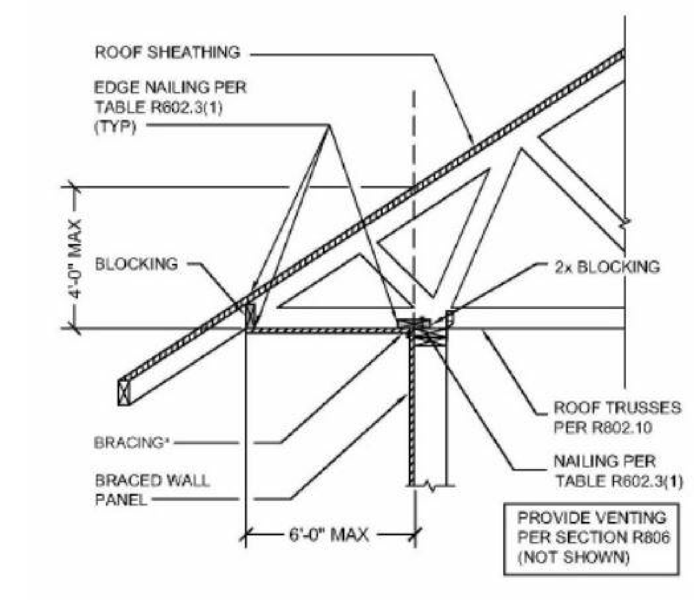

4 / SD3 — TYPICAL ROOF BEARING @ BRACED WALL PANEL
SCALE: 3/4" = 1'-0"

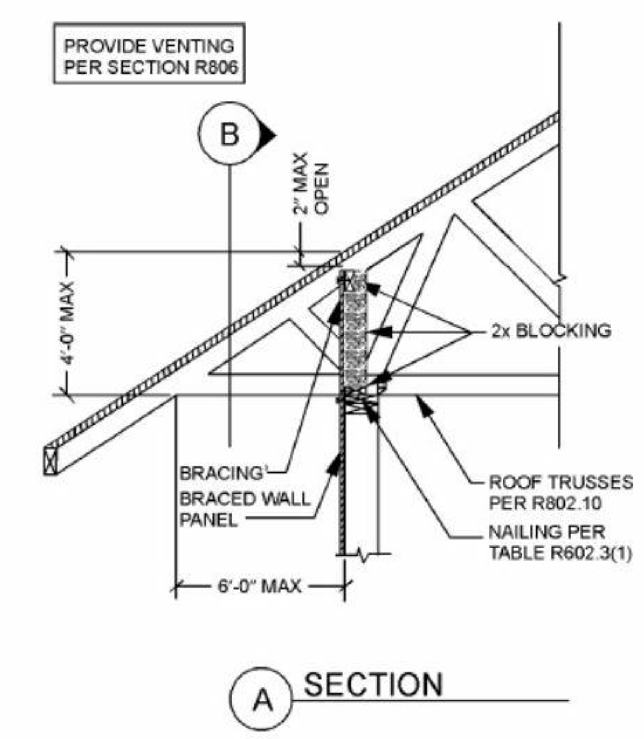

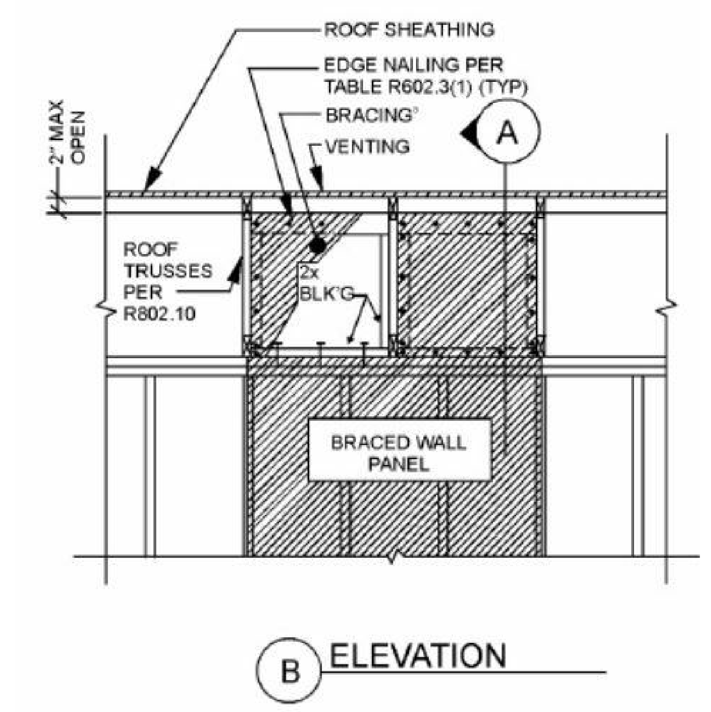

5 / SD3 — TYPICAL ROOF BEARING @ BRACED WALL PANEL
SCALE: 3/4" = 1'-0"

ALLOWABLE HOLES

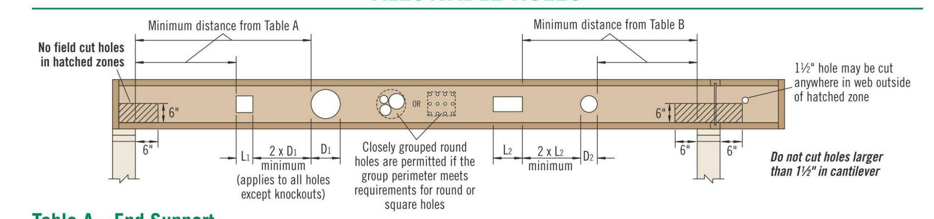

Table A—End Support
Minimum distance from edge of hole to inside face of nearest end support

Depth	TJI®	Round Hole Size									Square or Rectangular Hole Size								
		2"	3"	4"	5"	6½"	7"	8⅞"	11"	13"	2"	3"	4"	5"	6½"	7"	8⅞"	11"	13"
9½"	110	1'-0"	1'-6"	2'-0"	2'-6"	5'-0"					1'-0"	1'-6"	2'-6"	3'-6"	4'-6"				
	210	1'-0"	1'-6"	2'-0"	3'-0"	5'-0"					1'-0"	2'-0"	2'-6"	4'-0"	5'-0"				
	230	1'-0"	2'-0"	2'-6"	3'-6"	5'-6"					1'-0"	2'-0"	3'-0"	4'-6"	5'-0"				
11⅞"	110	1'-0"	1'-0"	1'-0"	1'-0"	2'-6"	2'-6"	5'-0"			1'-0"	1'-0"	1'-6"	2'-6"	4'-6"	4'-6"	6'-0"		
	210	1'-0"	1'-0"	1'-0"	1'-6"	2'-6"	3'-0"	5'-6"			1'-0"	1'-0"	2'-0"	3'-0"	5'-0"	5'-6"	6'-6"		
	230	1'-0"	1'-0"	1'-0"	2'-0"	3'-0"	3'-6"	6'-0"			1'-0"	1'-0"	2'-0"	3'-0"	5'-6"	5'-6"	7'-0"		
	360	1'-0"	1'-0"	1'-6"	2'-6"	4'-6"	5'-0"	7'-0"			1'-0"	1'-0"	2'-6"	4'-0"	6'-6"	6'-6"	7'-6"		
	560	1'-0"	1'-0"	1'-6"	3'-0"	5'-0"	5'-6"	8'-0"			1'-0"	2'-0"	3'-6"	5'-0"	7'-0"	7'-6"	8'-0"		
14"	110	1'-0"	1'-0"	1'-0"	1'-0"	1'-0"	1'-0"	2'-6"	5'-0"		1'-0"	1'-0"	1'-0"	1'-6"	3'-6"	4'-0"	6'-0"	8'-0"	
	210	1'-0"	1'-0"	1'-0"	1'-0"	1'-0"	1'-6"	3'-0"	6'-0"		1'-0"	1'-0"	1'-0"	2'-0"	4'-0"	4'-6"	6'-6"	8'-6"	
	230	1'-0"	1'-0"	1'-0"	1'-0"	1'-6"	2'-0"	3'-6"	6'-6"		1'-0"	1'-0"	1'-0"	2'-0"	4'-0"	5'-0"	7'-0"	9'-0"	
	360	1'-0"	1'-0"	1'-0"	1'-0"	2'-6"	3'-0"	5'-6"	8'-0"		1'-0"	1'-0"	1'-0"	2'-6"	5'-6"	6'-6"	8'-0"	9'-6"	
	560	1'-0"	1'-0"	1'-0"	1'-0"	2'-6"	3'-0"	6'-0"	9'-0"		1'-0"	1'-0"	1'-6"	3'-6"	6'-6"	7'-0"	9'-0"	10'-0"	
16"	210	1'-0"	1'-0"	1'-0"	1'-0"	1'-0"	1'-0"	1'-6"	3'-6"	6'-0"	1'-0"	1'-0"	1'-0"	1'-0"	2'-6"	3'-6"	6'-6"	8'-0"	10'-6"
	230	1'-0"	1'-0"	1'-0"	1'-0"	1'-0"	1'-0"	2'-0"	4'-0"	6'-6"	1'-0"	1'-0"	1'-0"	1'-0"	3'-0"	3'-6"	7'-0"	9'-0"	11'-0"
	360	1'-0"	1'-0"	1'-0"	1'-0"	1'-0"	1'-0"	3'-0"	6'-0"	9'-0"	1'-0"	1'-0"	1'-0"	1'-0"	4'-0"	5'-0"	9'-0"	10'-0"	11'-6"
	560	1'-0"	1'-0"	1'-0"	1'-0"	1'-0"	1'-0"	3'-0"	6'-6"	10'-0"	1'-0"	1'-0"	1'-0"	1'-6"	5'-0"	6'-0"	10'-0"	11'-0"	12'-0"

Table B—Intermediate or Cantilever Support
Minimum distance from edge of hole to inside face of nearest intermediate or cantilever support

Depth	TJI®	Round Hole Size									Square or Rectangular Hole Size								
		2"	3"	4"	5"	6½"	7"	8⅞"	11"	13"	2"	3"	4"	5"	6½"	7"	8⅞"	11"	13"
9½"	110	1'-6"	2'-6"	3'-0"	4'-0"	7'-6"					1'-6"	2'-6"	3'-6"	5'-6"	6'-6"				
	210	2'-0"	2'-6"	3'-6"	4'-6"	7'-6"					2'-0"	3'-0"	4'-0"	6'-0"	7'-0"				
	230	2'-6"	3'-0"	4'-0"	5'-0"	8'-0"					2'-6"	3'-0"	4'-6"	6'-6"	7'-6"				
11⅞"	110	1'-0"	1'-0"	1'-6"	2'-6"	4'-0"	4'-0"	8'-0"			1'-0"	1'-6"	2'-6"	4'-0"	6'-6"	7'-0"	9'-0"		
	210	1'-0"	1'-0"	2'-0"	3'-0"	4'-6"	5'-0"	9'-0"			1'-0"	2'-0"	3'-0"	4'-6"	7'-6"	8'-0"	10'-0"		
	230	1'-0"	2'-0"	2'-6"	3'-6"	5'-0"	5'-6"	9'-6"			1'-0"	2'-6"	3'-6"	5'-0"	8'-0"	8'-6"	10'-0"		
	360	2'-0"	3'-0"	4'-0"	5'-6"	7'-0"	7'-6"	11'-0"			2'-0"	3'-6"	5'-0"	7'-0"	9'-6"	9'-6"	11'-0"		
	560	1'-6"	3'-0"	4'-6"	5'-6"	8'-0"	8'-6"	12'-0"			3'-0"	4'-6"	6'-0"	8'-0"	10'-6"	11'-0"	12'-0"		
14"	110	1'-0"	1'-0"	1'-0"	1'-0"	2'-0"	2'-6"	4'-6"	8'-0"		1'-0"	1'-0"	1'-0"	2'-6"	5'-0"	6'-0"	9'-0"	12'-0"	
	210	1'-0"	1'-0"	1'-0"	1'-0"	2'-6"	3'-0"	5'-0"	9'-0"		1'-0"	1'-0"	2'-0"	3'-6"	6'-0"	7'-0"	10'-0"	12'-6"	
	230	1'-0"	1'-0"	1'-0"	2'-0"	3'-0"	3'-6"	5'-6"	10'-0"		1'-0"	1'-0"	2'-6"	4'-0"	6'-0"	7'-6"	10'-6"	13'-0"	
	360	1'-0"	1'-0"	2'-0"	3'-6"	5'-6"	6'-0"	8'-6"	12'-6"		1'-0"	2'-0"	4'-0"	5'-6"	9'-0"	10'-0"	12'-0"	14'-0"	
	560	1'-0"	1'-0"	1'-6"	3'-6"	5'-6"	6'-6"	9'-6"	13'-6"		1'-0"	3'-0"	5'-0"	7'-0"	10'-0"	11'-0"	13'-6"	15'-0"	
16"	210	1'-0"	1'-0"	1'-0"	1'-0"	1'-0"	1'-0"	3'-0"	5'-6"	9'-6"	1'-0"	1'-0"	1'-0"	2'-0"	4'-6"	5'-6"	9'-6"	12'-6"	15'-6"
	230	1'-0"	1'-0"	1'-0"	1'-0"	1'-6"	2'-0"	4'-0"	6'-6"	10'-6"	1'-0"	1'-0"	1'-0"	2'-6"	5'-0"	6'-0"	10'-6"	13'-0"	16'-0"
	360	1'-0"	1'-0"	1'-0"	1'-0"	3'-0"	4'-0"	6'-6"	10'-0"	13'-6"	1'-0"	1'-0"	2'-0"	4'-0"	7'-6"	8'-6"	13'-0"	14'-6"	17'-0"
	560	1'-0"	1'-0"	1'-0"	1'-0"	2'-6"	3'-6"	7'-0"	11'-0"	15'-0"	1'-0"	1'-0"	3'-6"	5'-6"	9'-0"	10'-0"	14'-6"	16'-0"	18'-0"

▪ Rectangular holes based on measurement of longest side.

How to Use These Tables

1. Using **Table A, Table B,** or both if required, determine the hole shape/size and select the TJI® joist and depth.
2. Scan horizontally until you intersect the correct hole size column.
3. Measurement shown is minimum distance from edge of hole to support.
4. Maintain the required minimum distance from the end **and** the intermediate or cantilever support.

General Notes

- Holes may be located vertically anywhere within the web. Leave ⅛" of web (minimum) at top and bottom of hole.
- Knockouts are located in web at approximately 12" on-center; they do not affect hole placement.
- For simple span (5' minimum) uniformly loaded joists meeting the requirements of this guide, one maximum size round hole may be located at the center of the joist span **provided that no other holes occur in the joist.**
- Distances are based on the maximum uniform loads shown in this guide. For other load conditions or hole configurations, use Forte™ software or contact your iLevel representative.

DO NOT cut or notch flange.

DO NOT cut holes in cantilever reinforcement.

1 / SD3 — TYPICAL ALLOWABLE HOLE SIZES FOR I JOISTS
SCALE: 3/4" = 1'-0"

ASSEMBLY	A	B	C	D	E	F
SKETCH	0' - 2"; 0' - 2"; 0' - 1 3/4"	0' - 2"; 0' - 2"; 0' - 1 3/4"	0' - 2"; 0' - 2"; 0' - 1 3/4"; 0' - 3 1/2"	0' - 2"; 0' - 2"; 0' - 1 3/4"	0' - 2"; 0' - 2"; 0' - 1 3/4"; 0' - 1 3/4"; 0' - 3 1/2"	0' - 2"; 0' - 2"; 0' - 3 1/2"
FASTNER	SIMPSON - SDW22 x 3 5/8"	SIMPSON - SDW22 x 5"	SIMPSON - SDW22 x 5"	SIMPSON - SDW22 x 6 3/4"	SIMPSON - SDW22 x 6 3/4"	SIMPSON - SDW22 x 6 3/4"
SPACING	12" O.C.	12" O.C.	12" O.C.	12" O.C.	12" O.C.	12" O.C.
NOTE		INSTALL FASTNERS FROM BOTH SIDES STAGGER BY 3" FASTENERS FROM OPPOSITE SIDES		INSTALL FASTNERS FROM BOTH SIDES STAGGER BY 3" FASTENERS FROM OPPOSITE SIDES	INSTALL FASTNERS FROM BOTH SIDES STAGGER BY 3" FASTENERS FROM OPPOSITE SIDES	INSTALL FASTNERS FROM BOTH SIDES STAGGER BY 3" FASTENERS FROM OPPOSITE SIDES

NOTES:

1. CONTACT ENGINEER FOR ALTERNATE FASTENERS IF NEEDED.
2. NOTIFY ENGINEER IF POINT LOAD IS APPLIED ON LVL BEAMS. INSTALL MIN. 8 FASTENERS ON EITHER SIDE OF POINT LOAD WITH 2" SPACING.
3. MAINTAIN MINIMUM EDGE DISTANCE OF 6" FROM ENDS.

2A / SD3 — TYP. LVL PLY CONNECTION DETAIL
SCALE: 3/4" = 1'-0"

REVIEWED
By Michael Kyne at 2:23 pm, May 23, 2022

APPROVED
Montgomery County
Historic Preservation Commission

© COPYRIGHT 2016
Structural Engineering content of this drawings are property of structBIM LLC and are issued for this project only. Any re-use or re-production of these drawings shall not be done without written consent of structBIM LLC. These drawings are to be read in conjuction with project specifications and drawings from other consultants. These drawings shall not be used as shop drawings. Do not scale drawings, use dimensions as specified.

GTM ARCHITECTS

7735 OLD GEORGETOWN ROAD
SUITE 700
BETHESDA, MD 20814
(240)333-2000
(240)333-2001 FAX
WWW.GTMARCHITECTS.COM

GTM

Seal

STATE OF MARYLAND — KAUSHAL KANSARA — 40082 — PROFESSIONAL ENGINEER

Consultant

structBIM ENGINEERS
WE DESIGN....WE BIM
46400 BENEDICT DR, SUITE #211
PHONE: 703-657-4481
E-MAIL: info@structBIM.com

Project

19 HIGH STREET LOT 4
BROOKVILLE, MD

LOT 4

I certify that these documents were prepared or approved by me, and that I am a duly licensed Professional Engineer under the laws of the State of Maryland, license number 40082, Expiration Date: 02-13-2023.

N

Issue Description	*Date*

structBIM Project No.	22-0165
Checked By	KK
Drawn By	KK
Scale	3/4" = 1'-0"

Sheet Title
FRAMING DETAILS

Sheet No.
SD3

COPYRIGHT, 2016 structBIMEngineers, LLC.
PLOTTED ON: 4/15/2022 12:52:10 PM

FILE NAME:

STANDARDS AND CODES:

- DESIGN BUILDING CODE: INTERNATIONAL RESIDENTIAL CODE 2015 EDITION, STATE OR LOCAL JURISDICTION AMENDMENTS AND/OR ORDINANCES.
- IN ADDITION TO THE REQUIREMENTS INCLUDED IN THESE PROJECT, ALL CONSTRUCTION AND MATERIAL SHALL FURTHER CONFORM TO THE APPLICABLE PROVISIONS FROM LATEST EDITION OF FOLLOWING STANDARDS/CODES AS REQUIRED BY GOVERNING CODE OR LOCAL JURISDICTION.
- ACI (AMERICAN CONCRETE INSTITUTE)-318: BUILDING CODE REQUIREMENTS FOR STRUCTURAL CONCRETE..
- ACI-332: CODE REQUIREMENTS FOR RESIDENTIAL CONCRETE CONSTRUCTION
- ACI-530: BUILDING CODE REQUIREMENTS FOR MASONRY STRUCTURES
- AISC (AMERICAN INSTITUTE OF STEEL CONSTRUCTION): STEEL CONSTRUCTION MANUAL.
- NDS: NATIONAL DESIGN SPECIFICATIONS (NOS) FOR WOOD CONSTRUCTOIN WITH SUPPLEMENT.
- WFCM: WOOD FRAME CONSTRUCTION MANUAL FOR ONE- AND TWO- FAMILY DWELLINGS.
- AFPA: AMERICAN FOREST AND PAPER ASSOCIATOIN - SPAN TABLE FOR JOISTS AND RAFTERS.
- AISI S100: NORTH AMERICAN SPECIFICATION FOR THE DESIGN OF COLD FORMED STEEL STRUCTURAL MEMBERS.
- AISI S230: STANDARD FOR COLD-FORMED STEEL FRAMING-PRESCRIPTIVE METHOD FOR ONE- AND TWO-FAMILY DWELLINGS.
- AMERICAN INSTITUTE OF TIMBER CONSTRUCTION (AITC).
- AMERICAN NATIONAL STANDARDS INSTITUTE (ANSI).
- APA (AMERICAN PLYWOOD ASSOCIATION) E30: ENGINEERED WOOD CONSTRUCTION GUIDE
- ASCE - 5 (AMERICAN SOCIETY OF CIVIL ENGINEERS): BUILDING CODE REQUIREMENTS FOR MASONRY STRUCTURES.
- ASCE-6: SPECIFICATIONS FOR MASONRY STRUCTURES.
- ASCE-7: MINIMUM DESIGN LOADS FOR BUILDING AND OTHER STRUCTURES.
- AMERICAN WOOD COUNCIL (AWC).
- AMERICAN SOCIETY FOR TESTING AND MATERIALS (ASTM).
- AMERICAN WOOD PROTECTION ASSOCIATION (AWPA).
- AMERICAN WELDING SOCIETY (AWS).
- FEDERAL EMERGENCY MANAGEMENT AGENCY (FEMA).
- GYPSUM ASSOCIATION (GA).
- NATIONAL CONCRETE MASONRY ASSOCIATION (NCMA).
- SSPC: STEEL STRUCTURES PAINTING COUNCIL.
- TPI-I: NATOINAL DESIGN STANDARDS FOR METAL-PLATE-CONNECTED WOOD TRUSS CONSTRUCTION.

DESIGN LOADS:

DESCRIPTION	DEAD LOAD	LIVE LOAD	SNOW LOAD (b)
ROOF	17 PSF	-	30 PSF
FLOOR	15 PSF	40 PSF	-
ATTIC W/OUT STORAGE	10 PSF	10 PSF	-
ATTIC W/ LIMITED STORAGE	10 PSF	20 PSF	-
HABITABLE ATTICS & ATTICS W/ FIXED STAIR	10 PSF	30 PSF	-
SLEEPING ROOMS	10 PSF	30 PSF	-
BALCONIES & DECKS	10 PSF	40 PSF	-
STAIRS	10 PSF	40 PSF	-
GUARD RAILS & HAND RAILS	-	200 LBS (c)	-

WIND LOAD:

- WIND SPEED (ULTIMATE): 115 MPH
- WIND PRESSURE: 18 PSF (f)
- WIND EXPOSURE CATEGORY: B

FOUNDATION DESIGN LOADS:

- SOIL BEARING CAPACITY (g): 2000 PSF
- LATERAL EARTH PRESSURE: 60 PSF/FT

EARTHQUAKE LOADS:

- SEISMIC DESIGN CATEGORY: B
- SITE CLASS: B

NOTES:

a. REFER TO IRC TABLE R301.5 FOR MORE INFORMATION.
b. SNOW LOAD SPECIFIED IS GROUND SNOW LOAD ONLY.
c. A SINGLE CONCENTRATED LOAD APPLIED IN ANY DIRECTION AT ANY POINT ALONG THE TOP.
d. MECHANICAL EQUIPMENT LOADS IN EXCESS OF 200 LBS SHALL BE NOTIFIED TO STRUCTURAL ENGINEER.
e. PRE-FABRICATED STRUCTURAL COMPONENT SHALL COMPLY WITH DESIGN LOADS FROM APPLICABLE CODES/STANDARDS IN ADDITION TO LOADS SPECIFIED IN THESE NOTES.
f. WIND PRESSURE SPECIFIED IS FOR MAIN WIND FORCE RESISTING SYSTEM ONLY. WIND PRESSURE & LOADS FOR STRUCTURAL COMPONENTS AND CLADDING SHALL BE DETERMINED BY RESPECTIVE REGISTERED DESIGN PROFESSIONAL PER APPLICABLE STANDARDS/CODES.
g. SOIL BEARING CAPACITY IS ASSUMED UNLESS GEOTECHNICAL REPORT IS PROVIDED PER SITE WORK SECTION.

DEFLECTION CRITERIA:

DESCRIPTION	TOTAL LOAD	LIVE LOAD
ROOF TRUSSES/RAFTERS/CEILING JOISTS	L/240	L/360 OR 1/2" MAX.
FLOOR JOISTS/FLOOR TRUSSES	L/240	L/480 OR 1/2" MAX.
MEMBERS SUPPORTING BRICK/ HORIZONTAL MASONRY MEMBERS	L/600 OR 0.3" MAX.	
JOISTS/TRUSSES SUPPORTING CERAMIC TILE	L/720	

SITE WORK:

- GEOTECHNICAL REPORT WAS NOT PROVIDED AND FOUNDATION DESIGN IS BASED ON ASSUMED SOIL DESIGN CRITERIA AND SHALL BE FIELD VERIFIED.
- BOTTOM OF ALL EXTERIOR FOOTING SHALL BE MINIMUM FROST DEPTH OF 30 INCHES BELOW GRADE OR AS REQUIRED BY GOVERNING AUTHORITY OR CODE, AND SHALL PROJECT 12" IN TO UNDISTURBED VIRGIN SOIL OR ENGINEERED FILL.
- SOIL BEARING CAPACITY SHALL BE VERIFIED ON-SITE BY GEOTECHNICAL ENGINEER.
- ALL BEARING STRATA SHALL BE ADEQUATELY DRAINED PRIOR TO PLACING FOUNDATION CONCRETE.
- THE SIDES OF FOOTINGS MAY BE EARTH-FORMED IF THE EXCAVATION CAN BE KEPT VERTICAL CLEAN AND STABLE. OTHERWISE FORMS MUST BE USED.
- UNBRACED EXCAVATIONS SHALL BE SLOPED NO GRATER THAN 2:1.
- NO EXCAVATION SHALL BE CLOSER THAN ATLEAST A SLOPE OF 2:1 TO THE UNDERSIDE OF ANY EXISTING OR NEW FOOTING WITHOUT THE WRITTEN AND CERTIFIED PERMISSION FROM GEOTECHNICAL ENGINEER.
- STEP FOOTINGS SHALL BE PROVIDED WITH A RATIO OF 2:1.
- FOUNDATION ELEMENTS THAT ARE TO SUPPORT FILL ON BOTH SIDES SHALL BE BACKFILLED SIMULTANEOUSLY AND UNIFORMLY ON BOTH SIDES.
- FOUNDATION ELEMENTS THAT ARE TO SUPPORT FILL ON ONE SIDE ONLY SHALL BE PROPERLY BRACED BY PERMANENT STRUCTURAL ELEMENTS PRIOR TO BACKFILLING. PROVIDE TEMPORARY BRACING AS REQUIRED UNTIL PERMANENT BRACING IN PLACE AND FOUNDATION WALL ACHIEVES DESIRED STRENGTH.
- ENGINEERED FILLS HALL BE PLACED IN 8" MAXIMUM HEIGHT LOOSE LIFTS AND COMPACTED TO 95% OF MAXIMUM DRY DENSITY AT OPTIMUM MOISTURE CONTENT AS ESTABLISHED BY ASTM D-698.
- NO PORTION OF THE STRUCTURAL DRAWINGS SHALL BE USED AS SHOP DRAWINGS. CONTRACTOR IS RESPONSIBLE FOR FURNISHING SHOP DRAWINGS AND SHALL SUBMIT TO ENGINEER OF RECORD FOR REVIEW.
- PROVIDE SHORING AND PROTECTION FOR EXCAVATION BANKS AS NECESSARY TO AVOID CAVING
- PROVIDE 6 MIL POLYETHYLENE VAPOR VARIOUS UNDER SLAB ON GRADE OR AS RECOMMENDED BY GEOTECHNICAL ENGINEER.
- ALL RECOMMENDATIONS SPECIFIED IN GEOTECHNICAL REPORT SHALL BE FOLLOWED ALL THE TIME AND SHALL GOVERN.

GENERAL

- STRUCTURAL ENGINEERING DRAWINGS PREPARED IN THIS SET ARE BASED ON ARCHITECTURAL DRAWINGS AND PROVIDED INFORMATION AND SHALL BE READ IN CONJUNCTION WITH ARCHITECTURAL DRAWINGS.
- DETAILS, SECTIONS AND NOTES SHOWN ON THESE DRAWINGS ARE INTENDED TO BE TYPICAL AND SHALL BE APPLY TO SIMILAR CONDITIONS ELSEWHERE OTHERWISE SHOWN OR NOTED.
- THE STRUCTURAL INTEGRITY OF THE BUILDING IS DEPENDENT UPON COMPLETION OF WORK ACCORDING TO CONTRACT DRAWINGS AND SPECIFICATIONS. THE STRUCTURAL ENGINEER ASSUMES NO LIABILITY FOR THE STRUCTURE DURING CONSTRUCTION. THE METHODS OF CONSTRUCTION AND SEQUENCE OF OPERATIONS IS THE SOLE RESPONSIBILITY OF OWNER/CONTRACTOR.
- TEMPORARY BRACING AND SHORING SHALL BE RESPONSIBILITY OF CONTRACTOR AND SHALL BE DESIGNED BY SPECIALITY ENGINEER PER APPLICABLE CODES/STANDARDS TO ENSURE VERTICAL AND LATERAL STABILITY OF THE STRUCTURE OR PORTION THEREOF DURING THE CONSTRUCTION.
- THE CONTRACTOR SHALL BE RESPONSIBLE FOR PROVIDING NECESSARY UNDERPINNING OR BRACING FOR EXISTING STRUCTURE OR PORTION THEREOF. STRUCTURAL ENGINEER IS NOT RESPONSIBLE FOR ANY DESIGN OR PROVISIONS OF ANY TEMPORARY STRUCTURES.
- DO NOT CHANGE SIZE OR DIMENSIONS OF STRUCTURAL ELEMENTS WITHOUT WRITTEN PERMISSION FROM STRUCTURAL ENGINEER.
- DO NOT SCALE THE DRAWINGS, USE DIMENSIONS SHOWN. COORDINATE AND VERIFY ALL DIMENSIONS WITH ARCHITECTURAL DRAWINGS. ARCHITECTURAL DRAWINGS SUPERCEDES ALL DIMENSIONS SHOWN IN THESE DRAWINGS.
- GENERAL CONTRACTOR IS RESPONSIBLE TO PERFORM ALL NECESSARY TESTINGS PER GOVERNING ASTM STANDARDS FOR SOIL, CONCRETE OR ANY OTHER MATERIALS INVOLVED IN THE PROJECT AND SHOP DRAWINGS OF SUCH DESIGN OR REPORTS OF TESTING SHALL BE SUBMITTED TO ARCHITECT/ENGINEER FOR RECORD AND APPROVAL. ALL SUCH DESIGN OR TEST RESULTS SHALL BE SIGNED AND SEALED BY LICENSED PROFESSIONAL IN STATE OR JURISDICTION WHERE THE PROJECT IS LOCATED.

CAST-IN-PLACE CONCRETE:

- CONCRETE DESIGN AND DETAILING SHALL CONFORM TO THE REQUIREMENTS OF ACI 318 AND ACI 301, LATEST EDITIONS. CONTRACTOR SHALL SUBMIT MIX DESIGNS ACCOMPANIED BY APPROPRIATE GRAPHS AND BACKGROUND DATA FOR APPROVAL. MIX DESIGN SHALL INDICATE 7 AND 28 DAYS STRENGTHS, CEMENT CONTENT, AIR CONTENT, WATER-CEMENT RATIO, AMOUNT OF FINE AND COARSE AGGREGATES, AND ADMIXTURES.
- ALL REINFORCING STEEL SHALL BE DEFORMED BILLET STEEL CONFORMING TO ASTM A615 GRADE 60 AND DETAILED, FABRICATED AND PLACED CONFORMING TO MANUAL OF STANDARD PRACTICE FOR DETAILING CONCRETE STRUCTURES (ACI 315)
- ALL WELDED WIRE FABRIC SHALL CONFORM TO ASTM A185. ALL MESH EDGES SHALL LAP A MIN. OF 2 SQUARES.
- CONCRETE COMPRESSIVE STRENGTHS AT 28 DAYS SHALL BE 3000 psi FOR FOOTINGS, FOUNDATION WALLS AND SLAB ON GRADE IN ENCLOSED SPACES & 3500 psi FOR HORIZONTAL SURFACES EXPOSED TO WEATHER.
- SLUMP AT THE POINT OF DISCHARGE IN TO THE FORMS SHALL BE 4" +/- 1" FOR VERTICAL ELEMENTS AND 6" +/- 1" FOR HORIZONTAL ELEMENTS.
- CAST-IN-PLACE CONCRETE SHALL BE READY-MIX PER ASTM C94.
- ALL CONCRETE EXPOSED TO WEATHER SHALL HAVE A MIN. AIR ENTRAINMENT OF 6% +/- 1% PER ACI 318-08; SECTION: 4.4.1.
- PROVIDE CORNER BARS AT ALL WALL AND FOOTING INTERSECTIONS AND MATCH CONTINUING REINFORCEMENT.
- SEE ARCHITECTURAL DRAWINGS FOR NECESSARY CONCRETE FINISHES.
- RESTRICT ADDITION OF MIX WATER AT THE JOB SITE. DO NOT ADD WATER WITHOUT APPROVAL OF THE INSPECTIONS ENGINEER AND DO NOT EXCEED SLUMP LIMITATIONS.
- ALL GROUTS SHALL BE PRE-MIXED NON-SHRINKABLE, NON-METALLIC FORMULA PRO CONFORMING TO ASTMC827, AND SHALL HAVE A SPECIFIED COMPRESSIVE STRENGTH OF 3000 psi WITHIN 24 HOURS AND 6000 psi AT 28 DAYS. PRE-GROUTING OF BASE PLATES WILL NOT BE PERMITTED.
- PROVIDE KEYED JOINTS BETWEEN ALL NON-MONOLITHIC INTERSECTING CONCRETE ELEMENTS AND JOINTS.
- CONTRACTOR SHALL VERIFY EMBEDDED ITEMS, INCLUDING BUT NOT LIMITED TO ANCHOR BOLTS, BOLT CLUSTERS, WELD PLATES etc. BEFORE PLACING CONCRETE. NOTIFY ENGINEER OF ANY CONFLICTS WITH REBAR.
- CONCRETE EXPOSED TO WEATHER SHALL BE AIR ENTRAINED. TOTAL AIR CONTENT (BY PERCENT OF CONCRETE VOLUME) SHALL BE NOT LESS THAN 5% OR MORE THAN 7%.
- GENERAL CONTRACTOR IS RESPONSIBLE FOR SUBMITTING SHOP DRAWINGS SIGNED AND SEALED BY REGISTERED DESIGN PROFESSIONAL THAT INCLUDES: 1. CONCRETE MIX DESIGN 2. DETAILED REINFORCEMENT SHOP DRAWINGS PER ACI 318 AND ACI DETAILING MANUAL. 3. FORM WORK, SHORING, RE-SHORING OR UNDERPINNING SHOP DRAWINGS AS REQUIRED FOR PROJECT.

REINFORCING STEEL:

- REINFORCING BARS SHALL BE DEFORMED BILLET STEEL CONFORMING TO ASTM A615. REINFORCING BARS SHALL BE GRADE 60, UNLESS NOTED OTHERWISE.
- PLAIN BARS FOR SPIRAL REINFORCEMENT SHALL CONFORM TO ASTM A 615, GRADE 60.
- PLAIN STEEL WELDED WIRE REINFORCEMENT SHALL CONFORM TO ASTM A185.
- WELDED DEFORMED STEEL BAR MATS FOR CONCRETE REINFORCEMENT SHALL CONFORM TO ASTM A184.
- BARS SHALL BE BRANDED BY THE MANUFACTURER WITH BAR SIZE AND GRADE OF STEEL AND CERTIFIED MILL REPORTS SHALL BE SUBMITTED FOR RECORD.
- REINFORCING STEEL SHALL BE DETAILED IN ACCORDANCE WITH THE ACI "MANUAL OF STANDARD PRACTICE FOR DETAILING REINFORCED CONCRETE STRUCTURES", LATEST EDITION.
- PROVIDE MINIMUM CLEAR CONCRETE COVER (a) FOR REINFORCEMENT AS SPECIFIED BELOW UNLESS SPECIFICALLY NOTED OTHERWISE ON THE PLANS:

DESCRIPTION			MIN. COVER (IN.)
CONCRETE CAST AGAINST AND PERMENANTLY EXPOSED TO EARTH			3"
CONCRETE EXPOSED TO EARTH OR WEATHER	#6 THROUGH #18 BARS		2"
	#5 BAR, W31 OR D31 WIRE AND SMALLER		1 1/2"
CONCRETE NOT EXPOSED TO EARTH OR WEATHER	SLAB, WALLS, JOISTS		3/4"
	BEAMS, COLUMNS (PRIMARY REINF., TIES, STIRRUPS, SPIRALS.		1 1/2"
	SHELLS, FOLDED PLATES	#6 BARS AND LARGER	3/4"
		#5 BAR, W31 OR D31 WIRE, AND SMALLER	1/2"

MASONRY:

- CONCRETE BLOCKS USED IN WALLS SHALL CONFORM TO ASTM C90. BRICK SHALL CONFORM TO ASTM C62 AND ASTM C216, AS APPLICABLE. MORTAR FOR BRICK VENEER AND OTHER MASONRY SHALL CONFORM TO ASTM C270, TYPE N. TYPE S MORTAR SHALL BE USED TYPICAL FOR ALL MASONRY, AND TYPE M MORTAR SHALL BE USED FOR BELOW GRADE MASONRY AND/OR MASONRY IN CONTACT WITH SOIL, U.N.O.
- HOLLOW LOAD BEARING UNITS SHALL CONFORM TO ASTM C90, NORMAL WEIGHT TYPE II WITH A MIN. NET COMPRESSIVE UNIT STRENGTH OF 1900 psi. (NET AREA COMPRESSIVE MASONRY STRENGTH fm' = 1500 psi)
- REINFORCED MASONRY WALLS SHALL BE BUILT SUCH THAT CELLS LINE UP VERTICALLY.
- FILLED CELLS SHALL BE FILLED WITH COARSE GROUT. COARSE GROUT SHALL CONFORM TO ASTM C476. PROPERTIES SHALL INCLUDE: 2500 psi AT 28 DAYS, 3/8" MAXIMUM AGGREGATE AND 8"-11" SLUMP. FILLED CELLS MAY ALTERNATIVELY BE FILLED WITH A 3000 psi PEA GRAVEL MIX CONCRETE. TEH PEA GRAVEL MIX SHALL BE PROPORTIONED WITH A MAXIMUM AGGREGATE SIZE OF 3/8" DIAMETER TO PROVIDE A MIN. OF 1/2" CLEARANCE, ADDITIONALLY, THE PEA GRAVEL MIX SHALL PROVIDE AN 8" TO 11" SLUMP.
- A CONTINUOUS REINFORCED CMU/CONCRETE BOND BEAM SHALL BE PROVIDED ON TOP OF EACH WALL. BOND BEAMS SHALL BE MIN. 8"x8" WITH CONTINUOUS (2) #4 REBARS.
- WHERE EXPANSION OR ANY OTHER ANCHORS ARE SHOWN, MASONRY CELLS SHALL BE FULLY GROUTED AT MINIMUM OF 8" ABOVE AND BELOW EACH EXPANSION ANCHOR OR ANY OTHER ANCHORS UNLESS NOTED OTHERWISE.
- UNLESS NOTED OTHERWISE ON PLANS, PROVIDE A MIN. OF (2) FULLY GROUTED COURSES BY 32" LENGTH AT ALL STRUCTURAL STEEL BEARING.
- VERTICAL REINFORCING BARS SHALL BE HELD IN POSITION WITH BAR POSITIONERS @ 8'-0" O.C., AT TOP AND BOTTOM OF BAR WITH MIN. CLEARANCE OF 1/2" FROM MASONRY. THE CLEAR DISTANCE BETWEEN BARS SHALL NOT BE LESS THAN ONE BAR DIAMETER NOR LESS THAN 1". CENTER BARS IN WALLS UNLESS NOTED OTHERWISE.
- REINFORCING BARS SHALL BE STRAIGHT EXCEPT FOR BENDS AROUND CORNERS.
- MIN. LAP SPLICE SHALL BE 36 BAR DIAMETERS. WIRE TIE LAP SPLICES.
- WHEN A FOUNDATION DOWEL DOESN'T LINE UP WITH A VERTICAL CORE. IT SHALL NOT BE SLOPED MORE THAN 1:6. DOWELS SHALL BE GROUTED IN TO A CORE IN VERTICAL ALIGNMENT, EVEN IF IT IS IN A CELL ADJACENT TO VERTICAL WALL REINFORCEMENT.
- HORIZONTAL WALL REINFORCING SHALL BE ZINC COATED COLD DRAWN TRUSS TYPE DUR-O-WALL (OR EQUIVALENT) CONFORMING TO ASTM A82 SPACED AT 16' O.C. MAX. HORIZONTAL JOINT REINFORCING SHALL CONSIST OF (2) 9 GA OR LARGER HORIZONTAL BARS WELD CONNECTED WITH 12 GA OR LARGER CROSS-WIRES. ZINC COATING CONFORM TO ASTM A116-73. LAP SPLICE JOINT REINFORCEMENT 12-INCHES MIN.
- PROVIDE HORIZONTAL JOINT REINFORCEMENT AT MASONRY OPENINGS SUCH AS DOORS AND WINDOWS. CONTINUE JOINT REINFORCING FOR THE FIRST AND SECOND BLOCK COURSE ABOVE AND BELOW MASONRY OPENING. EXTEND JOINT REINFORCING A MIN. OF TWO FEET BEYOND OPENINGS.
- CLEANOUTS SHALL BE PROVIDED IN THE BOTTOM COURSE OF MASNORY IN EACH GROUT POUR WHEN THE POUR HEIGHT EXCEEDS 5'. CLEANOUTS SHALL BE SAW-CUT 4" x 4".
- GROUT POUR HEIGHT SHALL NOT EXCEED 24'. PLACE GROUT IN 5' MAX. LIFTS HEIGHTS.
- CONSOLIDATE GROUT POURS AT THE TIME OF PLACEMENT BY MECHANICAL MEANS AND RECONSOLIDATE AFTER INITIAL WATER LOSS AND SETTLEMENT.
- STORE BLOCKS ON PALLETS AND COVER WITH VISQUEEN.
- PLACE ALL MASONRY IN RUNNING BOND WITH 3/8" MORTAR JOINTS. PROVIDE COMPLETE COVERAGE FACE SHELL MORTAR BEDDING HORIZONTAL AND VERTICALL FULLY MORTAR WEBS IN ALL COURSES OF PIERS, COLUMNS, AND PILASTERS AND ADJACENT TO GROUT CELLS.
- MASONRY CONTROL JOINTS SHALL BE INSTALLED AT LOCATIONS INDICATED ON DRAWINGS. ADDITIONALLY INSTALL MASONRY CONTROL JOINTS SPACE AT 26'-0" O.C.

STRUCTURAL STEEL:

- STRUCTURAL STEEL SHALL CONFORM TO THE LATEST EDITION OF THE AISC "SPECIFICATION FOR THE DESIGN, FABRICATION AND ERECTION OF STRUCTURAL STEEL FOR BUILDINGS".
- ALL W SHAPE STEEL SHALL CONFORM TO ASTM 992 (Fy = 50 KSI).
- ALL HOLLOW STRUCTURAL SECTIONS (HSS) SHALL CONFORM TO ASTM A500, GRADE B.
- ALL OTHER STRUCTURAL STEEL SHALL CONFORM TO ASTM A36 (Fy = 36 KSI).
- ALL ANCHOR BOLTS SHALL CONFORM TO ASTM A307 U.N.O.
- ALL HIGH STRENGTH BOLTS SHALL CONFORM TO ASTM A325 U.N.O.
- BOLTED CONNECTIONS SHALL USE HIGH STRENGTH BOLTS.
- BOLTS IN MOMENT FRAMES SHALL USE HIGH STRENGTH SLIP CRITICAL BOLTS. SLIP CRITICAL CONNECTIONS SHALL HAVE CONTACT SURFACES MEETING CLASS A SURFACE CONDITIONS.
- WELDED CONNECTIONS SHALL CONFORM TO THE LATEST EDITION OF AMERICAN WELDING SOCIETY CODE, AWS D11.
- ALL WELDED CONNECTIONS SHALL USE E70XX, LOW HIDROGEN ELECTRODES U.N.O. ELECTRODES SHALL BE PROTECTED FROM MOISTURE.
- BOLTED CONNECTIONS SHALL CONFORM TO THE REQUIREMENTS OF "SPECIFICATIONS FOR STRUCTURAL JOINTS USING ASTM A325 OR A490 BOLTS" AS APPROVED BY RESEARCH COUNCIL ON STRUCTURAL CONNECTIONS (RCSC). USE BEARING TYPE BOLTS WITH THREAD ALLOWED ACROSS THE SHEAR PLANE.
- ALL STEEL CONNECTIONS SHALL BE WELDED AROUND WITH 1/4" FILLET WELD UNLESS OTHERWISE NOTED, EXCEPT FOR SLOTTED CONNECTIONS.
- EXPANSION BOLTS SHALL BE GALVANIZED CARBON STEEL COMPONENTS, ZINC-PLATED TO COMPLY WITH ASTM B 633 AND FF-S 325, GROUP II, TYPE 4, CLASS I.
- FULL PENETRATION WELDS SHALL BE MADE AGAINST A 1/8" x 1" BACKER PLATE TACK WELDED IN PLACE BELOW THE WELD. PENETRATION WELDS SHALL BE EQUIVALENT IN DEPTH AND LENGTH TO THE PARTS JOINED.
- SUBMIT ALL STRUCTURAL STEEL/LIGHT GAGE SHOP DRAWINGS SIGNED AND SEALED BY A REGISTERED PROFESSIONAL ENGINEER. SHOP DRAWINGS SHALL INCLUDE MEMBER SIZES, MATERIAL SPECIFICATION, CONNECTIONS AND/OR ANY OTHER ITEMS REQUIRED BY GOVERNING BUILDING CODE OR JURISDICTION.
- NO FABRICATION SHALL BE STARTED PRIOR TO SHOP DRAWINGS APPROVAL.

STRUCTURAL LUMBER:

- WOOD CONSTRUCTION, INCLUDING LUMBER, CONNECTIONS, AND DETAILS SHALL COMPLY WITH THE REQUIREMENTS OF AMERICAN INSTITUTE OF TIMBER CONSTRUCTION AND THE NATIONAL FOREST AND PAPER ASSOCIATION'S CURRENT "NATIONAL DESIGN SPECIFICATION FOR WOOD CONSTRUCTION".
- ALL STRUCTURAL WOOD MEMBERS SHALL COMPLY WITH FOLLOWING MINIMUM DESIGN VALUES:

SPECIES		Fb	Ft (a)	Fv (a)	Fc⊥ (a)	Fc II (b)	E	Emin
HEMFIR #2		850 psi	525 psi	150 psi	405 psi	1300 psi	1300000 psi	470000 psi
SPF #2		875 psi	450 psi	135 psi	425 psi	1150 psi	1400000 psi	510000 psi
THICKNESS	WIDTH	SOUTHERN PINE #2						
2" TO 4"	2" TO 4"	1100 psi	675 psi	175 psi	565 psi	1450 psi	1400000 psi	510000 psi
	5" TO 6"	1000 psi	600 psi	175 psi	565 psi	1400 psi	1400000 psi	510000 psi
	8"	925 psi	550 psi	175 psi	565 psi	1350 psi	1400000 psi	510000 psi
	10"	800 psi	475 psi	175 psi	565 psi	1300 psi	1400000 psi	510000 psi
	12"	750 psi	450 psi	175 psi	565 psi	1250 psi	1400000 psi	510000 psi
MICROLAM LVL (ML)		2600 psi	1555 psi	285 psi	750 psi	2510 psi	1900000 psi	965710 psi
PARALLAM PSL 1.8E		2400 psi	1755 psi	190 psi	425 psi	2500 psi	1800000 psi	914880 psi
PARALLAM PSL 2.0E		2900 psi	2025 psi	290 psi	750 psi	2900 psi	2000000psi	1016535 psi
TIMBERSTRAND LSL1.3E		1900 psi	1075 psi	400 psi	680 psi	1400 psi	1300000psi	660750 psi
TIMBERSTRAND LSL1.55E		2325 psi	1070 psi	310 psi	800 psi	2050 psi	1550000psi	787815 psi

- ALL EXTERIOR WOOD MEMBERS EXPOSED TO WEATHER SHALL BE PRESSURE TREATED PER APPLICABLE CODES/STANDARDS.
- ALL FASTENERS/HARDWARE EXPOSED TO WEATHER OR IN CONTACT WITH TREATED WOOD SHALL BE HOT DIP GALVANIZED OR STAINLESS STEEL OR Z-MAX COATED OR APPROVED FOR SUCH USE BY MANUFACTURER.
- PREVENT DIRECT CONTACT OF INTERIOR WOOD WITH CONCRETE OR MASONRY. PROTECT ALL WOOD FROM MOISTURE BY APPLYING APPROVED WRAP AND AVOID DIRECT CONTACT WITH MASONRY OR CONCRETE.
- CONTRACTOR SHALL SUBMIT SHOP DRAWINGS FOR ENGINEER'S REVIEW AND APPROVAL PRIOR TO ORDERING JOISTS FOR CONSTRUCTION.
- FLOOR & ROOF FRAMING/DIRECTION SHOWN ON THE DRAWINGS ARE SCHEMATIC AND FOR REFERENCE ONLY AND SHALL NOT BE CONSIDERED AS SHOP DRAWINGS. SHOP DRAWINGS FROM MANUFACTRER SHALL BE FOLLOWED FOR JOIST/TRUSS PLACEMENTS.
- ALL MECHANICAL, PLUMBING ELECTRICAL OR ANY OTHER COMPONENTS FROM OTHER DISCIPLINES SHALL BE COORDINATED BY MANUFACTURER IN SHOP DRAWINGS AS WELL AS ON THE FIELD. NOTIFY ARCHITECT/STRUCTURAL ENGINEER IF ANY DESCRIPANCY OR CONFLICT FOUND.
- ALL STRUCTURAL FRAMING MEMBERS SUPPORTING FLOOR JOISTS/TRUSSES ARE DESIGNED BASED ON LAYOUT REPRESENTED ON DRAWINGS. ANY MODIFICATION, CHANGE OR ADDITION SHALL NOT BE DONE WITHOUT PRIOR APPROVAL BY ARCHITECT/ENGINEER. SHOP DRAWINGS SHALL BE SUBMITTED FOR REVIEW FOR ANY SUCH CHANGE.
- ROOF/FLOOR TRUSS MANUFACTURER SHALL PROVIDE NECESSARY BRACING TO WEB MEMBERS AS REQUIRED BY GOVERNING CODE/STANDARD.
- ALL ROOF SHEATHING SHALL BE APA RATED 7/16" C-C, C-D OR STRUCTURAL II WITH SPAN RATING OF 48/24 PER "AMERICAN PLYWOOD ASSOCIATION". PROVIDE MIN. NAILING PATTERN W/ 8d COMMON NAILS @ 6" O.C. ON EDGES AND 12" O.C. IN FIELD. PROVIDE PLYWOOD CLIPS AT PLYWOOD EDGES BETWEEN EACH FRAMING MEMBER.
- ALL FLOOR SHEATHING SHALL BE 3/4" THICK T&G APA RATED AND WITH SPAN RATING OF 48/24 OR STURD-I-FLOOR 24" O.C. RATED PLYWOOD SHALL BE GLUED AND NAILED. INSTALL 100% GLUE LINE AND MIN. NAILING PATTERN OF 10d COMMON NAILS @ 6" O.C. ON EDGE SUPPORTS AND 12" O.C. INTERMEDIATE SUPPORTS.
- ALL EXTERIR STUD WALL SHEATHING SHALL BE MIN. 7/16" APA RATED NAILED WITH 8d NAILS @ 6" O.C. ON EDGES AND 12" O.C. IN FIELD U.N.O. REFER TO SHEAR WALL SCHEDULE FOR MORE INFORMATION.
- ALL WOOD PLATE SPLICES SHALL BE STAGGERED AT 4'-0" MIN.
- PROVIDE MIN. (2) 2x12 UP TO 4'-0" SPAN, (2) ML10 FOR 4'-0" TO 6'-0" SPAN, (2) ML12 FOR 6'-0" TO 9'-0" SPAN WHERE HEADER/LINTEL/BEAM SIZES ARE NOT SPECIFIED ON PLANS. ANY SPANS LARGER THAN 9'-0" SUPPORITNG FRAMING MEMBERS (POSTS/BEAMS/BEARING WALLS) AND NOT SPECIFIED ON PLANS SHALL BE NOTIFIED TO ENGINEER IMMEDIATELY.
- PROVIDE MIN. DOUBLE JOISTS OR SPECIAL FLOOR TRUSS UNDER (2) 2x POSTS AND (2) PLY MICROLAM LVL OR SPECIAL FLOOR TRUSS TO MATCH FLOOR THICKNESS UNDER (3) 2x POSTS UNLESS NOTED OTHERWISE ON THE PLAN. CONTRACTOR SHALL NOTIFY ENGINEER FOR SUPPORTING STRUCTURAL MEMBER FOR ALL OTHER POST SIZES COMING FROM ABOVE.
- PROVIDE MIN. (3) 2x POSTS UNDER ALL BEAMS/GIRDER TRUSSES/HEADERS U.N.O. ON PLANS.
- PROVIDE SOLID BLOCKING WITHIN FLOOR SYSTEM FOR POSTS/JACKSTUDS COMING FROM ABOVE.
- ALL POSTS/JACKS SHALL CONTINUE DOWN TO FOUNDATION/STRUCTURAL MEMBERS SUCH AS BEAMS/GIRDERS/GIRDER TRUSSES. NOTIFY ENGINEER IF ANY DESCRIPANCY FOUND DURING CONSTRUCTION.
- PROVIDE DOUBLE JOISTS OR SPECIAL TRUSS UNDER ALL WALLS/PARTITIONS EXTEND 1/2 OR MORE OF FRAMING SPAN.
- PROVIDE BLOCKING BETWEEN TOP FLANGE/CHORD OF JOISTS/FLOOR TRUSS SUPPORTING PARTITION WALL FROM ABOVE.
- PROVIDE FULL HEIGHT BLOCKING BETWEEN FLOOR JOISTS/TRUSSES SUPPORTING BEARING WALL FROM ABOVE.
- ALL DIMENSION LUMBER SHALL BE DRESSED S4S AND SHALL BEAR GRADE STAMP OF THE MANUFACTURER'S ASSOCIATION.
- ALL LUMBER SHALL BE SEASONED AND FREE FROM WRAP.
- PROVIDE SOLID BLOCKING BETWEEN JOISTS AND RAFTERS AT ALL BEARING POINTS AND AT MIN. OF 8'-0" O.C.
- PROVIDE STRONG BACKS AT MIN. OF 10'-0" O.C. AT ALL FLOOR TRUSSES.
- PROVIDE CONTINUOUS RIM BOARD AT PERIMETER AND AT END BEARING WALLS WHEN I-JOISTS ARE USED FOR FLOOR FRAMING.
- PROVIDE MIN. 1 3/4" BEARING AT END AND 3 1/2" MIN. BEARING AT INTERMEDIATE SUPPORT WHEN I-JOISTS ARE USED FOR FLOOR FRAMING.
- PROVIDE WEB-STIFFENERS, SQUASH BLOCKS, BEARING BLOCKS, BLOCKING PANELS, FILLER BLOCKS, BACKER BLOCKS AS RECOMMENDED BY MANUFACTURER. REFER TO MANUFACTURER'S GUIDELINES FOR INSTALLATION AND FASTENING.
- PRE-ENGINEERED/PRE-FABRICATED WOOD ROOF/FLOOR TRUSSES SHALL BE IN ACCORDANCE WITH "DESIGN SPECIFICATIONS FOR METAL PLATE CONNECTED WOOD TRUSSES " BY "TRUSS PLATE IINSTUTE (TPI - I)"
- PROVIDE HURRICANE CLIPS TO RESIST UPLIFT AS SHOWN ON SHOP DRAWINGS. PROVIDE SIMPSON "H2.5" HURRICANE CLIP MIN.
- REFER & FOLLOW "BCSI" GUIDES B1 THRU B11 FOR HANDLING, INSTALLING, RESTRAINING AND BRACING OF METAL PLATE CONNECTED WOOD TRUSSES.
- INSTALLATION OF PRE-ENGINEERED/PRE-FABRICATED ROOF AND/OR FLOOR TRUSSES SHALL BE DONE PER TRUSS DESIGN DRAWINGS AND TRUSS ENGINEER SHALL BE RESPONSIBLE FOR PROVIDING ANY REPAIRS OR ALTERATIONS IN TRUSS CONFIGURATIONS.

EXISTING CONDITIONS:

- ALL EXISTING STRUCTURAL MEMBERS TO REMAIN INTACT UNLESS SPECIFICALLY NOTED TO BE REMOVED BY MOST RECENT DEMOLITION DOCUMENTS BY ARCHITECT OR OTHERWISE NOTED ON THESE DRAWINGS.
- ALL INFORMATION ON THESE DRAWINGS RELATED TO EXISTING CONDITIONS ARE PROVIDED BASED ON AVAILABLE CONTRACT DRAWINGS OR INFORMATION PER ARCHITECTURAL DRAWINGS. CONTRACTOR IS RESPONSIBLE FOR FIELD VERIFYING ALL EXISTING CONDITIONS AND NOTIFY STRUCTURAL ENGINEER IF ANY DISCREPANCY IS FOUND BETWEEN CONTRACT DRAWINGS AND EXISTING CONDITIONS.
- THE PORTION OF THE STRUCTURE THAT IS SHOWN TO BE STRUCTURALLY MODIFIED HAVE BEEN DESIGNED ACCORDING TO BEST ENGINEERING PRACTICE. HOWEVER WE DO NOT ASSUME RESPONSIBILITY FOR ANY DAMAGE THAT MAY ARISE FOR ANY PORTION OF THE BUILDING NOT REDESIGNED, ALTERED OR CONSTRUCTED UNDER THIS SET OF DESIGN DRAWINGS. WE DO NOT ASSUME ANY RESPONSIBILITY OR LIABILITY TOWARDS DEFICIENCIES IN THE CONDITION OF THE BUILDING PRIOR TO RENOVATION PER NEW CONTRACT DRAWINGS.
- CONTRACTOR SHALL FIELD VERIFY ALL DIMENSIONS PRIOR TO COMMENCEMENT OF ANY WORK.

WOOD FASTENERS/CONNECTORS:

- FASTENERS USED BELOW GRADE TO ATTACH PLYWOOD TO EXTERIOR WALLS OR CRAWL SPACE STUD WALLS OR KNEE WALL CONSTRUCTION OVER FOUNDATION SHALL BE TYPE 304 OR 316 STAINLESS STEEL.
- ALL MECHANICAL WOOD CONNECTORS SHALL BE CLEARLY SPECIFIED ON SHOP DRAWINGS SUPPLIED BY MANUFACTURER AND SHALL BE DESIGNED FOR APPROPRIATE LOAD AS REQUIRED BY GOVERNING CODE/JURISDICTION.
- ALL MECHANICAL CONNECTORS AND/OR FASTENERS INCLUDING NAILS/BOLTS/SCREWS EXPOSED TO CONCRETE/MASONRY/WEATHER SHALL BE HOT DIP GALVANIZED OR STAINLESS STEEL OR APPROVED BY MANUFACTURER FOR SUCH USE.
- BOLT HOLES SHALL BE A MIN. OF 1/32" TO A MAX. OF 1/16" LARGER THAN THE BOLT DIAMETER.
- A METAL PLATE OR WASHER NOT LESS THAN A STANDARD OVERSIZED CUT WASHER SHALL BE BETWEEN THE WOOD AND THE BOLT HEAD AND BETWEEN THE WOOD AND THE NUT.
- SNUG TIGHT ALL BOLTS. TIGHTEN CONNECTIONS WHICH HAVE LOOSENED DUE TO WOOD SHRINKAGE.
- INSTALL BOLTS TO EXCLUDE THREADED PORTIONS OF BOLTS FROM SHEAR PLANES.
- LAG SCREWS SHALL BE INSTALLED IN PRE-DILLED HOLES.
- THE CLEARANCE HOLE FOR THE SHANK SHALL HAVE THE SAME DIAMETER AS THE SHANK AND THE SAME DEPTH OF PENETRATION AS THE LENGTH OF THE SHANK.
- THE LEAD HOLE FOR THE THREADED PORTION SHALL HAVE A DIAMETER EQUAL TO 75% FOR SOUTHERN PINE, 70% FOR OTHER SPECIES OF THE SHANK DIAMETER AND A MIN. LENGTH EQUAL TO LENGTH OF THREADED PORTION.
- WOOD SILL PLATE SHALL BE ANCHORED TO CONCRETE/MASONRY W/ 1/2" DIA. ANCHOR BOLTS WITH MIN. 7" EMBEDMENT AND 6'-0" O.C. AND 12" MAX. FROM PLATE ENDS OR SPLICES. REFER TO MANUFACTURER'S RECOMMENDATIONS FOR ALTERNATE ANCHORS. REFER TO SHEAR WALL SCHEDULE FOR ADDITIONAL ANCHORAGE REQUIREMENTS. PROVIDE MIN. 3"x3" WASHERS TO ANCHOR BOLTS WITH ENGINEERED SHEAR WALLS (SW) ARE SPECIFIED ON DRAWINGS.
- REFER TO FASTENING SCHEDULE FOR MORE INFORMATION.

NOTES ON FASTENER SCHEDULE (IRC 2015 - TABLE R602.3(1)):

a. ALL NAILS ARE SMOOTH-COMMON, BOX OR DEFORMED SHANKS EXCEPT WHERE OTHERWISE STATED. NAILS USED FOR FRAMING AND SHEATHING CONNECTIONS SHALL HAVE MIN. AVERAGE BENDING YIELD STRENGTHS AS SHOWN 80 ksi FOR SHANK DIAMETER OF 0.192 INCHES, 90 ksi FOR SHANK DIAMETERS LARGER THAN 0.142 INCHES BUT NOT LARGER THAN 0.177 INCHES AND 100 ksi FOR SHANK DIAMETERS OF 0.142 INCHES OR LESS
b. STAPLES ARE 16 GAGE WIRE AND HAVE A MINIMUM 7/16 INCH ON DIAMETER CROWN WIDTH
c. NAILS SHALL BE SPACED AT NOT MORE THAN 6" O.C. AT ALL SUPPORTS WHERE SPANS ARE 48" OR GREATER
d. 4'-0" x 8'-0" OR 4'-0" x 9'-0" PANELS SHALL BE APPLIED VERTICALLY.
e. SPACING OF FASTENERS NOT INCLUDED IN THIS TABLE SHALL BE BASED ON TABLE R602.3(2) OF IRC 2015.
f. FOR REGIONS HAVING BASIC WIND SPEED OF 110 MPH OR GREATER 8d DEFORMED (2 1/2" x 0.120) NAILS SHALL BE USED FOR ATTACHING PLYWOOD AND WOOD STRUCTURAL PANEL ROOF SHEATHING TO FRAMING WITHIN MIN. 48" DISTANCE FROM GABLE END WALLS, IF MEAN ROOF HEIGHT IS MORE THAN 25'-0" UP TO 35'-0" MAXIMUM.
g. FOR REGIONS HAVING BASIC WIND SPEED OF 100 MPH OR LESS, NAILS FOR ATTACHING WOOD STRUCTURAL PANEL ROOF SHEATHING TO GABLE END WALL FRAMING SHALL BE SPACED 6" O.C. WHEN BASIC WIND SPEED IS GREATER THAN 100 MPH, NAILS FOR ATTACHING PANEL ROOF SHEATHING TO INTERMEDIATE SUPPORTS SHALL BE SPACED 6" O.C. FOR MIN. 48" DISTANCE FROM RIDGES, EAVES AND GABLE END WALLS; AND 4" O.C. TO GABLE END WALL FRAMING.
h. GYPSUM SHEATHING SHALL CONFORM TO ASTM C 1396 AND SHALL BE INSTALLED IN ACCORDANCE WITH GA 253. FIBERBOARD SHEATHING SHALL CONFORM TO ASTM C 208.
i. SPACING OF FASTENERS ON FLOOR SHEATHING PANEL EDGES APPLIES TO PANEL EDGES SUPPORTED BY FRAMING MEMBERS AND REQUIRED BLOCKING AND AT ALL FLOOR PERIMETERS ONLY. SPACING OF FASTENERS ON ROOF SHEATHING PANEL EDGES APPLIES TO PANEL EDGES SUPPORTED BY FRAMING MEMBERS AND REQUIRED BLOCKING. BLOCKING OF ROOF OR FLOOR SHEATHING PANEL EDGES PERPENDICULAR TO THE FRAMING MEMBERS NEED NOT BE PROVIDED EXCEPT AS REQUIRED BY OTHER PROVISIONS OF THE CODE. FLOOR PERIMETER SHALL BE SUPPORTED BY FRAMING MEMBERS OR SOLID BLOCKING.

ABBREVIATIONS:

ARCH= ARCHITECTURAL
B.E.W= BOTTOM EACH WAY
BM= BEAM
BRG= BEARING
COL= COLUMN
CONC.= CONCRETE
CONT= CONTINUOUS
DBL= DOUBLE
EA= EACH
E.E.= EACH END
EXP= EXPANSION
EXT.= EXTERIOR
FDN= FOUNDATION
FTG= FOOTING
G.T.= GIRDER TRUSS
HDR= HEADER
INT.= INTERIOR
INFO INFORMATION
J= JACK STUD
MANUF= MANUFACTURER
MIN= MINIMUM
MAX= MAXIMUM
ML= MICROLAM
N.T.S= NOT TO SCALE
O.C.= ON CENTER
PLYWD= PLYWOOD
P.T.= PRESSURE TREATED
P.A. = POST FROM ABOVE
REQD= REQUIRED
S= KING STUD
SPF= SPRUCE PINE FIR
SP= SOUTHERN PINE
STL= STEEL
TYP= TYPICAL
W/= WITH
WD= WOOD
WWF= WELDED WIRE FABRIC
U.N.O.= UNLESS NOTED OTHERWISE

NO.	DESCRIPTION OF BUILDING ELEMENT	FASTNERS
1	BLOCKING BETWEEN JOISTS OR RAFTERS TO TOP PLATE (TOE NAIL)	(3) 8d (2 1/2" x 0.113")
2	CEILING JOISTS TO PLATE (TOE NAIL)	(3) 8d (2 1/2" x 0.113")
3	CEILING JOISTS NOT ATTACHED TO PARALLEL RAFTER, LAPS OVER PARTIAIONS (FACE NAIL)	(3) 10d
4	COLLAR TIE RAFTER (FACE NAIL) OR 1 1/4" x 20 GAGE RIDGE STRAP	(3) 10d (3" x 0.128")
5	RAFTER TO PLATE (TOE NAIL)	(2) 16d (3 1/2" x 0.135")
6	ROOF RAFTERS TO RIDGE, VALLEY OR HIP RAFTERS TOE NAILS FACE NAILS	(4) 16d (3 1/2" x 0.135") (3) 16d (3 1/2" x 0.135")
7	BUILT-UP CORNER STUDS	10d (3" x 0.128") @ 24" O.C.
8	BUILT-UP HEADER, TWO PIECES W/ 1/2" SPACER	16d (3 1/2" x 0.135") @ 16" O.C. ALONG EACH EDGE
9	CONTINUED HEADER, TWO PIECES	16d (3 1/2" x 0.135") @ 16" O.C. ALONG EACH EDGE
10	CONTINUOUS HEADER TO STUD (TOE NAIL)	(4) 8d (2 1/2" x 0.113")
11	DOUBLE STUDS (FACE NAILS)	10d (3" x 0.128") @ 24" O.C.
12	DOUBLE TOP PLATES (FACE NAILS)	10d (3" x 0.128") @ 24" O.C.
13	DOUBLE TOP PLATES, MIN. 48" OFFSET OF END JOINSTS (FACE NAILS IN LAPPED AREA)	(8) 16d (3 1/2" x 0.135")
14	SOLE PLATE TO JOIST OR BLOCKING (FACE NAIL)	16d (3 1/2" x 0.135") @ 16" O.C.
15	SOLE PLATE TO JOIST OR BLOCKING (FACE NAIL) AT BRACED WALL PANELS	(3) 16d (3 1/2" x 0.135") @ 16" O.C.

NO.	DESCRIPTION OF BUILDING ELEMENT	FASTNERS
16	STUD TO SOLE PLATE (TOE NAIL)	(3) 8d (2 1/2" x 0.113") OR (2) 16d (3 1/2" x 0.135")
17	TOP OR SOLE PLATE TO STUD (END NAIL)	(2) 16d (3 1/2" x 0.135")
18	TOP PLATES, LAPS AT CORNERS AND INTERSECTIONS (FACE NAIL)	(2) 10d (3" x 0.128")
19	1" BRACE TO EACH STUD AND PLATE (FACE NAIL)	(2) 8d (2 1/2" x 0.113") OR (2) STAPLES 1 3/4"
20	1" x 6" SHEATHING TO EACH BEARING (FACE NAIL)	(2) 8d (2 1/2" x 0.113") OR (2) STAPLES 1 3/4"
21	1" x 8" SHEATHING TO EACH BEARING (FACE NAIL)	(2) 8d (2 1/2" x 0.113") OR (3) STAPLES 1 3/4"
22	WIDER THAN 1" x 8" SHEATHING TO EACH BEARING (FACE NAIL)	(3) 8d (2 1/2" x 0.113") OR (4) STAPLES 1 3/4"
23	JOIST TO SILL OR GIRDER (TOE NAIL)	(3) 8d (2 1/2" x 0.113")
24	1" x 6" SUBFLOOR OR LESS TO EACH JOIST (FACE NAIL)	(2) 8d (2 1/2" x 0.113") OR (2) STAPLES 1 3/4"
25	2" SUBFLOOR TO JOIST OR GIRDER (BLIND AND FACE NAIL)	(2) 16d (3 1/2" x 0.135")
26	RIM JOIST TO TOP PLATE (TOE NAIL) ROOF APPLICATOIN ALSO	8d (2 1/2" x 0.113") @ 6" O.C.
27	2" PLANKS (PLANK & BEAM - FLOOR & ROOF)	(2) 16d (3 1/2" x 0.135") @ E.E.
28	BUILT-UP GIRDERS & BEAMS, 2" LUMBER LAYERS	10d (3" x 0.128") NAIL EA. LAYER 32" O.C. AT TOP AND BOTT. STAGGERED. TWO NAILS AT ENDS AND AT EA. SPLICE.
29	LEDGER STRIP SUPPORTING JOISTS OR RAFTERS	(3) 16d (3 1/2" x 0.135") AT EACH JOIST OR RAFTER

NO.	BUILDING MATERIALS	DESCRIPTION OF FASTENERS	NAILING PATTERN	
			EDGES	INTERMEDIATE SUPPORTS
WOOD STRUCTURAL PANELS, SUBFLOOR, ROOF AND INTERIOR WALL SHEATHING TO FRAMING & PARTICLE BOARD WALL SHEATHING TO FRAMING				
30	3/8" - 1/2"	6d (2" x 0.113") COMMON NAIL (SUBFLOOR, WALL) (j) 8d (2 1/2" x 0.131") COMMON NAIL (ROOF)	6"	12" (g)
31	5/16" - 1/2"	6d (2" x 0.113") COMMON NAIL (SUBFLOOR, WALL) 8d (2 1/2" x 0.131") COMMON NAIL (ROOF) (f)	6"	12" (g)
32	19/32" - 1"	8d (2 1/2" x 0.131") COMMON NAIL	6"	12" (g)
33	1 1/8" - 1 1/4"	10d (3" x 0.148") COMMON NAIL OR 8d (2 1/2" x 0.131") DEFORMED NAIL	6"	12"
OTHER WALL SHEATHING (h)				
34	1/2" STRUCTURAL CELLULOSIC FIBERBOARD SHEATHING	1/2" GALVANIZED ROOFING NAIL, 7/16' CROWN OR 16 GA. STAPLE, 1" CROWN & 1 1/4" LONG	3"	6"
35	25/32" STRUCTURAL CELLULOSIC FIBERBOARD SHEATHING	1 3/4" GALVANIZED ROOFING NAIL, 7/16' CROWN OR 16 GA. STAPLE, 1" CROWN & 1 1/2" LONG	3"	6"
36	1/2" GYPSUM SHEATHING (d)	1 1/2" GALVANIZED ROOFING NAIL OR 1 1/2" LONG GALVANIZED STAPLES, OR 1 1/4" SCREWS TYPE W OR S.	7"	7"
37	1/2" GYPSUM SHEATHING (d)	1 3/4" GALVANIZED ROOFING NAIL OR 1 5/8" LONG GALVANIZED STAPLES, OR 1 5/8" SCREWS TYPE W OR S.	7"	7"
WOOD STRUCTURAL PANELS, COMBINATION OF SUBFLOOR UNDERLAYMENT TO FRAMING				
38	3/4" AND LESS	6d (2" x 0.120") DEFORMED NAIL OR 8d (2 1/2" x 0.131") COMMON NAIL	6"	12"
39	7/8" - 1"	8d (2 1/2" x 0.131") COMMON NAIL OR 8d (2 1/2" x 0.120") DEFORMED NAIL	6"	12"
40	1 1/8" - 1 1/4"	10d (3" x 0.148") COMMON NAIL OR 8d (2 1/2" x 0.120") DEFORMED NAIL	6"	12"

REVIEWED
By Michael Kyne at 2:23 pm, May 23, 2022

APPROVED
Montgomery County
Historic Preservation Commission

© COPYRIGHT 2016
Structural Engineering content of this drawings are property of structBIM LLC and are issued for this project only. Any re-use or re-production of these drawings shall not be done without written consent of structBIM LLC. These drawings are to be read in conjuction with project specifications and drawings from other consultants. These drawings shall not be used as shop drawings. Do not scale drawings, use dimensions as specified.

G T M A R C H I T E C T S
7735 OLD GEORGETOWN ROAD
SUITE 700
BETHESDA, MD 20814
(240)333-2000
(240)333-2001 FAX
WWW.GTMARCHITECTS.COM
GTM

Seal

Consultant

structBIM
ENGINEERS
WE DESIGN....WE BIM
46400 BENEDICT DR, SUITE #211
PHONE: 703-657-4481
E-MAIL: info@structBIM.com

Project

19 HIGH STREET LOT 4
BROOKVILLE, MD

LOT 4

I certify that these documents were prepared or approved by me, and that I am a duly licensed Professional Engineer under the laws of the State of Maryland, license number 40082, Expiration Date: 02-13-2023.

N

Issue Description	Date

structBIM Project No.	22-0165
Checked By	KK
Drawn By	KK
Scale	1/4" = 1'-0"

Sheet Title

GENERAL NOTES

Sheet No.

SG

COPYRIGHT, 2016 structBIMEngineers, LLC.
PLOTTED ON: 4/15/2022 12:52:13 PM

FILE NAME:

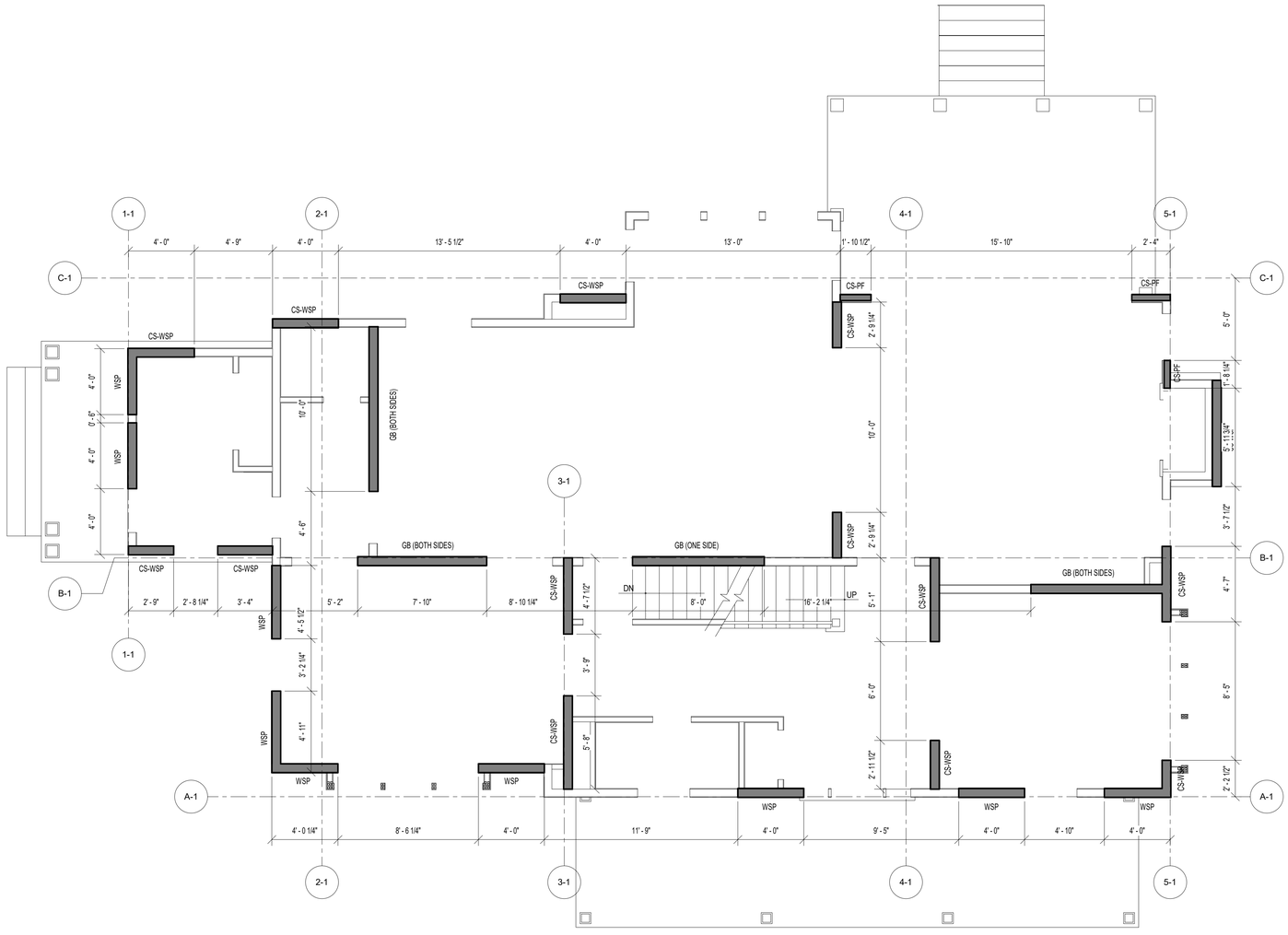

1 SWB1 FIRST FLOOR WALL BRACING PLAN
SCALE: 1/4" = 1'-0"

PLAN LEGENDS & SYMBOLS:

- INDICATES BEARING WALL
- INDICATES DRAIN HOLE FROM ABOVE
- INDICATES JOIST/TRUSS HANEGR (REFER TO SHOP DWGS)
- INDICATES FRAMING DIRECTION
- INDICATES REBAR DIRECTION
- (__J+__S) — INDICATES NO. OF KING STUDS AT EACH END; INDICATES NO. OF JACK STUDS AT EACH END
- WF?? — INDICATES WALL FOOTING; WIDTH OF WALL FOOTING IN INCHES
- TS?? — INDICATES THICKENED SLAB; WIDTH OF THICKENED SLAB IN INCHES
- Fx.x — INDICATES ISOLATED COLUMN FOOTING; INDICATES SIZE OF FOOTING IN DECIMAL FEET
- ML?? — MICROLAM LVL 2.0E; DEPTH OF MICROLAM LVL IN INCHES
- LSL?? — LAMINATED STRAND LUMBER 1.7E; DEPTH OF TIMBERSTAND LSL BEAM IN INCHES
- PSL?? — PARALLAM STRAND LUMBER 2.0E; WIDTHxDEPTH OF MEMBER
- CC — COLUMN CAP
- CB — COLUMN BASE
- HD — HOLD DOWN ANCHOR
- MS — METAL STRAP
- H — JOIST/TRUSS/BEAM HANGER
- HC — HURRICANE CLIPS

REVIEWED
By Michael Kyne at 2:23 pm, May 23, 2022

APPROVED
Montgomery County
Historic Preservation Commission

WALL BRACING/SHEAR WALL SCHEDULE

MARK	DESCRIPTION	FASTENING PATTERN
CS-PF	7/16" APA RATED OSB SHEATHING	8d COMMON NAILS (2 1/2" x 0.131") @ 6" O.C. ON EDGES & 12" O.C. IN-FIELD
CS-WSP	7/16" APA RATED OSB SHEATHING	8d COMMON NAILS (2 1/2" x 0.131") @ 6" O.C. ON EDGES & 12" O.C. IN-FIELD
GB (BOTH SIDES)	1/2" GYPSUM WALL BOARD SHEATHING	1 1/2 " GALVANIZED ROOFING NAILS OR 1 1/2" GALVANIZED STAPLES OR 1 1/4" SCREWS TYPE W OR S @ 7" O.C. ON EDGES & IN-FIELD
GB (ONE SIDE)	1/2" GYPSUM WALL BOARD SHEATHING	1 1/2 " GALVANIZED ROOFING NAILS OR 1 1/2" GALVANIZED STAPLES OR 1 1/4" SCREWS TYPE W OR S @ 7" O.C. ON EDGES & IN-FIELD
WSP	7/16" APA RATED OSB SHEATHING	8d COMMON NAILS (2 1/2" x 0.131") @ 6" O.C. ON EDGES & 12" O.C. IN-FIELD

Ultimate Wind Speed (mph)		115																
BWL Designation		A-1		B-1		C-1		1-1		2-1		3-1		4-1		5-1		
No. of Floors above BWL		1		1		1		0		1		1		1		1		
BWP Method		WSP		GB		CS-WSP		WSP		GB		CS-WSP		CS-WSP		CS-WSP		
Average BWL Spacing (ft)		14.5		16.5		17		8.75		23		20.21		22.23		16		
Tabular Requirement (ft)		5.58		10.58		5.60		2.00		14.15		6.55		7.06		5.30		
Adjustments	Exposure	B	1.00	B	1.00	B	1.00	B	1.00	B	1.00	B	1.00	B	1.00	B	1.00	
	Eave-to-Ridge Ht. (ft)	15.00	1.15	15.00	1.15	15.00	1.15	15.00	1.30	15.00	1.15	15.00	1.15	15.00	1.15	15.00	1.15	
	Max. Wall Ht. (ft)	10.00	1.00	10.00	1.00	10.00	1.00	10.00	1.00	10.00	1.00	10.00	1.00	10.00	1.00	10.00	1.00	
	No. of BWLs	2	1.00	2	1.00	3	1.30	≥5	1.60	≥5	1.60	≥5	1.60	≥5	1.60	≥5	1.60	
	Omit Interior Finish?	No	1.00	No	1.00	No	1.00	No	1.00	No	1.00	No	1.00	No	1.00	No	1.00	
	Added Hold-downs?	No	1.00	No	1.00	No	1.00	No	1.00	No	1.00	No	1.00	No	1.00	No	1.00	
	Joints Blocked?	Yes	1.00	Yes	1.00	Yes	1.00	Yes	1.00	Yes	1.00	Yes	1.00	Yes	1.00	Yes	1.00	
	Fasteners @ 4" o.c.?	No	1.00	No	1.00	No	1.00	No	1.00	Yes	0.70	Yes	0.83	Yes	0.83	No	1.00	
Required BWP Length (ft)		6.41		12.16		8.37		4.16		18.23		10.01		10.78		9.75		
Actual BWPs	BWP	Method	Length	Method	Length	Method	Length	Method	Length	Method	Length	Method	Length	Method	Length	Method	Length	
	Contributing Length (ft) 1	WSP	4.00	CS-WSP	2.75	CS-WSP	4.00	WSP	4.00	WSP	5.00	CS-WSP	5.75	CS-WSP	3.00	CS-WSP	2.16	
	2	WSP	4.00	CS-WSP	3.33	CS-WSP	4.00	WSP	4.00	WSP	4.50	CS-WSP	4.66	CS-WSP	5.00	CS-WSP	4.58	
	3	WSP	4.00	GB (dis)	7.81	CS-WSP	4.00			GB (dis)	10.00			CS-WSP	2.75	CS-PF	2.49	
	4	WSP	4.00	GB (ss)	4.00	CS-PF	1.81							CS-WSP	2.75	CS-PF	2.49	
	5	WSP	4.00	GB (dis)	8.00	CS-PF	2.33											
	6																	
	7																	
Actual BWP Length (ft)		20.00		25.89		16.14		8.00		19.50		10.41		13.50		11.72		
Actual ≥ Required?		PASS		PASS		PASS		PASS		PASS		PASS		PASS		PASS		
BWPs ≤ 20' Apart?		Yes		Yes		Yes		Yes		Yes		Yes		Yes		Yes		
≥ 2 Panels in BWL?		Yes		Yes		Yes		Yes		Yes		Yes		Yes		Yes		
BWP 10' from Ends?		Yes		Yes		Yes		Yes		Yes		Yes		Yes		Yes		
Continuous Sheathing		End 1	End 2	End 1	End 2	End 1	End 2	End 1	End 2	End 1	End 2	End 1	End 2	End 1	End 2	End 1	End 2	
End Conditions		1	1	1	1	1	1	1	1	1	1	1	1	1	1	1	1	
BWL Compliance		PASS		PASS		PASS		PASS		PASS		PASS		PASS		PASS		

© COPYRIGHT 2016
Structural Engineering content of this drawings are property of structBIM LLC and are issued for this project only. Any re-use or re-production of these drawings shall not be done without written consent of structBIM LLC. These drawings are to be read in conjuction with project specifications and drawings from other consultants. These drawings shall not be used as shop drawings. Do not scale drawings, use dimensions as specified.

GTM ARCHITECTS

7735 OLD GEORGETOWN ROAD
SUITE 700
BETHESDA, MD 20814
(240)333-2000
(240)333-2001 FAX
WWW.GTMARCHITECTS.COM

GTM

Seal

STATE OF MARYLAND
MICHAEL KANE
40082
PROFESSIONAL ENGINEER

Consultant

structBIM ENGINEERS
WE DESIGN....WE BIM
46400 BENEDICT DR, SUITE #211
PHONE: 703-657-4481
E-MAIL: info@structBIM.com

Project

19 HIGH STREET LOT 4
BROOKVILLE, MD

LOT 4

I certify that these documents were prepared or approved by me, and that I am a duly licensed Professional Engineer under the laws of the State of Maryland, license number 40082, Expiration Date: 02-13-2023.

Issue Description	*Date*

structBIM Project No.	22-0165
Checked By	KK
Drawn By	KK
Scale	1/4" = 1'-0"

Sheet Title
FIRST FLOOR WALL BRACING PLAN

Sheet No.

SWB1

COPYRIGHT, 2016 structBIMEngineers, LLC.

PLOTTED ON: 4/15/2022 12:52:15 PM

FILE NAME:

REVIEWED
By Michael Kyne at 2:23 pm, May 23, 2022

APPROVED
Montgomery County
Historic Preservation Commission

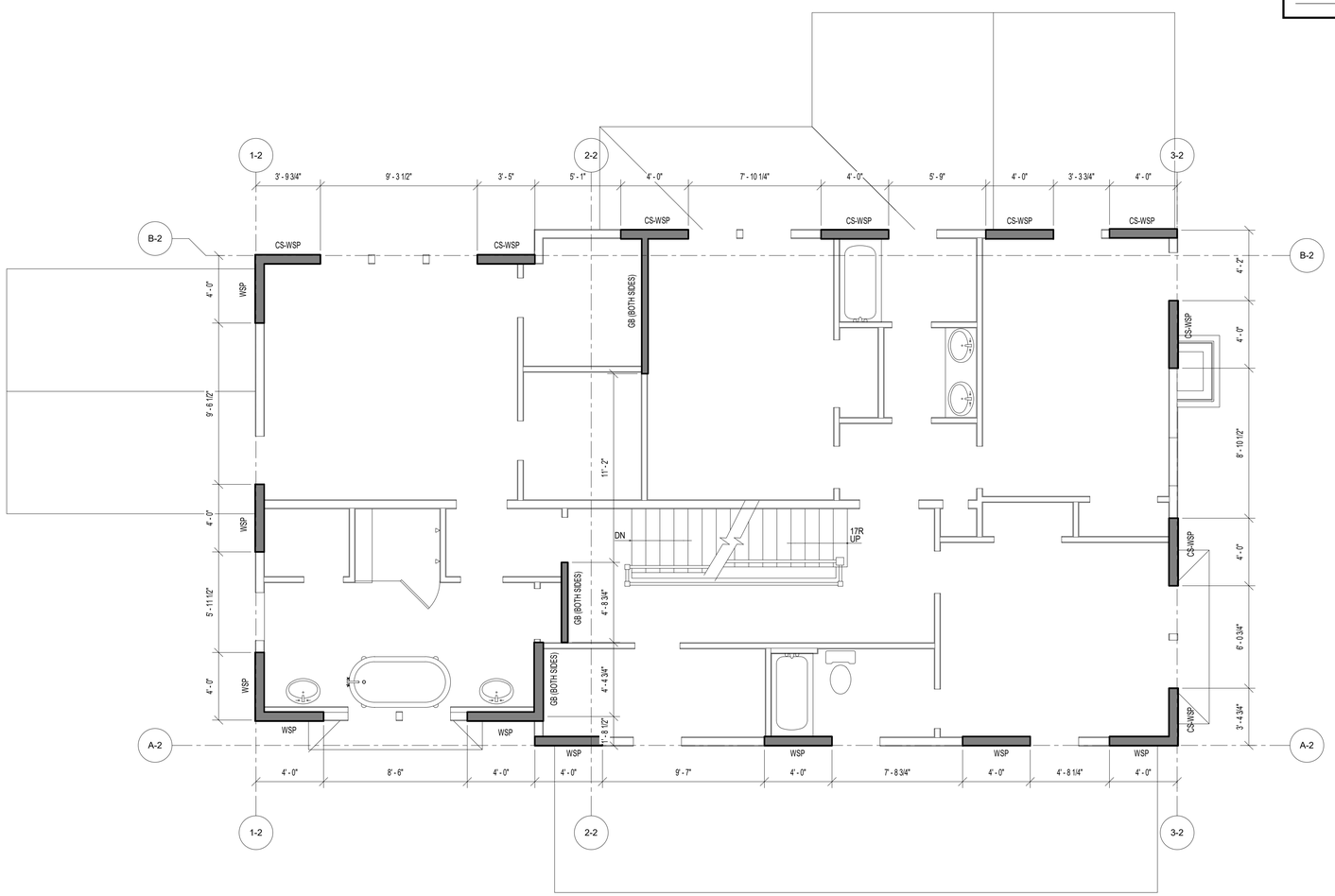

1 SWB2 SECOND FLOOR WALL BRACING PLAN
SCALE: 1/4" = 1'-0"

PLAN LEGENDS & SYMBOLS:

- INDICATES BEARING WALL
- INDICATES DRAIN HOLE FROM ABOVE
- INDICATES JOIST/TRUSS HANEGR (REFER TO SHOP DWGS)
- INDICATES FRAMING DIRECTION
- INDICATES REBAR DIRECTION
- (_J#_S) — INDICATES NO. OF KING STUDS AT EACH END; INDICATES NO. OF JACK STUDS AT EACH END
- WF?? — INDICATES WALL FOOTING; WIDTH OF WALL FOOTING IN INCHES
- TS?? — INDICATES THICKENED SLAB; WIDTH OF THICKENED SLAB IN INCHES
- F.x.x — INDICATES ISOLATED COLUMN FOOTING; INDICATES SIZE OF FOOTING IN DECIMAL FEET
- ML?? — MICROLAM LVL 2.0E; DEPTH OF MICROLAM LVL IN INCHES
- LSL?? — LAMINATED STRAND LUMBER 1.7E; DEPTH OF TIMBERSTAND LSL BEAM IN INCHES
- PSL?? — PARALLAM STRAND LUMBER 2.0E; WIDTHxDEPTH OF MEMBER
- CC — COLUMN CAP
- CB — COLUMN BASE
- HD — HOLD DOWN ANCHOR
- MS — METAL STRAP
- H — JOIST/TRUSS/BEAM HANGER
- HC — HURRICANE CLIPS

WALL BRACING/SHEAR WALL SCHEDULE

MARK	DESCRIPTION	FASTENING PATTERN
CS-PF	7/16" APA RATED OSB SHEATHING	8d COMMON NAILS (2 1/2" x 0.131") @ 6" O.C. ON EDGES & 12" O.C. IN-FIELD
CS-WSP	7/16" APA RATED OSB SHEATHING	8d COMMON NAILS (2 1/2" x 0.131") @ 6" O.C. ON EDGES & 12" O.C. IN-FIELD
GB (BOTH SIDES)	1/2" GYPSUM WALL BOARD SHEATHING	1 1/2 " GALVANIZED ROOFING NAILS OR 1 1/2" GALVANIZED STAPLES OR 1 1/4" SCREWS TYPE W OR S @ 7" O.C. ON EDGES & IN-FIELD
GB (ONE SIDE)	1/2" GYPSUM WALL BOARD SHEATHING	1 1/2 " GALVANIZED ROOFING NAILS OR 1 1/2" GALVANIZED STAPLES OR 1 1/4" SCREWS TYPE W OR S @ 7" O.C. ON EDGES & IN-FIELD
WSP	7/16" APA RATED OSB SHEATHING	8d COMMON NAILS (2 1/2" x 0.131") @ 6" O.C. ON EDGES & 12" O.C. IN-FIELD

Ultimate Wind Speed (mph)		115									
BWL Designation		A-2		B-2		1-2		2-2		3-2	
No. of Floors above BWL		0		0		0		0		0	
BWP Method		WSP		CS-WSP		WSP		GB		CS-WSP	
Average BWL Spacing (ft)		29		29		19.81		27.25		17.33	
Tabular Requirement (ft)		5.30		4.40		3.47		8.68		3.10	
Adjustments	Exposure	B	1.00	B	1.00	B	1.00	B	1.00	B	1.00
	Eave-to-Ridge Ht. (ft)	15.00	1.30	15.00	1.30	15.00	1.30	15.00	1.30	15.00	1.30
	Max. Wall Ht. (ft)	9.00	0.95	9.00	0.95	9.00	0.95	9.00	0.95	9.00	0.95
	No. of BWLs	2	1.00	2	1.00	3	1.30	3	1.30	3	1.30
	Omit Interior Finish?	No	1.00	No	1.00	No	1.00	No	1.00	No	1.00
	Added Hold-downs?	No	1.00	No	1.00	No	1.00	No	1.00	No	1.00
	Joints Blocked?	Yes	1.00	Yes	1.00	Yes	1.00	Yes	1.00	Yes	1.00
	Fasteners @ 4" o.c.?	No	1.00	No	1.00	No	1.00	No	1.00	No	1.00
Required BWP Length (ft)		6.55		5.43		5.57		13.93		4.98	
Actual BWPs	BWP	Method	Length	Method	Length	Method	Length	Method	Length	Method	Length
	Contributing Length (ft) WSP=factor/ SFB=factor/ GB(sp)=0.5factor/ GB(ds)=factor/ CS-PF=1.5factor/ PF(s)=1.5factor/ PF(ns)/ ABW=4	1	WSP	4.00	CS-WSP	3.75	WSP	4.00	GB (ds)	4.33	CS-WSP	3.33
		2	WSP	4.00	CS-WSP	3.50	WSP	4.00	GB (ss)	4.75	CS-WSP	4.00
		3	WSP	4.00	CS-WSP	4.00	WSP	4.00	GB (ds)	8.00	CS-WSP	4.00
		4	WSP	4.00	CS-WSP	4.00						
		5	WSP	4.00	CS-WSP	4.00						
		6	WSP	4.00	CS-WSP	4.00						
		7									
Actual BWP Length (ft)		24.00		23.25		12.00		17.08		11.33	
Actual ≥ Required?		PASS		PASS		PASS		PASS		PASS	
BWPs ≤ 20' Apart?		Yes		Yes		Yes		Yes		Yes	
≥ 2 Panels in BWL?		Yes		Yes		Yes		Yes		Yes	
BWP 10' from Ends?		Yes		Yes		Yes		Yes		Yes	
Continuous Sheathing		End 1	End 2	End 1	End 2	End 1	End 2	End 1	End 2	End 1	End 2
End Conditions		1	1	1	1	1	1	1	1	1	1
BWL Compliance		PASS		PASS		PASS		PASS		PASS	

© COPYRIGHT 2016
Structural Engineering content of this drawings are property of structBIM LLC and are issued for this project only. Any re-use or re-production of these drawings shall not be done without written consent of structBIM LLC. These drawings are to be read in conjuction with project specifications and drawings from other consultants. These drawings shall not be used as shop drawings. Do not scale drawings, use dimensions as specified.

GTM ARCHITECTS

7735 OLD GEORGETOWN ROAD
SUITE 700
BETHESDA, MD 20814
(240)333-2000
(240)333-2001 FAX
WWW.GTMARCHITECTS.COM

GTM

Seal

STATE OF MARYLAND — MICHAEL KANE — 40082 — PROFESSIONAL ENGINEER

Consultant

structBIM ENGINEERS
WE DESIGN....WE BIM
46400 BENEDICT DR, SUITE #211
PHONE: 703-657-4481
E-MAIL: info@structBIM.com

Project

19 HIGH STREET LOT 4
BROOKVILLE, MD

LOT 4

I certify that these documents were prepared or approved by me, and that I am a duly licensed Professional Engineer under the laws of the State of Maryland, license number 40082, Expiration Date: 02-13-2023.

Issue Description	*Date*

structBIM Project No.	22-0165
Checked By	KK
Drawn By	KK
Scale	1/4" = 1'-0"

Sheet Title
SECOND FLOOR WALL BRACING PLAN

Sheet No.

SWB2

COPYRIGHT, 2016 structBIMEngineers, LLC.

PLOTTED ON: 4/15/2022 12:52:16 PM

FILE NAME:

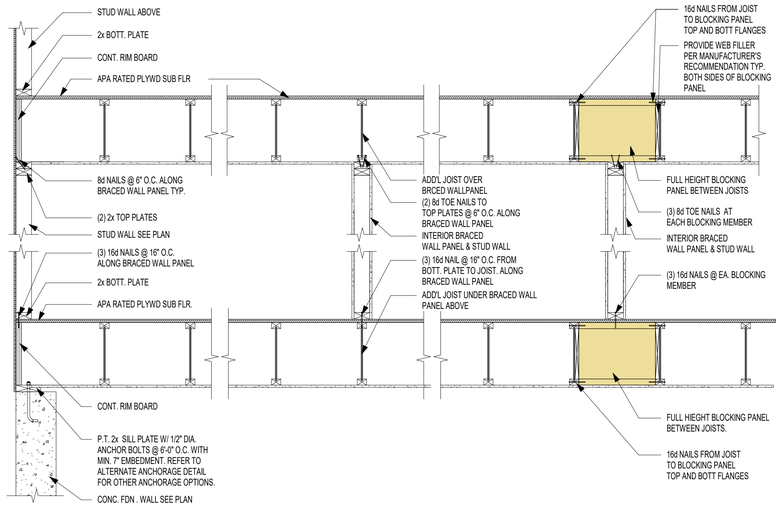

3 SWB3 BRACED WALL PANEL PARALLEL TO I-JOISTS
SCALE: 3/4" = 1'-0"

WALL BRACING/SHEAR WALL SCHEDULE		
MARK	DESCRIPTION	FASTENING PATTERN
CS-PF	7/16" APA RATED OSB SHEATHING	8d COMMON NAILS (2 1/2" x 0.131") @ 6" O.C. ON EDGES & 12" O.C. IN-FIELD
CS-WSP	7/16" APA RATED OSB SHEATHING	8d COMMON NAILS (2 1/2" x 0.131") @ 6" O.C. ON EDGES & 12" O.C. IN-FIELD
GB (BOTH SIDES)	1/2" GYPSUM WALL BOARD SHEATHING	1 1/2 " GALVANIZED ROOFING NAILS OR 1 1/2" GALVANIZED STAPLES OR 1 1/4" SCREWS TYPE W OR S @ 7" O.C. ON EDGES & IN-FIELD
GB (ONE SIDE)	1/2" GYPSUM WALL BOARD SHEATHING	1 1/2 " GALVANIZED ROOFING NAILS OR 1 1/2" GALVANIZED STAPLES OR 1 1/4" SCREWS TYPE W OR S @ 7" O.C. ON EDGES & IN-FIELD
WSP	7/16" APA RATED OSB SHEATHING	8d COMMON NAILS (2 1/2" x 0.131") @ 6" O.C. ON EDGES & 12" O.C. IN-FIELD

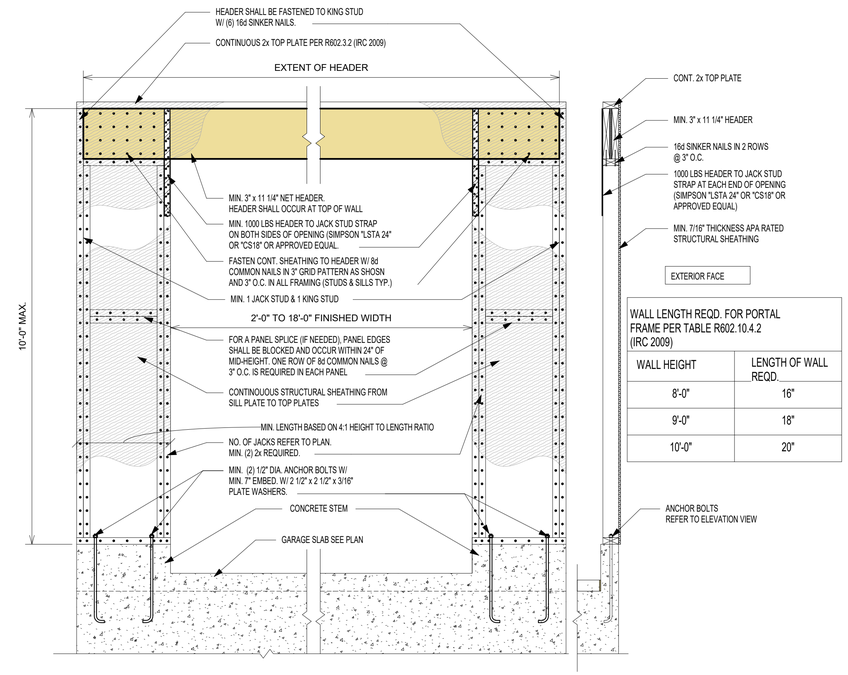

WALL LENGTH REQD. FOR PORTAL FRAME PER TABLE R602.10.4.2 (IRC 2009)

WALL HEIGHT	LENGTH OF WALL REQD.
8'-0"	16"
9'-0"	18"
10'-0"	20"

ELEVATION VIEW **SECTION VIEW**

1 SWB3 PORTAL FRAME @ GARAGE (PFG) LEFT SIDE ONLY
SCALE: 3/4" = 1'-0"

REVIEWED
By Michael Kyne at 2:23 pm, May 23, 2022

APPROVED
Montgomery County
Historic Preservation Commission

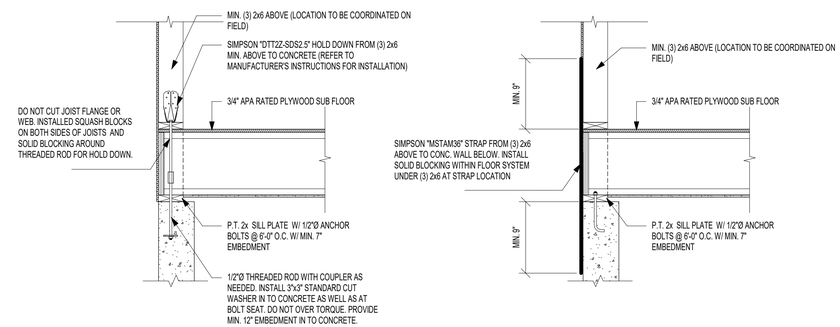

HOLD DOWN OPTION WITH SIMPSON "DTT2Z" **HOLD DOWN OPTION WITH SIMPSON "MSTAM36"**

2 SWB3 TYP. HOLD DOWN DETAILS (APPLY AT CORNERS < 24")
SCALE: 3/4" = 1'-0"

© COPYRIGHT 2016
Structural Engineering content of this drawings are property of structBIM LLC and are issued for this project only. Any re-use or re-production of these drawings shall not be done without written consent of structBIM LLC. These drawings are to be read in conjuction with project specifications and drawings from other consultants. These drawings shall not be used as shop drawings. Do not scale drawings, use dimensions as specified.

GTM ARCHITECTS
7735 OLD GEORGETOWN ROAD
SUITE 700
BETHESDA, MD 20814
(240)333-2000
(240)333-2001 FAX
WWW.GTMARCHITECTS.COM
GTM

Seal

STATE OF MARYLAND · KENNETH A. KANTOR · 40082 · PROFESSIONAL ENGINEER

Consultant

structBIM ENGINEERS
WE DESIGN....WE BIM
46400 BENEDICT DR, SUITE #211
PHONE: 703-657-4481
E-MAIL: info@structBIM.com

Project

19 HIGH STREET LOT 4
BROOKVILLE, MD

LOT 4

I certify that these documents were prepared or approved by me, and that I am a duly licensed Professional Engineer under the laws of the State of Maryland, license number 40082, Expiration Date: 02-13-2023.

Issue Description	Date

structBIM Project No.	22-0165
Checked By	KK
Drawn By	KK
Scale	3/4" = 1'-0"

Sheet Title
WALL BRACING DETAILS & SCHEDULE

Sheet No.

SWB3

COPYRIGHT, 2016 structBIMEngineers, LLC.
PLOTTED ON: 4/15/2022 12:52:22 PM

FILE NAME: