HISTORIC PRESERVATION COMMISSION

Marc Elrich
County Executive

Robert Sutton
Chairman

Date: May 1, 2024

MEMORANDUM

TO: Rabbiah Sabbakhan
Department of Permitting Services
FROM: Dan Bruechert
Historic Preservation Section
Maryland-National Capital Park & Planning Commission
SUBJECT: Historic Area Work Permit # 1061206 - Solar Panels

The Montgomery County Historic Preservation Commission (HPC) has reviewed the attached application for a Historic Area Work Permit (HAWP). This application was **Approved** at the April 3, 2024 HPC meeting.

The HPC staff has reviewed and stamped the attached construction drawings**.**

THE BUILDING PERMIT FOR THIS PROJECT SHALL BE ISSUED CONDITIONAL UPON ADHERENCE TO THE ABOVE APPROVED HAWP CONDITIONS AND MAY REQUIRE APPROVAL BY DPS OR ANOTHER LOCAL OFFICE BEFORE WORK CAN BEGIN.

Applicant: John Salmen
Address: 16 Montgomery Ave., Takoma Park

This HAWP approval is subject to the general condition that the applicant will obtain all other applicable Montgomery County or local government agency permits. After the issuance of these permits, the applicant must contact this Historic Preservation Office if any changes to the approved plan are made. Once work is complete the applicant will contact Dan Bruechert at 301-563-3408 or dan.bruechert@montgomeyrplanning.org to schedule a follow-up site visit.

DAVID C. HERNANDEZ, PE

513-418-8812 4912 Prospect Ave., Blue Ash OH 45242 davehernandezpe@gmail.com

DATE: April 12, 2024

RE: 16 Montgomery Ave, Takoma Park, MD 20912, USA

To Whom It May Concern,

As per your request, Exactus Energy has conducted a site assessment of the building at the above address.

PV solar panels are proposed to be installed on roof areas as shown in the submitted plans. The panels are clamped and attached to the roof deck with a rail-less mounting system. The PV system (PV modules, racking, mounting hardware, etc.) shall be installed according to the manufacturer's approved installation specifications. The Engineer of Record and Exactus Energy claim no responsibility for misuse or improper installation.

It was found that the roof systems satisfactorily meet the applicable code standards included in the IBC 2018, IRC 2018 and ASCE 7-16 as well as the design criteria shown below:

Design Criteria:

Risk Category	= II
Exposure Category	= B
Wind speed	= 115 mph
Ground snow load	= 30 psf
Roof dead load	= 12 psf
Solar system dead load	= 3 psf

Overall, the roof systems integrity is adequate to support the PV alteration with no modifications or reinforcements as required per 2018 IEBC Sections 502.4 and 502.5.

This letter was completed in accordance to recognized design standards, professional engineering experience, and judgement. Prior to installation, the on-site contractor must notify Exactus Energy if there are any discrepancies, or damages to the members, that was not addressed in the plan set.

If you have any further questions, please do not hesitate to contact me.

Acknowledged by:

David C. Hernandez, PE

Digitally signed by David C. Hernandez,
Date: 2024.04.12 11:58:02 -04:00

STATE OF MARYLAND
DAVID C. HERNANDEZ
49993
PROFESSIONAL ENGINEER
DCH GLOBAL

PROFESSIONAL CERTIFICATION. I HEREBY CERTIFY THAT THESE DOCUMENTS WERE PREPARED OR APPROVED BY ME, AND THAT I AM A DULY LICENSED PROFESSIONAL ENGINEER UNDER THE LAWS OF THE STATE OF MARYLAND, LICENSE NO. 49993, EXP 10/06/2024.

Sgd.04/12/24

APPROVED

Montgomery County

Historic Preservation Commission

REVIEWED

By Dan.Bruechert at 1:11 pm, May 01, 2024

APPROVED
Montgomery County
Historic Preservation Commission

REVIEWED
By Dan.Bruechert at 1:11 pm, May 01, 2024

Solar Energy World
Because Tomorrow Matters

Project Property Owner John Salmen

Address 16 Montgomery Ave, Takoma Park, MD 20912, USA

☑ I reviewed the design of the photovoltaic (PV) system, as designed by the manufacturer, and the design criteria utilized for the mounting equipment and panel mounting assembly (rack system) for the installation of (29) panels supported by the rack system, as shown on the drawings prepared for the above referenced address. I certify that the configurations and design criteria meet the standards and requirements of the International Residential Code (IRC) and International Existing Building Code (IEBC) adopted by Montgomery County in COMCOR08.00.02.

☑ The attachment of the rack system to the building at the above address, including the location, number, and type of attachment points; the number of fasteners per attachment point; and the specific type of fasteners (size, diameter, length, minimum embedment into structural framing, etc.) meets the standards and requirements of the IRC and IEBC adopted by Montgomery County in COMCOR 08.00.02.

☑ I evaluated the existing roof structure of the building at the above address and analyzed its capacity to support the additional loads imposed by the PV system. I certify that no structural modifications of the existing roof structure are required. The existing roof structure meets the standards and requirements of the IRC and IEBC, adopted by Montgomery County in COMCOR 08.00.02, necessary to support the PV system.

□ I evaluated the existing roof structure of the building at the above address and analyzed its capacity to support the additional loads imposed by the PV system. Structural modifications of the existing roof structure are required. Icertify that the roof structure, as modified on the drawings for this project, will support the additional loads imposed by the PV system. I further certify that design of the modified roof structure meets the standards and requirements of the IRC and IEBC, adopted by Montgomery County in COMCOR 08.00.02.

☑ I prepared or approved the construction documents for the mounting equipment, rack system, roof structure forthis project.

49993
Maryland PE License Number

Date 04/12/24

Seal

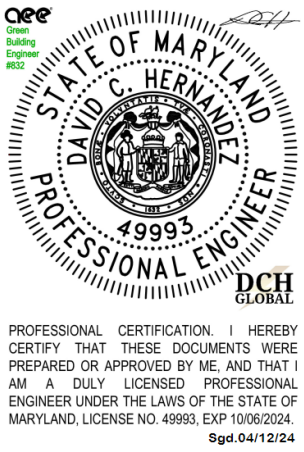

Signature David C. Hernandez, PE Digitally signed by David C. Hernandez, PE Date: 2024.04.12 11:58:02 -04:00

Must be submitted with plans

SolarEnergyWorld
Because Tomorrow Matters

Property Owners Name: John Salmen

Property Owners Address: 16 Montgomery Avenue, Takoma Park, MD 20912

Address of installation if different than owner's address:

I certify that:

- ☑ I prepared or approved the electrical drawings and related documents for the photovoltaic {PV) system at the above location.
- ☑ The design of the PV system, and all electrical Installations and equipment, meets the standards and requirements of the National Electrical Code as adopted by Montgomery County *in* COMCOR 17.02.01.
- ☑ I reviewed and completed the Worksheet for PV System, which was attached to the permit application for the PV system at the **above** location.

15732

State Master Electrician License Number

Date: 02/29/2024

Signature: Matt Hess

APPROVED
Montgomery County
Historic Preservation Commission

REVIEWED
By Dan.Bruechert at 1:11 pm, May 01, 2024

APPROVED

Montgomery County

Historic Preservation Commission

REVIEWED

By Dan.Bruechert at 1:11 pm, May 01, 2024

SnapNrack™

Solar Mounting Solutions

TopSpeed™ Mounting System

Installation Manual

snapnrack.com

An Intro to SnapNrack TopSpeed™ with SpeedSeal™ Technology

SnapNrack's primary goal is to provide our customers with the lowest possible installed cost for mounting residential solar modules, without compromising the values the industry has come to expect: ease of use, quality, aesthetics, and safety. Designing with this goal in mind, we are proud to present the SnapNrack TopSpeed™ mounting system with SpeedSeal™ Technology.

SnapNrack has created a ground breaking system combining great features and benefits we are known for, with our TopSpeed™ System and the most up to date technical innovation in the industry, thus reducing parts while driving down labor, material, and total installation costs. Designed to work with standard module frames, achieving UL 2703 Listing for Grounding/ Bonding and Fire Classification, providing integrated wire management, aesthetics and our industry leading "Snap-In" features, SnapNrack is providing the simplest and most cost effective solar mounting solution on the market with TopSpeed™ including integrated fasteners and SpeedSeal™ Technology.

Advantages of Installing the SnapNrack TopSpeed™ System

Modules are installed with a minimum number of parts

This elimination of parts leads to a lower estimated system cost for both the installer and home owner.

Built in Wire Management and Aesthetics

Extensive wire management solutions have been designed specifically for the system that adapts to multiple possible mounting positions.

The system is designed to be aesthetically pleasing and sturdy with a skirt that provides considerable strength at the leading edge and an elegant look for those seeking high end looking systems.

SnapNrack TopSpeed™ includes SpeedSeal™ Technology

SpeedSeal™ Technology features integrated flashing. This eliminates loosening layers of composition and removing nails with a pry bar, leading to less damage to the roof, minimized potential roof leaks, and much faster installs.

TopSpeed™ Mounts attach Directly to the Decking

As well as all of the benefits associated with the standard SpeedSeal™ Technology, TopSpeed™ attaches to the roof sheathing and does not require rafter attachment. Simply attaching to the roof sheathing removes the requirement for finding rafters and drilling pilot holes, creating potential rafter misses that can cause leaks.

Table of Contents

Project Plans

Installation Steps

Certification Details

SnapNrack TopSpeed™ mounting system has been evaluated by Underwriters Laboratories (UL) and Listed to UL Standard 2703 for Grounding/Bonding, and Fire Classification.

Grounding/Bonding

Only specific components have been evaluated for bonding, and are identified as being in the ground path. The TopSpeed™ components that have been evaluated for bonding are the Mount Assembly (Mount Clamp Top, Module Clamp Tower, Angle Bracket), Clamp Assembly, Universal Skirt, Universal Skirt Clamp, Ground Lugs, and Smart Clips.

Universal Skirt Spacers, Mount Channel Nut, and Mount Base are not required to be bonded to the system based on the exceptions in clause 9.1 of UL 2703 1st Ed. Wire management clips are utilized to route conductors away from these components and must be assembled according to the instructions.

This mounting system may be used to ground and/or mount a PV module complying with UL 1703 or UL 61703 only when the specific module has been evaluated for grounding and/or mounting in compliance with the included instructions. See Appendix A for the list of modules tested for use with the TopSpeed™ System for integrated grounding.

Ground Lugs have been evaluated to both UL 467 and UL 2703 Listing requirements. The following ground lugs have been approved for use: SnapNrack model 242-92202, and Ilsco models GBL-4DBT and SGB-4.

The following components have been evaluated for bonding as the fault current ground path: TopSpeed™ Mount Assembly, (Mount Clamp Top, Module Clamp Tower, Angle Bracket), Clamp Assembly, Wire Management Clips, and Ground Lugs. In order to maintain the Listing for bonding, wire management clips must be assembled to route conductors away from parts that have not been evaluated for bonding.

A Listed (QIMS) and Unlisted Component (KDER3) grounding lug, SnapNrack part no. 242-92202, is attached to the module frame flange for the normal attachment of a Grounding Electrode Conductor, which provides bonding within the system and eventual connection to a Grounding Electrode, as required by the U.S. NEC. Details of part no. 242-92202 can be found in Volume 1, Section 4, and Volume 2, Section 2. When this method is used, the grounding symbol is stamped onto the body of the ground lug to identify the grounding terminal.

An alternate method of grounding, a UL Listed (KDER and QIMS) grounding lug, Ilsco (E34440 and E354420) model SGB-4 is attached to the module frame flange. When this method is used, the grounding terminal is identified by the green colored screws of the lug.

An alternate method of grounding, a UL Listed (KDER and QIMS) grounding lug, Ilsco (E34440 and E354420) model GBL-4BDT is attached to the module frame flange through the specified hardware and torque values. When this method is used, the grounding terminal is identified by the green colored set screw of the lug.

An alternate method of grounding, Enphase R/C (QIKH2)(QIMS2) model M250, M215 & C250 is bonded to the Listed PV module frame by the Enphase R/C (QIMS2) Model EFM-XXMM anodization piercing mounting/clamping kit. The total roof-mounted PV system is bonded (modules and microinverters) together and the assembly is bonded to ground through the Enphase R/C (QIMS2) Engage Cables; Model ETXX-240, ETXX-208 or ETXX-277, when properly grounded at the service entrance.
R/C (QIMS2), Dynoraxx (E357716) photovoltaic bonding device cat. no. Dynobond is an optional component that may be used with this system. The Dynobond device has been evaluated to provide module to module bonding. The Dynobond device attaches to the frame flange of adjacent modules Listed (QIMS), SnapNrack MLPE Frame Attachment Kit model 242-02151 has been investigated to bond approved MLPE device back plates to frames of modules.

Fire

SnapNrack TopSpeed™ has been investigated for a Class A System Fire Classification for Steep-Sloped and low sloped roofs with Type 1 and Type 2 modules. Because the system was tested at 5 inches above the test roof fixture, TopSpeed™ can be installed without any height restrictions due to System Fire Classification. See Appendix A for potential module-specific height restrictions due to module temperature. The Skirt is considered an optional component with respect to Fire Classification, as SnapNrack TopSpeed™ maintains the same Fire Classification Rating both with and without the skirt.

NOTE: Modules with an asterisk* have a fire rating that is different from Type 1, Type 2 or Type 29. SNR systems have only been evaluated for use with Type 1, Type 2, or Type 29 modules. Modules with a different fire type rating should be considered to not have been evaluated for use with SNR systems with respect to a system fire rating.

Inspection Practices

SnapNrack recommends a periodic re-inspection of the completed installation for loose components, loose fasteners, and any corrosion, such that if found, the affected components are to be immediately replaced.

Component Details

TopSpeed™ Structural Components

TopSpeed™ Mount

SnapNrack TopSpeed™ Mount assembly including SpeedSeal™ base, clamp top, and (4) SnapNrack #14 SS Wood Screws with 1/2″ Hex Head.

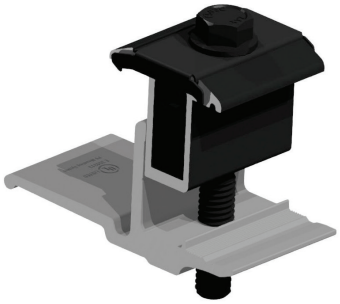

TopSpeed™ Clamp

SnapNrack TopSpeed™ Clamp assembly including including Link bottom, Link top, and springs.

Universal Skirt

SnapNrack Universal Skirt in double portrait or single landscape lengths.

Wire Managements Components

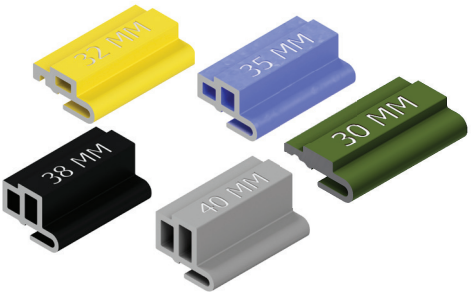

Skirt Spacers

SnapNrack Universal Skirt Spacer for 40mm, 38mm, 35mm, 32mm, and 30mm modules.

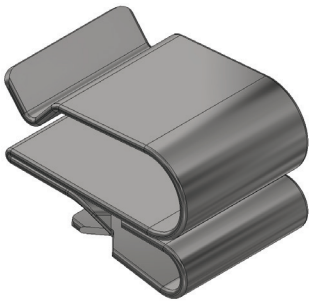

Smart Clip

Module frame cable clip, holds two PV wires or Enphase IQ-Cables.

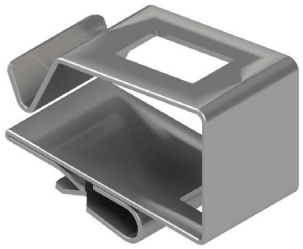

Smart Clip XL

Module frame cable clip, holds six PV wires or four Enphase IQ-Cable.

Grounding/MLPE Components

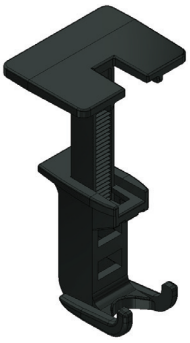

Wire Saver

Designed to secure conductors that become loose and hang below the array, holds one conductor.

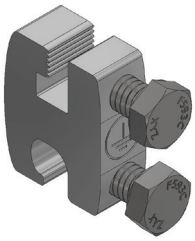

Ground Lug

SnapNrack Ground Lug assembly used for attaching the Equipment Grounding Conductor on to one module or any TopSpeed™ Mount per array.

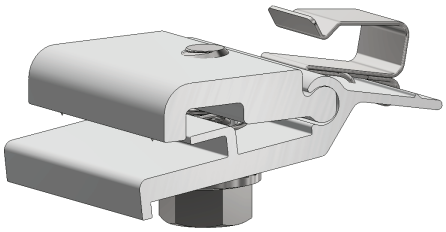

MLPE Frame Attachment Kit

Attaches MLPEs (Module Level Performance Enhancers) and other related equipment to the module frame.

Hardware Torque Specifications

The recommended torque to be applied to components for proper assembly and bonding are as follows:

Hardware Description	Torque Specification
All TopSpeed™ ½" bolts; System Leveling Bolt, TopSpeed™ Mount Clamping Bolt, Clamp Bolt	16 ft-lb
Ground Lug model 242-92202 to Module Frame or anywhere on the TopSpeed™ Mount, and Ground Lug model 242-92202 to Grounding Electrode Conductor (6-12 SOL)	8 ft-lb
MLPE Frame Attachment Kit, MLPE Rail Attachment Kit	10 ft-lb
SolarEdge Frame Mounted Microinverter Bracket to Module Frame	11 ft-lb
Enphase Frame Mounted Microinverter Bracket to Module Frame	13 ft-lb
Ground Lug model SGB-4 to module	75 in-lb
Ground Lug model SGB-4 to Grounding Electrode Conductor (4-14 SOL or STR)	35 in-lb
Ground Lug model GBL-4DBT to module	35 in-lb
Ground Lug model GBL-4DBT to Grounding Electrode Conductor (10-14 SOL or STR)	20 in-lb
Ground Lug model GBL-4DBT to Grounding Electrode Conductor (8 SOL or STR)	25 in-lb
Ground Lug model GBL-4DBT to Grounding Electrode Conductor (4-6 SOL or STR)	35 in-lb

Pre-Installation Requirements

snapnrack.com

Site Survey

- Measure the roof surfaces and develop an accurate drawing, including any obstacles such as chimneys and roof vents.
- If plans for the roof structure are available, verify that the plans match the final structure.
- Identify any roof access or setback areas as required by the local AHJ.
- Identify any construction issues that may complicate the process of locating rafters from the roof surface.
- If you find structural problems such as termite damage or cracked rafters that may compromise the structure's integrity consult a structural engineer.

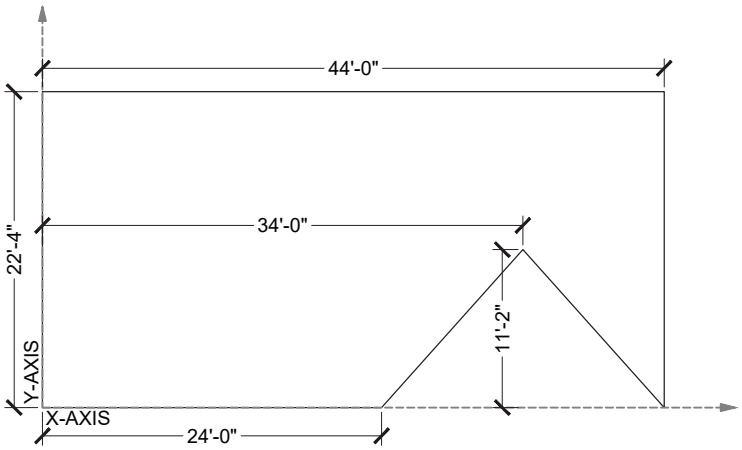

Image note: X-Axis described in this manual is cross-slope on the roof, Y-Axis is in line with the roof slope.

Design Guidance

- PV Designers should account for the 0.75 inch spacing between rows and columns of modules when creating the layout.
- Determine site conditions for calculating the engineering values, confirm site conditions and code versions comply with local AHJ requirements.
- Reference site conditions and system specifications in TopSpeed™ Structural Engineering Report to determine the number of attachments per module side.
- Insert SnapNrack installation details into design plan set specific to the project requirements.
- Draw roof attachment locations on plan set layout based on TopSpeed™ Structural Engineering.

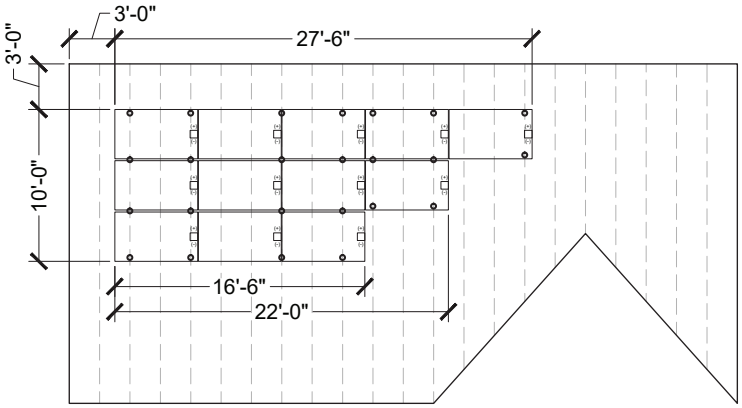

Best Practice:

If environmental load conditions require three TopSpeed™ attachments per module side this is only required when modules share attachments.

- Identify homerun and Junction Box locations based on rooftop wiring requirements.
- Mark distance from array edge to identifiable roof feature in x and y axes.

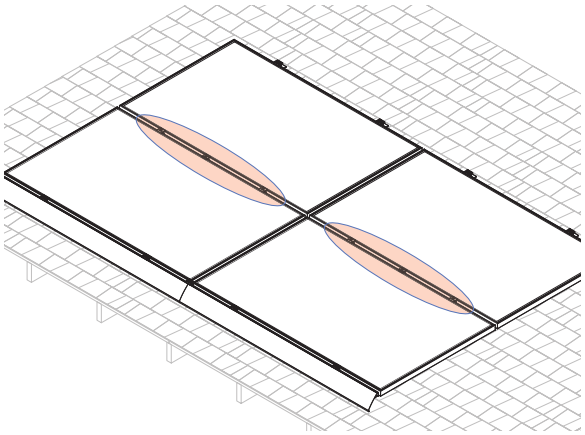

Image note: This four module array is installed in a high load configuration with three attachments per side where two modules share attachments. See highlighted area. As shown, three attachments are never required at the skirt or the top of the array.

Safety Guidance

- **Always wear appropriate OSHA approved safety equipment when at active construction site.**
- **Appropriate fall protection or prevention gear should be used. Always use extreme caution when near the edge of a roof.**
- **Use appropriate ladder safety equipment when accessing the roof from ground level.**

Safety Guidance Continued

- **Safety equipment should be checked periodically for wear and quality issues.**
- **Always wear proper eye protection when required.**

TopSpeed™ Mount to Module Frame Installation

snapnrack.com

Required Tools

- Socket Wrench/Impact Driver
- Torque Wrench
- 1/2" Socket

Materials Included - TopSpeed™ System with SpeedSeal™ Technology

1. (1) SnapNrack TopSpeed™ Mount
2. (4) SnapNrack #14 Wood Screw with 1/2" Hex Head & sealing washer

Best Practice:

Attach all TopSpeed™ mounts as the modules are being prepped with MLPEs on the ground. Attach Mounts before attaching MLPEs to simplify wire management.

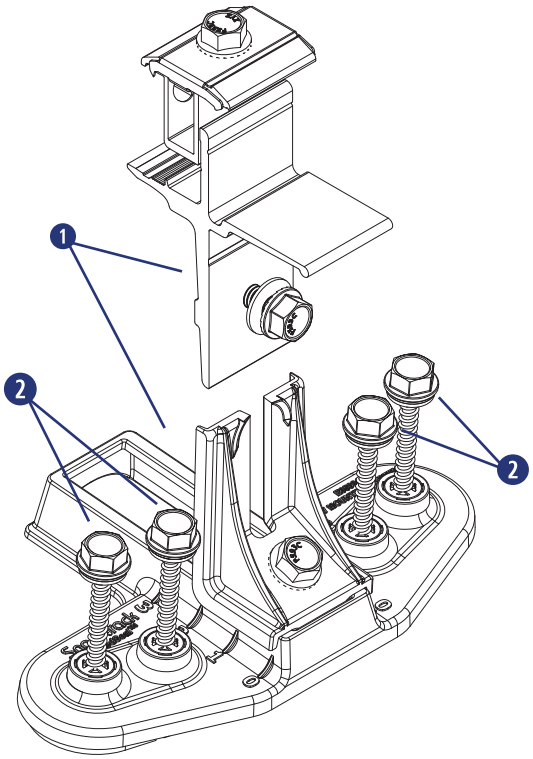

INSTALLATION INSTRUCTIONS

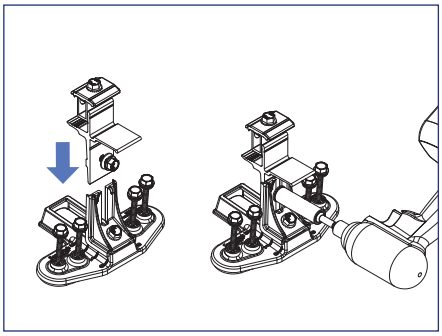

1) Assemble all TopSpeed™ Mounts required for the installation. Slide the clamp tower assembly into the angle bracket riser and tighten the leveling bolt to 16 ft-lbs.

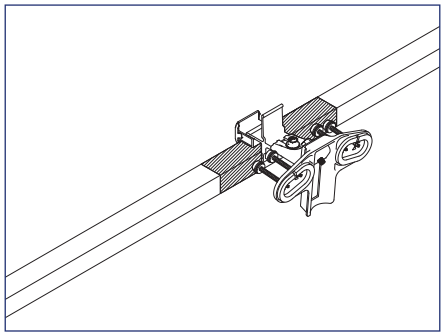

2) Position TopSpeed™ Mount clamp on the module frame within the module manufacturers required clamping zone.

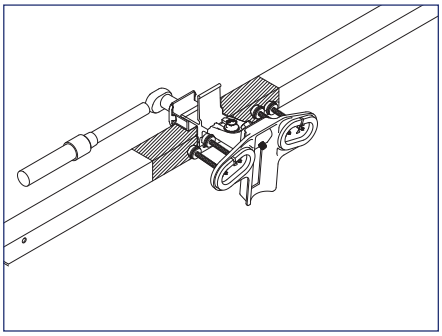

3) Tighten 1/2" clamping bolt to 16 ft-lb. Only two Mounts are required per module on one side.

Install Note:

For high load conditions add a third attachment in the middle of the module frame.

TopSpeed™ Universal Skirt Layout

snapnrack.com

Required Tools

- Roof Marking Crayon or Chalk
- Tape Measure

LAYOUT INSTRUCTIONS

1) Use a tape measure to verify that all modules will fit properly on the roof surface.

2) On the roof draw the layout for the skirt installation including module gaps (recommended 0.75 inch gap), bottom corners, and locations of the two TopSpeed™ attachments per module that clamp to the skirt. Three attachments per module is never required at the skirt.

Install Note:
If environmental load conditions require three TopSpeed™ attachments per module side this is only required when modules share attachments.

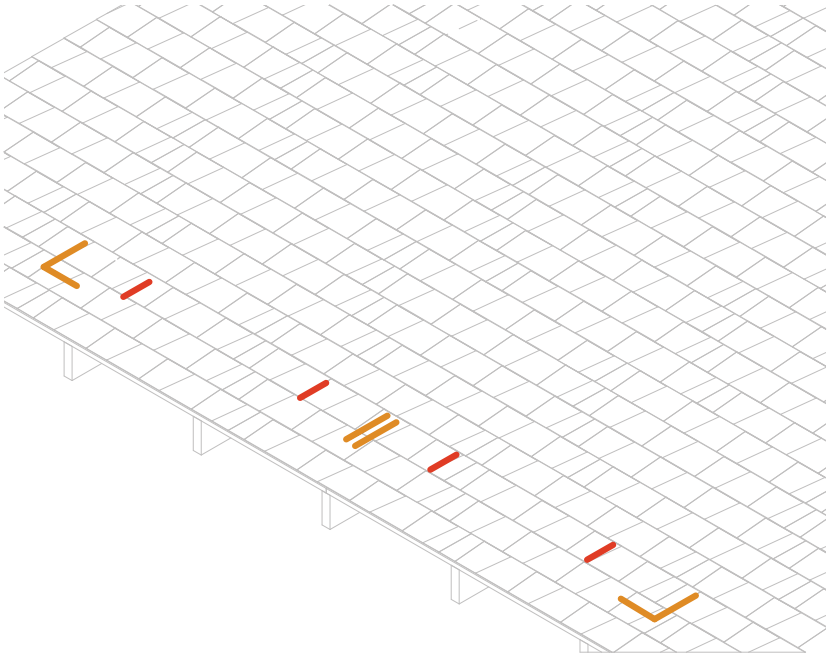

TopSpeed™ Mount: Skirt Installation

snapnrack.com

Required Tools

- Socket Wrench/Impact Driver
- Torque Wrench
- 1/2" Socket
- Roofing sealant

Materials Included - TopSpeed™ Mount with SpeedSeal™ Technology

1. (1) TopSpeed™ Mount
2. (1) TopSpeed™ Clamp
3. (1) Universal Skirt
4. (1) Universal Skirt Spacers
5. (1) *OPTIONAL* - Universal Link

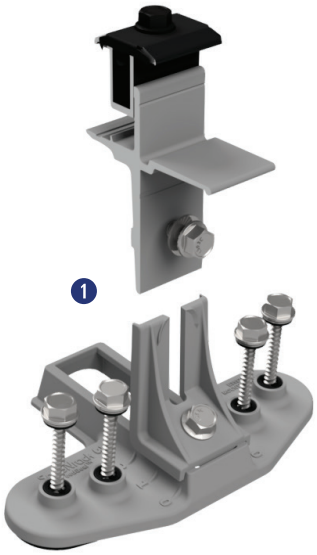

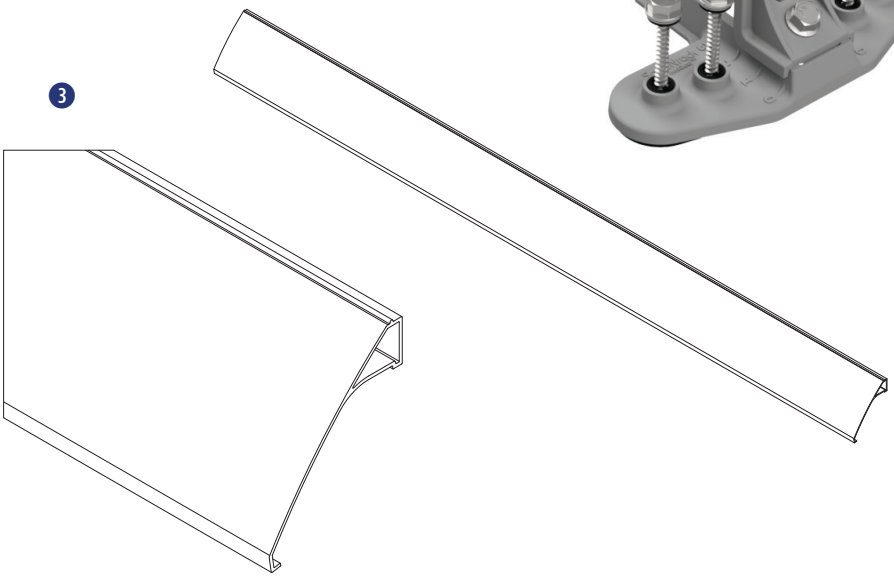

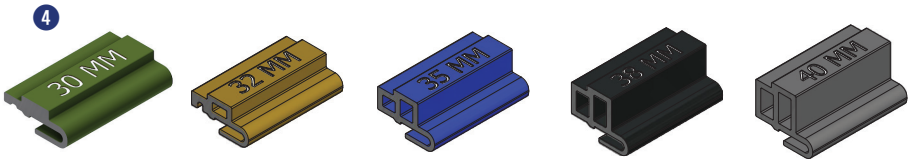

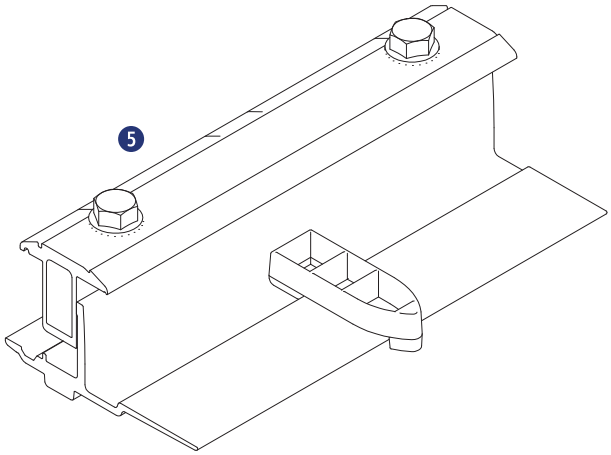

TopSpeed™ Mount Skirt Installation

INSTALLATION INSTRUCTIONS

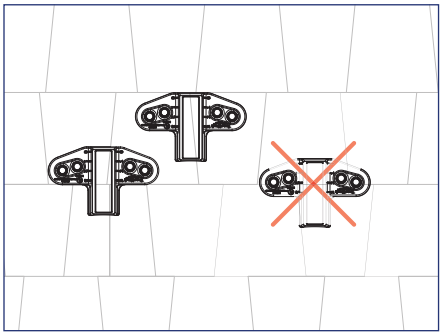

1) Install TopSpeed™ Mounts at locations drawn during the skirt layout. Mounts must be installed entirely on one course of composition.

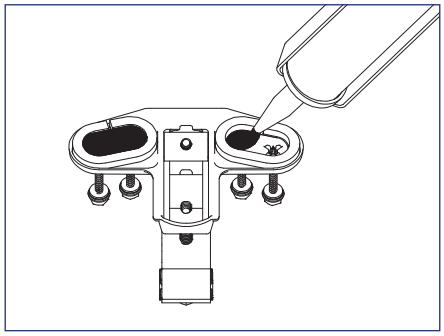

2) Fill both cavities on bottom of TopSpeed™ Mount created by SpeedSeal™ gasket with roof sealant to ensure a watertight seal.

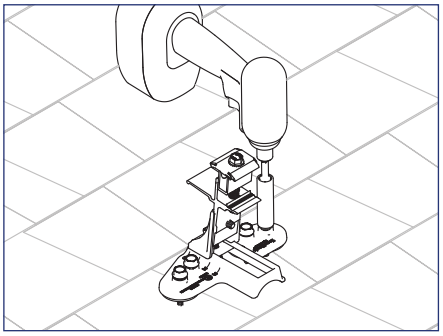

3) Attach TopSpeed™ Mount to roof using the (4) SnapNrack #14 Wood Screws with 1/2″ hex head that are captured in the Mount.

Install Note:

Roof sealant should be expelled from both vents of the TopSpeed™ Mount as it is installed to assure the proper amount of roof sealant has been applied. If sealant is not expelled from all four vents, remove TopSpeed™ Mount, add more sealant to the cavity, then reinstall.

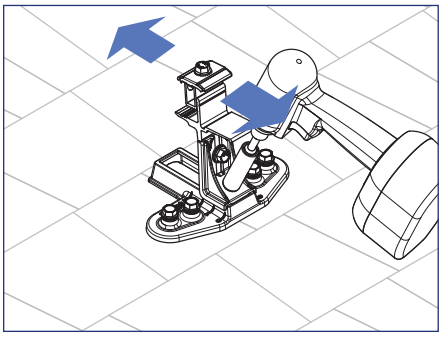

4) Loosen Course Adjustment bolt and adjust end Mounts up or down until aligned with bottom edge of array as marked on the roof, then tighten the Course Adjustment bolt.

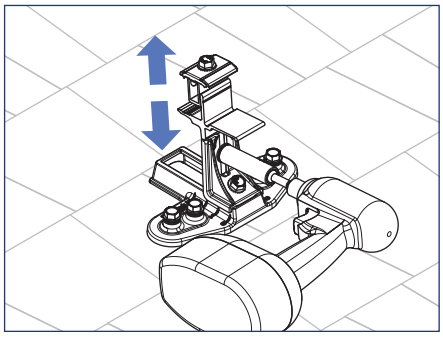

5) To set the TopSpeed™ Mount level loosen the Leveling bolt and move the clamp up or down, then tighten the Leveling bolt and torque to 16 ft-lb.

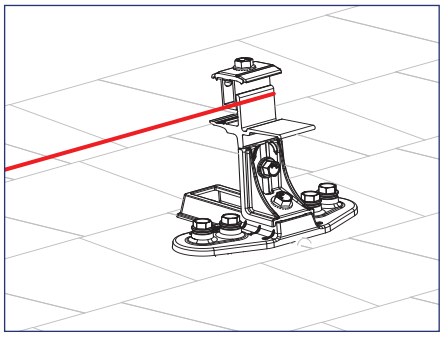

6) Pull string line tight from one corner mount to opposite corner mount to align and level all TopSpeed™ Mounts between the end mounts.

Install Note:

Use the string line alignment feature on Mounts to level and align the Mounts.

INSTALLATION INSTRUCTIONS

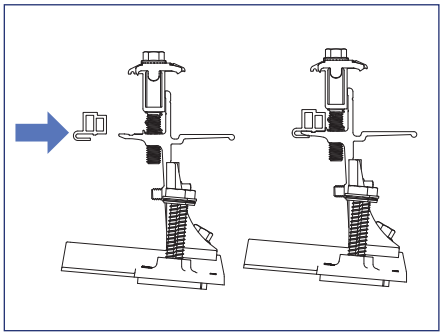

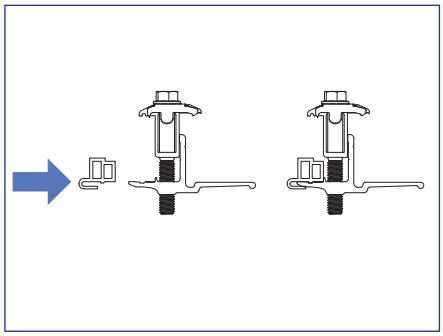

7) Universal Spacers will need to be added to Mounts and Clamps where Skirt will be installed.

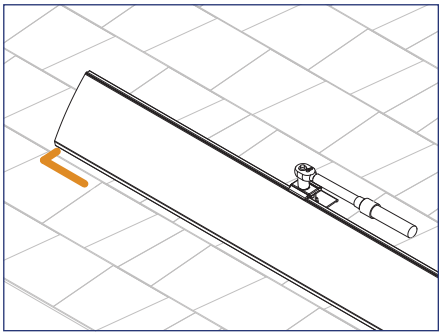

8) Install Universal Skirt by holding the skirt in Mount, sliding Skirt to align with array layout marks, and clamping skirt into mount.

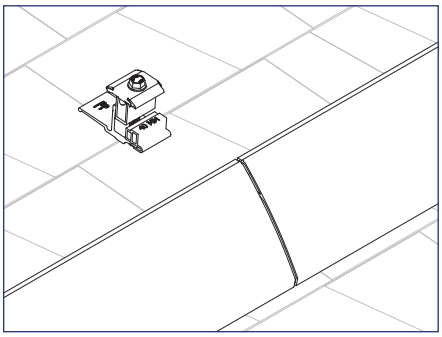

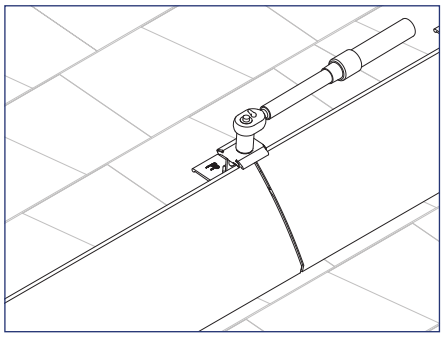

9) Use TopSpeed™ Clamps to connect multiple lengths of Array Skirt.

Install Note:

Optionally use Universal Links to connect lengths of Array Skirt.

Wire Management

Required Tools

- Socket Wrench
- Torque Wrench
- 1/2” Socket
- Electrician Tools

Materials Included

Smart Clips

1. (1) Smart Clip [(2) PV Wire, (1) Enphase IQ Cable]
2. (1) Smart Clip XL [(6) PV Wire, (4) Enphase IQ]
3. (1) Wire Saver [(1) PV Wire]

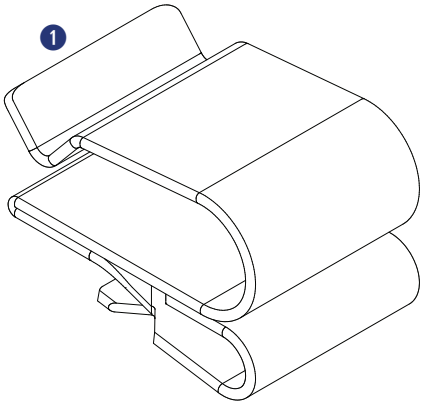

Smart Clip

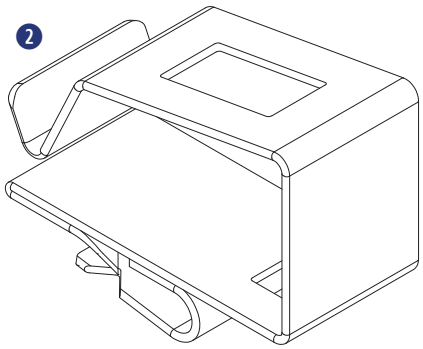

Smart Clip XL

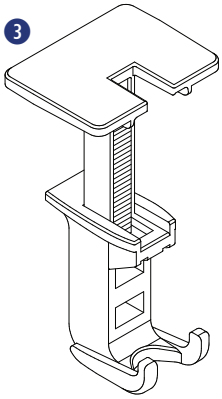

Wire Saver

INSTALLATION INSTRUCTIONS - GROUND LUG

The SnapNrack Ground Lug to be used in accordance with the National Electric Code, ANSI/NFPA 70.

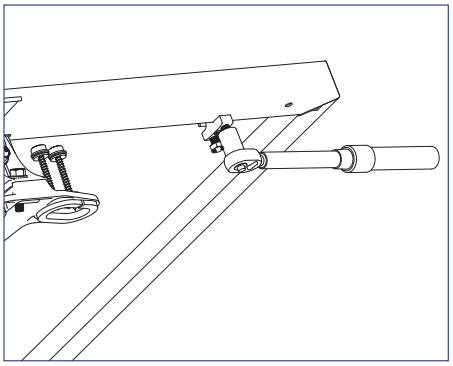

1) Ground Lug (242-92202) can be attached anywhere along the module frame or any TopSpeed™ Mount near the Junction Box. Torque module clamping bolt to 8 ft-lb.

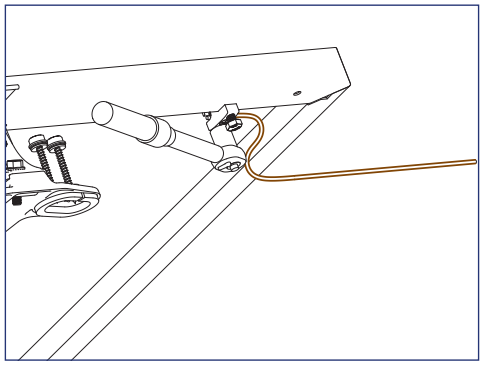

2) Run 10 – 6 AWG, solid, bare copper GEC into Ground Lug channel, torque wire clamping bolt to 8 ft-lb.

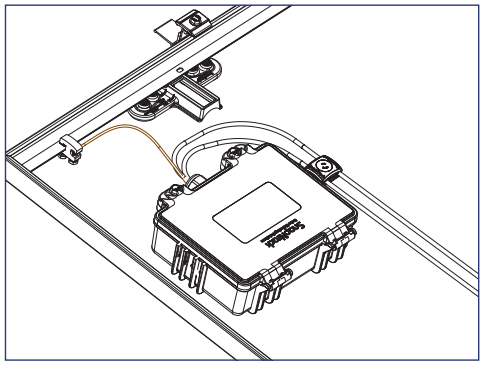

3) Run bare, solid EGC from Ground Lug R to Junction Box, bond bare EGC to stranded EGC in Junction Box. For details on installing the Junction Box reference the **Junction Box Installation Manual.**

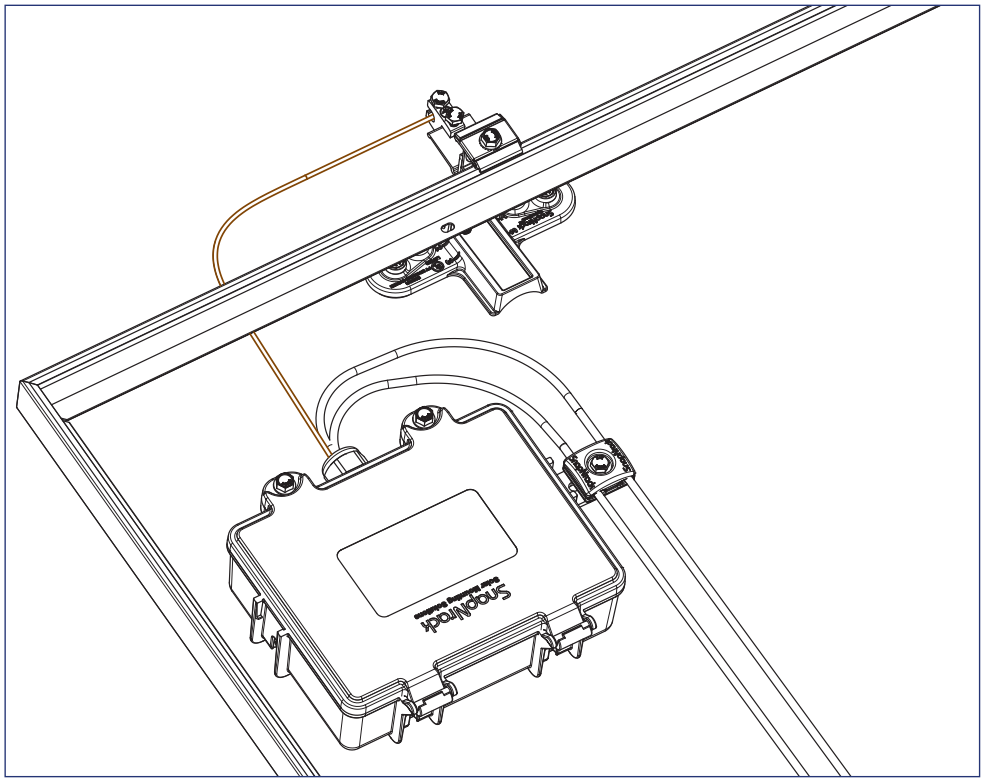

4) Optionally; Install Ground Lug on the Mount Landing Pad at the top of the array. Run bare copper between ground lug and Junction Box.

INSTALLATION INSTRUCTIONS - SMART CLIPS

SmartClip and SmartClip XL should be used to route conductors in a neat and workmanlike manner away from all non-bonded components and support the conductors adequately to eliminate potential damage.

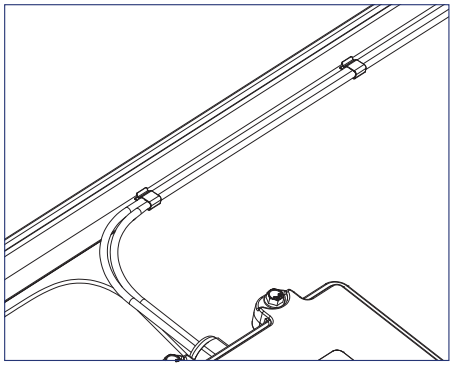

1) Use SnapNrack Smart Clip II to manage up two PV wires inside the module frame while prepping out the modules on the ground or installing modules on the roof.

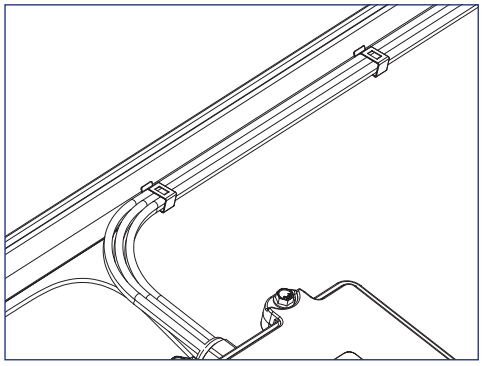

2) Use SnapNrack Smart Clip XL to manage larger bundles of PV wire; up to 6 PV wires per clip

Required Tools

- Socket Wrench
- Torque Wrench
- 1/2” Socket

Materials Included - MLPE Rail Attachment Kit

1. (1) SnapNrack MLPE Frame Attachment Top
2. (1) SnapNrack MLPE Frame Attachment Bottom
3. (1) 5/16”-18 X 3/4” Serrated Flange Bolt SS
4. (1) SnapNrack Smart Clip
5. (1) SnapNrack MLPE Frame Attachment Coil Spring SS

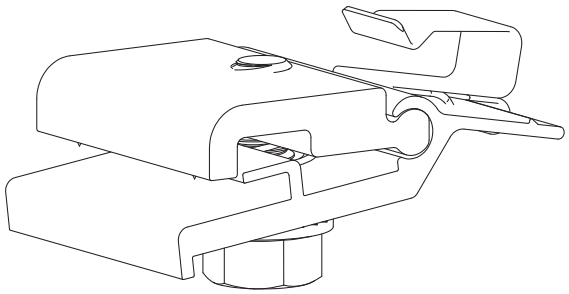

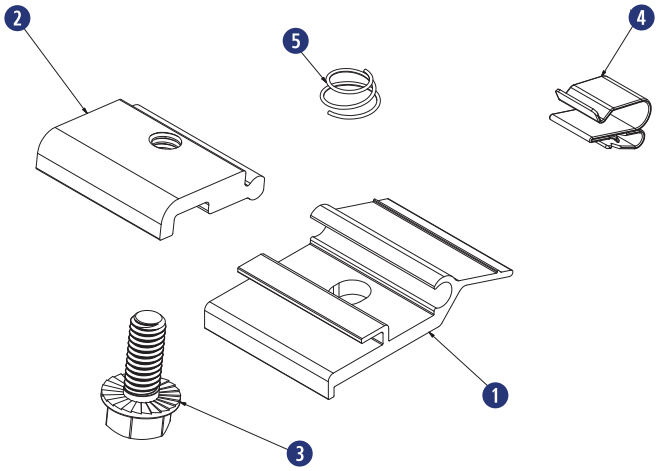

Materials Included

SolarEdge Frame Mount

1. (1) SolarEdge Optimizer w/ Frame-Mounted Module Add-On

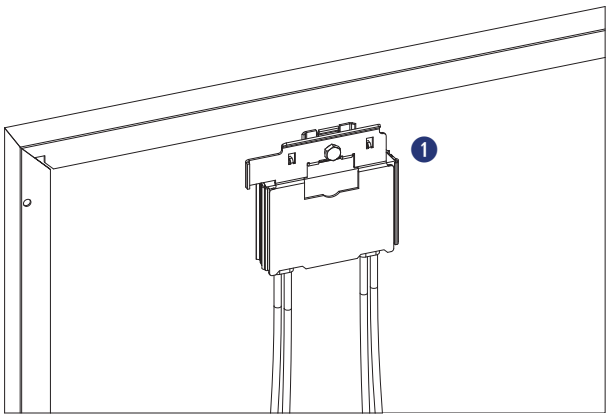

Enphase Frame Mount

1. (1) Enphase Microinverter
2. (1) Enphase Frame Mount

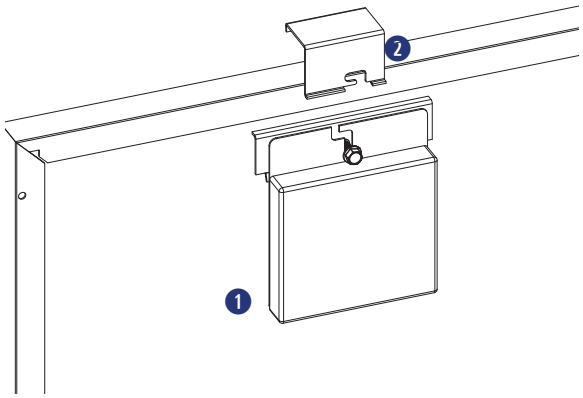

INSTALLATION INSTRUCTIONS - SNAPNRACK MLPE FRAME ATTACHMENT KIT

SnapNrack MLPE Frame Attachment kit are used to attach module level performance enhancing devices, and other devices such an SRD (rapid shutdown device), directly to module frames, and provide integrated grounding/bonding for Devices grounded through metal back plate. (Refer to the list of tested MLPE devices on page XX of this manual).

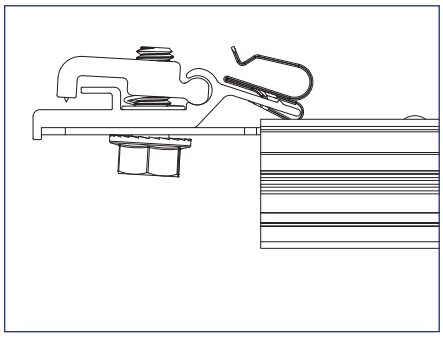

1) Slide the backplate channel of the MLPE device under the MLPE Frame Attachment Kit bolt. The MLPE mounting plate should rest against the MLPE mounting plate backstop on the MLPE Frame Attachment Kit.

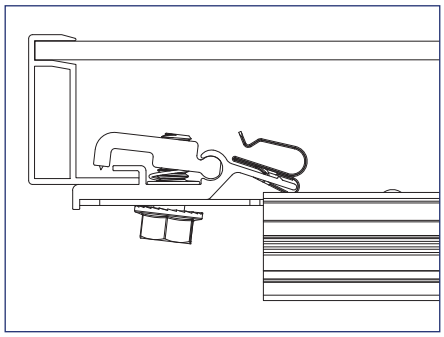

2) Position the MLPE Frame Attachment Kit on the module frame flange in a location that will not interfere with mounting system components. The module frame flange should rest against the module flange backstop on the MLPE Frame Attachment Kit.

Install Note:

Avoid blocking module frame drainage holes when installing the MLPE Frame Attachment Kit.

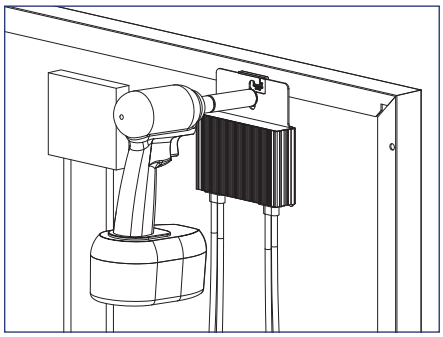

3) Tighten the mounting bolt on the MLPE Frame Attachment Kit to 12 lb-ft (144 lb-in).

Install Note:

The MLPE Frame Attachment Kit bonds the following components: Module Frame, MLPE backplate and Smart Clip.

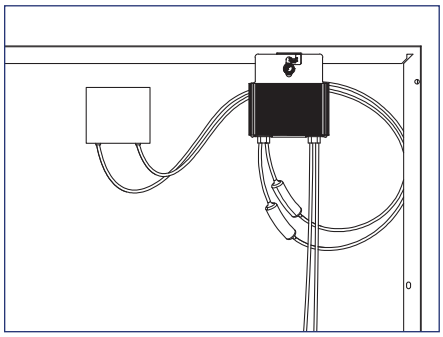

4) Connect the module leads to the input connectors on the MLPE device and manage conductors with the integrated Smart Clip.

INSTALLATION INSTRUCTIONS - SOLAREDGE FRAME MOUNT

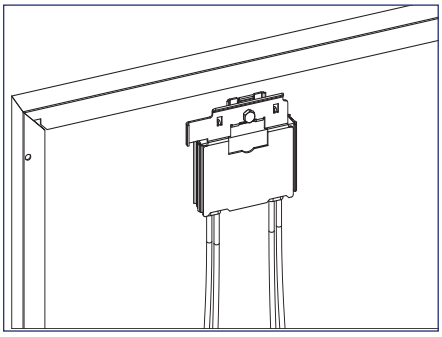

1) Locate the SolarEdge optimizer with Frame-Mounted Module Add-On at a location on the module frame that will not interfere with the TopSpeed™ Mounts.

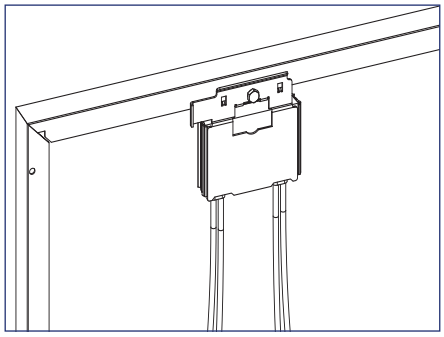

2) Install the optimizer mounting plate onto the module frame and tighten hardware to 11 ft-lbs.

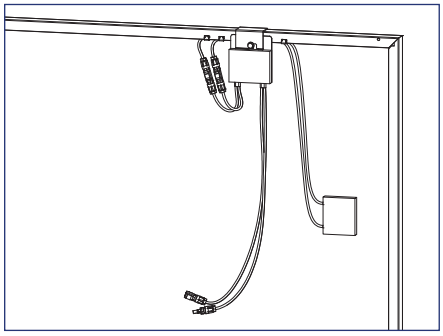

3) Connect the module leads to the input connectors on the optimizer and manage conductors with SnapNrack Smart Clips.

Install Note:

If module is mounted in portrait, install MLPE on long side, short side for landscape.

INSTALLATION INSTRUCTIONS - ENPHASE FRAME MOUNT

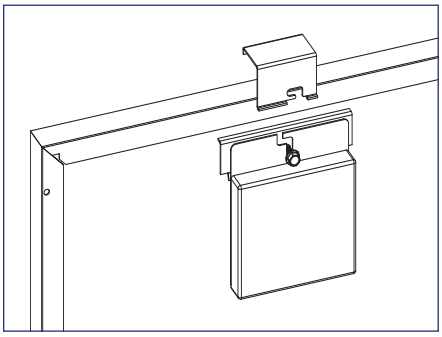

1) Locate the Enphase Frame Mount bracket clamp at a location on the module frame that will not interfere with the TopSpeed™ Mounts.

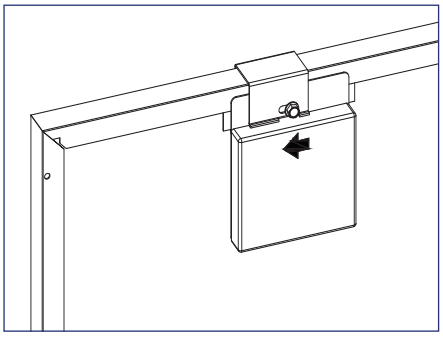

2) Slide the microinverter unit onto the bracket clamp, then move it slightly to the left.

Install Note:

The microinverter mounting flange should be on the outside of the module frame.

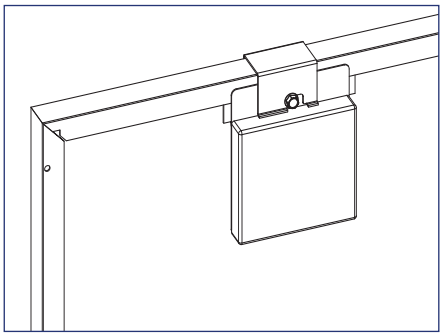

3) Tighten the hardware to 13 ft-lbs.

4) Connect module leads to microinverter DC connectors.

Install Note:

Refer to the Enphase Frame Mount installation guide for additional instructions.

Module Installation

Required Tools

- Socket Wrench
- Torque Wrench
- 1/2" Socket
- Roofing Sealant

Materials Included

1. SnapNrack TopSpeed™ Mount
2. SnapNrack TopSpeed™ Clamp

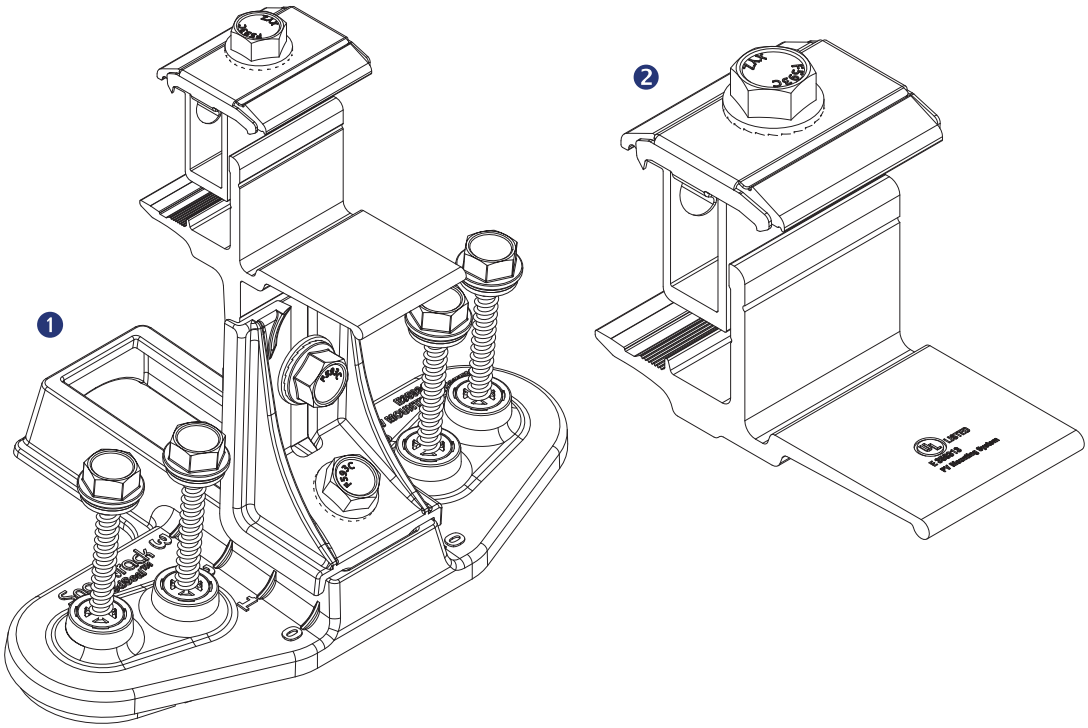

Other Materials Required

② **SnapNrack Smart Clip (2-5 per module)**
See Wire Management section for details

③ **SnapNrack Smart Clip XL (10-20 per array)**
See Wire Management section for details

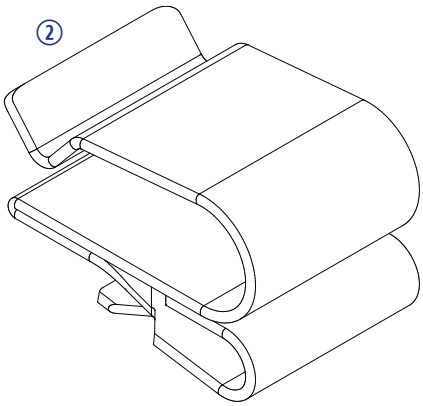

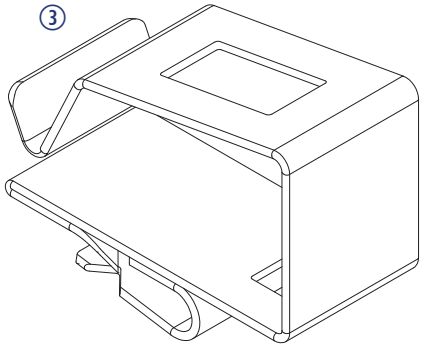

INSTALLATION INSTRUCTIONS - BOTTOM ROW

Recommended Best Practice:

Attach all TopSpeed™ mounts as the modules are being prepped with MLPEs on the ground. Attach Mounts before attaching MLPEs to simplify wire management.

Install Note:

It is recommended that module leads and connectors are prepared for installation using SnapNrack Smart Clips before being brought to the rooftop.

- With no MLPE, secure module leads to module frame to allow access to connectors while modules are installed
- Secure MLPE device to module frame with SnapNrack MLPE Frame Attachment Kit and connect module leads to MLPE, and manage leads by positioning connectors to allow access during installation

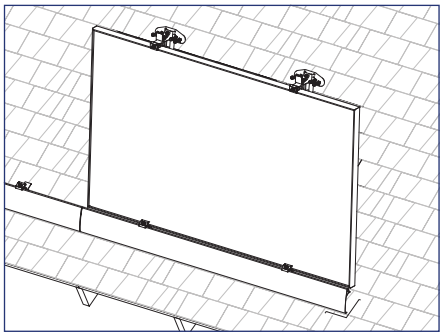

1) Rest downslope edge of module on the Mounts and/or Clamps position module so side edge is flush with marked edge of array layout or Skirt.

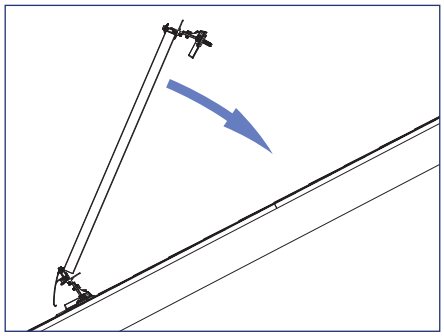

2) Lower upslope edge of module while simultaneously applying slight pressure to seat module into Mounts and/or Clamps.

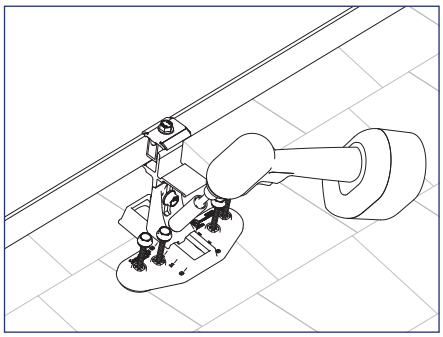

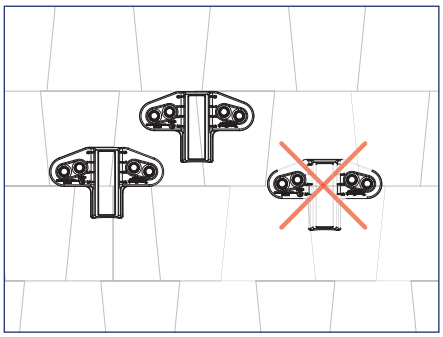

3) When module is level with roof verify the Speedseal™ portion of the TopSpeed™ Mounts are positioned entirely on one course of composition. If required listen the 1/2″ nut and adjust the base as needed then tighten the bolt.

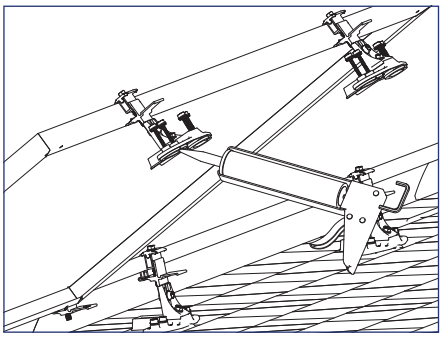

4) Lift the upslope edge of the module and fill the SpeedSeal™ reservoir with roofing sealant.

Install Note:

Roof sealant should be expelled from both vents of the TopSpeed™ Mount as it is installed to assure the proper amount of roof sealant has been applied. If sealant is not expelled from all four vents, remove TopSpeed™ Mount, add more sealant to the cavity, then reinstall.

INSTALLATION INSTRUCTIONS - BOTTOM ROW

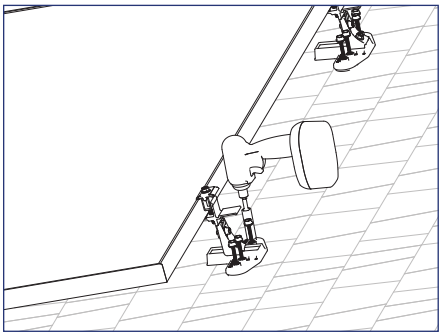

5) Lower the module to the roof and drive the (4) pre installed Snapnrack #14 Wood Screws with 1/2" hex head into the roof sheathing.

Install Note:

Roof sealant should be expelled from both vents of the TopSpeed™ Mount as it is installed to assure the proper amount of roof sealant has been applied. If sealant is not expelled from both vents, remove TopSpeed™ Mount, add more sealant to the cavity, then reinstall.

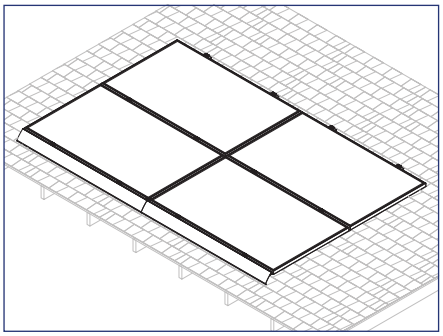

6) Repeat steps 1 through 5 for additional modules in the array.

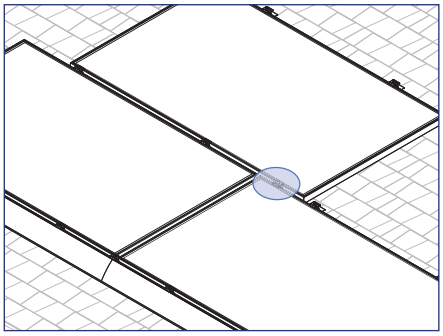

7) For staggered arrays and arrays with mixed orientation, use the TopSpeed™ Clamp as needed to support the modules.

When installing a TopSpeed™ Clamp for support of an over cantilevered module, the clamp shall be installed 2-6" from the edge of the upslope (cantilevered) module.

Grounding Specifications

GROUND PATH DETAILS

All TopSpeed™ components in the fault current ground path have been Certified to be used multiple times for grounding/bonding. The UL 2703 Listing does not specify a maximum number of uses for the Mount, Link, or Ground Lug. Review the requirements of the National Electrical Code (NEC) Article 250 to select the appropriate Equipment Grounding Conductor size based on the short-circuit current of the PV system.

When using Ground Lug R the following components are part of the fault current ground path:

- SnapNrack, TopSpeed™ Mount
- SnapNrack, TopSpeed™ Clamp

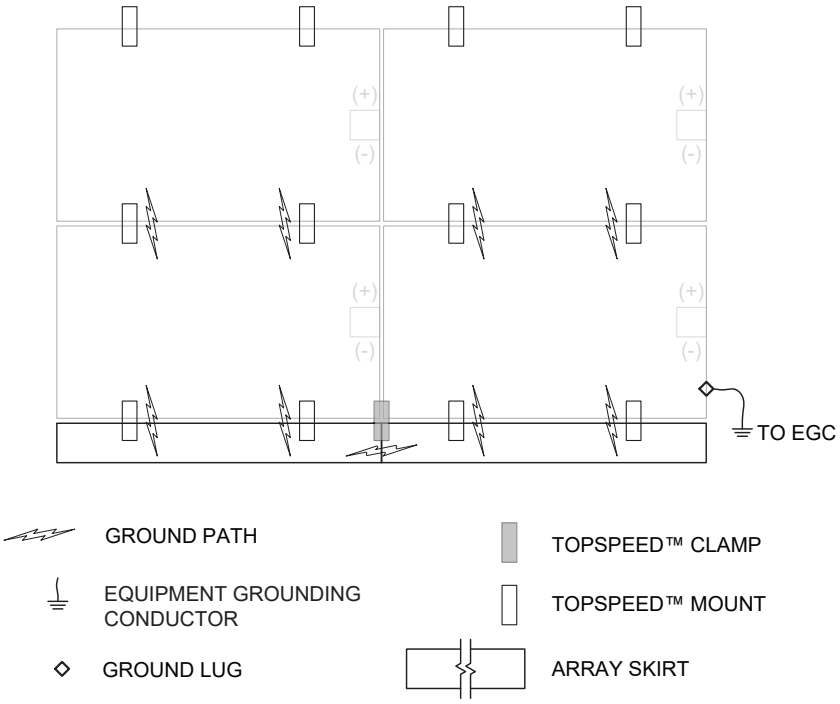

GROUNDING METHOD DETAILS

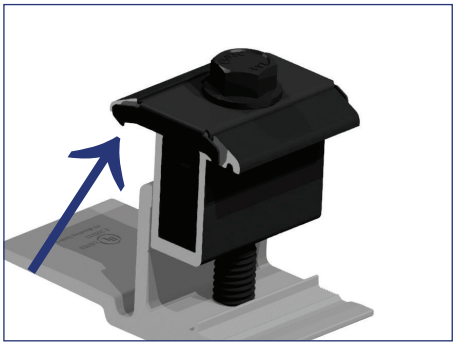

1) Row to row module bonding provided by bonding clips in Mount assembly and Clamp assembly.

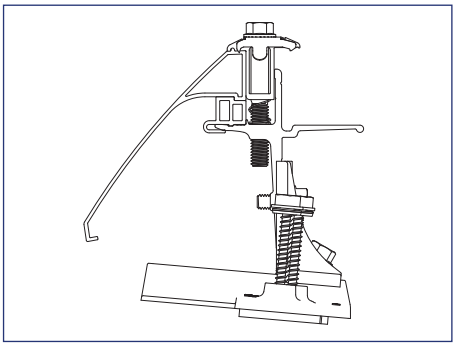

2) Column to column bonding provided by Universal Skirt and bonding clips in the Clamp assembly and/or the RL Universal Link assembly.
Module heights evaluated for bonding with Link Bonding Clamps: 40mm, 38mm, 35mm, 32mm, 30mm

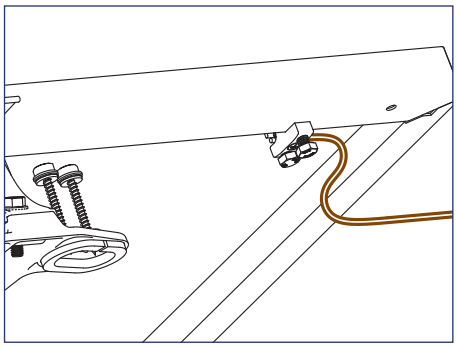

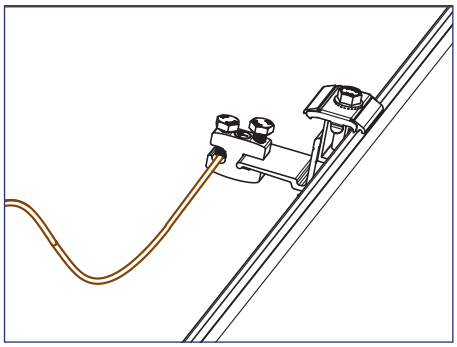

3) Each continuous array is connected to Equipment Grounding Conductor through Ground Lug (242-92202) installed on one module per array.

Optionally; Install Ground Lug on the Mount Landing Pad at the top of the array.

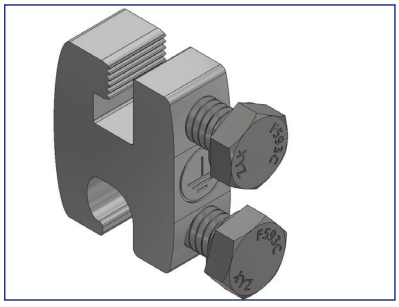

GROUNDING MARKING DETAILS

The Ground Lug is marked with the ground symbol.

Maintaining the Grounding Bonding When Removing a Module

INSTRUCTION FOR MAINTAINING THE GROUNDING BONDING WHEN REMOVING A MODULE FOR SERVICING

CAUTION: Module removal may disrupt the bonding path and could introduce the risk of electric shock. Additional steps may be required to maintain the bonding path. Modules should only be removed by qualified persons in compliance with the instructions in this manual.

Module removal is not presented as a frequently expected occurrence and will not be required as part of routine maintenance.

Scenarios that could result in a disruption of the bonding path are described, for example irregularly-shaped arrays, arrays consisting of individual rows, and any other scenario where module removal could disrupt the bonding path. In most cases, the removal of a module for servicing will not disturb or break grounding continuity. If a module is to be removed that will break continuity, these are the steps that must be taken to maintain a continuously bonded SnapNrack TopSpeed™ System.

Required Tools

- Socket Wrench
- Torque Wrench
- 1/2” Socket
- 7/16” Socket

Required Materials

1. #10 Or Larger Bare Copper Conductor
2. SnapNrack Ground Lug part no. 242-92202
3. Ilsco Part No. SGB-4
4. DnoRaxx Dynobond™

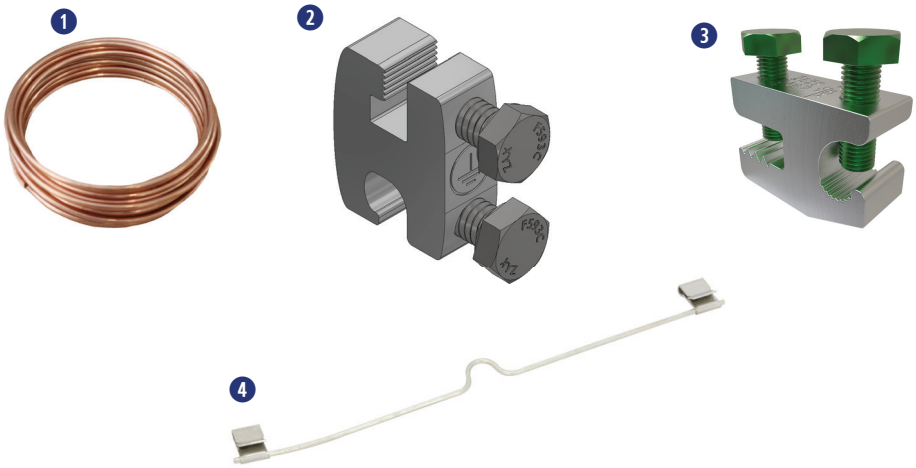

Maintaining the Grounding Bonding When Removing a Module

JUMPER ASSEMBLY INSTRUCTION & INSTALLATION

CAUTION: Do Not Remove the Module until the Jumper is installed

1) Identify the existing ground path at the location of module removal and choose an appropriate length of #10 bare copper to bridge the soon to be broken ground path.

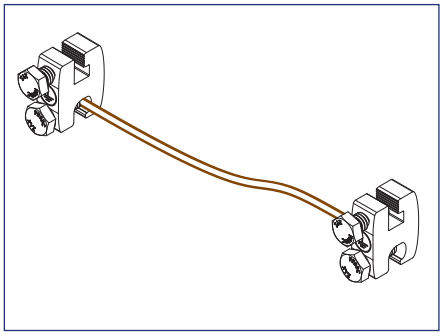

Example of assembled bonding jumper using (2) SnapNrack Ground Lugs

2) Attach one ground lug to each end of #10 bare copper wire. See recommended options below:

1. (2) SnapNrack Ground Lug part no. 242-922022
2. (2) Ilsco part no. SGB-4
3. (1) DroRaxx DynoBond™

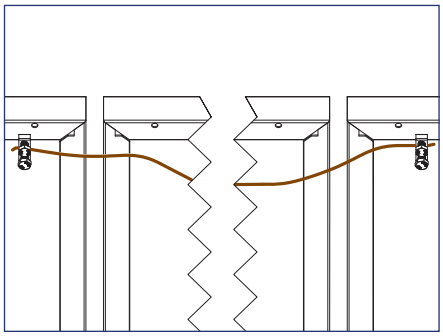

3) Before the module is removed, attach the assembled bonding jumper. Depending on where the module will be removed and choice of ground lug, jumper attachment locations will vary.

- SnapNrack Ground Lug part no. 242-92202 or Ilsco SGB-4 lugs can be attached to module frames or anywhere on the TopSpeed™ Mount.
- DynoRaxx DynoBond™ is approved and appropriate when a short bonding jumper is needed from module to module.

4) Service the array. With the bonding jumper installed, it is now safe to remove the module for service or maintenance.

5) After Servicing the array reinstall the module and original ground path. Only then Remove the bonding jumper.

Caution: Do not remove the bonding jumper until original ground path is established.

Appendix A

APPROVED MODULE & MLPE INFORMATION

SnapNrack TopSpeed™ System has been tested with the following UL Listed module series: The SnapNrack TopSpeed™ System employs top-down clamps and links which have been evaluated for frame-to-system bonding, at specific mounting torques and with the specific module series listed below. All wattage values are covered.

Module manufacturer approval letters can be found at www.snapnrack.com.

Manufacturer	Model	
Aptos Solar	DNA-120-MF23-XXX	DNA-120-BF26-XXXW
	DNA-120-BF23-XXX	DNA-144-BF26-XXXW
	DNA-144-MF23-XXX	DNA-108-BF10-xxxW
	DNA-144-BF23-XXX	DNA-120-BF10-xxxW
	DNA-120-MF26-XXXW	DNA-108-MF10-xxxW
	DNA-144-MF26-XXXW	
Canadian Solar	CS6K-XXX-M	CS1H-XXX-MS
	CS6K-XXX-M-SD	CS1H-XXX-MS-AB
	CS6K-XXX-P	CS3W-XXX-P
	CS6K-XXX-P-SD	CS3N-XXX-MS
	CS6K-XXX-MS	CS1Y-XXX-MS
	CS3K-XXX-P	CS3W-MB-AG
	CS3K-XXX-MS	CS3Y-MB-AG
	CS3U-XXX-MS	CS6W-XXXMB-AG
	CS3U-XXX-P	CS6R-XXXMS-HL
	CS1K-XXX-MS	CS3W-XXX-MS
CertainTeed	CTXXXHC11-06	
Chint Solar	CHSM6612M-XXX	CHSM72M-HC-XXX* (Astro 4)
	CHSM6612M(BL)-XXX	CHSM72M-HC-XXX* (Astro 5)
	CHSM6612M/HV-XXX	
Dehui Solar	DH-M760B-XXXW	DH-M760F-XXXW
	DH-M760W-XXXW	DH-M772F-XXXW
	DH-M772W-XXXW	
Freedom Forever	FF-MP-BBB-xxx	
Hanwha Q Cells	Q.PEAK DUO-G5-XXX	Q.PEAK DUO XL-G10.3/BFG-XXX
	Q.PEAK DUO-BLK-G5-XXX	Q.PEAK DUO G10-XXX
	Q.PLUS DUO-G5-XXX	Q.PEAK DUO BLK G10-XXX
	Q.PEAK DUO-G7-XXX	Q.PEAK DUO G10+-XXX
	Q.PEAK DUO-BLK-G7-XXX	Q.PEAK DUO BLK G10+-XXX
	Q.PEAK DUO-G7.2-XXX	Q.PEAK DUO XL-G10.3-XXX
	Q.PEAK DUO-G6+-XXX	Q.PEAK DUO XL-G10.c-XXX
	Q.PEAK DUO-BLK-G6+-XXX	Q.PEAK DUO XL-G10.d-XXX
	Q.PEAK DUO-G6-XXX	Q.PEAK DUO L-G8.3/BFG-XXX
	Q.PEAK DUO-BLK-G6-XXX	Q.PEAK DUO L-G8.3/BGT-XXX
	Q.PEAK DUO-G8+-XXX	Q.PEAK DUO ML-G10-XXX
	Q.PEAK DUO-BLK-G8+-XXX	Q.PEAK DUO BLK ML-G10+-XXX

Appendix A

Manufacturer	Model	
Hanwha Q Cells	Q.PEAK DUO-G8-XXX	Q.PEAK DUO ML-G10+-XXX
	Q.PEAK DUO-BLK-G8-XXX	Q.PEAK DUO BLK ML-G10-XXX
	Q.PEAK DUO BLK-G6+/AC-XXX	Q.PEAK DUO ML-G10.a+-XXX
	Q.PEAK DUO-ML-G9-XXX	Q.PEAK DUO BLK ML-G10.a+-XXX
	Q.PEAK DUO-BLK-ML-G9-XXX	Q.PEAK DUO ML-G10.a-XXX
	Q.PEAK DUO-BLK-G9-XXX	Q.PEAK DUO BLK ML-G10.a-XXX
	Q.PEAK DUO-BLK-ML-G9+-XXX	Q.PEAK DUO BLK G10+/AC XXX
	Q.PEAK DUO-ML-G9+-XXX	Q.PEAK DUO BLK G10+/HL XXX
	Q.PEAK DUO-BLK-ML-G9+-XXX	Q.PEAK DUO XL-G11.3 XXX
	Q.PEAK DUO XL-G9.2-XXX	Q.PEAK DUO XL-G11.3 BFG XXX
	Q.PEAK DUO XL-G9.3-XXX	Q.TRON-G1+ XXX
	Q.PEAK DUO XL-G9.3/BFG-XXX	Q.TRON BLK-G1+ XXX
	Q.PEAK DUO XL-G10.2-XXX	
HT-SAAE	HT60-166M-XXX	HT60-182M-XXX
Heliene	60M-XXX	72M-XXX
	60P-XXX	72P-XXX
"Hyundai (All may be followed by "BK")"	HiA-SXXXMS	HiS-SXXXYI
	HiS-SXXXXY	HiS-SXXXYH(BK)
Hyperion/Runergy	HY-DH108P8-XXX(Y)	
JA Solar	JAM60S09-XXX/PR	JAM72S10-XXX/PR
	JAM60S10-XXX/MR	JAM72S12-XXX/PR
	JAM60S10-XXX/PR	JAM60S17-XXX/MR
	JAM60S12-XXX/PR	JAM54S30-XXX/MR
	JAM72S09-XXX/PR	JAM54S31-XXX/MR
	JAM72S10-XXX/MR	JAM72D30-XXX/MB
Jinko Solar	JKMXXXM-60	JKMXXXP-72-V
	JKMXXXM-60L	JKMXXXPP-72
	JKMXXXM-60HL	JKMXXXPP-72-V
	JKMXXXM-60HBL	JKMSXXXP-72
	JKMXXXP-60	JKMXXXM-72HL-V
	JKMXXXP-60-J4	JKMXXXM-72HL-TV
	JKMXXXP-60-V	JKMXXXM-72HBL
	JKMXXXP-60B-J4	JKMXXXM-6TL3-B
	JKMXXXPP-60	JKMXXXM-6RL3-B
	JKMXXXPP-60-V	JKMXXXM-7RL3-V
	JKMXXXM-72	JKMXXXM-7RL3-TV
	JKMXXXM-72L-V	JKMXXXM-72HL4-V
	JKMXXXP-72	JKMXXXM-72HL4-TV
LG	LGXXXN1C-A5	LGXXXA1C-V5
	LGXXXN1K-A5	LGXXXM1C-L5
	LGXXXQ1C-A5	LGXXXM1K-L5
	LGXXXQ1K-A5	LGXXXN1C-N5
	LGXXXS1C-A5	LGXXXN1K-L5
	LGXXXN2C-B3	LGXXXN1K-A6
	LGXXXN2W-B3	LGXXXN1C-A6

Appendix A

Manufacturer	Model	
LG	LGXXXN1C-G4	LGXXXN1W-A6
	LGXXXN1K-G4	LGXXXQ1C-A6
	LGXXXS1C-G4	LGXXXQ1K-A6
	LGXXXN2C-G4	LGXXXM1K-A6
	LGXXXN2K-G4	LGXXXM1C-A6
	LGXXXN2W-G4	LGXXXA1C-A6
	LGXXXS2C-G4	LGXXXQAC-A6
	LGXXXS2W-G4	LGXXXQAK-A6
	LGXXXN1C-V5	LGXXXN1K-B6
	LGXXXN1W-V5	LGXXXN2W-E6
	LGXXXN2T-V5	LGXXXN2T-E6
	LGXXXN2T-J5	LGXXXN1K-E6
	LGXXXN1T-V5	LGXXXN3K-V6
Longi	LR6-60-XXXM	LR4-60HPB-XXXM
	LR6-60BK-XXXM	LR4-60HIB-XXXM
	LR6-60HV-XXXM	LR4-60HPH-XXXM
	LR6-60PB-XXXM	LR4-60HIH-XXXM
	LR6-60PE-XXXM	LR6-60HIH-XXXM
	LR6-60PH-XXXM	LR6-60HIB-XXXM
	LR6-60HPB-XXXM	LR4-72HPH-XXXM
	LR6-60HPH-XXXM	
Meyer Burger	Meyer Burger Black*	Meyer Burger White*
mSolar	TXI6-XXX120BB	
Mission Solar	MSEXXXSO5T	MSEXXXSQ4S
	MSEXXXSO5K	MSEXXXSR8K
	MSEXXXSQ5T	MSEXXXSR8T
	MSEXXXSQ5K	MSEXXXSR9S
	MSEXXXMM4J	MSE60AXXX
	MSEXXXMM6J	MSEXXXSX5K
	MSEXXXSO6W	MSEXXXSX5T
	MSEXXXSO4J	MSEXXXSX6S
	MSEXXXSO6J	MSEXXXSX6W
	MSEXXXSQ6S	MSEXXXSX5R
Next Energy Alliance	USNEA-XXXM3-60	USNEA-XXXM3-72
	USNEA-XXXM3B-60	USNEA-XXXM3B-72
Panasonic	VBHNXXXKA03	VBHXXXRA18N
	VBHNXXXKA04	VBHXXXRA03K
	VBHNXXXSA17	EVPVXXX(K)
	VBHNXXXSA18	EVPVXXXH
	VBHN325SA17E	EVPVXXXPK
Phono Solar	PSXXXM-20/U	PSxxxM8GF-18/VH
	PSXXXMH-20/U	PSxxxM8GFH-18/VH
	PSxxxM8GF-24/TH	PSxxxM6-24/TH
	PSxxxM8GFH-24/TH	

Appendix A

Manufacturer	Model	
REC (All may be followed by “BLK” or “BLACK”)	RECXXXTP2	RECXXXTP2SM 72 BLK2
	RECXXXTP2-BLK	RECXXXAA
	RECXXXNP	RECXXXTP3M
	RECXXXTP2M	RECXXXTP4
	RECXXXTP2M 72	RECXXXAA Pure
	RECXXXTP2M 72 BLK	RECXXXAA Pure-R
	RECXXXTP2M 72 BLK2	RECXXXNP2
	RECXXXTP2SM 72	RECXXXNP3
	RECXXXTP2SM 72 BLK	
SEG Solar	SEG-400-BMB-HV	SEG-xxx-BMD-HV
	SEG-400-BMB-TB	SEG-xxx-BMD-TB
Silfab	SLAXXX-M	SILXXXNT
	SLAXXX-P	SILXXXHL
	SSAXXX-M	SILXXXBK
	SSAXXX-P	SILXXXNX
	SILXXXBL	SILXXXNU
	SILXXXML	SILXXXHC
	SILXXXNL	SILXXXHN
	SLGXXX-M	SILXXXBG
	SLGXXX-P	SIL-xxxHC+
	SSGXXX-M	SIL-xxxHM
	SSGXXX-P	
Solaria	Solaria PowerXT-XXXR-PX	Solaria PowerXT-XXXR-PM
	Solaria PowerXT-XXXR-BX	Solaria PowerXT-XXXR-PM-AC
	Solaria PowerXT-XXXR-AC	
Sunpower	SPR-AXXX-G-AC	SPR-MXXX-H-AC
	SPR-AXXX	SPR-MXXX
	SPR-AXXX-BLK-G-AC	SPR-MXXX-BLK-H-AC
	SPR-AXXX-BLK	SPR-MXXX-BLK
SunSpark	SST-XXXM3-60	SST-XXXM3-72
	SST-XXXM3B-60	SST-XXXM3B-72
Talesun	TP660M-XXX	TP672M-XXX
	TP660P-XXX	TP672P-XXX
Trina	TSM-XXXDD05(II)	TSMXXXDD05H.05(II)
	TSM-XXXDD05A.05(II)	TSM-XXXDD06M.05(II)
	TSM-XXXDD05A.08(II)	TSM-XXXDE15H(II)
	TSM-XXXDD05A.082(II)	TSM-XXXDE15M(II)
	TSM-XXXPA05	TSMXXXDE06X.05(II)
	TSM-XXXPA05.05	TSMXXXDE09.05
	TSM-XXXPA05.08	TSM-XXXDE15V(II)
	TSM-XXXPD05	TSM-XXXDEG15VC.20(II)
	TSM-XXXPD05.002	TSM-XXXDEG18MC.20(II)
	TSM-XXXPD05.05	TSM-XXXDEG19C.20

Appendix A

Manufacturer	Model	
Trina	TSM-XXXPD05.05S	TSM-XXXDEG21C.20
	TSM-XXXPD05.08	TSM-XXXDE09C.05
	TSM-XXXPD05.082	TSM-XXXDE09C.07
	TSM-XXXPD05.08D	TSM-xxxNE09RC.05
	TSM-XXXPD05.08S	
Vikram Solar	SOMERA VSMHBB.60.XXX.05	PREXOS VSMDHT.60.XXX.05
	SOMERA VSMH.72.XXX.05	PREXOS VSMDHT.72.XXX.05
VSUN	VSUNXXX-144BMH-DG	VSUNXXX-108BMH
	VSUNXXX-120BMH	
ZNShine	ZXM6-60-XXX/M	ZXM6-NH144-XXXM
	ZXM6-NH120-XXXM	ZXM7-SH108-XXXM

Appendix A

SnapNrack TopSpeed™ has been tested with the following Module Level Power Electronic (MLPE) devices:

SnapNrack TopSpeed™ mounting systems has been tested with the following UL/NRTL Listed Module Level Power Electronic (MLPE) Devices. The back plates of the MLPEs have been evaluated for bonding to TopSpeed™ through the SnapNrack MLPE Frame Attachment Kit, model 242-02151.

MLPE Manufacturer	Model	
AP Smart	RSD-S-PLC	
Celestica International	DG-006-F001201x	DG-006-F001401x
Delta Electronics	GPI00010105	
Enphase	C250	IQ7PLUS-72-2-US
	M215	IQ7PLUS-72-B-US
	M250	IQ8-60
	IQ6-60-2-US	IQ8PLUS-72
	IQ6PLUS-72-2-US	IQ8A-72
	IQ7-60-2-US	IQ8H-208-72
	IQ7-60-B-US	IQ8H-240-72
Generec	S2502	
Ginlong Technologies	Solis-RSD-1G	
	Solis-MLRSD-R1-1G	Solis-MLRSD-R2-1G
SolarEdge	P300-5NC4ARS	P320-5NC4ARS
	P370-5NC4AFS	P400-5NC4AFS
	P320	P340
	P370	P400
	P401	P405
	P485	P505
	P730	P800p
	P850	P860
	P950	P1100
	P1101	S440
	S500	
SMA	RSB-2S-US-10	
Tigo	TS4-R-F	TS4-R-M
	TS4-R-O	TS4-R-S
	TS4-R-M-DUO	TS4-R-O-DUO
	TS4-R-S-DUO	TS4-A-F
	TS4-A-2F	TS4-A-O
	TS4-A-S	

ROOF RIDGE

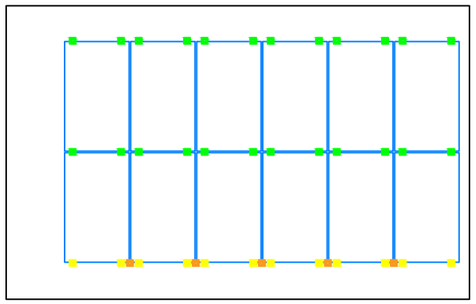

SOLAR PANEL FOOTING PLAN R1

Scale: 1/8" = 1'-0"

ROOF RIDGE

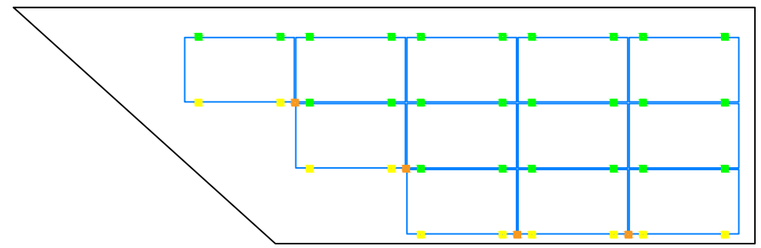

SOLAR PANEL FOOTING PLAN R2

Scale: 1/8" = 1'-0"

ROOF RIDGE

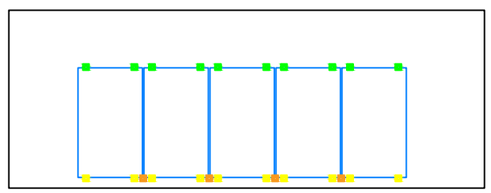

SOLAR PANEL FOOTING PLAN R3

Scale: 1/8" = 1'-0"

KEY

- MOUNTS WITHOUT SPACERS
- MOUNTS WITH SPACERS
- CLAMPS WITHOUT SPACERS
- CLAMPS WITH SPACERS

NOTES:

1. SNAPNRACK TOPSPEED SHALL BE INSTALLED IN ACCORDANCE WITH SNAPNRACK INSTALLATION MANUAL.
2. ADD TOPSPEED CLAMP IF GREATER THAN (SOLAR PANEL LENGTH / 4) FOR LANDSCAPE OR (SOLAR PANEL WIDTH /4) FOR PORTRAIT
3. NO SOLAR PANEL SHALL CANTILEVER MORE THAN 1/4 SOLAR PANEL LENGTH OR WIDTH DEPENDING ON ORIENTATION. UNLESS FOR MANUFACTURER SPECIFIED CLAMPING ZONE

APPROVED

Montgomery County

Historic Preservation Commission

REVIEWED

By Dan.Bruechert at 1:11 pm, May 01, 2024

STATE OF MARYLAND
DAVID C. HERNANDEZ
49993
PROFESSIONAL ENGINEER

DCH Engineering

PROFESSIONAL CERTIFICATION. I HEREBY CERTIFY THAT THESE DOCUMENTS WERE PREPARED OR APPROVED BY ME, AND THAT I AM A DULY LICENSED PROFESSIONAL ENGINEER UNDER THE LAWS OF THE STATE OF MARYLAND, LICENSE NO. 49993, EXP. 10/06/2024.

Sign 04/1/2024

Solar Energy World
Because Tomorrow Matters

Solar Energy World LLC.
14880 Sweitzer Lane
Laurel, MD 20707
(888) 497-3233

Building Code	International Residential Code (IRC) 2018
Electrical Code	National Electrical Code (NEC) 2017
Wind Speed	115 MPH
Snow Load	30 PSF
Modules	(29) SILFAB SIL-410 BG
Inverter(s)	(29) IQ8M-72-2-US
DC System Size	11.890 kW
AC System Size	9.425 kW
Customer Information	John Salmen 16 Montgomery Ave Takoma Park, MD 20912
AHJ	Montgomery County
Utility	Pepco
Sheet Name	Solar Panel Footing Plan
Drawn By	AMP
Date	February 28, 2024
Scale	AS NOTED
Job Number	MD18170
Sheet	S-2

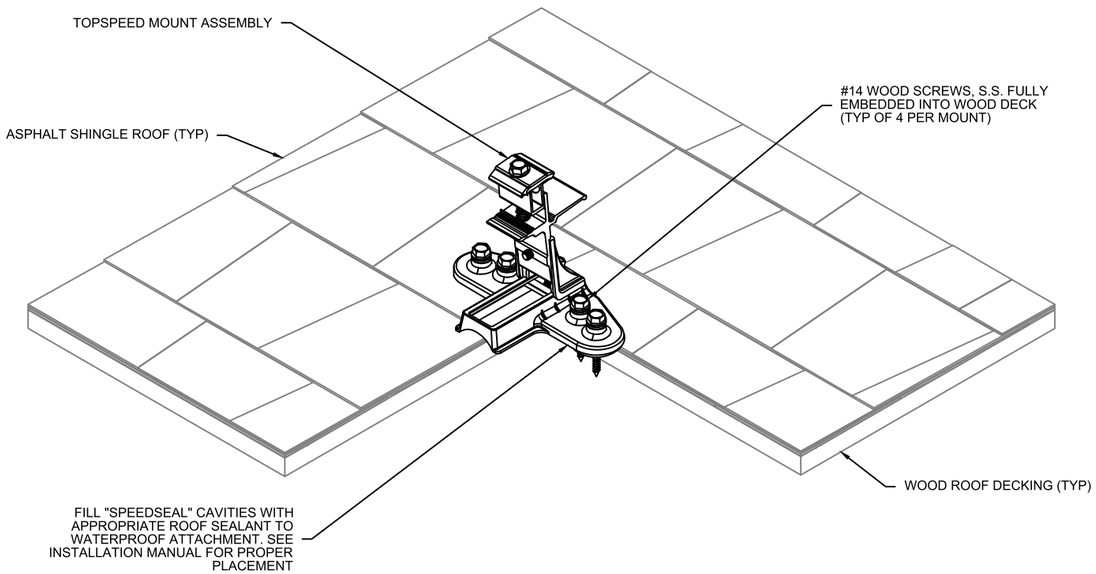

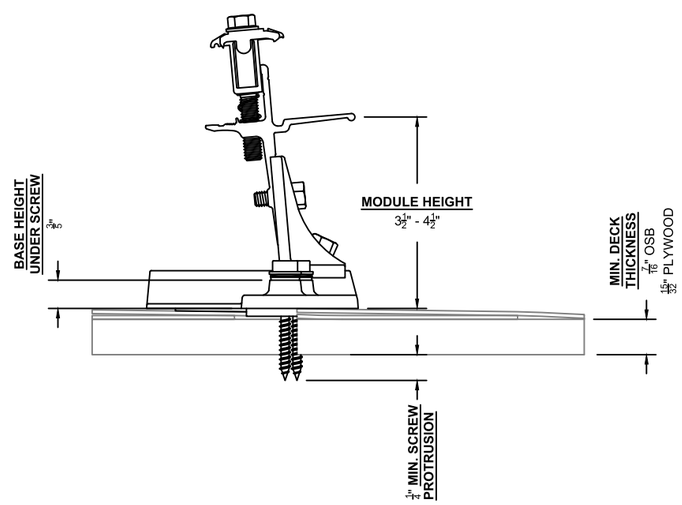

STRUCTURAL ATTACHMENT DETAIL

Structural Details		
S1	Rafter	2x6 O.C. 24"
S2	Rafter	2x8 O.C. 16"

NOTES:

1. ALL WORK SHALL COMPLY WITH REQUIREMENTS OF INTERNATIONAL RESIDENTIAL CODE (IRC 2018), LOADING CODE (ASCE 7-16), WOOD DESIGN CODE (NDS 2015), AND LOCAL REQUIREMENTS.
2. LOAD CRITERIA PER :
   - EXPOSURE CATEGORY "B"
   - GROUND SNOW LOAD, Pg = 30 PSF
   - LATERAL LOAD RISK CATEGORY "II"
   - ULTIMATE DESIGN WIND SPEED = 115 MPH
3. SOLAR PANELS AND RACKING SYSTEMS SHALL BE INSTALLED PER MANUFACTURER'S RECOMMENDATION.
4. FOLLOW ALL LOCAL AND FEDERAL SAFETY REQUIREMENTS.

STATE OF MARYLAND
DAVID C. HERNANDEZ
49993
PROFESSIONAL ENGINEER
DCH ENGINEERS

PROFESSIONAL CERTIFICATION. I HEREBY CERTIFY THAT THESE DOCUMENTS WERE PREPARED OR APPROVED BY ME, AND THAT I AM A DULY LICENSED PROFESSIONAL ENGINEER UNDER THE LAWS OF THE STATE OF MARYLAND, LICENSE NO: 49993, EXP: 10/06/2024.
Sept 04 1974

APPROVED
Montgomery County
Historic Preservation Commission

REVIEWED
By Dan.Bruechert at 1:11 pm, May 01, 2024

Solar Energy World
Because Tomorrow Matters

Solar Energy World LLC.
14880 Sweitzer Lane
Laurel, MD 20707
(888) 497-3233

Building Code: International Residential Code (IRC) 2018
Electrical Code: National Electrical Code (NEC) 2017
Wind Speed: 115 MPH
Snow Load: 30 PSF
Modules: (29) SILFAB SIL-410 BG
Inverter(s): (29) IQ8M-72-2-US
DC System Size: 11.890 kW
AC System Size: 9.425 kW
Customer Information: John Salmen
16 Montgomery Ave
Takoma Park, MD 20912
AHJ: Montgomery County
Utility: Pepco
Sheet Name: Structural Attachment Details
Drawn By: AMP
Date: February 28, 2024
Scale: AS NOTED
Job Number: MD18170
Sheet: S-1

ENPHASE

DATA SHEET

IQ8M and IQ8A Microinverters

Our newest IQ8 Microinverters are the industry's first microgrid-forming, software defined microinverters with split-phase power conversion capability to convert DC power to AC power efficiently. The brain of the semiconductor-based microinverter is our proprietary application specific integrated circuit (ASIC) which enables the microinverter to operate in grid-tied or off-grid modes. This chip is built in advanced 55nm technology with high speed digital logic and has superfast response times to changing loads and grid events, alleviating constraints on battery sizing for home energy systems.

Part of the Enphase Energy System, IQ8 Series Microinverters integrate with the IQ Battery, IQ Gateway, and the Enphase App monitoring and analysis software.

Enphase 25 year limited warranty

IQ8 Series Microinverters redefine reliability standards with more than one million cumulative hours of power-on testing, enabling an industry-leading limited warranty of up to 25 years.

Connect PV modules quickly and easily to IQ8 Series Microinverters using the included Q-DCC-2 adapter cable with plug-n-play MC4 connectors.

UL CERTIFIED SAFETY

IQ8 Series Microinverters are UL listed as PV Rapid Shutdown Equipment and conform with various regulations, when installed according to manufacturer's instructions.

Easy to install

- Lightweight and compact with plug-n-play connectors
- Power Line Communication (PLC) between components
- Faster installation with simple two-wire cabling

High productivity and reliability

- Produce power even when the grid is down*
- More than one million cumulative hours of testing
- Class II double-insulated enclosure
- Optimized for the latest high-powered PV modules

Microgrid-forming

- Complies with the latest advanced grid support**
- Remote automatic updates for the

ange

d IEEE

with
s (IQ7

APPROVED

Montgomery County

Historic Preservation Commission

REVIEWED

By Dan.Bruechert at 1:11 pm, May 01, 2024

*Only when installed with IQ Sys
**IQ8M and IQ8A support split-phase, 240V installations only.

IQ8M and IQ8A Microinverters

INPUT DATA (DC)		IQ8M-72-2-US	IQ8A-72-2-US
Commonly used module pairings[1]	W	260 – 460	295 – 500
Module compatibility		54-cell / 108 half-cell, 60-cell / 120 half-cell, 66-cell / 132 half-cell and 72-cell / 144 half-cell	
MPPT voltage range	V	30 – 45	32 – 45
Operating range	V	16 – 58	
Min. / Max. start voltage	V	22 / 58	
Max. input DC voltage	V	60	
Max. continuous input DC current	A	12	
Max. input DC short-circuit current	A	25	
Max. module I_{sc}	A	20	
Overvoltage class DC port		II	
DC port backfeed current	mA	0	
PV array configuration		1 x 1 Ungrounded array; No additional DC side protection required; AC side protection requires max 20A per branch circuit	
OUTPUT DATA (AC)		**IQ8M-72-2-US**	**IQ8A-72-2-US**
Peak output power	VA	330	366
Max. continuous output power	VA	325	349
Nominal (L-L) voltage / range[2]	V	240 / 211 – 264	
Max. continuous output current	A	1.35	1.45
Nominal frequency	Hz	60	
Extended frequency range	Hz	47 – 68	
AC short circuit fault current over 3 cycles	Arms	2	
Max. units per 20 A (L-L) branch circuit[3]		11	
Total harmonic distortion		<5%	
Overvoltage class AC port		III	
AC port backfeed current	mA	30	
Power factor setting		1.0	
Grid-tied power factor (adjustable)		0.85 leading – 0.85 lagging	
Peak efficiency	%	97.8	97.7
CEC weighted efficiency	%	97.5	97
Night-time power consumption	mW	60	
MECHANICAL DATA			
Ambient temperature range		-40°C to +60°C (-40°F to +140°F)	
Relative humidity range		4% to 100% (condensing)	
DC Connector type		MC4	
Dimensions (H x W x D)		212 mm (8.3”) x 175 mm (6.9”) x 30.2 mm (1.2”)	
Weight		1.08 kg (2.38 lbs)	
Cooling		Natural convection – no fans	
Approved for wet locations		Yes	
Pollution degree		PD3	
Enclosure		Class II double-insulated, corrosion resistant polymeric enclosure	
Environ. category / UV exposure rating		NEMA Type 6 / outdoor	
COMPLIANCE			
Certifications		CA Rule 21 (UL 1741-SA), UL 62109-1, IEEE 1547:2018 (UL 1741-SB 3rd Ed.), FCC Part 15 Class B, ICES-0003 Class B, CAN / CSA-C22.2 NO. 107.1-01 This product is UL Listed as PV Rapid Shutdown Equipment and conforms with NEC 2014, NEC 2017, and NEC 2020 section 690.12 and C22.1-2018 Rule 64-218 Rapid Shutdown of PV Systems, for AC and DC conductors, when installed according to manufacturer’s instructions.	

(1) Pairing PV modules with wattage above the limit may result in additional clipping losses. See the compatibility calculator at https://link.enphase.com/module-compatibility. (2) Nominal voltage range can be extended beyond nominal if required by the utility.
(3) Limits may vary. Refer to local requirements to define the number of microinverters per branch in your area.

SILFAB ELITE

SIL - 410 BG

SILFAB SOLAR®

APPROVED

Montgomery County

Historic Preservation Commission

REVIEWED

By Dan.Bruechert at 1:11 pm, May 01, 2024

NOT JUST ANOTHER SOLAR PANEL.

Silfab Elite

Back-contact technology with an innovative conductive backsheet and integrated cell design delivers the highest performance, durability and beautiful aesthetics.

Manufactured exclusively in the United States.

SILFABSOLAR.COM

Intertek Intertek IEC Fraunhofer ISE CHUBB

* Chubb provides error and omission insurance to Silfab Solar Inc.

ELECTRICAL SPECIFICATIONS		410	
Test Conditions		STC	NOCT
Module Power (Pmax)	Wp	410	305
Maximum power voltage (Vpmax)	V	38.07	35.35
Maximum power current (Ipmax)	A	10.77	8.64
Open circuit voltage (Voc)	V	45.92	42.14
Short circuit current (Isc)	A	11.30	9.16
Module efficiency	%	21.4%	19.9%
Maximum system voltage (VDC)	V	1000	
Series fuse rating	A	20	
Power Tolerance	Wp	0 to +10	

Measurement conditions: STC 1000 W/m2 • AM 1.5 • Temperature 25 °C • NOCT 800 W/m^2 • AM 1.5 • Measurement uncertainty ≤ 3%
Sun simulator calibration reference modules from Fraunhofer Institute. Electrical characteristics may vary by ±5% and power by 0 to +10W.

MECHANICAL PROPERTIES / COMPONENTS	METRIC	IMPERIAL
Module weight	20.8±0.2	45.8±0.4 lbs
Dimensions (H x L x D)	1864 mm x 1029 mm x 35 mm	73.4 in x 40.5 in x 1.4 in
Maximum surface load (wind/snow)*	5400 Pa rear load / 5400 Pa front load	112.8 lb/ft^2 rear load / 112.8 lb/ft^2 front load
Hail impact resistance	ø 25 mm at 83 km/h	ø 1 in at 51.6 mph
Cells	66 high-efficiency mono-PERC MWT c-Si cells 166 x 166 mm	66 high-efficiency mono-PERC MWT c-Si cells 6.53x6.53 in
Glass	3.2 mm high transmittance, tempered, DSM anti-reflective coating	0.126 in high transmittance, tempered, DSM anti-reflective coating
Cables and connectors (refer to installation manual)	1200 mm ø 5.7 mm, MC4 from Staubli	47.2 in, ø 0.22 (12AWG), MC4 from Staubli
Backsheet	Multilayer, integrated insulation film and electrically conductive backsheet, superior hydrolysis and UV resistance, fluorine-free PV backsheet	
Frame	Anodized Aluminum (Black)	
Bypass diodes	3 diodes-30SQ045T (45V max DC blocking voltage, 30A max forward rectified current)	
Junction Box	UL 3730 Certified, IEC 62790 Certified, IP67 rated	

TEMPERATURE RATINGS	
Temperature Coefficient Isc	+0.046 %/°C
Temperature Coefficient Voc	-0.279 %/°C
Temperature Coefficient Pmax	-0.377 %/°C
NOCT (± 2°C)	43.5 °C
Operating temperature	-40/+85 °C

WARRANTIES	
Module product workmanship warranty	25 years**
Linear power performance guarantee	30 years
	≥ 98% end 1st yr ≥ 94.7% end 12th yr ≥ 90.8% end 25th yr ≥ 89.3% end 30th yr

CERTIFICATIONS	
Product	UL 61215-1:2017 Ed.1, UL 61215-2:2017 Ed.1, UL 61730-1:2017 Ed.1, UL 61730-2:2017 Ed.1, CSA C22.2#61730-1:2019 Ed.2, CSA C22.2#61730-2:2019 Ed.2, IEC 61215-1:2016 Ed.1, IEC 61215-2:2016 Ed.1, IEC 61730-1:2016 Ed.2, IEC 61730-2:2016 Ed.2, IEC 61701:2020 (Salt Mist Corrosion), IEC 62716:2013 (Ammonia Corrosion), CEC Listing, UL Fire Rating: Type 1
Factory	ISO9001:2015

SHIPPING SPECS	
Modules Per Pallet:	27 or 27 (California)
Pallets Per Truck	31 or 30 (California)
Modules Per Truck	837 or 810 (California)

* ⚠ Warning. Read the Safety and Installation Manual for mounting specifications and before handling, installing and operating modules.
** 12 year extendable to 25 years subject to registration and conditions outlined under "Warranty" at **silfabsolar.com**
PAN files generated from 3rd party performance data are available for download at: **silfabsolar.com/downloads**

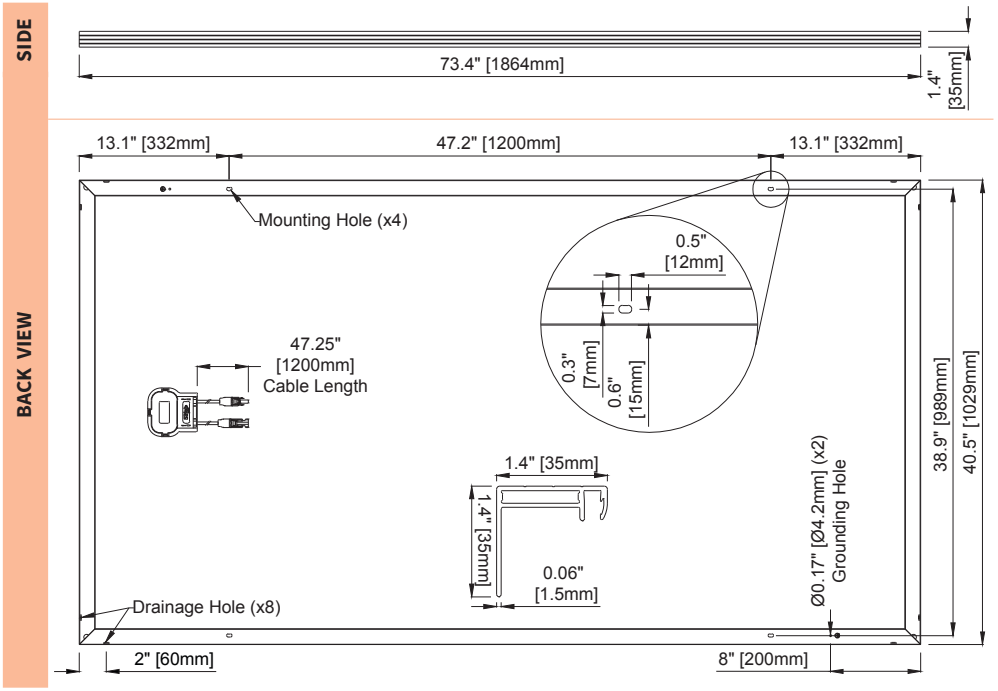

SILFAB SOLAR INC.

800 Cornwall Ave
Bellingham WA 98225 USA
T +1 360.569.4733
info@silfabsolar.com
SILFABSOLAR.COM

1770 Port Drive
Burlington WA 98233 USA
T +1 360.569.4733

240 Courtneypark Drive East
Mississauga ON L5T 2Y3 Canada
T +1 905.255.2501
F +1 905.696.0267

Silfab - SIL-410-BG-20230728

APPROVED

Montgomery County

Historic Preservation Commission

REVIEWED

By Dan.Bruechert at 1:10 pm, May 01, 2024

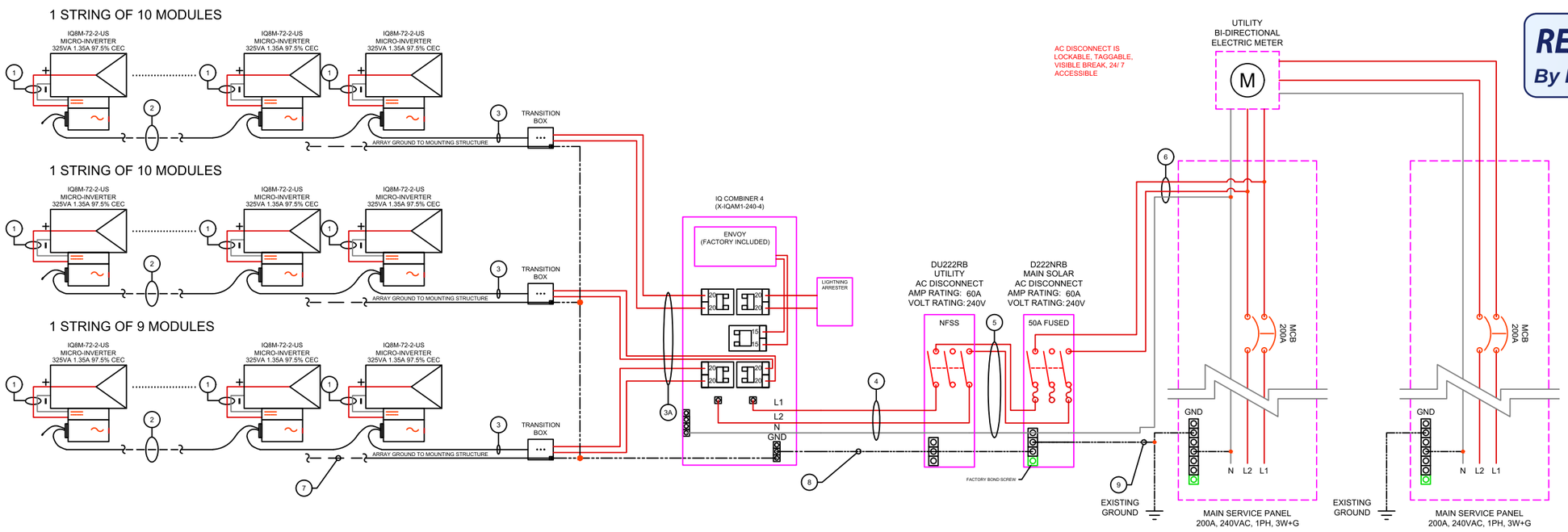

3-LINE DIAGRAM

MODULE SPECIFICATIONS	
MODEL NUMBER	SIL-410 BG
PEAK POWER	410 W
RATED VOLTAGE (Vmpp)	38.07 V
RATED CURRENT (Imp)	10.77 A
OPEN CIRCUIT VOLTAGE (Voc)	45.92 V
SHORT CIRCUIT CURRENT (Isc)	11.30 A
MAXIMUM SYSTEM VOLTAGE	1000VDC

INVERTER SPECIFICATIONS	
MODEL NUMBER	IQ8M-72-2-US
MAXIMUM DC VOLTAGE	60 V
MAXIMUM POWER OUTPUT	325 W
NOMINAL AC VOLTAGE	240 VAC
MAXIMUM AC CURRENT	1.35 A

ARRAY DETAILS			
NO. OF MODULES PER STRING	9	10	10
NO. OF STRINGS	1	1	1
ARRAY WATTS AT STC	3690	4100	4100
MAX. VOLTAGE	480 V	480 V	480 V

WIRE/CONDUIT SCHEDULE ARRAY			
TAG	DESCRIPTION	WIRE SIZE/TYPE	NOTES
1	Panel to Micro Inverter	PV Wire (Factory Made)	INTEGRATED
2	Micro Inverter to Micro Inverter	Pre-Manufactured Cable	
3	Micro Inverter to Transition Box	Pre-Manufactured Cable	
3A	Transition Box to Load Center	#10 THHN/THWN-2	INTEGRATED
4	Load Center to AC Disconnect	#8 Cu THHN/THWN-2	
5	AC Disconnect to AC Disconnect	#8 Cu THHN/THWN-2	
6	AC Disconnect to Interconnection Point	#6 Cu THHN/THWN-2	
7	Equipment Grounding Conductor	#8 Cu Bare Copper Wire	
8	Equipment Grounding Conductor	#8 Cu THHN/THWN-2	
9	Grounding Electrode Conductor	#6 Cu	

GENERAL ELECTRIC NOTES: NEC2017

1. EQUIPMENT USED SHALL BE NEW, UNLESS OTHERWISE NOTED.
2. EQUIPMENT USED SHALL BE UL LISTED, UNLESS OTHERWISE NOTED.
3. EQUIPMENT SHALL BE INSTALLED PROVIDING ADEQUATE PHYSICAL WORKING SPACE AROUND THE EQUIPMENT AND SHALL COMPLY WITH NEC.
4. COPPER CONDUCTORS SHALL BE USED AND SHALL HAVE AN INSULATION RATING OF 600V, 90°C, UNLESS OTHERWISE NOTED
5. CONDUCTORS SHALL BE SIZED IN ACCORDANCE TO THE NEC. CONDUCTORS AMPACITY SHALL BE DE-RATED FOR TEMPERATURE INCREASE, CONDUIT FILL AND VOLTAGE DROP.
6. ALL CONDUCTORS, EXCEPT PV WIRE SHALL BE INSTALLED IN APPROVED CONDUITS OR RACEWAY. CONDUITS SHALL BE ADEQUATELY SUPPORTED AS PER NEC.
7. AC DISCONNECT SHOWN IS REQUIRED IF THE UTILITY REQUIRES VISIBLE-BLADE SWITCH.
8. EXPOSED NON-CURRENT CARRYING METAL PARTS SHALL BE GROUNDED AS PER NEC.
9. LINE SIDE INTER-CONNECTION SHALL COMPLY WITH NEC.
10. SMS MONITORING SYSTEM AND IT'S CONNECTION SHOWN IS OPTIONAL. IF USED, REFER TO SMS INSTALLATION MANUAL FOR WIRING METHODS AND OPERATION PROCEDURE.
11. ASHRAE FUNDAMENTAL OUTDOOR DESIGN TEMPERATURES DO NOT EXCEED 47°C IN THE U.S. (PHOENIX, AZ OR PALM SPRINGS, CA)
12. FOR LESS THAN 9 CURRENT-CARRYING CONDUCTORS IN ROOF MOUNTED SUNLIGHT CONDUIT USING THE OUTDOOR TEMPERATURE OF 47°C

    12.1. 10AWG CONDUCTOR ARE GENERALLY ACCEPTABLE FOR MODULES WITH AN Isc OF 9.6 AMPS WITH A 15 AMP FUSE.

WIRE SIZING FOR OCPD

EX (Isc *(1.25)(1.25)(# OF STRINGS IN PARALLEL) = WIRE AMPACITY OR USING NEC TABLE 690.8

Solar Energy World
Because Tomorrow Matters

Solar Energy World LLC.
14880 Sweitzer Lane
Laurel, MD 20707
(888) 497-3233

Building Code: International Residential Code (IRC) 2018

Electrical Code: National Electrical Code (NEC) 2017

Wind Speed: 115 MPH | Snow Load: 30 PSF

Modules: (29) SILFAB SIL-410 BG

Inverter(s): (29) IQ8M-72-2-US

DC System Size: 11.890 kW | AC System Size: 9.425 kW

Customer Information:
John Salmen
16 Montgomery Ave
Takoma Park, MD 20912

AHJ: Montgomery County | Utility: Pepco

Sheet Name: Electrical 3-Line Diagram

Drawn By: AMP | Date: February 28, 2024

Scale: AS NOTED | Job Number: MD18170 | Sheet: E-2

APPROVED
Montgomery County
Historic Preservation Commission

REVIEWED
By Dan.Bruechert at 1:10 pm, May 01, 2024

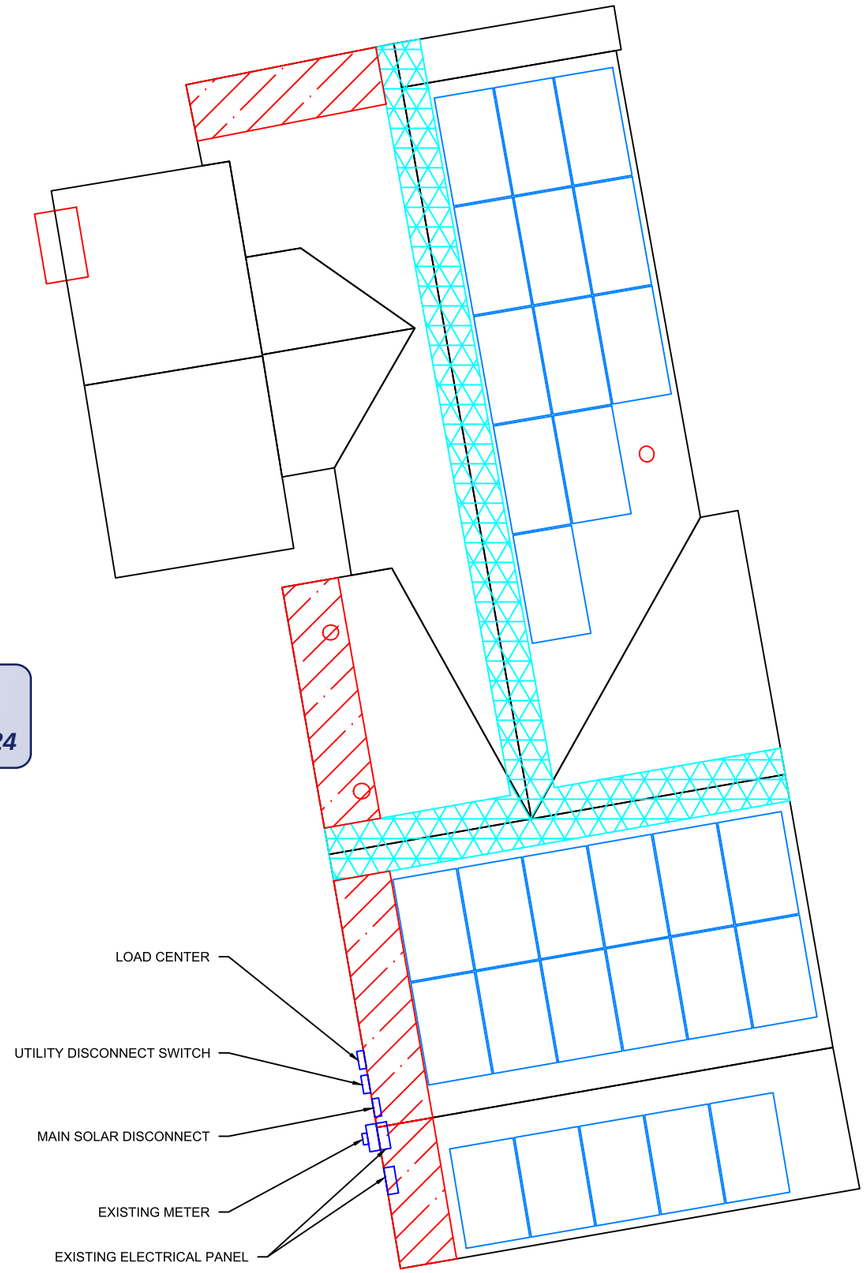

EQUIPMENT LOCATION PLAN

Scale: NTS

NOTE:

EQUIPMENT LOCATION PLAN IS APPROXIMATE, EXACT LOCATION TO BE VERIFIED WITH INSTALLATION CREW AND HOME OWNER AT THE TIME OF INSTALLATION.

STATE OF MARYLAND
DAVID C. HERNANDEZ
49993
PROFESSIONAL ENGINEER
DCH TECHNOLOGY

PROFESSIONAL CERTIFICATION. I HEREBY CERTIFY THAT THESE DOCUMENTS WERE PREPARED OR APPROVED BY ME, AND THAT I AM A DULY LICENSED PROFESSIONAL ENGINEER UNDER THE LAWS OF THE STATE OF MARYLAND, LICENSE NO. 49993, EXP 10/06/2024.
Sept 04 1:10 PM

Solar Energy World
Because Tomorrow Matters

Solar Energy World LLC.
14880 Sweitzer Lane
Laurel, MD 20707
(888) 497-3233

Building Code	International Residential Code (IRC) 2018
Electrical Code	National Electrical Code (NEC) 2017
Wind Speed	115 MPH
Snow Load	30 PSF
Modules	(29) SILFAB SIL-410 BG
Inverter(s)	(29) IQ8M-72-2-US
DC System Size	11.890 kW
AC System Size	9.425 kW
Customer Information	John Salmen 16 Montgomery Ave Takoma Park, MD 20912
AHJ	Montgomery County
Utility	Pepco
Sheet Name	Equipment Location Plan
Drawn By	AMP
Date	February 28, 2024
Scale	AS NOTED
Job Number	MD18170
Sheet	E-1

IQ8+

APPROVED
Montgomery County
Historic Preservation Commission

REVIEWED
By Dan.Bruechert at 1:10 pm, May 01, 2024

David C. Hernande
Digitally signed by David C. Hernande
Date: 2024.04.12 11:58:02 -04:00

STATE OF MARYLAND
DAVID C. HERNANDEZ
49993
PROFESSIONAL ENGINEER

PROFESSIONAL CERTIFICATION. I HEREBY CERTIFY THAT THESE DOCUMENTS WERE PREPARED OR APPROVED BY ME, AND THAT I AM A DULY LICENSED PROFESSIONAL ENGINEER UNDER THE LAWS OF THE STATE OF MARYLAND, LICENSE NO. 49993, EXP. 10/06/2024.

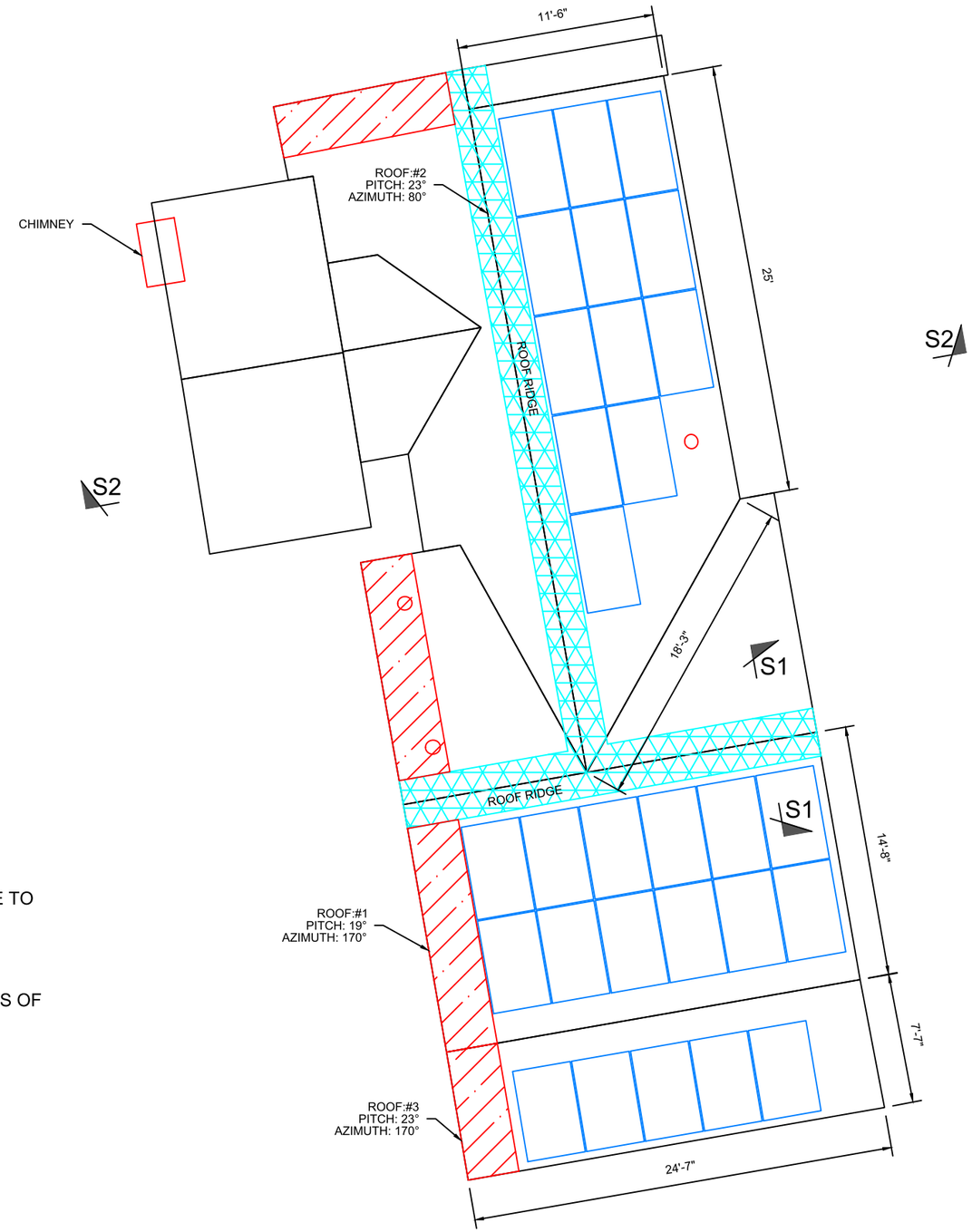

SOLAR PANEL LAYOUT

Scale: 1/8" = 1'-0"

N
S

KEY

FIRE SAFETY ZONE

3' PATHWAYS FROM LOWEST ROOF EDGE TO RIDGE PROVIDED PER R324.6.1

1'6" PATHWAYS PROVIDED ON BOTH SIDES OF RIDGE PER R324.6.2

PLAN VIEW TOTAL ROOF AREA: 1880 SQFT

SOLAR ARRAY AREA: 598.85 SQFT

THE SOLAR ARRAY IS 31.9% OF THE PLAN VIEW TOTAL ROOF AREA

NOTES:

1. THE SYSTEM SHALL INCLUDE (29) SILFAB SIL-410 BG.
2. SNAPNRACK TOPSPEED WILL BE INSTALLED IN ACCORDANCE WITH SNAPNRACK INSTALLATION MANUAL.
3. REFER TO STRUCTURAL DRAWING FOR SECTIONS MARKED AND ADDITIONAL NOTES.

Solar Energy World
Because Tomorrow Matters

Solar Energy World LLC.
14880 Sweitzer Lane
Laurel, MD 20707
(888) 497-3233

Building Code	International Residential Code (IRC) 2018
Electrical Code	National Electrical Code (NEC) 2017
Wind Speed	115 MPH
Snow Load	30 PSF
Modules	(29) SILFAB SIL-410 BG
Inverter(s)	(29) IQ8M-72-2-US
DC System Size	11.890 kW
AC System Size	9.425 kW
Customer Information	John Salmen 16 Montgomery Ave Takoma Park, MD 20912
AHJ	Montgomery County
Utility	Pepco
Sheet Name	Solar Panel Layout
Drawn By	AMP
Date	February 28, 2024
Scale	AS NOTED
Job Number	MD18170
Sheet	A-1

SITE PLAN
Scale: 1" = 20'-0"

APPROVED
Montgomery County
Historic Preservation Commission

REVIEWED
By Dan.Bruechert at 1:10 pm, May 01, 2024

STATE OF MARYLAND
DAVID C. HERNANDEZ
49993
PROFESSIONAL ENGINEER
DCH TECHNOLOGY

PROFESSIONAL CERTIFICATION. I HEREBY CERTIFY THAT THESE DOCUMENTS WERE PREPARED OR APPROVED BY ME, AND THAT I AM A DULY LICENSED PROFESSIONAL ENGINEER UNDER THE LAWS OF THE STATE OF MARYLAND, LICENSE NO. 49993, EXP 10/06/2024.
Sept 04/1974

Solar Energy World
Because Tomorrow Matters

Solar Energy World LLC.
14880 Sweitzer Lane
Laurel, MD 20707
(888) 497-3233

Disclaimer:
This drawing is the property of Solar Energy World Inc. The information herein contained shall be used for the sole benefit of Solar Energy World. It shall not be disclosed to others outside the recipient's organization, in whole or in part, without the written permission of Solar Energy World, except in connection with the sale and use of the respective Solar Energy equipment.

Building Code	International Residential Code (IRC) 2018
Electrical Code	National Electrical Code (NEC) 2017
Wind Speed	115 MPH
Snow Load	30 PSF
Modules	(29) SILFAB SIL-410 BG
Inverter(s)	(29) IQ8M-72-2-US
DC System Size	11.890 kW
AC System Size	9.425 kW
Customer Information	John Salmen 16 Montgomery Ave Takoma Park, MD 20912
AHJ	Montgomery County
Utility	Pepco
Sheet Name	Site Plan
Drawn By	AMP
Date	February 28, 2024
Scale	AS NOTED
Job Number	MD18170
Sheet	A-2