HISTORIC PRESERVATION COMMISSION

Marc Elrich
County Executive

Robert K. Sutton
Chairman

Date: December 18, 2023

MEMORANDUM

TO: Rabbiah Sabbakahn
Department of Permitting Services
FROM: Dan Bruechert
Historic Preservation Section
Maryland-National Capital Park & Planning Commission Historic
SUBJECT: Area Work Permit #1032177 - Building Demolition and New Construction

---

The Montgomery County Historic Preservation Commission (HPC) has reviewed the attached application for a Historic Area Work Permit (HAWP). This application was **Approved** at the June 14, 2023 HPC meeting.

The HPC staff has reviewed and stamped the attached construction drawings.

THE BUILDING PERMIT FOR THIS PROJECT SHALL BE ISSUED CONDITIONAL UPON ADHERENCE TO THE ABOVE APPROVED HAWP CONDITIONS AND MAY REQUIRE APPROVAL BY DPS OR ANOTHER LOCAL OFFICE BEFORE WORK CAN BEGIN.

Applicant: Tom & Maggie McCullough
Address: 3929 Washington St., Kensington

This HAWP approval is subject to the general condition that the applicant will obtain all other applicable Montgomery County or local government agency permits. After the issuance of these permits, the applicant must contact this Historic Preservation Office if any changes to the approved plan are made. Once work is complete the applicant will contact Winnie Cargill at 301.495.2108 or winnie.cargill@montgomeryplanning.org to schedule a follow-up site visit.

3929 WASHINGTON STREET
KENSINGTON , MD 20895

PLAT DATA

BLOCK 12, LOT 16 & PART OF LOT 15
KENSINGTON PARK
TOWN OF KENSINGTON

MONTGOMERY COUNTY
ZONED: R-60

BUILDING TO BE FULLY SPRINKLERED IN ACCORDANCE WITH 2018 IRC & NFPA13D

GRAPHIC SYMBOLS

- SECTION SHEET NO. (A / A-5)
- SECTIONAL DETAIL SHEET NO. (A / A-5)
- DETAIL TARGET, ENLARGEMENT SHEET NO. (A / A-5)
- EXTERIOR ELEVATION SHEET NO. (N / A-12)
- INTERIOR ELEVATION SYMBOL DRAWING NO. SHEET NO. (N W E S / 2 / A-12)
- ELEV. 42.00 — DATUM ELEVATION
- 106 — ROOM NUMBER
- 4 — DOOR NUMBER
- W1 — WINDOW TYPE
- SF1 / A-6 — STOREFRONT ELEVATION
- 1 — REVISION NUMBER
- P1 — PARTITION TYPES SEE SCHEDULE
- T — TEMPERED GLASS

LIST OF DRAWINGS

APPROVED
Montgomery County
Historic Preservation Commission

REVIEWED
By Dan.Bruechert at 3:50 pm, Dec 18, 2023

CALCULATIONS

MAIN HOUSE — G.S.F.

BASEMENT:	
FINISHED SPACE:	1,546 SQ. FT.
UNFINISHED SPACE:	298 SQ. FT.
PATIO:	225 SQ. FT.
TOTAL CONDITIONATED:	1,844 SQ. FT.
FIRST FLOOR:	
FINISHED SPACE:	2,134 SQ. FT.
GARAGE:	472 SQ. FT.
FRONT PORCH:	67 SQ. FT.
SCREENING PORCH:	228 SQ. FT.
TOTAL CONDITIONATED:	2,606 SQ. FT.
SECOND FLOOR:	
FINISHED SPACE:	2,258 SQ. FT.
TOTAL CONDITIONATED :	6,708 SQ. FT.
BUILDING FOOTPRINT:	2,560 SQ. FT.

ZONING DATA

ZONED: R-60

	PROVIDED	REQUIRED
LOT AREA	17,527.5 S.F.	6.000 S.F. MIN.
LOT COVERAGE	14.60%	20% MAX. (3,505.5)
FRONT YARD SETBACK	35.2.1' EBL	30.0' MIN
SIDE YARD SETBACK	10 FT. & 10FT	7/ 7' (14') FT. TOTAL 10/ 10' (20') FT. TOTAL (TOWN)
REAR YARD SETBACK	20' FT.	20.0' MIN.
LOT FRONTAGE	SEE CIVIL DWG'S	50.0' MIN.
BUILDING HEIGHT	2 STORIES	2 1/2 STORIES
	27.36' TO MEAN RF. FROM AVARAGE GRADE	30.0' TO MEAN RF. FROM AVERAGE GRADE.

MATERIAL SYMBOLS

- EARTH
- CONCRETE
- STEEL
- BRICK
- FINISH WOOD
- CONCRETE MASONRY UNIT
- ROUGH LUMBER BLOCKING
- GYPSUM SHEATHING
- SLAT BOARD
- ACOUSTICAL TILE

ABBREVIATIONS

ABOVE FINISH FLOOR	AFF	EACH	EA	INTERIOR	INT	PLATE	PL	VERTICAL	VERT
ACOUSTIC	ACST	EAST	E			PLUMBING	PLMB	VESTIBULE	VEST
ADJUSTABLE	ADJ	ELECTRC, ELECTRICAL	ELEC	JANITOR'S CLOSET	JC	PLYWOOD	PLYWD	VINYL COMPOSITE TILE	VCT
AIR CONDITIONING	A/C	ELEVATION	EL	JOINT	JT	POLYVINYL CHLORIDE	PVC	VOLTS	V
AIR HANDLING	AH	ELEVATOR	ELEV	JOIST	JST	POUND	LB		
AIR HANDLING UNIT	AHU	EMERGENCY POWER	EM	JUNCTION BOX	JB	POUNDS PER SQUARE INCH	PSI	WALLBOARD	WB
ALTERNATE	ALT	EMPTY CONDUIT	EC			PREFABRICATED	PREFAB	WELDED WIRE FABRIC	WWF
ALTERNATE CURRENT	AC	ENGINEER	ENGR	LAMINATED	LAM	PREFINISHED	PREFIN	WIDTH	W
ALUMINUM	AL	ELECTRIC WATER COOLER	EWC	LAVATORY	LAV	PRELIMINARY	PRELIM	WINDOW	WDW
AMPERES	AMP	EXHAUST	EXM	LEFT HAND	LH			WITH	W/
ANCHOR BOLT	AB	EXISTING	EX	LENGTH	L	QUARRY TILE	QT	WITHOUT	W/O
ARCHITECT	ARCH	EXPANSION	EXP	LIBRARY	LIB			WOOD	WD
AT	@	EXPANSION JOINT	EXP JT	LINEAR FEET	LF	RADIUS	RAD, R		
AVERAGE	AVG	EXTERIOR	EXT	LONG LEG HORIZONTAL	LLH	REFRIGERATOR	REF	YARD	YD
				LONG LEG VERTICAL	LLV	REINFORCING	REINF		
BEAM	BM	FAHRENHEIT	F			REQUIRED	REQD		
BOARD	BD	FEET PER MINUTE	FPM	MAINT'NANCE	MAINT	RESILIENT	RES		
		FEET, FOOT	FT	MANUFACTURER	MFR	RETURN AIR	RA		
CABINET	CAB	FINISH	FIN	MASONRY	MAS	REVISION	REV		
CATALOG	CAT	FIRE EXTINGUISHER CAB.	FEC	MASONRY OPENING	MO	RIGHT HAND	RH		
CEILING	CLG	FLOOR	FL	MAXIMUM	MAX	ROOM	RM		
CENTERLINE	CL	FLUORESCENT	FLOUR	MECHANICAL	MECH	ROUGH OPENING	RO		
CERAMIC TILE	CT	FIRE RATED	FR	MEDIUM	MED				
CLOSET	CLO			MEZZANINE	MEZZ	SCHEDULE	SCHD		
COLUMN	COL	GAUGE	GA	MINIMUM	MIN	SECTION	SECT		
COMPANY	CO	GALLON	GAL	MISCELLANEOUS	MISC	SERVICE SINK	SS		
CONCRETE	CONC	GALLONS PER MINUTE	GPM	MOUNTED	MTD	SIMILAR	SIM		
CONCRETE MASONRY UNITS	CMU	GALVANIZED	GALV	MULLION	MUL	SOUND TRANSMISSION	STM		
CONFERENCE	CONF	GENERAL CONTRACTOR	GC			SPECIFICATION	SPEC		
CONTINUOUS	CONT	GROUNDED FAULT INTERUPT.	GFI	NOT IN CONTRACT	NIC	SQUARE	SQ		
CONTROL JOINT	CJ	GYPSUM	GYP	NOT TO SCALE	NTS	STANDARD	STD		
COORDINATE	COORD	GYPSUM WALLBOARD	GWB	NUMBER	# , NO	STAND PIPE	ST		
CORRIDOR	CORR					STAINLESS STEEL	SS		
CUBIC FEET	CF	HANDICAPPED	HDCP	OFFICE	OFF	STATION	STA		
CUBIC FEET PER MINUTE	CFM	HARDWARE	HDW	ON CENTER	OC	STEEL	STL		
		HARDWOOD	HDWD	OPENING	OPNG	STORAGE	STOR		
DEDICATED	DED	HEIGHT	HGT, H	OPPOSITE	OPP	STRUCTURAL	STRUCT		
DEPARTMENT	DEPT	HERTZ	HZ	OUNCE	OZ	SUSPENDED CEILING	SUSP		
DEPTH	D	HOLLOW METAL	HM	OVERALL	OA				
DETAIL	DET	HORIZONTAL	HORIZ	OVERHEAD	OH	TELEPHONE	TEL		
DIAGONAL	DIAG	HORSE POWER	HP			THICK OR THICKNESS	THK		
DIAMETER	DIA	HOT WATER HEATER	HWH	PAINTED	PTD	THRESHOLD	THRSLD		
DIMENSION	DIM	HOUR	HR	PANEL	PNL	TILE	T		
DISHWASHER	DW			PARTITION	PTM	TO BE SELECTED	TBS		
DOOR	DR	INCH	IN	PERPENDICULAR	PERP	TONGUE & GROOVE	T & G		
DOWN	DN	INFORMATION	INFO	PERSONAL COMPUTER	PC	TOP	T		
DRAWING	DWG	INSIDE DIAMETER	ID	PHASE	PH	TYPICAL	TYP		
DRINKING FOUNTAIN	DF	INSULATED, INSULATION	INSUL	PLASTIC LAMINATE	P LAM				

PROJECT INFORMATION

CLIENT/CONTRACTOR
McCULLOUGH RESIDENTIAL, L.L.C.
CONTACT: THOMAS McCULLOUGH
5513 CONNECTICUT AVE, NW
SUITE 200
WASHINGTON, D.C. 20015
(202) 237-2415 ext 10
Tom@mccullough-construction.com

ARCHITECT
GTM ARCHITECTS
CONTACT: ROLANDO J VALDEZ
7735 OLD GEORGETOWN ROAD
SUITE 700
BETHESDA, MD 20814
(240) 333-2025
(240) 333-2001 FAX
rvaldez@gtmarchitects.com

STRUCTURAL ENGINEER
structBIM ENGINEERS
CONTACT: KAUSHAL KANSARA, P.E.
20130 LAKEVIEW CTR. PLZ.
SUITE 400
ASHBURN, VA 20147
MOBILE (703) 405-9732
kaushal@structbim.com

CIVIL ENGINEER
CAS ENGINEERING
CONTACT: JEFF ROBERTSON
19960 FISHER AVE.
POOLESVILLE, MD
(301) 607-8031 x14
david@casengineering.com

PLANS PREPARED BASED ON THE FOLLOWING CODES:
INTERNATIONAL RESIDENTIAL CODE 2018

GTM ARCHITECTS
7735 OLD GEORGETOWN ROAD
SUITE 700
BETHESDA, MD 20814
(240)333-2000
(240)333-2001 FAX
WWW.GTMARCHITECTS.COM

Seal

I certify that these documents were prepared or approved by me, and that I am a duly licensed architect under the laws of the State of Maryland, license number 5365, Expiration Date: 12-06-2024.

Consultant

Project
3929 WASHINGTON ST
3929 WASHINGTON ST. KESINGTON, MD 20895

Owner
TOM AND MAGGIE McCULLOUGH

Developer

Issue Description	*Date*
PERMIT SET	09-29-2023
PERMIT SET PROGRESS SET	08-29-2023
D.D. ELECTRICAL & LIGHTING SET	08-10-2023
DESIGN DEV'T PROGRESS SET	07-24-2023

GTM Project No.	23.0187
Checked By	GTM/ RJV
Drawn By	RJV/ CCM
Scale	AS NOTED

Sheet Title
COVER SHEET

Sheet No.
001

FILE NAME:

APPROVED
Montgomery County
Historic Preservation Commission

REVIEWED
By Dan.Bruechert at 3:50 pm, Dec 18, 2023

SPECIFICATIONS FOR RESIDENTIAL CONSTRUCTION
The purpose of the following specifications is to establish the level of quality required for both materials and workmanship. These notes are intended as a general outline; specific and additional requirements are indicated on the drawings. The contractor should also note that not all of the items mentioned below may apply to the project.

GENERAL REQUIREMENTS
1. All work shall conform to the International Residential Code (IRC), 2018 edition and all applicable sections of the Montgomery County code for single family construction and applicable building codes including (but not limited to) IECC 2018.
2. The General Contractor shall stake off area of new construction and designate trees and shrubs for removal as required. Protect all landscaping beyond the areas of construction.
3. The General Contractor shall coordinate phasing and time limits for new construction with the Owner, so as to establish an acceptable payment schedule related to the status of the project.
4. Any permits required for the project shall be obtained by the General Contractor, unless informed otherwise by the Architect that the permit has been obtained.
5. The General Contractor shall store materials and equipment in a safe and suitable place during the construction process. The Owner is not responsible for any losses of material.
6. All debris shall be periodically removed from the site so as to not create a physical or visual hazard to the Owner.
7. The General Contractor shall be licensed in Montgomery County, Maryland, and shall guarantee the project labor and materials for a period of one year after the Architect determines the work to be substantially complete, as per county laws.
8. The General Contractor shall provide competent daily supervision of the project.
9. The General Contractor shall notify the related authorities for inspection of the work as related to the specific areas required by the county.
10. The General Contractor shall Carry Workmen's Compensation Insurance for every person employed by him on the premises and shall maintain such insurance in full force during the entire time of this contract. The General Contractor shall carry Comprehensive General and Automotive Liability Insurance of $25,000 to $50,000 minimum. These requirements can be amended by the Owner if specified by the contract.
11. All drawings, specifications, and copies furnished by the Architect are the documents for the construction of this project only and shall not be used in any other circumstance.
12. The General Contractor shall carefully study the contract documents and report to the Architect any error, omission, or inconsistency they may discover.
13. The General Contractor shall provide and pay for all labor, materials, equipment, tools, machinery and other facilities and services necessary for proper execution and completion of the work, and shall guarantee no mechanic liens against the project at completion.
14. The Contract Sum is stated in the agreement and is the total amount payable by the Owner, which designates the addition, deletion, or revision to the contract. The Change Order must also designate the change in the original contract sum.
15. At least seven days before the date of each progress payment established by the agreement, the General Contractor shall submit to the Architect and Owner an itemized application designating which portion of the work has been completed.
16. The Contractor shall verify dimensions prior to construction, and all discrepancies shall be brought to the attention of the Architect so that clarifications can be made. The Contractor shall field verify all dimensions related to existing conditions. Written dimensions take precedence over scaled sizes. Do not scale drawings to determine missing dimensions.
17. The Contractor shall be responsible to have new utility line services (gas, electric, telephone) installed to the house connection/meter location.

DEMOLITION NOTES
1. Every care shall be taken during demolition to protect the house by means of temporary supports and braces as necessary to prevent any structural failure during removal and replacement of existing structural members.
2. Temporary walls and dust barriers shall be installed as necessary to prevent circulation of dirt and dust into portions of the house that are not part of the work.
3. All dashed walls, fixtures, windows, etc., are to be removed. See Demolition Sheets for additional information.
4. Conduct all demolition operations in compliance with applicable codes and ordinances.
5. Coordinate demolition with work of subcontractors.
6. Maintain the existing structure in a watertight condition at all times.
7. Provide the necessary enclosures to allow the owner to maintain comfortable temperatures within the occupied portions of the home during construction.

GENERAL STRUCTURAL NOTES
1. Work shall be done in accordance with the International Residential Code (IRC), 2018 Edition.
2. The design gravity live loads are as follows:
   Roof load (snow): 30 LL + 15 DL = 45 PSF
   Living Spaces: (1st Floor) 40 LL + 15 DL = 55 PSF
   Sleeping Spaces: (2nd Floor) 30 LL + 15 DL = 45 PSF
   Exterior Decks: 60 LL + 15 DL = 75 PSF
   Live Load Deflection Limitation for floors and stairs shall be L/360
   Live Load Deflection Limitation for roofs shall be L/240

FOUNDATIONS
1. The foundation for the structure has been designed for the assumed bearing pressure of 1,500 PSF. This is to be verified by the contractor prior to the footings being poured. It is also assumed that there is no water condition present.
2. Basement walls have been designed for an assumed equivalent fluid pressure of 55 PSF.
3. Excavations for spread footings and continuous footings shall be cleaned and hand tamped to a uniform surface.
4. Slabs on grade shall be underlaid by a minimum of 4" of granular material having a maximum aggregate size of 1.5 inches and no more than 2% fines. Prior to placing the granular material, the floor subgrade shall be properly compacted, proofrolled, free of standing water, mud, and frozen soil. Before placement of concrete, a vapor barrier shall be placed on top of the granular fill.
5. Bottoms of all exterior footings shall be 2'-6" minimum below finished grade. Footings shall project a minimum of 12" into undisturbed existing natural ground having allowable bearing capacity stated. Depths of footings subject to change if soil conditions are other than assumed.

ENERGY CONSERVATION
1. The following provisions for thermal resistance meet or exceed the requirements stipulated by the 2018 International Energy Conservation Code (IECC), climate zone 4A. These values are the minimum acceptable. See drawings for specific values required for the project.
2. Insulation — IECC
   A. Ceiling (of uppermost story) — R-49, or R-38 continuous
   B. Vaulted Ceiling allowance — R-49 w/lesser of 500 sf or 20% of total insulated ceiling area R-30
   C. Frame walls (with storm window or double glazing) — R-20 or 13+5 (exterior)
   D. Rim Joists — Equal to wall below
   E. Floors over unheated spaces (including floor overhangs) — R-38
   F. Masonry walls (enclosed heated living areas) — R-13 or R-10 continuous
   G. Slab on grade (heated space) 24" Perimeter Insulation — R-10
   H. Windows — U-0.32 SHGC-0.40
   I. Doors — See section R402.3.4
3. Air Infiltration
   A. Provide ¼" x 5.5" compressible sill sealer between foundation wall and all sill plates.
   B. Windows: Not exceeding three tenths (0.3) CFM of sash crack
   C. Sliding glass doors: not exceeding three tenths (0.3) CFM per square foot of door area
   D. Swinging doors: Not exceeding five tenths (0.5) CFM per square foot of door area. Provide 1" compressible sill sealer between foundation wall and all sill plates.
   E. Building thermal envelopes shall be tested per IECC R402.4.1.2 and verified as having air leakage not to exceed 3 air changes per hour.
   F. Recessed lighting in the thermal envelope shall comply with IECC R402.4.5
   G. Systems duct and piping installation shall comply with IECC R403 including Whole-House Mechanical Ventilation system installation.

TERMITE CONTROL SOIL TREATMENT
1. Treat soil with Bayer Corporation, Premise 75, in strict accordance with manufacturer's recommendations.
2. Remove all extraneous sources of wood cellulose and other edible materials such as wood debris, tree stumps and roots, stakes, formwork, and construction waste wood from soil within and around foundations. Loosen, rake, and level soil to be treated except previously compacted areas under slabs and footings.
   A. Slabs-on-Grade and Basement Slabs: Under ground-supported slab construction, including footings, building, slabs, and attached slabs as an overall treatment. Treat soil materials before concrete footings and slabs are placed.
   B. Foundations: Adjacent soil including soil along the entire inside perimeter of foundation walls, along both sides of interior partition walls, around plumbing pipes and electric conduit penetrating the slab, and around interior column footers, piers, and chimney bases; also along the entire outside perimeter, from grade to bottom of footing. Avoid soil washout around footings.
   C. Crawlspaces: Soil under and adjacent to foundations as previously indicated. Treat adjacent areas including around entrance platform, porches, and equipment bases. Apply overall treatment only where attached concrete platform and porches are on fill or ground.Crawlspaces used as plenum spaces strictly follow manufacturer's recommendedations.
   D. Along driplines of roof overhangs without gutters.
   E. Where condensate lines from mechanical equipment drip or drain to soil.
   F. At plumbing penetrations through ground-supported slabs.
   G. Other sites and locations as determined by licensed installer.

WARRANTY
Special Warranty: Manufacturer's standard form, signed by Applicator and Contractor certifying that termite control work, consisting of applied termiticide treatment, will prevent infestation of subterranean termites. If subterranean termite activity or damage is discovered during warranty period of five (5) years from Substantial Completion, re-treat soil and repair or replace damage caused by termite infestation.

CONCRETE
1. All concrete construction shall conform to the latest A.C.I. code 332.
2. Concrete shall have natural sand fine aggregates and normal weight coarse aggregates conforming to ASTM C33, Type 1 Portland Cement conforming to ASTM 150, and shall have a minimum 28-day compressive strength (F/C) as follows:
   - F/C = 2,500 PSI for footings, interior slabs on grade (except garages) and fill in concrete blocks
   - F/C = 3,000 PSI for foundation walls exposed to weather.
   - F/C = 3,500 PSI for drives, porches, walks, steps, and garage slabs.
   - F/C = 4,000 PSI for precast concrete units.
3. All poured in place concrete exposed to weather conditions, including the garage floor, shall be air entrained by 6% of concrete volume. No calcium chloride or other admixtures shall be used except as approved in writing by the Owner.
4. Slabs on grade: except where otherwise noted, shall be min. 4" thick, reinforced with 6x6 W1.4xW1.4 WWF Lap mesh 6" in each direction. Slab shall be placed on a layer of 6 mil polyethylene over a 4" layer of washed gravel. Refer to drawings for location of thermal insulation.
5. Concrete finish: Exposed exterior steps, stoops and slabs shall first have a steel trowel finish and then a very light broom finish. Exposed interior and garage shall receive a steel trowel finish.
6. Expansion joints: Non-organic, Owner approved, expansion joint material shall be cast in place where slabs abut masonry or concrete walls to prevent bonding between the two materials.
7. Curing: Exposed concrete surfaces shall be sealed with an approved chemical curing compound within one hour of the final troweling. Curing compound label shall state that its use will not interfere with adhesion of subsequent floor finishes.
8. Reinforcing steel: Reinforcing steel for the ties shall be intermediate grade deformed billet steel conforming to ASTM spec. A615-40. All other reinforcing steel shall conform to ASTM spec. A615-60. Welded wire fabric to conform to ASTM A-185. Fabric shall be supplied in flat sheets and lapped to mesh at splices. All reinforcing shall be detailed, fabricated and installed in accordance with the latest detailing manual A.C.I. 315.
9. Reinforcement designated as "continuous" shall lap 36 bar diameters at splices unless noted otherwise.
10. Horizontal footing and walls: reinforcement shall be continuous and shall have 90 degree bends and extensions, or corner bars of equivalent size lapped 36 bar diameters, at corners and intersections.
11. Footings:
   A. Bottom of footings shall extend a minimum of 2'-6" below any surface subject to freezing: footings shall extend at least 12" into undisturbed soil or set on controlled compacted fill. Depth of footing subject to change if soil conditions are other than assumed. Bearing value of soil is assumed to be 1,500 PSF with no water condition present. Minimum bearing value of controlled fill shall be certified by a licensed geotechnical engineer.
12. Anchor bolts: set anchor bolts or approved straps as shown. Bolts for wood sill plates shall be ½" in diameter and project 8" into concrete; set straps or bolts 12" max from end of any plate and 6'-0" max O.C. spacing, unless shown otherwise.

MASONRY
1. Brick shall conform to ASTM C-62. Mortar shall conform to federal specifications SS-C-181E-type II. Lay brick only when outside temperature is 45° F and rising. Protect all work from cold and frost and ensure that mortar will cure without freezing. Calcium chloride and antifreeze admixture will not be acceptable.
2. Bearing steel and wood beams shall be supported on solid masonry piers as indicated. Other structural members (lintels, etc.) shall be supported on 8" of solid masonry. All beams and lintels shall have minimum horizontal bearing of 4".
3. Anchor bolts: Set anchor bolts or approved anchor straps as required. Bolts for wood sill plates shall be ½" diameter and project 16" into masonry. Set bolts or straps 12" max. from end of any plate.
4. CMU walls shall have horizontal wire joints reinforcement at 16" O.C. vertically, or as indicated.
5. Provide 4" solid masonry on all sides of joists or beams entering masonry party walls.
6. Brick Veneer:
   A. Secure brick veneer with 16 GA hot-dipped zinc coated wall ties at 16" O.C. horizontally and vertically.
   B. Provide flashing at first course above grade, at lintels, sills and elsewhere as shown. Provide 3/16" diameter tube weeps or cellular plastic head joint-type weeps at 24" O.C.
   C. Provide through-wall flashing above all unsheltered openings. Flashing shall be end-dammed at all terminations.
   D. Install high-density polyethylene or polyester cavity drainage material, equal to "mortar net," above all flashing. Material shall be sized to fill the width of the cavity.
7. Stone Veneer:
   A. Vapor permeable weather-resistive barriers: two-ply asphalt saturated Kraft Grade D breather type sheathing paper.
   - Basis of design is Fortifiber® / two-ply super jumbo tex® 60 minute
   - Reference standard; federal specification W-B-790A, Type I, Grade D, Style 2
   - Moisture vapor transmission: 35 grams minimum; ASTM E 96
   - Water resistance: 150 minutes (Professional), ASTM D 779
8. C.M.U.'s to have water repellent block admixture; 'Dry-Block' by W.R. Grace recommended.
9. Exterior mortar to have water repellent admixture.
10. Unless noted otherwise, tool all joints concave.
11. Fully bed in mortar face shells and webs of first course of CMU.
12. All masonry joints shall be fully filled with mortar, including head joints.

STEEL
1. Structural steel shall conform to ASTM A36
2. Steel beams shall conform to ASTM A572 Grade 50.
3. All steel angles, lintels, beams, columns, etc. are to be shop primed with red lead or red oxide primer or approved equal. Structural steel at or below grade shall be painted with two coats on an asphaltic base paint and protected with a minimum of 2" solid masonry or concrete.
4. For all openings or recesses in brick or brick-faced masonry walls not specifically detailed, provide one steel angle for each 4" of wall thickness. Provide lintels according to the schedule below:

Lintel	Masonry Opening	Min. Bearing
L 3-1/2 X 3-1/2 X 1/4	Up to 3'-0"	4"
L 3-1/2 X 3-1/2 X 5/16	3'-1" to 4'-0"	6"
L 4 X 3-1/2 X 1/4	4'-1" to 5'-0"	6"
L 4 X 3-1/2 X 5/16	5'-1" to 6'-0"	6"
L 5 X 3-1/2 X 5/16	6'-1" to 7'-0"	8"
L 6 X 4 X 3/8	7'-1" to 8'-0"	8"

Note: For openings greater than 8'-0", consult with Architect and Engineer.

WOOD & CARPENTRY
1. Unless otherwise noted on drawings, all structural wood members shall be #2 Southern Pine or equal, with the following combination of unit stresses:

Extreme fiber stress in bending	1,200 PSI
Compression parallel to the grain	1,000 PSI
Compression perpendicular to the grain	565 PSI
Modulus of Elasticity Shear Stress	1,500,000 PSI

2. Manufactured joists and trusses (if shown on drawings) must be designed and certified by a licensed engineer and submitted to the Architect and local building department for approval.
3. Roof rafters and/or trusses shall be connected at each bearing point with one prefab-90 PSI galvanized rafter tie (hurricane clip) by Simpson or approved equal. Similarly, floor joists and trusses shall be connected with one prefabricated joist hanger. Each anchor shall be 18 GA minimum thick.
4. Provide double joists under all parallel partitions, at joists that support headers, and at headers that support joists. Use joist hangers where applicable.
5. All joists and rafters shall be rigidly braced at intervals not exceeding 8'-0".
6. Double studs at header bearing, double joists and rafters at all openings according to schedule below (unless noted otherwise on drawings):
   Double 2 x 4 Up to 3'-0"
   Double 2 x 6 Up to 4'-0"
   Double 2 x 8 Up to 5'-0"
   Double 2 x 10 Up to 7'-0"
   Double 2 x 12 Up to 8'-0"
   All double headers and joists shall be joined with a minimum of two rows of 16 d nails 12" on center.
7. Provide blocking, banding, crush blocks, stiffeners, or rim joists, as required, at joist ends.
8. Floor joists shall have a minimum bearing of 2" on framed walls. All beams shall have minimum bearing of 4" bearing on all supports.

Provide moisture protection to end of beams pocketed into masonry walls.
9. Wood joists, studs, and beams shall not be cut or notched unless authorized by the Architect. Drilled holes shall be centered at mid-depth of the member and the hole diameter shall not exceed ⅓ the actual depth of the member. No holes shall be drilled within 2' from the ends or within the middle ⅓ of the span. Provide 4" clear between holes.
10. Existing conditions shall be verified by the Contractor. Any existing damaged wood members shall be identified and replaced by the Contractor.
11. Contractor shall be responsible for providing necessary bracing and shoring of existing members and walls while altering the structure.
12. Provide 2x4 intermediate blocking at all bearing and non-bearing partitions.
13. All plywood shall be APA span rated. Use exterior grade plywood wherever edge of face will be exposed to weather. Interior plywood exposed to weather during construction shall be Exposure I min.
   A. Exterior wall sheathing shall be ½" plywood unless noted otherwise.
   B. Subflooring shall be ¾" tongue and groove plywood, glued and screwed to the floor joists as per APA recommendations.
   C. Where spacing of roof structure members is 16" O.C., roof sheathing shall be ½" plywood (5/32" where roofing is slate or tile). Where spacing of roof structure members is 24" O.C., roof sheathing shall be ⅝" plywood (19/32" where roofing is slate or tile). Provide "H" clips at butt joints of roof sheathing.
14. MICRO-LAM L.V.L. (laminated veneer lumber) beams shall be manufactured by Trus Joist MacMillan or approved equal. Beams shall be installed according to manufacturer's recommendations. When fastening two or more beams together, provide a minimum of two rows of 16 d nails 12" on center.
15. TJI Floor Joists are to be manufactured by Trus Joist MacMillan or approved equal. Install per manufacturer's recommendations.
16. The following wood elements are to be pressure treated with preservative, bearing the AWPA standard use category label UC3B or UC4B (for ground contact):
   A. Sill plates resting on concrete or masonry walls.
   B. Sill plates resting on concrete slabs on grade.
   C. Joists which enter concrete or masonry walls and have less than ½" clearance on tops, sides, and ends.
   D. Sleepers resting directly on concrete slabs.
   E. Exterior porch and deck framing, decking, and stairs.
17. Fasteners, hangers, and metal accessories used in pressure treated wood construction shall be type 304 or 316 stainless steel. Treated lumber shall not be placed in contact with aluminum flashing or other aluminum components.
18. Exterior Wood Trim:
   A. All exterior wood trim shall be clear pine or redwood.
   B. All trim shall be primed on both sides prior to installation.
   C. All outside corners shall be mitered. No butt joints will be accepted
19. Exterior Synthetic Trim shall be "AZEK," with traditional smooth surface. Fasteners, joint cement, and installation procedures shall be in accordance with manufacturer's recommendations.
20. Siding: Refer to drawings for type specified.
   A. Cement board shall be non-asbestos fiber-cement material complying with ASTM Standard Specification C1186 Grade II, Type A. Materials shall be equal to those manufactured by James Hardie Building Products.
   B. Wood siding and sidewall Shingles shall be kiln dried Western Red Cedar, "Clear V.G. Heart" grade for clear and transparent stain finishes, and "A Clear" grade for semi-transparent stain or opaque finishes. Semi-transparent stain or opaque finish shall be applied in strict accordance to manufacturer's recommendations; including, but not limited to, substrate preparation and primer/sealer application to all wood surfaces (6-sides). Fasteners shall generally be type 304 stainless steel, but shall be type 316 for coastal applications. Install wood siding and shingle products over "Cedar Breather" by Benjamin Obdyke Inc. and 30# felts in accordance with manufacturer's instructions.
21. Coordinate all floor and wall framing with ductwork. Refer to mechanical notes.
22. Folding Attic Access Ladder shall be 22 ½" x 44" with self-trimming flange, pre-finished door panel, and gas-piston counterbalance. The door panel shall have continuous integral weatherstripping, R-10 insulation, and two key operated locking pins to draw the door tight. Ladder steps shall be pine, doweled to pine stringers. Contact Resource Conservation Technology at 410-366-1146. Additional insulation hood shall be provided to meet required insulation value per IECC R402.2.4.

RADON DETECTION AND TREATMENT
1. The Contractor shall provide a venting system consisting of a minimum of 3" diameter ABS, PVC or equivalent gas-tight plumbing pipe inserted into the sub-slab gravel base (at all new concrete slabs). A "T" fitting or equivalent method shall be used to ensure that the pipe opening remains with the sub-slab permeable material. The pipe shall terminate at least 12" above the high side of the roof penetration. Contractor shall coordinate location of pipe with Architect prior to installing the pipe.
2. Install, per IRC, 2018 edition, Appendix F "Radon Control Methods.'
3. The Contractor shall provide any other measures as required by local codes.

VENTILATION
1. Where attics are indicated to be ventilated, they are to be vented in one of the following ways (refer to drawings for specifics):
   A. Continuous ridge venting and continuous soffit venting. Ridge vent shall be by Cor-A-Vent or approved equal. Continuous screen soffit vents shall be a minimum of 2" wide. Circular louver vents between each rafter may be used at the soffit if shown on the drawings.
   B. Screen louvers or vents with an open area equal to one square foot for every 300 square feet of attic space.
2. Provide foundation vents for all crawl spaces. Refer to drawings for locations.
3. Venting for appliances and exhaust fans:
   A. Provide venting to the exterior as per manufacturer's recommendations for all appliances. Location of ductwork and vent on exterior shall be approved by Architect prior to installation.
   B. Provide exhaust fans for bathrooms, etc., as shown on drawings. Location of ductwork and vent on exterior shall be approved by Architect prior to installation. Ducts within unconditioned spaces shall be insulated to prevent condensation.
4. Provide Whole-House ventilation system to comply with IECC R403.4

MOISTURE PROTECTION
1. Appropriate sealants shall be selected for each substrate depending upon location (interior or exterior), humidity, moisture conditions, and traffic conditions. Use primers as required.
2. Color of caulking shall be coordinated with adjacent materials and must be approved by Architect prior to application.
3. Joint fillers shall be used:
   A. To control the depth of sealants in joints.
   B. To meet the requirements for resilient separations in horizontal joints in floor, pavements, patios, sidewalks, and other light traffic areas.
4. Bond breakers shall be used to prevent adhesion to more than two surfaces.
5. Masonry foundations shall be parged to a thickness of ¾" minimum.
6. Waterproof all below grade foundation walls with a polymer-modified asphalt emulsion similar to CETCO "Strataseal." Dry/ cured membrane thickness shall be minimum 60 mil. Installation and substrate preparation shall be per manufacturer's recommendations. Reinforce corners and concrete cold joints by embedding fiberglass fabric around corners and across joints in accordance with manufacturer's recommendations. Install subsurface drainage composite similar to CETCO "Aquadrain IOX" over the cured membrane.
7. Footing drains shall be min. 4" in diameter and installed on the exterior of all foundations.
8. All flashing shall be installed according to the building code. An eave flashing strip of 40 mil. self-adhering rubberized asphalt sheet membrane shall be applied to extend from the edge of the roof to a point 24" min. inside the interior wall line of the structure, and at all valleys.
9. All membrane roofing to be approved by Architect prior to installation.
10. All roof shingles to be approved by Architect prior to installation.
11. Asphalt shingle roofs with slopes from 2 in 12 to 4 in 12 shall have two layers of #15 roofing felt applied in accordance with with the International Residential Code.
12. Flashing"
   A. Through-wall and other concealed flashing shall be a composite of fiberglass fabric, 5 oz. copper and asphalt, equal to York Copper Fabric.
   B. Exposed flashing shall be 16 oz. copper.
13. Painted aluminum drip strips shall be installed at the eave and rake edges of the roof sheathing for shingle roofs, and above window and door trim where indicated.
14. Exterior Insulation and Finish Systems (EIFS) shall be equal to Dryvit, Residential MD System, with Dryvit drainage mat installed between the secondary weather barrier and the insulation board.
15. Cedar roof shingles shall be No. 1, Blue Label, red cedar. Install over "Cedar Breather" by Benjamin Obdyke Inc. and 30# felts in accordance with manufacturer's instructions.
16. Standing seam roofing shall be 16 ounce copper with water-tight standing seams. For slopes greater than 3 in 12 provide #30 roofing felt underlayment on solid sheathing. For slopes 3 in 12 or less provide self-adhering 40 mil ice and water guard membrane over the entire area to receive standing seam roofing.

FINISHES
Gypsum Wallboard:
1. Gypsum wallboard shall be ASTM C-36 as follows:
   A. Regular (5/8"): except where noted.
   B. Water resistant (5/8"): at bathroom ceilings and walls that are not tiled.
   C. Durock interior tile backer board (5/8"): at all surfaces that have tile.
2. Gypsum boards shall have tapered edges to accommodate joint reinforcement.
3. Provide edge corner beads, trim, taping, and joint compounds as required for the proper completion of the job. Materials shall be by U.S. Gypsum or approved equal.
4. Finishing requirements:
   A. For typical walls and ceilings provide a Level 4 Finish as defined by the Gypsum Association.
   B. For surfaces noted to receive semi-gloss or gloss paint provide a Level 5 Finish as defined by the Gypsum Association.

Hardwood Flooring:
1. Unless noted otherwise, provide wood strip flooring where shown on the drawings.
2. Wood strip flooring to be oak. Where abutting existing floor, new floor shall match existing in size and grain. Elsewhere, oak shall be "clear" grade, in accordance with the national Oak Flooring Manufacturer's Association.
3. Install flooring in strict accordance with the recommendation of the National Oak Flooring Manufacturer's Association.
4. After the floors have been sanded, the flooring contractor shall apply a minimum of four stain and urethane samples in two foot by two foot areas on the floor for the owner to review. The owner shall have a minimum of two days to make a selection.

Ceramic Tile:
1. Provide ceramic tile and accessories in accordance with the Tile Council of American Specifications 137.1, in colors and patterns to be specified by the owner.
2. Setting materials: comply with pertinent recommendations contained in the Tile Council of America "Handbook for Ceramic Tile Installation."
3. Installation: comply with ANSI A108.1, ANSI A108.2, and the "Handbook for Ceramic Tile Installation" of the Tile Council of America.
   A. Extend tile into recesses and under equipment and fixtures to form a complete covering without interruptions.
   B. Terminate tile neatly at obstruction, edges, and corners, without disruption of pattern or joint alignment.
   C. Align joints when adjoining tiles on floor, base, trim, and walls are the same size.
   D. Layout tile work and center the tile fields in both directions in each space or on each wall area.
4. Replacement reserve: Contractor shall furnish to the Owner one unopened box of additional tiles for future repairs and maintenance work.

Carpet:
1. Provide carpeting as indicated on the drawings. Refer to allowances on schedule sheet.

Vinyl Tile:
1. Installation of all vinyl composition tile (VCT) shall be done in a manner which conforms with:
   ASTM E 648,
   ASTM E 84, AND
   ASTM E 662.
2. Replacement reserve: Contractor shall furnish Owner with one unopened box of additional tile for future repairs and maintenance.

Paint:
1. All paint and primers to be Benjamin Moore or approved equal. Refer to schedule for colors and types.
2. All surfaces to be painted shall receive one primer coat and two finish coats.
3. All paint shall be applied according to manufacturer's recommendations.

Architectural Woodwork and Trim:
1. All millwork trim and molding shall be installed accordingly to the quality of standards of the Architectural Woodwork Institute (AWI).
2. All interior trim and millwork shall conform to AWI "custom standards."
3. Flat trim shall be clear pine or approved equal.
4. All corners of trim and siding are to be mitered, except inside corners of interior running trim which shall be coped. Exposed end grains will not be accepted.
5. All millwork and trim shall be installed by craftsmen with experience in work of this type. All work shall be first class in every regard and consistent with the best practices of the trade.

FIRE AND LIFE SAFETY
1. Stairs:
   A. 7¾" max rise
   B. 10" min tread
   C. 6'-8" min head room
   D. Height of handrails shall be continuous, 34" (min) to 38" (max) above finished stair treads. Handrails required at stairs with 3 or more risers.
   E. Guardrails shall be 36" (min) to 42" (max) above finished floor.
2. Provide a clear window opening of 5.7 square feet with no less than 20" clear wide and 24" clear high for sleeping area. The sill of this windows shall be no more than 44" above the finished floor.
3. Provide safety glass in all exterior doors, storm doors, sliding glass doors, shower doors, and tub enclosures above and adjacent to spas and tubs and where the glass is closer than 18" to the floor and exceeds 9 square feet in area.
4. Ground metal siding.
5. Smoke detectors shall be provided on every floor, in each bedroom and in each hall outside of bedrooms, and integrated with the electrical system with battery backup.
6. If a fuel-burning appliance, fireplace, or attached garage is present, an interconnected battery back up carbon monoxide alarm or detector must be installed outside all sleeping areas and on all floors. If fuel-burning appliance or fireplace is present in any sleeping area, an interconnected carbon monoxide alarm or detector must also be installed in that room as required per local jurisdiction.
7. Flues shall be class B except solid fuel flues, which shall be class A.
8. Top of flue shall be 2'-0" above any part of structure within 10'-0" of flue.
9. Interior finish of walls and ceiling shall have a flame spread rating not greater than Class III.
10. Carpeting shall meet federal regulation DOC FF-1.
11. Prefab fireplaces shall be (U.L.) rated and installed according to manufacturer's specifications.
12. Provide outside air for combustion in all prefab and masonry fireplaces.

ELECTRICAL AND LIGHTING NOTES
1. Electrical contractor shall size and arrange all circuits in accordance with the National Electric Code as well as all local codes. Service to be upgraded as required.
2. Wall outlets are to be mounted 1'-6" above finished floor unless noted otherwise.
3. Switches are to be mounted 4'-0" above finished floor unless noted otherwise.
4. Mounting heights are to the vertical center of the equipment to the finished elevation of the floor.
5. All new switch and outlet styles are to be approved by Owner prior to installation.
6. Provide hardwired smoke detectors on all floors, located as per Montgomery County Code.
7. Electrician shall locate all fixtures, switches, outlets, etc. prior to running wiring. Owner, Architect, and Electrician to meet at a mutually agreed upon time to review locations. The purpose of which is to allow for possible relocation prior to wiring.
8. Owner is allowed to add an additional ten (10) items (switches, cable, phone, outlet, etc., or any combination) at no additional charge to the owner.
9. Contractor shall determine, based on an on-site review of existing and proposed electrical systems, whether an electrical service heavy-up will be required, and shall include the costs of all required upgrades in their Contract Amount.
10. Provide door bell, transformer, and chime for front door and where indicated. In lieu of Owner's selection otherwise, price shall be based on the following: Illuminated Button - Destination Lighting product number 15921; Transformer - 16V; Chimes - Teiber Model CTSB-or STPW-, in Owner's choice of finish. Verify all selections and mounting locations with Owner prior to purchasing.
11. Per IECC R404.1 90% of installed lighting fixtures must contain high efficacy lamps.

MECHANICAL NOTES
1. All work shall be done in accordance with the International Residential Code (IRC), 2018 Edition, as well as IECC 2018 and other local codes.
2. Contractor shall submit all duct layouts and air handler locations (and thermostat locations) to the Owner and the Architect for approval prior to the commencement of framing. No extras will be given for any modification required to the framing due to ductwork.
3. All exterior unit locations to be coordinated with Owner and Architect.
4. Air conditioners shall be Energy Star rated and shall have a minimum 13 SEER rating with two zones each. Gas furnaces shall have a minimum Annual Fuel Utilization Efficiency rating of 90%.
5. Equipment will be Carrier or approved equal.
6. Ductwork will be galvanized sheet metal and flex.
7. Registers and return grilles are Hart & Cooley or equal.

PLUMBING NOTES
1. All work shall be done in accordance with the International Residential Code (IRC), 2018 Edition, as well as IECC 2018 and other local codes.
2. Contractor shall provide riser diagrams as required for permit, and shall submit to the Architect proposed locations of all waste and supply lines prior to the commencement of framing. No extras will be given for any modification required to the framing due to plumbing lines. Provide cast iron at vertical waste lines.
3. Install water heater and reserve tank per requirements of the house with recirculate system.
4. Provide drain pans under all water heaters and washing machines, and pipe the pan to the sanitary drain upstream of a trap.
5. Contractor shall make a count of existing and proposed fixtures to determine whether a water or sewer upgrade will be required, and shall include the costs of all required upgrades in his Contract Amount. The count of existing fixtures shall be based on an on-site inspection.
6. Provide cast iron at vertical waste lines.
7. Locate plumbing clean out plugs in bottom ½" of wall, typical.

STEAM SHOWER
1. Wall construction: Provide ceramic tile over dryset or latex Portland cement mortar bond coat over tile backer board over Dow insulation board over 2x4 studs.
2. Ceiling construction: Same as walls, provide continuous sloped ceiling (½" per foot), and provide rounded inside corner tile at joint between wall and ceiling.
3. Insulate all walls, ceiling, and floor adjacent to steam shower.
4. Steam shower to be watertight, including a watertight shower door.
5. Steam Unit: "Mr. Steam model #MS-150, 6kw or approved equal. Provide the following connections: water inlet ⅜" NPT, steam outlet NPT, drain ⅜" NPT. Follow all manufacturer's specifications.

ROOFTOP-MOUNTED PHOTOVOLTAIC SYSTEMS
1. Structural support for all rooftop-mounted photovoltaic systems and other considerations shall comply with 2018 IRC Section R324.4

STATIONARY STORAGE BATTERY SYSTEMS
1. The installation of battery storage systems shall comply with 2018 IRC Section R327

GTM ARCHITECTS
7735 OLD GEORGETOWN ROAD
SUITE 700
BETHESDA, MD 20814
(240)333-2000
(240)333-2001 FAX
WWW.GTMARCHITECTS.COM

Seal

STATE OF MARYLAND — JAMES A. GRAHAM III — No. 30000 — ARCHITECT

I certify that these documents were prepared or approved by me, and that I am a duly licensed architect under the laws of the State of Maryland, license number 30000, Expiration Date: 12-06-2024.

Consultant

Project
3929 WASHINGTON ST
3929 WASHINGTON ST. KESINGTON, MD 20895

Owner
TOM AND MAGGIE McCULLOUGH

Developer

PERMIT SET	09-29-2023
PERMIT SET PROGRESS SET	08-29-2023
D.D. ELECTRICAL & LIGHTING SET	08-10-2023
DESIGN DEV'T PROGRESS SET	07-24-2023
Issue Description	*Date*

GTM Project No.	23.0187
Checked By	GTM/ RJV
Drawn By	RJV/ CCM
Scale	AS NOTED

Sheet Title
SPECIFICATIONS

Sheet No.
002

DOOR SCHEDULE

* CONFIRM DOOR MANUFACTURER, LINE & PANEL CONFIGURATION W/ OWNER PRIOR TO ORDER.

DOOR				FRAME					HARDWARE	REMARKS
NO.	SIZE	MATERIAL	MANUF.	MAT:	FIN:	HEAD	JAMB	SILL		
BASEMENT										
1	3^0 x 7^0 x1 3/4"	SOLID CORE HORIZONTAL PANEL	TRUSTILE OR EQUAL						H-4	
2	2^4 x 7^0 x1 3/4"	SOLID CORE HORIZONTAL PANEL	TRUSTILE OR EQUAL						H-3	
3	2^4 x 7^0 x1 3/4"	SOLID CORE HORIZONTAL PANEL	TRUSTILE OR EQUAL						H-3	
3A	2^4 x --	GLASS	T.B.D.						-	TEMPERED SHOWER DOOR
4	2^6 x 7^0 x1 3/4"	SOLID CORE HORIZONTAL PANEL	TRUSTILE OR EQUAL						H-3	
5	1 PAIR 2^6 x 6^6 x1 3/4"	SOLID CORE HORIZONTAL PANEL	TRUSTILE OR EQUAL						H-5	
6	3^0 x 7^0 x1 3/4"	SOLID CORE HORIZONTAL PANEL	TRUSTILE OR EQUAL						H-4	
7	3^0 x 7^0 x -	GLASS	T.B.D.						BY MANUF.	TEMPERED EXERCISE ROOM DOOR
8	3^6 x 6^{10} x1 3/4"	CLAD/ WOOD, GLASS	PELLA						H-2	
FIRST FLOOR										
9	4 PANEL 3^0 x 8^0 x1 3/4"	CLAD/ WOOD, GLASS	PELLA 14196						H-2	FOUR PANEL SLIDING_ - FIXED/ ACTIVE/ACTIVE/FIXED (OXXO)
10	1 PAIR 3^0 x 8^0 x1 3/4"	WOOD, GLASS	T.B.D.						H-1	CUSTOM ENTRY DOORS
11	2^6 x 8^0 x1 3/4"	SOLID CORE HORIZONTAL PANEL	TRUSTILE OR EQUAL						H-4	
12	3^0 x 8^0 x1 3/4"	CLAD/ WOOD, GLASS	PELLA						H-2	IN-SWING FRENCH DOOR
12A	3^0 x 8^0 x1 3/4"	WOOD, GLASS	T.B.D.						H-1	CUSTOM ENTRY DOOR
12B	3^0 x 8^0 x1 3/4"	WOOD, GLASS	T.B.D.						H-1	CUSTOM ENTRY DOOR
13	2^6 x 8^0 x1 3/4"	SOLID CORE HORIZONTAL PANEL	TRUSTILE OR EQUAL						H-4	
14	2^6 x 8^0 x1 3/4"	SOLID CORE HORIZONTAL PANEL	TRUSTILE OR EQUAL						H-4	
15	2^4 x 8^0 x1 3/4"	SOLID CORE HORIZONTAL PANEL	TRUSTILE OR EQUAL						H-6	POCKET DOOR
16	3^0 x 7^0 x1 3/4"	SOLID CORE HORIZONTAL PANEL	TRUSTILE OR EQUAL						H-1	20 MIN. FIRE RATED; W/ SELF CLOSING HINGES
17	18^0 x 8^0 x ---	WOOD, GLASS	T.B.D.						BY MANUF.	CARRIAGE STYLE GARAGE DOOR
18	3^0 x 8^0 x ---	WOOD, SCREENING	T.B.D.						BY MANUF.	CUSTOM MADE SCREENING DOOR
SECOND FLOOR										
19	2^6 x 7^0 x1 3/4"	SOLID CORE HORIZONTAL PANEL	TRUSTILE OR EQUAL						H-4	
20	2^6 x 7^0 x1 3/4"	SOLID CORE HORIZONTAL PANEL	TRUSTILE OR EQUAL						H-3	
21	3^0 x 7^0 x1 3/4"	SOLID CORE HORIZONTAL PANEL	TRUSTILE OR EQUAL						H-4	
22	2^4 x 7^0 x1 3/4"	SOLID CORE HORIZONTAL PANEL	TRUSTILE OR EQUAL						H-3	
23	2^4 x 7^0 x1 3/4"	SOLID CORE HORIZONTAL PANEL	TRUSTILE OR EQUAL						H-4	
24	2^4 x 7^0 x1 3/4"	SOLID CORE HORIZONTAL PANEL	TRUSTILE OR EQUAL						H-3	
24A	2^4 x --	GLASS	T.B.D.						-	TEMPERED SHOWER DOOR
25	3^0 x 7^0 x1 3/4"	CLAD/ WOOD, GLASS	PELLA						H-2	IN-SWING FRENCH DOOR
26	2^6 x 7^0 x1 3/4"	SOLID CORE HORIZONTAL PANEL	TRUSTILE OR EQUAL						H-3	
27	2^6 x 7^0 x1 3/4"	SOLID CORE HORIZONTAL PANEL	TRUSTILE OR EQUAL						H-4	
28	2^4 x 7^0 x1 3/4"	SOLID CORE HORIZONTAL PANEL	TRUSTILE OR EQUAL						H-3	
28A	2^4 x --	GLASS	T.B.D.						-	TEMPERED SHOWER DOOR
29	2^0 x 7^0 x1 3/4"	SOLID CORE HORIZONTAL PANEL	TRUSTILE OR EQUAL						H-3	
30	2^6 x 7^0 x1 3/4"	SOLID CORE HORIZONTAL PANEL	TRUSTILE OR EQUAL						H-3	
31	2^4 x 7^0 x1 3/4"	SOLID CORE HORIZONTAL PANEL	TRUSTILE OR EQUAL						H-3	
										CONTINUE .....

NOTE: ALL INTERIOR DOORS TO BE JELD-WEN "CAMBRIDGE" MOLDED INTERIOR PASSAGE DOORS WITH A SMOOTH SURFACE, OVOLO STICKING UNLESS O.W.N.; CONFIRM SELECTION W/ OWNER

DOOR SCHEDULE (CONT.)

* CONFIRM DOOR MANUFACTURER, LINE & PANEL CONFIGURATION W/ OWNER PRIOR TO ORDER.

DOOR				FRAME					HARDWARE	REMARKS
NO.	SIZE	MATERIAL	MANUF.	MAT:	FIN:	HEAD	JAMB	SILL		
SECOND FLOOR (CONT.)										
31A	2^4 x --	GLASS	T.B.D.						-	TEMPERED SHOWER DOOR
32	2^6 x 7^0 x1 3/4"	SOLID CORE HORIZONTAL PANEL	TRUSTILE OR EQUAL						H-4	
33	2^6 x 4^0 x1 3/4"	SOLID CORE HORIZONTAL PANEL	TRUSTILE OR EQUAL						H-4	
34	2^6 x 4^0 x1 3/4"	SOLID CORE HORIZONTAL PANEL	TRUSTILE OR EQUAL						H-4	
35	2^6 x 7^0 x1 3/4"	SOLID CORE HORIZONTAL PANEL	TRUSTILE OR EQUAL						H-4	

HARDWARE SCHEDULE

(CONFIRM W/ OWNER PRIOR TO ORDERING)

NOTE: ALL HARDWARE TO BE SCHLAGE F-SERIES OR APPROVED EQUAL (EXCEPT FRENCH DOORS, WHICH ARE TO HAVE STANDARD HARDWARE BY MANUFACTURER)

H-1	DOUBLE CYLINDER ENTRANCE LOCK, DEADBOLT
H-2	MANUFACTURER STANDARD LOCKSET, FINISH T.B.D.
H-3	BED/BATHROOM PRIVACY LOCK
H-4	PASSAGE SET
H-5	BALL CATCHES $ DUMMY KNOBS
H-6	POCKET DOOR LOCKSET

APPROVED
Montgomery County
Historic Preservation Commission

REVIEWED
By Dan.Bruechert at 3:51 pm, Dec 18, 2023

WINDOW SCHEDULE

* BASED ON PELLA RESERVE CLAD-WOOD WINDOWS; CONFIRM W/ OWNER
* CONTACT WINDOW INSTALLER FOR ROUGH OPENING DIMENSIONS

#	TYPE	QTY.	MANUF.	CAT. NO.	FRAME SIZE	GLASS	REMARKS
001	CASEMENT	1	PELLA	2959	2'-5" x 4'-11"	INSULATED LOW-E 366	SEE ELEVS. FOR GRILLE PATTERN
002	CASEMENT	2	PELLA	2929	2'-5" x 2'-5"	INSULATED LOW-E 366	SEE ELEVS. FOR GRILLE PATTERN
003				NOT USED			
101	CASEMENT	8	PELLA	2971	2'-5" x 5'-11"	INSULATED LOW-E 366	SEE ELEVS. FOR GRILLE PATTERN
102	CASEMENT	1	PELLA	2929	2'-5" x 2'-5"	INSULATED LOW-E 366	SEE ELEVS. FOR GRILLE PATTERN
103	CASEMENT	2	PELLA	2571	2'-1" x 5'-11"	INSULATED LOW-E 366	SEE ELEVS. FOR GRILLE PATTERN
104	FIXED CASEMENT	1	PELLA	2571	2'-1" x 5'-11"	INSULATED LOW-E 366	SEE ELEVS. FOR GRILLE PATTERN
105	CASEMENT	2	PELLA	1771	1'-5" x 5'-11"	INSULATED LOW-E 366	SEE ELEVS. FOR GRILLE PATTERN
106	CASEMENT	4	PELLA	2959	2'-5" x 4'-11"	INSULATED LOW-E 366	SEE ELEVS. FOR GRILLE PATTERN
107	FIXED CASEMENT	1	PELLA	2959	2'-5" x 4'-11"	INSULATED LOW-E 366	SEE ELEVS. FOR GRILLE PATTERN
108	CASEMENT	2	PELLA	2559	2'-1" x 4'-11"	INSULATED LOW-E 366	SEE ELEVS. FOR GRILLE PATTERN
109	FIXED CASEMENT	1	PELLA	2559	2'-1" x 4'-11"	INSULATED LOW-E 366	SEE ELEVS. FOR GRILLE PATTERN
110	CASEMENT	2	PELLA	1759	1'-5" x 4'-11"	INSULATED LOW-E 366	SEE ELEVS. FOR GRILLE PATTERN
201	CASEMENT	11	PELLA	2959	2'-5" x 4'-11"	INSULATED LOW-E 366	SEE ELEVS. FOR GRILLE PATTERN
202	FIXED CASEMENT	1	PELLA	2959	2'-5" x 4'-11"	INSULATED LOW-E 366	SEE ELEVS. FOR GRILLE PATTERN
203	CASEMENT	5	PELLA	2953	2'-5" x 4'-5"	INSULATED LOW-E 366	SEE ELEVS. FOR GRILLE PATTERN
204	FIXED CASEMENT	1	PELLA	2953	2'-5" x 4'-5"	INSULATED LOW-E 366	SEE ELEVS. FOR GRILLE PATTERN
205	CASEMENT	1	PELLA	2941	2'-5" x 3'-5"	INSULATED LOW-E 366	SEE ELEVS. FOR GRILLE PATTERN
206	PICTURE CASEMENT	2	PELLA	2993	2'-5" x 7'-9"	INSULATED LOW-E 366	SEE ELEVS. FOR GRILLE PATTERN
301	FIXED CASEMENT	1	PELLA	2929	2'-5" x 2'-5"	INSULATED LOW-E 366	SEE ELEVS. FOR GRILLE PATTERN

GENERAL WINDOW NOTES:

1. ALL OPERABLE WINDOWS TO HAVE SCREENS (CONFIRM SCREEN FRAME COLOR W/ OWNER).
2. ALL WINDOWS TO BE ALUMINUM CLAD EXTERIOR, PRE-PRIMED INTERIOR.
3. CONFIRM HARDWARE FINISH W/ OWNER PRIOR TO ORDER.
4. ALL GLAZING TO BE DOUBLE PANED, LOW E 366, CLEAR INSULATED.
5. CONFIRM OVERALL WINDOW SCHEDULE W/ ARCHITECT PRIOR TO ORDER.
6. ALL WINDOWS & GLASS DOORS TO BE SIMULATED DIVIDED LITE, 7/8" MUNTIN. SEE ELEVATIONS FOR MUNTIN CONFIGURATIONS.
7. CONFIRM JAMB LINER COLOR W/ OWNER.
8. GANGED WINDOWS SHALL HAVE WINDOW MFR. SUPPLIED EXTERIOR MULL COVERS.
9. PROVIDE EGRESS HARDWARE IN EGRESS WINDOWS AS REQUIRED.
10. SEE ELEVATIONS & SECTIONS FOR TYPICAL HEAD HEIGHTS ABOVE SUBFLOOR.
11. PROVIDE SAFETY GLASS AT ENTRIES, STAIRS, OVER BATHTUBS & ELSEWHERE AS REQUIRED BY CODE (IRC 2015).
12. IN ACCORDANCE WITH IRC 2018, SECTION R312, ALL WINDOWS HAVING AN OPENING LESS THAN 24" ABOVE THE FLOOR AND THAT ARE LOCATED SUCH THAT THE DIMENSION FROM THE BOTTOM OF THE OPENING TO THE EXTERIOR SURFACE BELOW EXCEEDS 72", SHALL EITHER HAVE A STOP TO LIMIT THE OPENING TO LESS THAN 4" OR SHALL HAVE GUARDS INSTALLED THAT WOULD PREVENT THE PASSAGE OF A 4" SPHERE. IN THE CASE OF AN EGRESS WINDOW, THE GUARD MUST BE REMOVABLE WITHOUT SPECIAL KNOWLEDGE OR TOOLS. GUARD SHALL BE EQUAL TO THOSE MANUFACTURED BY THE GUARDIAN ANGEL CO.
13. CONTRACTOR TO CONFIRM ALL ROUGH OPENING DIMENSIONS W/ WINDOW MANUFAC. PRIOR TO FRAMING.

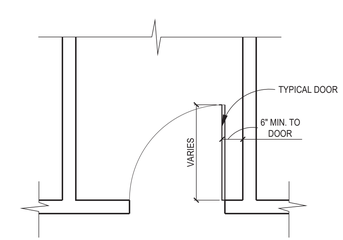

1 STANDARD DOOR LOCATION
SCALE: 1/2"=1'-0"

R06-052 (1X1)

GTM ARCHITECTS

7735 OLD GEORGETOWN ROAD
SUITE 700
BETHESDA, MD 20814
(240)333-2000
(240)333-2001 FAX
WWW.GTMARCHITECTS.COM

Seal

I certify that these documents were prepared or approved by me, and that I am a duly licensed architect under the laws of the State of Maryland, license number 6305. Expiration Date: 12-06-2024

Consultant

Project
3929 WASHINGTON ST
3929 WASHINGTON ST. KESINGTON, MD 20895

Owner
TOM AND MAGGIE McCULLOUGH

Developer

Issue Description	Date
PERMIT SET	09-29-2023
PERMIT SET PROGRESS SET	08-29-2023
D.D. ELECTRICAL & LIGHTING SET	08-10-2023
DESIGN DEV'T PROGRESS SET	07-24-2023

GTM Project No.	23.0187
Checked By	GTM/ RJV
Drawn By	RJV/ CCM
Scale	AS NOTED

Sheet Title
DOOR, WINDOW & HARDWARE SCHEDULES

Sheet No.
003

FILE NAME:

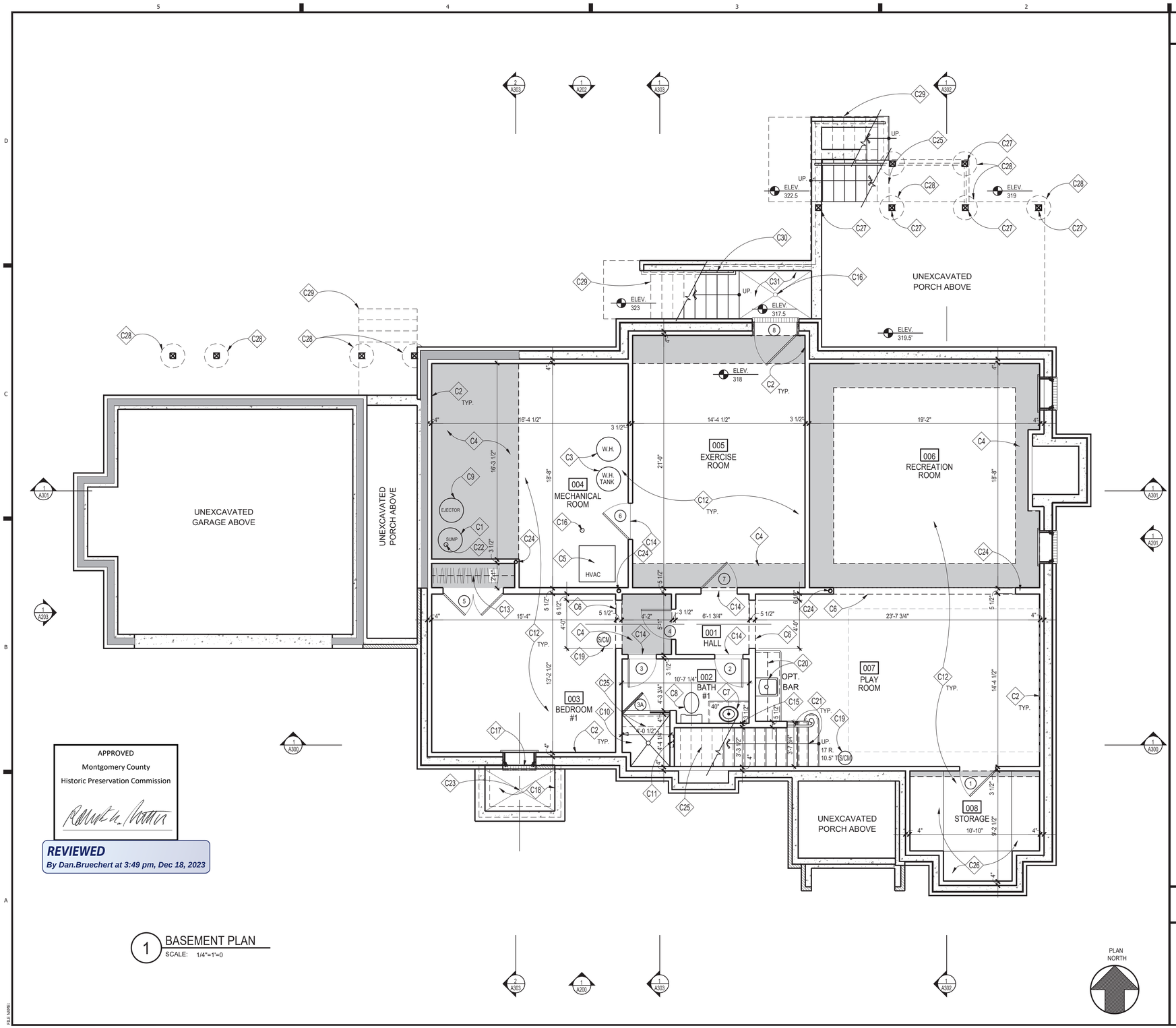

APPROVED
Montgomery County
Historic Preservation Commission

REVIEWED
By Dan.Bruechert at 3:49 pm, Dec 18, 2023

1 BASEMENT PLAN
SCALE: 1/4"=1'=0

CONSTRUCTION NOTES

- C1 SUMP PUMP WITH WATER POWERED SUMP BACKUP, LOCATION, T.B.D.
- C2 FUR OUT WALLS W/ FULL 2x4's W/ R-15 BATT INSULATION. PROVIDE P.T. SILL; HOLD 1/2" OFF MASONRY WALL
- C3 HOT WATER HEATER, T.B.S.
- C4 TONED AREA INDICATES LOWERED CEILING TO ALLOW FOR DUCTWORK, V.I.F.
- C5 HVAC UNIT
- C6 CASED OPENING @ 7'-0" FINISHED (7'-2", ROUGH OPN'G. HGT.)
- C7 VANITY W/ SINK FAUCET & COUNTERTOP; T.B.S.
- C8 PLUMBING FIXTURE, T.B.S.
- C9 EJECTOR PUMP. LOCATION T.B.D. (F.V.)
- C10 CUSTOM PAN FORMED TILE SHOWER, W/ GLASS ENCLOSURE T.B.S., PROVIDE MEMBRANE LINER & 1/2" DUROCK AROUND ALL SIDES. SEE 3 & 8/A305
- C11 12"Wx14"H TILED RECESS W/ SLOPED SILL @ 42" A.F.F.
- C12 REINF. CONC. SLAB ON GRADE; SEE FOUNDATION PLAN, SHEET S100
- C13 CLOSET ROD & SHELF, TYP.
- C14 MARBLE THRESHOLD OR TRANSITION FLOORING STRIP, T.B.S.
- C15 1/4" PLATE GLASS MIRROR FROM TOP OF SPLASH TO 7'-0; FULL WIDTH OF VANITY
- C16 FLOOR DRAIN; DRAIN TO SUMP PUMP
- C17 EGRESS WINDOW; MAX. 44" SILL HEIGHT FROM A.F.F.
- C18 WINDOW WELL; SEE DETAIL 2/A302
- C19 HARDWIRED SMOKE/ CARBON MONOXIDE DETECTOR PER I.R.C. ABOVE (CEILING MOUNTED)
- C20 WET BAR CABINETS, APPLIANCES + COUNTER TOPS, ETC. T.B.S. COORDINATION W/ INTERIOR & KITCHEN DESIGNERS
- C21 WD. STEPS: 1x RISERS W/ TREADS TO MATCH HARDWOOD FLOOR; RAILING T.B.S.; SEE DETAILS 1,2,3,7 A/ 306
- C22 RADON PIPE, SEE SPECIFICATION SHEET
- C23 WINDOW WELL DRAIN TO DAYLIGHT OR TIE INTO FOUNDATION DRAINAGE SYSTEM
- C24 STEEL COLUMN, SEE FOUNDATION AND FRAMING PLANS
- C25 DASHED LINES SHOWN STEPS ABOVE
- C26 (5) EQUALLY SPACED SHELVES, PTD.
- C27 P.T. POST, SEE FRAMING PLANS
- C28 FOOTING, SEE FOUNDATION PLAN
- C29 STAIRS PROJECTION ABOVE
- C30 IRON RAILING, T.B.S.
- C31 AREA WAY; SEE DETAIL 11/A305

NOTE:

1. UNLESS INDICATED OTHERWISE, DIMENSIONS ARE TO FACE OF FRAMING
2. FILL CAVITY WITH MINERAL WOOL IN WALLS, CEILING, + FLOOR OF THE FOLLOWING ROOMS (U.N.O.): '002' BATH #1 '004' MECHANICAL RM
3. VERIFY ALL EXTERIOR RISER + TREAD DIMENSIONS IN THE FIELD

WALL TYPES

TYPICAL NEW EXTERIOR WALL; 12" CONC. WALL; SEE FOUNDATION PLAN, SHEET S1.0; FUR WHERE SHOWN W/ 2x4 STUDS @ 16" O.C., R-15 BATT. INSUL. & 1/2" GYP. BD.

TYPICAL NON-BEARING INTERIOR PARTITION; 2"x4" STUDS 16" O.C. W/ 1/2" GYP. BD. EACH SIDE; INCREASE WALL THICKNESS AS SHOWN TO ALIGN FINISHES WHERE SHOWN.

GTM ARCHITECTS

7735 OLD GEORGETOWN ROAD
SUITE 700
BETHESDA, MD 20814
(240)333-2000
(240)333-2001 FAX
WWW.GTMARCHITECTS.COM

Seal

I certify that these documents were prepared or approved by me, and that I am a duly licensed architect under the laws of the State of Maryland, license number 6305. Expiration Date: 12-06-2024

Consultant

Project
3929 WASHINGTON ST
3929 WASHINGTON ST. KESINGTON, MD 20895

Owner
TOM AND MAGGIE McCULLOUGH

Developer

Issue Description	Date
PERMIT SET	09-29-2023
PERMIT SET PROGRESS SET	08-29-2023
D.D. ELECTRICAL & LIGHTING SET	08-10-2023
DESIGN DEV'T PROGRESS SET	07-24-2023

GTM Project No.	23.0187
Checked By	GTM/ RJV
Drawn By	RJV/ CCM
Scale	AS NOTED

Sheet Title
BASEMENT PLAN

Sheet No. A100

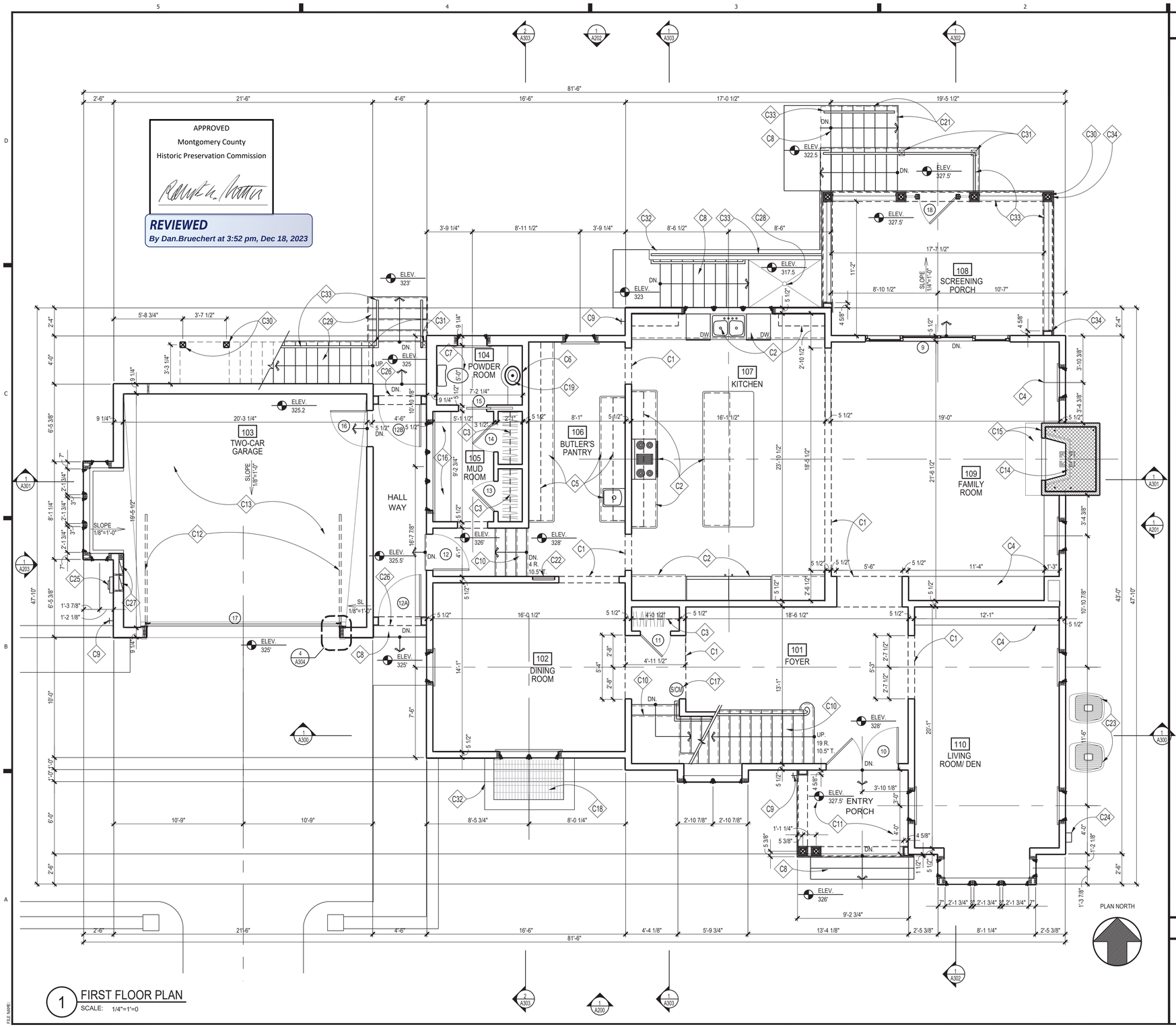

1 FIRST FLOOR PLAN
SCALE: 1/4"=1'=0

CONSTRUCTION NOTES

- C1 CASED OPENING; 8'-0" FINISHED (8'-2". ROUGH OPN'G. HGT.)
- C2 KITCHEN CABINETS, APPLIANCES + COUNTER TOPS, ETC. T.B.S. COORDINATE WITH KITCHEN DESIGNER
- C3 PROVIDE 1 1/2" DIA. ROD AND 12" DEEP SHELF
- C4 BUILT-INS; SEE INTERIOR ELEVATIONS
- C5 BUTLER'S PANTRY CABINETS,, APPLIANCES + COUNTER TOPS, ETC. T.B.S., COORDINATE WITH KITCHEN DESIGNER
- C6 1/4" POLISHED PLATE GLASS MIRROR T.B.S. BY OWNER AND INSTALLED BY CONTRACTOR.
- C7 PLUMBING FIXTURES, & ACCESSORIES PER OWNER
- C8 2" FLAGSTONE STEPS TO GRADE, F.V. RISE & RUN
- C9 FROST PROOF HOSE BIB BELOW; CONFIRM LOCATION W/ OWNER
- C10 WD. STEPS: 1x RISERS W/ TREADS TO MATCH HARDWOOD FLOOR; RAILING T.B.S.; SEE DETAILS 1,2,3,7A306
- C11 2" FLAGSTONE PAVERS; COLOR, SIZE & PATERN T.B.S. BY OWNER
- C12 AUTO-GARAGE DOOR TRACKS ABOVE
- C13 FINISH INTERIOR WALLS AND CEILING OF GARAGE WITH 5/8" TYPE "X" GYP. BOARD, PTD.
- C14 WOOD BURNING FIREPLACE WITH GAS LOGS
- C15 HEARTH & SURROUND T.B.S.
- C16 CUSTOM BENCH, SEE INTERIOR ELEVATIONS
- C17 HARDWIRED SMOKE/ CARBON MONOXIDE DETECTOR PER I.R.C. ABOVE (CEILING MOUNTED)
- C18 WINDOW WELL GRATE BELOW, SEE 11/A305
- C19 VANITY W/ SINK FAUCET & COUNTERTOP; T.B.S.
- C20 IRON RAILING SYSTEM, T.B.S.
- C21 LINE OF WALL BELOW
- C22 HVAC RETURN, CONFIRM LOCATION W./ OWNER
- C23 PROPOSED LOCATION FOR HVAC COMPRESSOR UNITS
- C24 GAS METER
- C25 ELECTRICAL METER
- C26 ARCHED CASED OPENING; SEE ELEVATIONS
- C27 ELECTRICAL DISTRIBUTION PANELS
- C28 FLOOR DRAIN, RUN TO SUMP PUMP
- C29 FRAMED WOOD STEPS, WITH COMPOSITE TREADS AND RISERS, T.B.S.
- C30 P.T. POST, SEE FRAMING PLANS
- C31 P.T. POST BELOW, SEE FRAMING PLANS
- C32 2" SLOPED FLAGSTONE CAP
- C33 COMPOSITE RAILING T.B.S.
- C34 STAINED BUILT UP COLUMNS AND PILASTERS, SEE ELEVATIONS

NOTE:

1. UNLESS INDICATED OTHERWISE, DIMENSIONS ARE TO FACE OF FRAMING
2. VERIFY ALL EXTERIOR RISER + TREAD DIMENSIONS IN THE FIELD
3. ENTIRE ADD'N TO HAVE NEW TRIM, BASE, ETC. TO MATCH EXT'G.
4. PROVIDE MINERAL WOOL AND FILL CAVITIES IN WALLS, CEILING, + FLOOR OF THE FOLLOWING ROOMS (U.N.O.): '104' POWDER ROOM

WALL TYPES

TYPICAL EXTERIOR WALL; 2x6 WOOD STUDS 16" O.C., W/ R-21 INSULATION & W/ VAPOR BARRIER, 1/2" OSB SHEATHING, TYVEK BUILDING WRAP, SIDING SEE ELEVATIONS. INTERIOR FINISH TO BE GYP. BD. (1/2").

TYPICAL NON-BEARING INTERIOR PARTITION; 2"x4" STUDS 16" O.C. W/ 1/2" GYP. BD. EACH SIDE, INCREASE WALL THICKNESS AS SHOWN TO ALIGN FINISHES WHERE SHOWN.

GTM ARCHITECTS
7735 OLD GEORGETOWN ROAD
SUITE 700
BETHESDA, MD 20814
(240)333-2000
(240)333-2001 FAX
WWW.GTMARCHITECTS.COM

Seal

I certify that these documents were prepared or approved by me, and that I am a duly licensed architect under the laws of the State of Maryland, license number 6365, Expiration Date: 12-06-2024.

Consultant

Project
3929 WASHINGTON ST
3929 WASHINGTON ST. KESINGTON, MD 20895

Owner
TOM AND MAGGIE McCULLOUGH

Developer

Issue Description	Date
PERMIT SET	09-29-2023
PERMIT SET PROGRESS SET	08-29-2023
D.D. ELECTRICAL & LIGHTING SET	08-10-2023
DESIGN DEV'T PROGRESS SET	07-24-2023

GTM Project No.	23.0187
Checked By	GTM/ RJV
Drawn By	RJV/ CCM
Scale	AS NOTED

Sheet Title
FIRST FLOOR PLAN

Sheet No.
A101

APPROVED
Montgomery County
Historic Preservation Commission

REVIEWED
By Dan.Bruechert at 3:51 pm, Dec 18, 2023

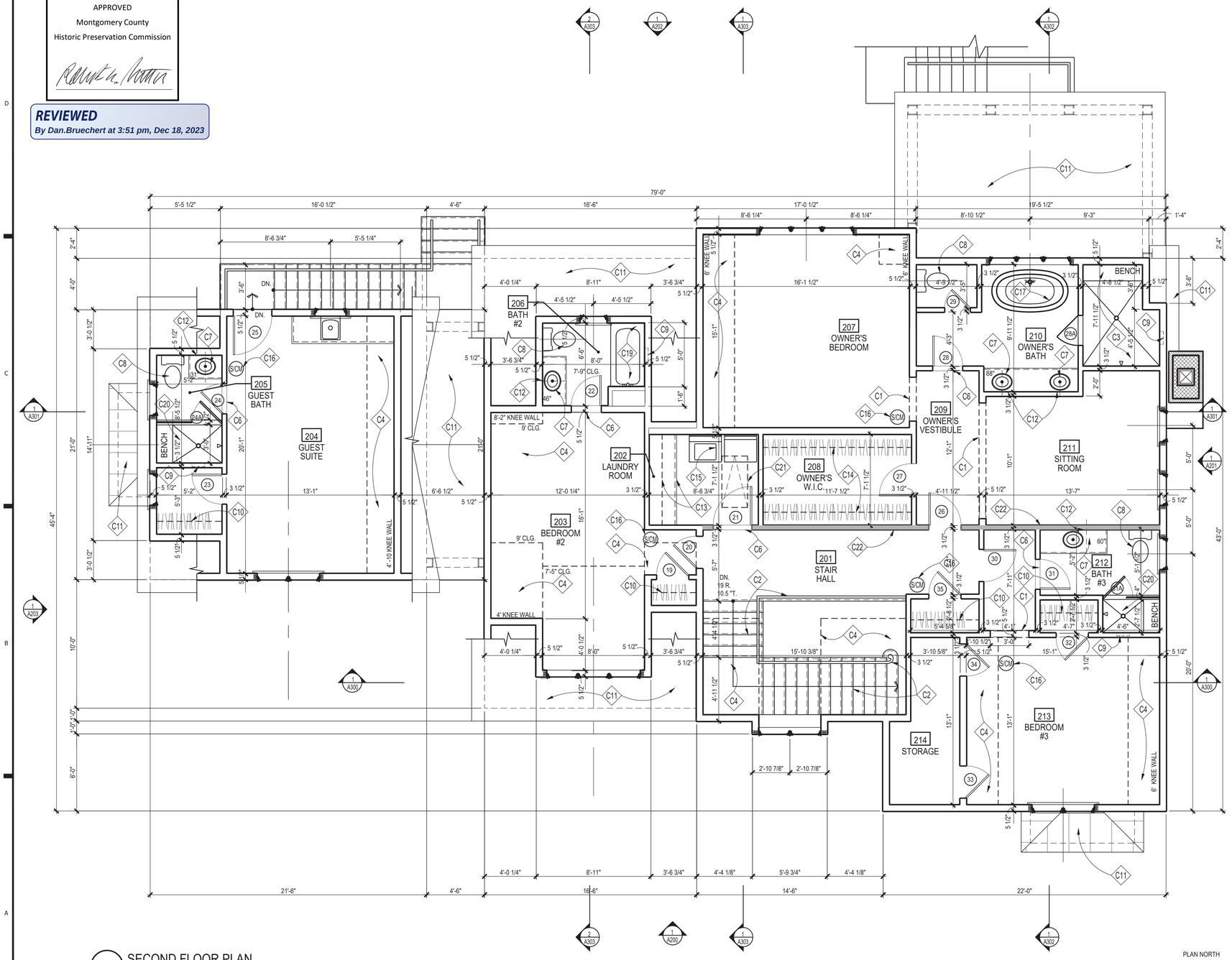

1 SECOND FLOOR PLAN
SCALE: 1/4"=1'=0

PLAN NORTH

CONSTRUCTION NOTES

- C1 CASED OPENING @ 7'-0" FINISHED (7'-2". ROUGH OPN'G. HGT.)
- C2 WD. STEPS: 1x RISERS W/ TREADS TO MATCH HARDWOOD FLOOR; RAILING T.B.S.; SEE DETAILS 1,2,3,7 A/ 306
- C3 CUSTOM PAN FORMED TILE SHOWER W/ SLOPED TILE SEAT PROVIDE MEMBRANE LINER & 1/2" DUROCK AROUND ALL SIDES. SEE 3 & 8 /A305
- C4 SLOPED CEILING
- C5 CUSTOM FRAMELESS GLASS ENCLOSURE
- C6 MARBLE THRESHOLD OR TRANSITION STRIP T.B.S.
- C7 VANITY W/ SINK FAUCET & COUNTERTOP; T.B.S.
- C8 PLUMBING FIXTURES, T.B.S.
- C9 12"Wx14" H TILED RECESS W/ SLOPED SILL @ 42" A.F.F.
- C10 PROVIDE HANGING ROD & 12" DEEP SHELF
- C11 ROOF BELOW, SEE ROOF PLAN
- C12 1/4" PLATE GLASS MIRROR T.B.S. BY OWNER AND INSTALLED BY CONTRACTOR.
- C13 LAUNDRY BASE & WALL CABINETS, APPLIANCES + COUNTER TOPS, ETC. TO BE SELECTED BY OWNER
- C14 CUSTOM CLOSET SYSTEM, T.B.S.
- C15 PROVIDE OVERFLOW FLOOR PAN & FLOOR DRAIN UNDER WASHING MACHINE
- C16 HARDWIRED SMOKE/ CARBON MONOXIDE DETECTOR COMBO PER I.R.C. ABOVE (CEILING MOUNTED)
- C17 FREE STANDING TUB, TO BE SELECTED
- C18 PROVIDE 5 EQUALLY SPACED MELAMINE SHELVES W/ EDGEBAND
- C19 ALCOVE BATH TUB W/ TILE SURROUND, EXTEND TILE TO CEILING AROUND ALL SIDES.
- C20 CURBED TILED SHOWER AND BENCH & TEMPERED GLASS ENCLOSURE. PROVIDE MEMBRANE LINER & 1/2" DUROCK AROUND ALL SIDES. SEE DETAIL 3 & 8/A305
- C21 ATTIC ACCESS LADDER; SEE SPECIFICATIONS
- C22 TONED WALL INDICATES 2x4 BEARING WALL

1. UNLESS INDICATED OTHERWISE, DIMENSIONS ARE TO FACE OF FRAMING
2. VERIFY ALL EXTERIOR RISER + TREAD DIMENSIONS IN THE FIELD
3. ENTIRE ADD'N TO HAVE NEW TRIM, BASE, ETC. TO MATCH EXT'G.
4. FILL CAVITY W./ MINERAL WOOL IN WALLS, CEILING, + FLOOR OF THE FOLLOWING ROOMS (U.N.O.):
   '205' GUEST BATH
   '210' OWNER'S BATH
   '202' LAUNDRY ROOM
   '206' BATH #2
   '212' BATH #3

WALL TYPES

TYPICAL EXTERIOR WALL; 2x6 WOOD
STUDS 16" O.C., W/ R-21 INSULATION & W/ VAPOR BARRIER, 1/2" OSB SHEATHING, TYVEK BUILDING WRAP, SIDING . SEE ELEVATIONS. INTERIOR FINISH TO BE GYP. BD. (1/2").

TYPICAL NON-BEARING INTERIOR PARTITION; 2"x4" STUDS 16" O.C. W/ 1/2" GYP. BD. EACH SIDE, INCREASE WALL THICKNESS AS SHOWN TO ALIGN FINISHES WHERE SHOWN.

GTM ARCHITECTS
7735 OLD GEORGETOWN ROAD
SUITE 700
BETHESDA, MD 20814
(240)333-2000
(240)333-2001 FAX
WWW.GTMARCHITECTS.COM

Seal

I certify that these documents were prepared or approved by me, and that I am a duly licensed architect under the laws of the State of Maryland, license number 6305. Expiration Date: 12-06-2024.

Consultant

Project
3929 WASHINGTON ST
3929 WASHINGTON ST. KESINGTON, MD 20895

Owner
TOM AND MAGGIE McCULLOUGH

Developer

Issue Description	Date
PERMIT SET	09-29-2023
PERMIT SET PROGRESS SET	08-29-2023
D.D. ELECTRICAL & LIGHTING SET	08-10-2023
DESIGN DEV'T PROGRESS SET	07-24-2023

GTM Project No.	23.0187
Checked By	GTM/ RJV
Drawn By	RJV/ CCM
Scale	AS NOTED

Sheet Title
SECOND FLOOR PLAN

Sheet No.
A102

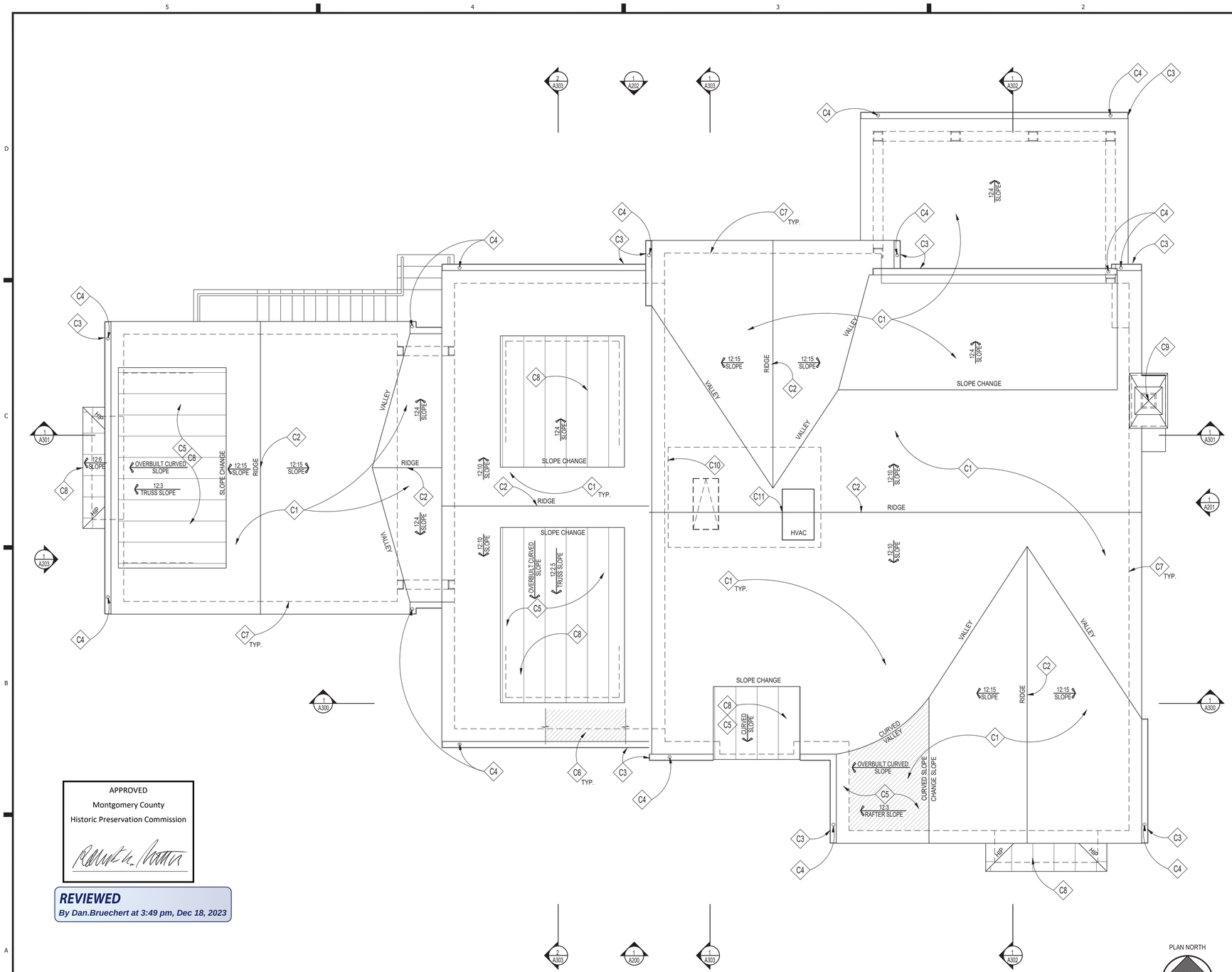

APPROVED
Montgomery County
Historic Preservation Commission

REVIEWED
By Dan.Bruechert at 3:49 pm, Dec 18, 2023

1 ROOF PLAN
SCALE: 1/4"=1'-0

CONSTRUCTION NOTES

- C1 SLATE SHINGLES, DARK GRAY / BLACK OR APPROVED EQUAL. OPTION OF "ECOSTAR" MAJESTIC SYNTHETIC SLATE TILE ROOFING. OWNER TO APPROVE.
- C2 RIDGE/HIP VENTS BY "COR-A-VENT" OR APPROVED EQUAL; START 12" FROM ROOF EDGE, TYP. REMOVE IF USING FOAM INSULATION.
- C3 OVERSIZED 6" SEAMLESS ROUND COPPER GUTTER, W./ GUTTER GUARD.
- C4 OVERSIZED SEAMLESS COPPER 4" ROUND DOWNSPOUT.
- C5 SEE ELEVATIONS/ SECTIONS DETAILS FOR ROOF RADIUS
- C6 ICE AND WATERGUARD AT ALL EAVES AND VALLEYS. SEE GENERAL ROOFING NOTE #1 BELOW.
- C7 LINE OF FRAME WALL BELOW
- C8 COPPER STANDING SEAM METAL ROOF, 1" HIGH STANDING SEAM LOC PANEL OR APPROVED EQUAL
- C9 BRICKED CHIMNEY W./ COPPER CAP, REFER TO DETAIL 17,20/A305; SEE ELEVATIONS
- C10 DASHED LINE SHOWN MECHANICAL ROOM AREA BELOW
- C11 HVAC UNIT BELOW ON ATTIC INSULATED MECHANICAL ROOM

GENERAL ROOFING NOTES

1. PROVIDE SELF-ADHERING, 40 MIL ICE AND WATER GUARD UNDERLAYMENT UNDER SHINGLES AT ALL VALLEYS AND FROM LOWEST EDGE OF ROOF SURFACES TO A POINT AT LEAST 24" INSIDE THE EXTERIOR WALL LINE, AND ON ALL AREAS WITH A SLOPE LESS THAN 4:12.
2. SEE FRAMING PLANS FOR OVERBUILD AREAS.
3. INSTALL CHIMNEY ANCHORAGE STRAPS AS PER IRC, 2018 EDITION TABLE R1003.14 AND FIGURE R1003.15
4. PAINT BLACK ALL PLUMBING VENT & PIPES
5. INSTALL AND FLASH SKYLIGHTS PER MANUFAC.

GTM ARCHITECTS
7735 OLD GEORGETOWN ROAD
SUITE 700
BETHESDA, MD 20814
(240)333-2000
(240)333-2001 FAX
WWW.GTMARCHITECTS.COM

Seal

I certify that these documents were prepared or approved by me, and that I am a duly licensed architect under the laws of the State of Maryland, license number 9395. Expiration Date: 12-06-2024

Consultant

Project
3929 WASHINGTON ST
3929 WASHINGTON ST. KESINGTON, MD 20895

Owner
TOM AND MAGGIE McCULLOUGH

Developer

Issue Description	Date
PERMIT SET	09-29-2023
PERMIT SET PROGRESS SET	08-29-2023
D.D. ELECTRICAL & LIGHTING SET	08-10-2023
DESIGN DEV'T PROGRESS SET	07-24-2023

GTM Project No.	23.0187
Checked By	GTM/ RJV
Drawn By	RJV/ CCM
Scale	AS NOTED

Sheet Title
ROOF PLAN

Sheet No.
A103

NOTE: PROVIDE RIDGE VENTS BY COR-A-VENT OR APPROVED EQUAL PER MANUFACTURER RECOMMENDATIONS, REMOVE IF USING FOAM

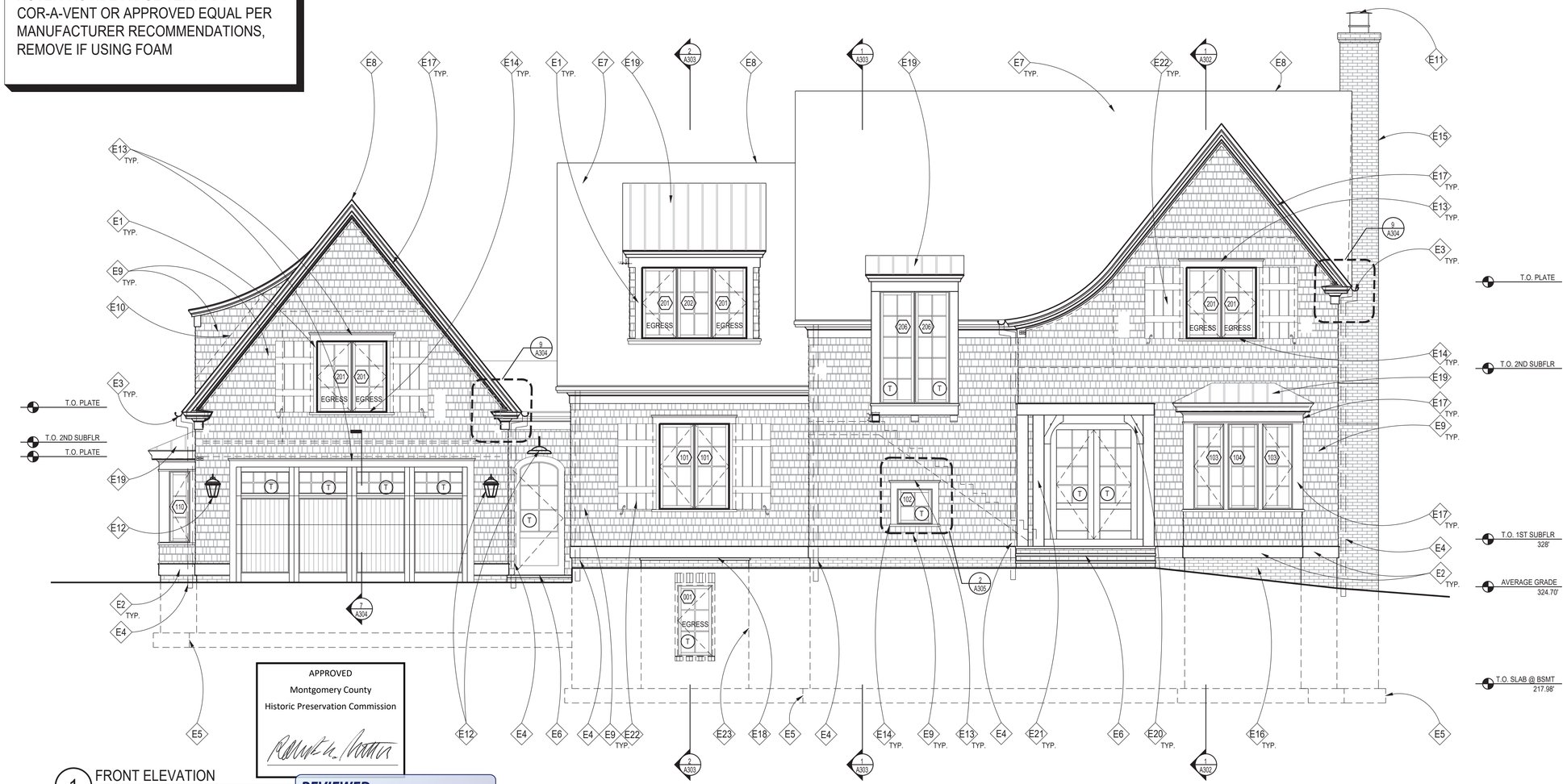

APPROVED
Montgomery County
Historic Preservation Commission

REVIEWED
By Dan.Bruechert at 3:55 pm, Dec 18, 2023

1 FRONT ELEVATION
SCALE: 1/4"=1'-0"

ELEVATION NOTES

NOTE:

1. VERIFY ALL EXTERIOR RISER & TREAD DIMENSIONS IN FIELD

- E1 PTD. AZEK 5/4x6 WINDOW/DOOR TRIM, TYP.; SEE GENERAL AZEK TRIM NOTES, THIS SHEET
- E2 PTD. AZEK TRIM BAND; SEE DETAILS
- E3 OVERSIZED 6" SEAMLESS ROUND COPPER GUTTER, W./ GUTTER GUARD
- E4 OVERSIZED SEAMLESS COPPER 4" ROUND DOWNSPOUT
- E5 LINE OF FOOTING BELOW, TYP.
- E6 2" FLAGSTONE PORCH/STOOP W/ STEPS TO GRADE; BRICK RISERS & FLAGSTONE TREADS, FIELD VERIFY RISE & RUN.
- E7 SLATE SHINGLES, DARK GRAY / BLACK OR APPROVED EQUAL. OPTION OF "ECOSTAR" MAJESTIC SYNTHETIC SLATE TILE ROOFING. OWNER TO APPROVE.
- E8 RIDGE/HIP VENTS BY "COR-A-VENT" OR APPROVED EQUAL; START 12" FROM ROOF EDGE, TYP. REMOVE IF USING FOAM INSULATION.
- E9 5" EXPOSURE CEDAR SHAKE WITH BREATHER COLOR T.B.S. SEE ELEVATIONS
- E10 CONCEALED ALUMINUM FLASHING @ ALL VERTICAL TRANSITIONS; EXTEND 8" MIN. BEHIND CEDAR SHAKE
- E11 CHIMNEY WALL TERMINATION CAP T.B.S.
- E12 EXTERIOR WALL SCONCE, T.B.S. BY OWNER
- E13 PTD. AZEK WINDOW HEADER. SEE DETAIL 2B/A305
- E14 PTD. AZEK WINDOW SILL. SEE DETAIL 2D/A305
- E15 FIREPLACE/ FLU CHIMNEY CAP, SEE DETAIL 17/A305
- E16 BRICK VENEER FOUNDATION WALL, TYP.
- E17 PTD. AZEK TRIM; SEE DETAILS & GENERAL AZEK TRIM NOTES (SHEET A200)
- E18 SLOPED 2" THICK FLAGSTONE CAP
- E19 COPPER STANDING SEAM METAL ROOF, 1" HIGH STANDING SEAM LOC PANEL OR APPROVED EQUAL
- E20 STAINED CEDAR, CUSTOM DECORATIVE BRACKETS T.B.S.
- E21 BUILT-UP 10" SQUARE STAINED CEDAR COLUMN, STRUCTURAL POST WITH-IN
- E22 STAINED CEDAR OPERABLE SHUTTERS & S-STYLE HOLDBACKS T.B.S., TYP.; INSTALL PER MANUFACTURER
- E23 EGRESS WINDOW WELL PER IRC; SEE DETAIL 11/A305

GENERAL AZEK TRIM NOTES

GLUE ALL AZEK TO AZEK JOINTS SUCH AS WINDOW SURROUNDS, LONG FASCIA RUNS, ETC., WITH AZEK ADHESIVE TO PREVENT JOINT SEPARATION.

THE GLUE JOINT SHOULD BE SECURED WITH A FASTENER AND/OR FASTENED ON EACH SIDE OF THE JOINT TO ALLOW ADEQUATE BONDING TIME.

AZEK ADHESIVE HAS A WORKING TIME OF 10 MINUTES AND WILL BE FULLY CURED IN 24 HOURS.

IF STANDARD PVC CEMENTS ARE USED, KEEP IN MIND THESE PRODUCTS TYPICALLY CURE QUICKLY WHICH WILL RESULT IN LIMITED WORKING TIME AND MAY REDUCE ADHESIVE STRENGTH. AS SUCH THEY ARE NOT ACCEPTABLE.

FOR BEST RESULTS, SURFACES TO BE GLUED SHOULD BE SMOOTH, CLEAN AND IN COMPLETE CONTACT WITH EACH OTHER.

TO BOND AZEK TO OTHER SUBSTRATES, VARIOUS ADHESIVES MAY BE USED. CONSULT ADHESIVE MANUFACTURER TO DETERMINE SUITABILITY.

AZEK PRODUCTS EXPAND AND CONTRACT WITH CHANGES IN TEMPERATURE.

PROPERLY FASTENING AZEK MATERIAL ALONG ITS ENTIRE LENGTH WILL MINIMIZE EXPANSION AND CONTRACTION.

WHEN PROPERLY FASTENED, ALLOW 1/8" PER 18 FOOT OF AZEK PRODUCT FOR EXPANSION AND CONTRACTION. JOINTS BETWEEN PIECES OF AZEK SHOULD BE GLUED TO ELIMINATE JOINT SEPARATION. SEE "GLUING" DIAGRAM BELOW.

WHEN GAPS ARE GLUED ON A LONG RUN OF AZEK, ALLOW EXPANSION AND CONTRACTION SPACE AT ENDS OF THE RUN.

INSTALL PER AZEK.

FOR ADDITIONAL INFORMATION: VISIT WWW.AZEK.COM OR CALL 877-ASK-AZEK.

GTM ARCHITECTS

7735 OLD GEORGETOWN ROAD
SUITE 700
BETHESDA, MD 20814
(240)333-2000
(240)333-2001 FAX
WWW.GTMARCHITECTS.COM

Seal

I certify that these documents were prepared or approved by me, and that I am a duly licensed architect under the laws of the State of Maryland. License number 16846, Expiration Date: 12-06-2024.

Consultant

Project
3929 WASHINGTON ST
3929 WASHINGTON ST. KESINGTON, MD 20895

Owner
TOM AND MAGGIE McCULLOUGH

Developer

Issue Description	Date
PERMIT SET	09-29-2023
PERMIT SET PROGRESS SET	08-29-2023
D.D. ELECTRICAL & LIGHTING SET	08-10-2023
DESIGN DEV'T PROGRESS SET	07-24-2023

GTM Project No.	23.0187
Checked By	GTM/ RJV
Drawn By	RJV/ CCM
Scale	AS NOTED

Sheet Title
FRONT ELEVATION

Sheet No.
A200

FILE NAME:

NOTE: PROVIDE RIDGE VENTS BY COR-A-VENT OR APPROVED EQUAL PER MANUFACTURER RECOMMENDATIONS, REMOVE IF USING FOAM

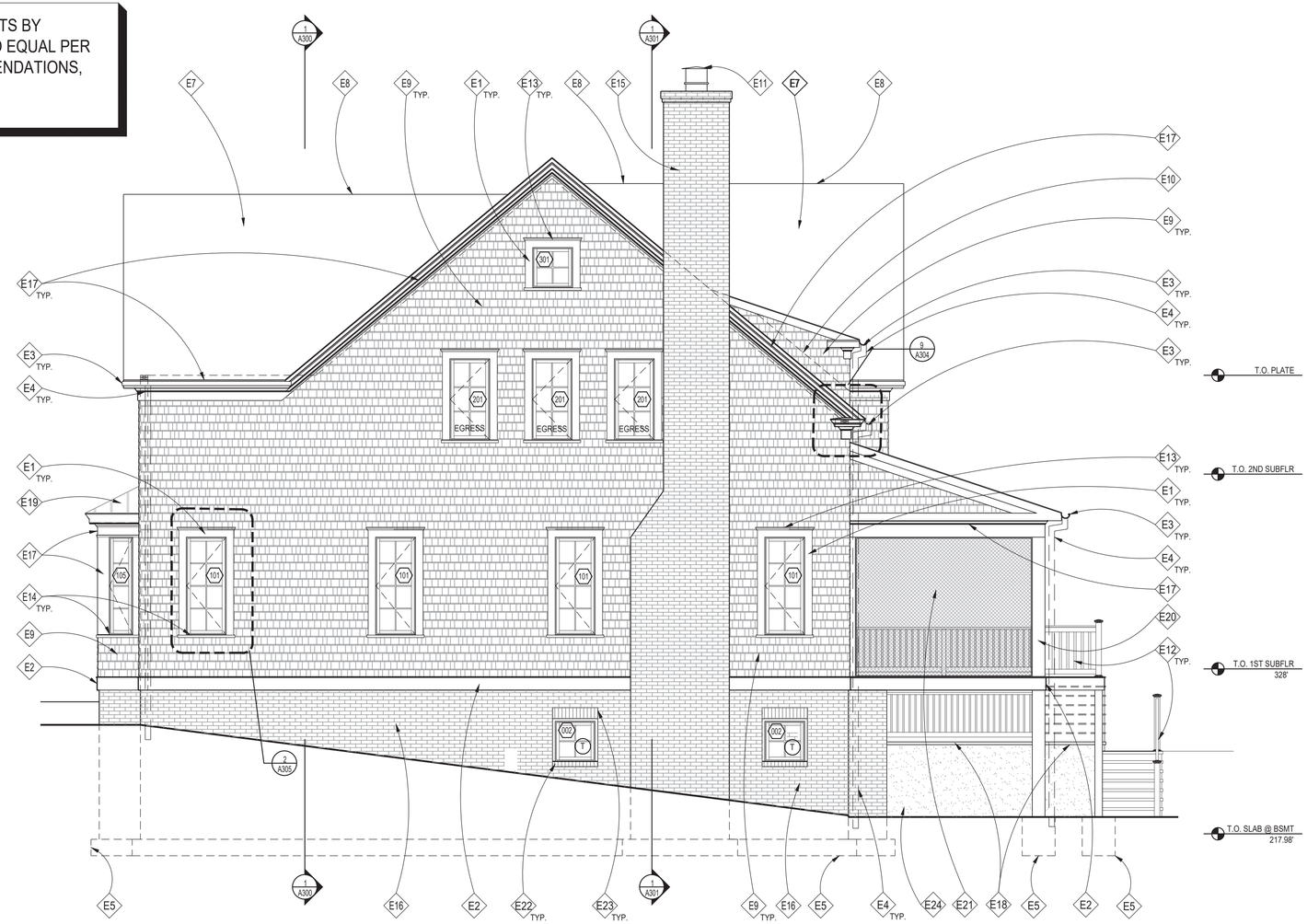

1 RIGHT SIDE ELEVATION

SCALE: 1/4"=1'-0"

APPROVED
Montgomery County
Historic Preservation Commission

REVIEWED
By Dan.Bruechert at 3:56 pm, Dec 18, 2023

ELEVATION NOTES

NOTE:

1. VERIFY ALL EXTERIOR RISER & TREAD DIMENSIONS IN FIELD

- E1 PTD. AZEK 5/4x6 WINDOW/DOOR TRIM, TYP.; SEE GENERAL AZEK TRIM NOTES, THIS SHEET
- E2 PTD. AZEK TRIM BAND; SEE DETAILS
- E3 OVERSIZED 6" SEAMLESS ROUND COPPER GUTTER, W./ GUTTER GUARD
- E4 OVERSIZED SEAMLESS COPPER 4" ROUND DOWNSPOUT
- E5 LINE OF FOOTING BELOW, SEE FOUNDATION PLAN
- E6 2" FLAGSTONE PORCH/STOOP W/ STEPS TO GRADE; BRICK RISERS & FLAGSTONE TREADS, FIELD VERIFY RISE & RUN.
- E7 SLATE SHINGLES, DARK GRAY / BLACK OR APPROVED EQUAL. OPTION OF "ECOSTAR" MAJESTIC SYNTHETIC SLATE TILE ROOFING. OWNER TO APPROVE.
- E8 RIDGE/HIP VENTS BY "COR-A-VENT" OR APPROVED EQUAL; START 12" FROM ROOF EDGE, TYP. REMOVE IF USING FOAM INSULATION.
- E9 5" EXPOSURE CEDAR SHAKE WITH BREATHER COLOR T.B.S. SEE ELEVATIONS
- E10 CONCEALED ALUMINUM FLASHING @ ALL VERTICAL TRANSITIONS; EXTEND 8" MIN. BEHIND CEDAR SHAKE
- E11 CHIMNEY WALL TERMINATION CAP T.B.S.
- E12 EXTERIOR COMPOSITE RAILING SYSTEM. FOLLOW IRC 2018 R312
- E13 PTD. AZEK WINDOW HEADER. SEE DETAIL 2B/A305
- E14 PTD. AZEK WINDOW SILL. SEE DETAIL 2D/A305
- E15 FIREPLACE/ FLU CHIMNEY CAP, SEE DETAIL 17/ A305
- E16 BRICK VENEER FOUNDATION WALL, TYP.
- E17 PTD. AZEK TRIM; SEE DETAILS & GENERAL AZEK TRIM NOTES (SHEET A200)
- E18 SLOPED 2" THICK FLAGSTONE CAP
- E19 COPPER STANDING SEAM METAL ROOF, 1" HIGH STANDING SEAM LOC PANEL OR APPROVED EQUAL
- E20 10" SQUARE PTD. AZEK COLUMN
- E21 SCREENING PANEL SYSTEM , T.B.S.
- E22 SLOPED ROWLOCK BRICK SILL, TYP.
- E23 8" SOLDIER COURSE HEADER, TYP.
- E24 PARGING ON BACK SIDE OF RETAINING WALL

GENERAL AZEK TRIM NOTES

GLUE ALL AZEK TO AZEK JOINTS SUCH AS WINDOW SURROUNDS, LONG FASCIA RUNS, ETC., WITH AZEK ADHESIVE TO PREVENT JOINT SEPARATION.

THE GLUE JOINT SHOULD BE SECURED WITH A FASTENER AND/OR FASTENED ON EACH SIDE OF THE JOINT TO ALLOW ADEQUATE BONDING TIME.

AZEK ADHESIVE HAS A WORKING TIME OF 10 MINUTES AND WILL BE FULLY CURED IN 24 HOURS.

IF STANDARD PVC CEMENTS ARE USED, KEEP IN MIND THESE PRODUCTS TYPICALLY CURE QUICKLY WHICH WILL RESULT IN LIMITED WORKING TIME AND MAY REDUCE ADHESIVE STRENGTH. AS SUCH THEY ARE NOT ACCEPTABLE.

FOR BEST RESULTS, SURFACES TO BE GLUED SHOULD BE SMOOTH, CLEAN AND IN COMPLETE CONTACT WITH EACH OTHER.

TO BOND AZEK TO OTHER SUBSTRATES, VARIOUS ADHESIVES MAY BE USED. CONSULT ADHESIVE MANUFACTURER TO DETERMINE SUITABILITY.

AZEK PRODUCTS EXPAND AND CONTRACT WITH CHANGES IN TEMPERATURE.

PROPERLY FASTENING AZEK MATERIAL ALONG ITS ENTIRE LENGTH WILL MINIMIZE EXPANSION AND CONTRACTION.

WHEN PROPERLY FASTENED, ALLOW 1/8" PER 18 FOOT OF AZEK PRODUCT FOR EXPANSION AND CONTRACTION. JOINTS BETWEEN PIECES OF AZEK SHOULD BE GLUED TO ELIMINATE JOINT SEPARATION. SEE "GLUING" DIAGRAM BELOW.

WHEN GAPS ARE GLUED ON A LONG RUN OF AZEK, ALLOW EXPANSION AND CONTRACTION SPACE AT ENDS OF THE RUN.

INSTALL PER AZEK.

FOR ADDITIONAL INFORMATION: VISIT WWW.AZEK.COM OR CALL 877-ASK-AZEK.

GTM ARCHITECTS

7735 OLD GEORGETOWN ROAD
SUITE 700
BETHESDA, MD 20814
(240)333-2000
(240)333-2001 FAX
WWW.GTMARCHITECTS.COM

Seal

I certify that these documents were prepared or approved by me, and that I am a duly licensed architect under the laws of the State of Maryland. License number 30365, Expiration Date: 12-06-2024.

Consultant

Project

3929 WASHINGTON ST

3929 WASHINGTON ST. KESINGTON, MD 20895

Owner

TOM AND MAGGIE McCULLOUGH

Developer

Issue Description	Date
PERMIT SET	09-29-2023
PERMIT SET PROGRESS SET	08-29-2023
D.D. ELECTRICAL & LIGHTING SET	08-10-2023
DESIGN DEV'T PROGRESS SET	07-24-2023

GTM Project No.	23.0187
Checked By	GTM/ RJV
Drawn By	RJV/ CCM
Scale	AS NOTED

Sheet Title

RIGHT SIDE ELEVATION

Sheet No.

A201

FILE NAME:

NOTE: PROVIDE RIDGE VENTS BY COR-A-VENT OR APPROVED EQUAL PER MANUFACTURER RECOMMENDATIONS, REMOVE IF USING FOAM

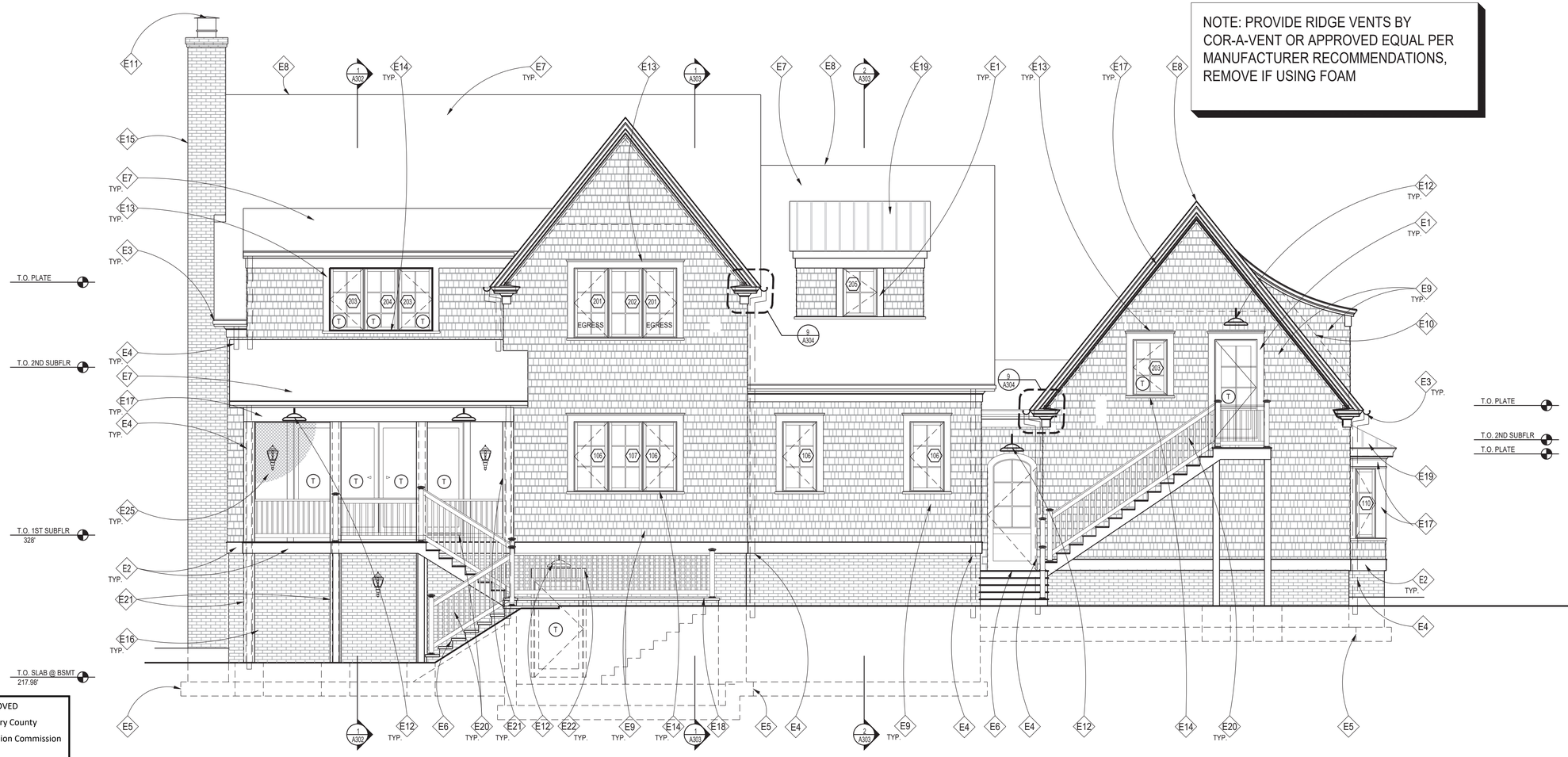

1 REAR ELEVATION
SCALE: 1/4"=1'-0"

APPROVED
Montgomery County
Historic Preservation Commission

REVIEWED
By Dan.Bruechert at 3:56 pm, Dec 18, 2023

ELEVATION NOTES

NOTE:

1. VERIFY ALL EXTERIOR RISER & TREAD DIMENSIONS IN FIELD

- E1 PTD. AZEK 5/4x6 WINDOW/DOOR TRIM, TYP.; SEE GENERAL AZEK TRIM NOTES, THIS SHEET
- E2 PTD. AZEK TRIM BAND; SEE DETAILS
- E3 OVERSIZED 6" SEAMLESS ROUND COPPER GUTTER, W./ GUTTER GUARD
- E4 OVERSIZED SEAMLESS COPPER 4" ROUND DOWNSPOUT
- E5 LINE OF FOOTING BELOW, TYP.
- E6 2" FLAGSTONE PORCH/STOOP W/ STEPS TO GRADE; BRICK RISERS & FLAGSTONE TREADS, FIELD VERIFY RISE & RUN.
- E7 SLATE SHINGLES, DARK GRAY / BLACK OR APPROVED EQUAL. OPTION OF "ECOSTAR" MAJESTIC SYNTHETIC SLATE TILE ROOFING. OWNER TO APPROVE.
- E8 RIDGE/HIP VENTS BY "COR-A-VENT" OR APPROVED EQUAL; START 12" FROM ROOF EDGE, TYP. REMOVE IF USING FOAM INSULATION.
- E9 5" EXPOSURE CEDAR SHAKE WITH BREATHER COLOR T.B.S. SEE ELEVATIONS
- E10 CONCEALED ALUMINUM FLASHING @ ALL VERTICAL TRANSITIONS; EXTEND 8" MIN. BEHIND CEDAR SHAKE
- E11 CHIMNEY WALL TERMINATION CAP T.B.S.
- E12 EXTERIOR WALL SCONCE, T.B.S. BY OWNER
- E13 PTD. AZEK WINDOW HEADER. SEE DETAIL 2B/A305
- E14 PTD. AZEK WINDOW SILL. SEE DETAIL 2D/A305
- E15 FIREPLACE/ FLU CHIMNEY CAP, SEE DETAIL 17/ A305
- E16 BRICK VENEER FOUNDATION WALL, TYP.
- E17 PTD. AZEK TRIM; SEE DETAILS & GENERAL AZEK TRIM NOTES (SHEET A200)
- E18 SLOPED 2" THICK FLAGSTONE CAP
- E19 COPPER STANDING SEAM METAL ROOF, 1" HIGH STANDING SEAM LOC PANEL OR APPROVED EQUAL
- E20 EXTERIOR COMPOSITE RAILING SYSTEM. FOLLOW IRC 2018 R312
- E21 10" SQUARE BUILT-UP STAINED COLUMN
- E22 8" SOLDIER COURSE HEADER, TYP.
- E23 SLOPED ROWLOCK BRICK SILL, TYP.
- E24 EGRESS WINDOW WELL PER IRC; SEE DETAIL 11/A305
- E25 SCREENING PANEL SYSTEM , T.B.S.

GENERAL AZEK TRIM NOTES

GLUE ALL AZEK TO AZEK JOINTS SUCH AS WINDOW SURROUNDS, LONG FASCIA RUNS, ETC., WITH AZEK ADHESIVE TO PREVENT JOINT SEPARATION.

THE GLUE JOINT SHOULD BE SECURED WITH A FASTENER AND/OR FASTENED ON EACH SIDE OF THE JOINT TO ALLOW ADEQUATE BONDING TIME.

AZEK ADHESIVE HAS A WORKING TIME OF 10 MINUTES AND WILL BE FULLY CURED IN 24 HOURS.

IF STANDARD PVC CEMENTS ARE USED, KEEP IN MIND THESE PRODUCTS TYPICALLY CURE QUICKLY WHICH WILL RESULT IN LIMITED WORKING TIME AND MAY REDUCE ADHESIVE STRENGTH. AS SUCH THEY ARE NOT ACCEPTABLE.

FOR BEST RESULTS, SURFACES TO BE GLUED SHOULD BE SMOOTH, CLEAN AND IN COMPLETE CONTACT WITH EACH OTHER.

TO BOND AZEK TO OTHER SUBSTRATES, VARIOUS ADHESIVES MAY BE USED. CONSULT ADHESIVE MANUFACTURER TO DETERMINE SUITABILITY.

AZEK PRODUCTS EXPAND AND CONTRACT WITH CHANGES IN TEMPERATURE.

PROPERLY FASTENING AZEK MATERIAL ALONG ITS ENTIRE LENGTH WILL MINIMIZE EXPANSION AND CONTRACTION.

WHEN PROPERLY FASTENED, ALLOW 1/8" PER 18 FOOT OF AZEK PRODUCT FOR EXPANSION AND CONTRACTION. JOINTS BETWEEN PIECES OF AZEK SHOULD BE GLUED TO ELIMINATE JOINT SEPARATION. SEE "GLUING" DIAGRAM BELOW.

WHEN GAPS ARE GLUED ON A LONG RUN OF AZEK, ALLOW EXPANSION AND CONTRACTION SPACE AT ENDS OF THE RUN.

INSTALL PER AZEK.

FOR ADDITIONAL INFORMATION: VISIT WWW.AZEK.COM OR CALL 877-ASK-AZEK.

GTM ARCHITECTS

7735 OLD GEORGETOWN ROAD
SUITE 700
BETHESDA, MD 20814
(240)333-2000
(240)333-2001 FAX
WWW.GTMARCHITECTS.COM

Seal

STATE OF MARYLAND
RICHARD JOHN VAN METER
No. 29911
ARCHITECT

I certify that these documents were prepared or approved by me, and that I am a duly licensed architect under the laws of the State of Maryland. License number 29911, Expiration Date: 12-06-2024.

Consultant

Project
3929 WASHINGTON ST
3929 WASHINGTON ST. KESINGTON, MD 20895

Owner
TOM AND MAGGIE McCULLOUGH

Developer

Issue Description	Date
PERMIT SET	09-29-2023
PERMIT SET PROGRESS SET	08-29-2023
D.D. ELECTRICAL & LIGHTING SET	08-10-2023
DESIGN DEV'T PROGRESS SET	07-24-2023

GTM Project No.	23.0187
Checked By	GTM/ RJV
Drawn By	RJV/ CCM
Scale	AS NOTED

Sheet Title
REAR ELEVATION

Sheet No.
A202

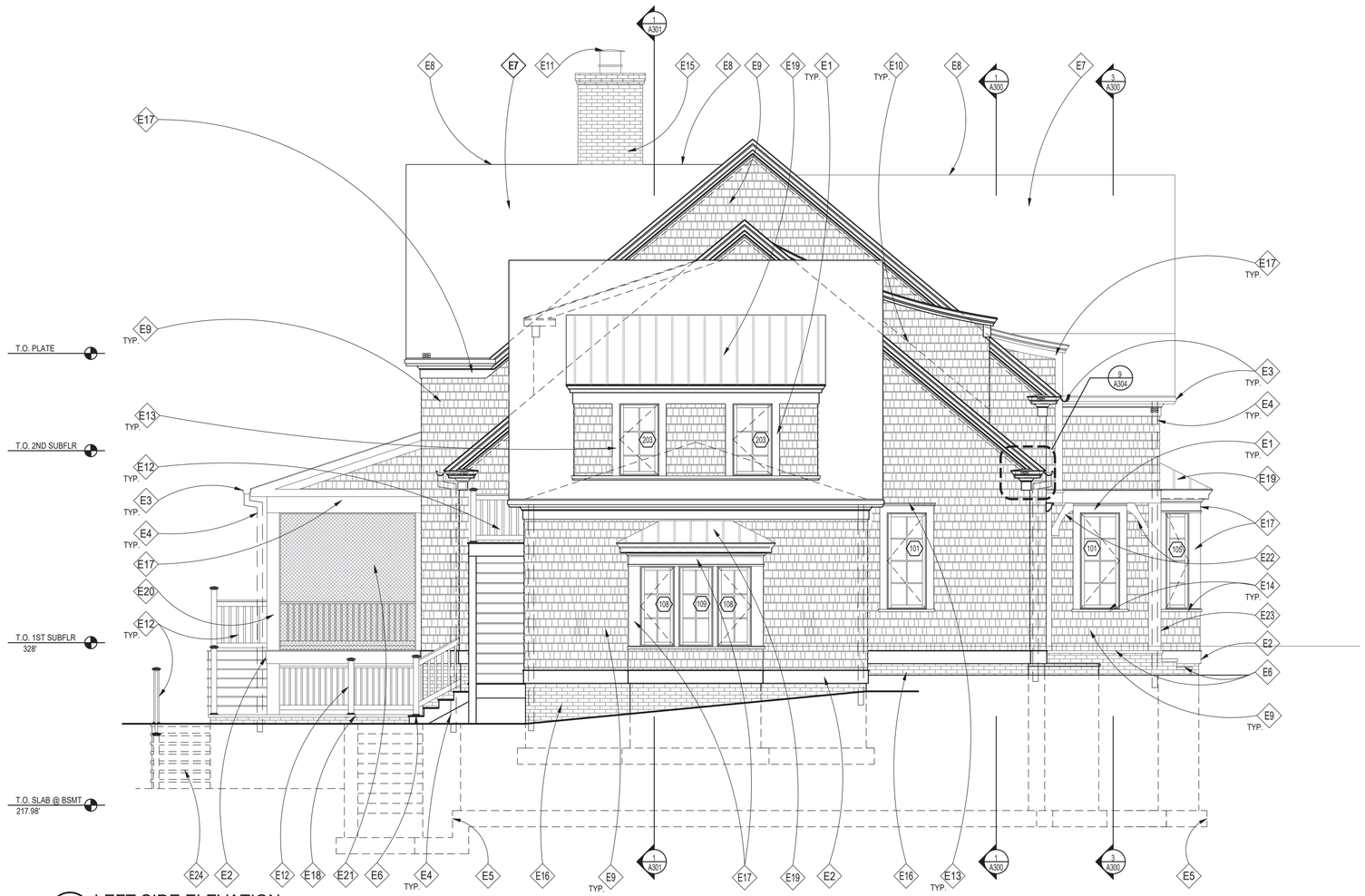

1 LEFT SIDE ELEVATION

SCALE: 1/4"=1'-0"

NOTE: PROVIDE RIDGE VENTS BY COR-A-VENT OR APPROVED EQUAL PER MANUFACTURER RECOMMENDATIONS, REMOVE IF USING FOAM

APPROVED
Montgomery County
Historic Preservation Commission

REVIEWED
By Dan.Bruechert at 3:55 pm, Dec 18, 2023

ELEVATION NOTES

NOTE:

1. VERIFY ALL EXTERIOR RISER & TREAD DIMENSIONS IN FIELD

- E1 PTD. AZEK 5/4x6 WINDOW/DOOR TRIM, TYP.; SEE GENERAL AZEK TRIM NOTES, THIS SHEET
- E2 PTD. AZEK TRIM BAND; SEE DETAILS
- E3 OVERSIZED 6" SEAMLESS ROUND COPPER GUTTER, W./ GUTTER GUARD
- E4 OVERSIZED SEAMLESS COPPER 4" ROUND DOWNSPOUT
- E5 LINE OF FOOTING BELOW, TYP.
- E6 2" FLAGSTONE PORCH/STOOP W/ STEPS TO GRADE; BRICK RISERS & FLAGSTONE TREADS, FIELD VERIFY RISE & RUN.
- E7 SLATE SHINGLES, DARK GRAY / BLACK OR APPROVED EQUAL. OPTION OF "ECOSTAR" MAJESTIC SYNTHETIC SLATE TILE ROOFING. OWNER TO APPROVE.
- E8 RIDGE/HIP VENTS BY "COR-A-VENT" OR APPROVED EQUAL; START 12" FROM ROOF EDGE, TYP. REMOVE IF USING FOAM INSULATION.
- E9 5" EXPOSURE CEDAR SHAKE WITH BREATHER COLOR T.B.S. SEE ELEVATIONS
- E10 CONCEALED ALUMINUM FLASHING @ ALL VERTICAL TRANSITIONS; EXTEND 8" MIN. BEHIND CEDAR SHAKE
- E11 CHIMNEY WALL TERMINATION CAP T.B.S.
- E12 EXTERIOR COMPOSITE RAILING SYSTEM. FOLLOW IRC 2018 R312
- E13 PTD. AZEK WINDOW HEADER. SEE DETAIL 2B/A305
- E14 PTD. AZEK WINDOW SILL. SEE DETAIL 2D/A305
- E15 FIREPLACE/ FLU CHIMNEY CAP, SEE DETAIL 17/ A305
- E16 BRICK VENEER FOUNDATION WALL, TYP.
- E17 PTD. AZEK TRIM; SEE DETAILS & GENERAL AZEK TRIM NOTES (SHEET A200)
- E18 SLOPED 2" THICK FLAGSTONE CAP
- E19 COPPER STANDING SEAM METAL ROOF, 1" HIGH STANDING SEAM LOC PANEL OR APPROVED EQUAL
- E20 10" SQUARE BUILT-UP STAINED COLUMN
- E21 SCREENING PANEL SYSTEM , T.B.S.
- E22 STAINED CEDAR, CUSTOM DECORATIVE BRACKETS T.B.S.
- E23 10" SQUARE STAINED CEDAR COLUMN
- E24 2" FLAGSTONE STEPS OVER CONCRETE, BEYOND

GENERAL AZEK TRIM NOTES

GLUE ALL AZEK TO AZEK JOINTS SUCH AS WINDOW SURROUNDS, LONG FASCIA RUNS, ETC., WITH AZEK ADHESIVE TO PREVENT JOINT SEPARATION.

THE GLUE JOINT SHOULD BE SECURED WITH A FASTENER AND/OR FASTENED ON EACH SIDE OF THE JOINT TO ALLOW ADEQUATE BONDING TIME.

AZEK ADHESIVE HAS A WORKING TIME OF 10 MINUTES AND WILL BE FULLY CURED IN 24 HOURS.

IF STANDARD PVC CEMENTS ARE USED, KEEP IN MIND THESE PRODUCTS TYPICALLY CURE QUICKLY WHICH WILL RESULT IN LIMITED WORKING TIME AND MAY REDUCE ADHESIVE STRENGTH. AS SUCH THEY ARE NOT ACCEPTABLE.

FOR BEST RESULTS, SURFACES TO BE GLUED SHOULD BE SMOOTH, CLEAN AND IN COMPLETE CONTACT WITH EACH OTHER.

TO BOND AZEK TO OTHER SUBSTRATES, VARIOUS ADHESIVES MAY BE USED. CONSULT ADHESIVE MANUFACTURER TO DETERMINE SUITABILITY.

AZEK PRODUCTS EXPAND AND CONTRACT WITH CHANGES IN TEMPERATURE.

PROPERLY FASTENING AZEK MATERIAL ALONG ITS ENTIRE LENGTH WILL MINIMIZE EXPANSION AND CONTRACTION.

WHEN PROPERLY FASTENED, ALLOW 1/8" PER 18 FOOT OF AZEK PRODUCT FOR EXPANSION AND CONTRACTION. JOINTS BETWEEN PIECES OF AZEK SHOULD BE GLUED TO ELIMINATE JOINT SEPARATION. SEE "GLUING" DIAGRAM BELOW.

WHEN GAPS ARE GLUED ON A LONG RUN OF AZEK, ALLOW EXPANSION AND CONTRACTION SPACE AT ENDS OF THE RUN.

INSTALL PER AZEK.

FOR ADDITIONAL INFORMATION: VISIT WWW.AZEK.COM OR CALL 877-ASK-AZEK.

GTM ARCHITECTS

7735 OLD GEORGETOWN ROAD
SUITE 700
BETHESDA, MD 20814
(240)333-2000
(240)333-2001 FAX
WWW.GTMARCHITECTS.COM

Seal

I certify that these documents were prepared or approved by me, and that I am a duly licensed architect under the laws of the State of Maryland. License number 16,800, Expiration Date: 12-06-2024.

Consultant

Project
3929 WASHINGTON ST
3929 WASHINGTON ST. KESINGTON, MD 20895

Owner
TOM AND MAGGIE McCULLOUGH

Developer

Issue Description	Date
PERMIT SET	09-29-2023
PERMIT SET PROGRESS SET	08-29-2023
D.D. ELECTRICAL & LIGHTING SET	08-10-2023
DESIGN DEV'T PROGRESS SET	07-24-2023

GTM Project No.	23.0187
Checked By	GTM/ RJV
Drawn By	RJV/ CCM
Scale	AS NOTED

Sheet Title
LEFT SIDE ELEVATION

Sheet No.
A203

APPROVED
Montgomery County
Historic Preservation Commission

REVIEWED
By Dan.Bruechert at 4:10 pm, Dec 18, 2023

SECTION NOTES

1. FLOOR JOISTS; SEE FRAMING PLANS
2. ROOF TRUSSES BY TRUSS MANUFACTURER; SEE FRAMING PLANS
3. 3/4" T&G PLYWD. SUBFLOOR; GLUED & SCREWED
4. BEAM; SEE FRAMING PLANS
5. CONCRETE FOUNDATION WALL; SEE FOUNDATION PLAN
6. FOOTING; SEE FOUNDATION PLAN
7. REINF. CONC. SLAB; SEE FOUNDATION PLAN
8. INSULATION, SEE ECC01
9. GIRDER TRUSS BY TRUSS MANUFACTURER; SEE FRAMING PLANS

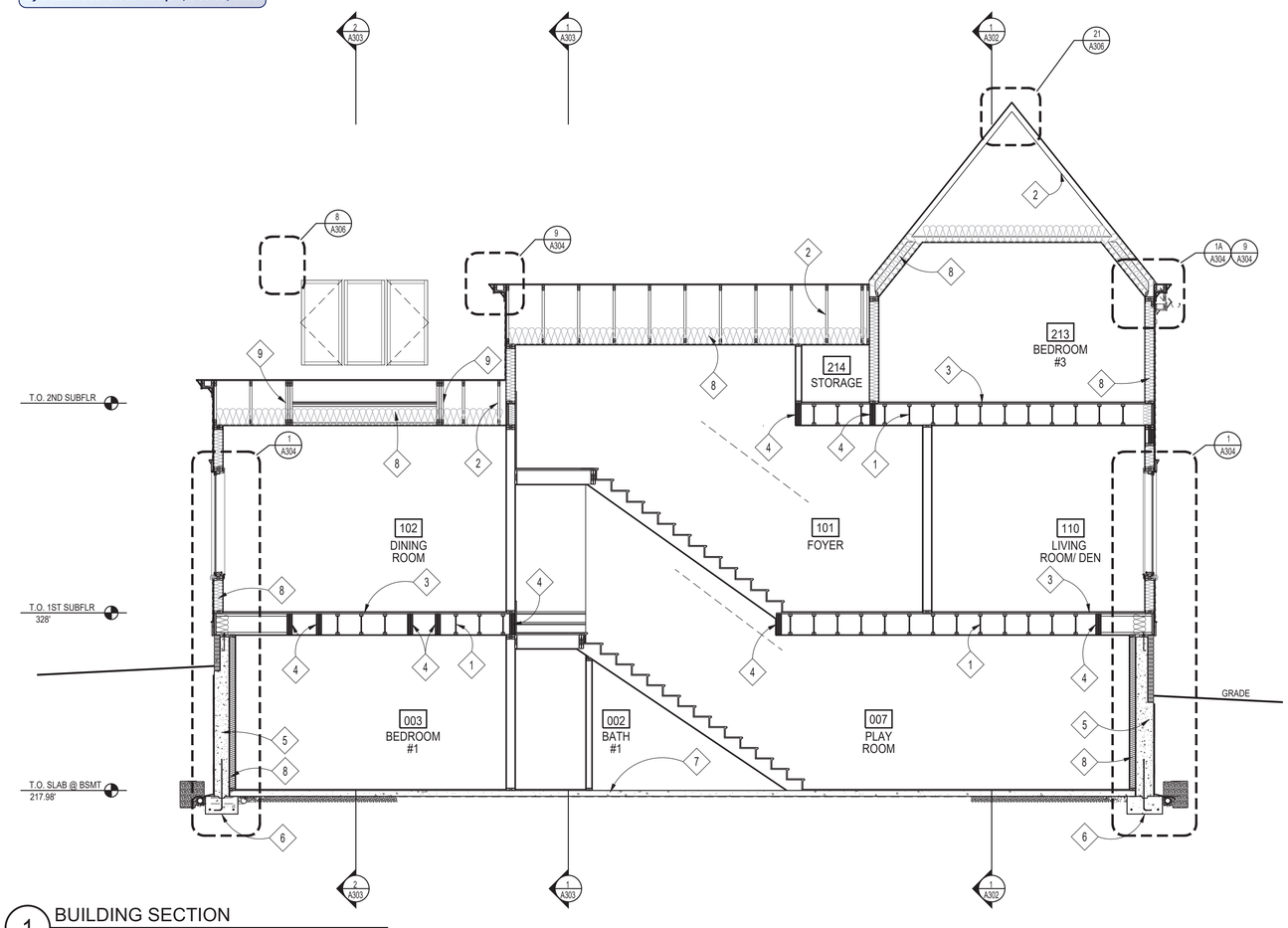

1 BUILDING SECTION
SCALE: 1/4"=1'-0"

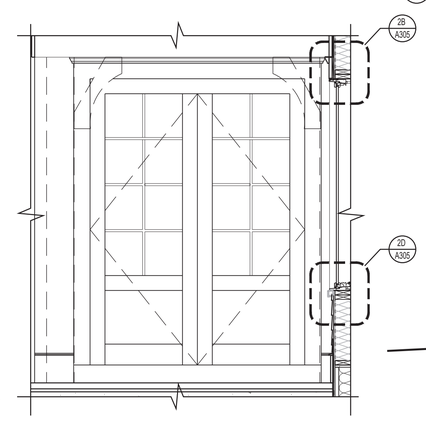

2 FRONT DOOR ELEVATION
SCALE: 1/2"=1'-0"

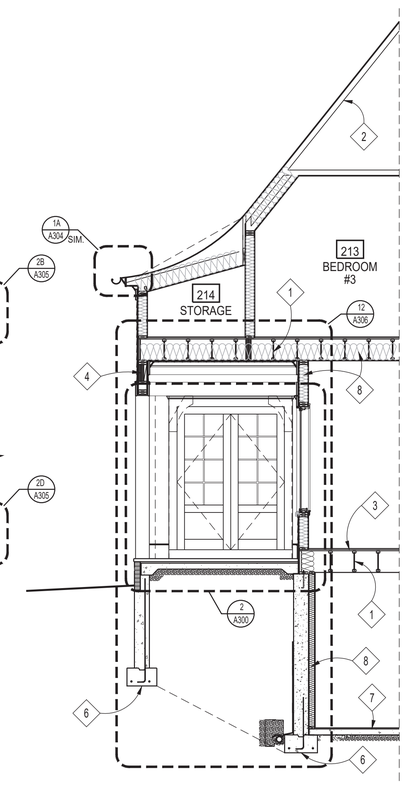

3 BUILDING SECTION
SCALE: 1/4"=1'-0"

NOTE:
1. VERIFY ALL EXTERIOR RISER & TREAD DIMENSIONS IN FIELD

GTM ARCHITECTS
7735 OLD GEORGETOWN ROAD
SUITE 700
BETHESDA, MD 20814
(240)333-2000
(240)333-2001 FAX
WWW.GTMARCHITECTS.COM

Seal

I certify that these documents were prepared or approved by me, and that I am a duly licensed architect under the laws of the State of Maryland, License number 3355, Expiration Date: 12-06-2024.

Consultant

Project
3929 WASHINGTON ST
3929 WASHINGTON ST. KESINGTON, MD 20895

Owner
TOM AND MAGGIE McCULLOUGH

Developer

Issue Description	Date
PERMIT SET	09-29-2023
PERMIT SET PROGRESS SET	08-29-2023
D.D. ELECTRICAL & LIGHTING SET	08-10-2023
DESIGN DEV'T PROGRESS SET	07-24-2023

GTM Project No.	23.0187
Checked By	GTM/ RJV
Drawn By	RJV/ CCM
Scale	AS NOTED

Sheet Title
BUILDING SECTIONS

Sheet No.
A300

APPROVED
Montgomery County
Historic Preservation Commission

REVIEWED
By Dan.Bruechert at 4:09 pm, Dec 18, 2023

REVIEWED
By Dan.Bruechert at 4:09 pm, Dec 18, 2023

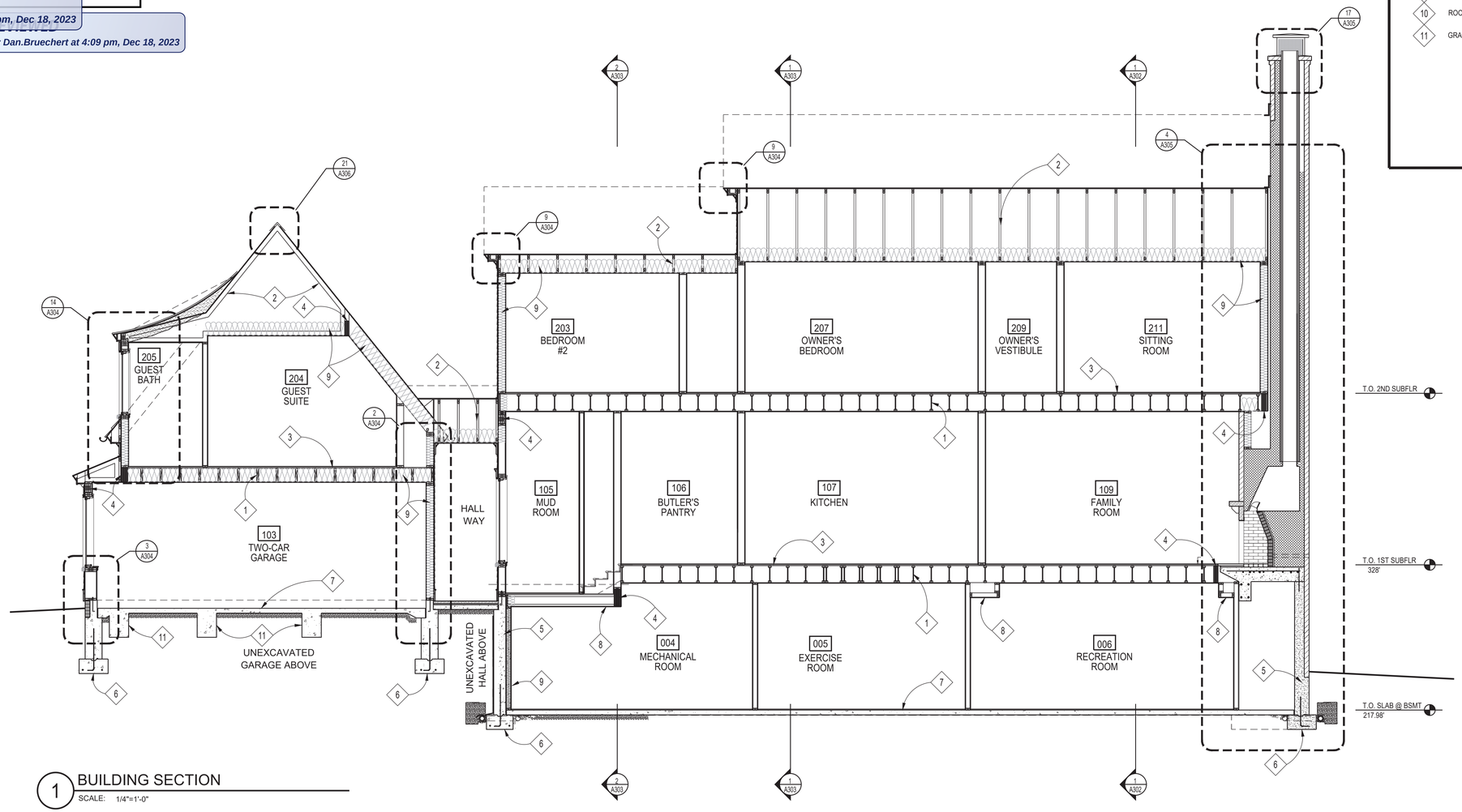

1 BUILDING SECTION
SCALE: 1/4"=1'-0"

SECTION NOTES

1. FLOOR JOISTS; SEE FRAMING PLANS
2. ROOF TRUSSES BY TRUSS MANUFACTURER; SEE FRAMING PLANS
3. 3/4" T&G PLYWD. SUBFLOOR; GLUED & SCREWED
4. BEAM; SEE FRAMING PLANS
5. CONCRETE FOUNDATION WALL; SEE FOUNDATION PLAN
6. FOOTING; SEE FOUNDATION PLAN
7. REINF. CONC. SLAB; SEE FOUNDATION PLAN
8. LOWER CEILING, SEE BASEMENT PLAN A100
9. INSULATION, SEE ECC01
10. ROOF RAFTERS, SEE FRAMING PLANS
11. GRADE BEAM, SEE FOUNDATION PLAN

NOTE:

1. VERIFY ALL EXTERIOR RISER & TREAD DIMENSIONS IN FIELD

GTM ARCHITECTS

7735 OLD GEORGETOWN ROAD
SUITE 700
BETHESDA, MD 20814
(240)333-2000
(240)333-2001 FAX
WWW.GTMARCHITECTS.COM

Seal

I certify that these documents were prepared or approved by me, and that I am a duly licensed architect under the laws of the State of Maryland, License number 3355, Expiration Date: 12-06-2024.

Consultant

Project
3929 WASHINGTON ST
3929 WASHINGTON ST. KESINGTON, MD 20895

Owner
TOM AND MAGGIE McCULLOUGH

Developer

Issue Description	Date
PERMIT SET	09-29-2023
PERMIT SET PROGRESS SET	08-29-2023
D.D. ELECTRICAL & LIGHTING SET	08-10-2023
DESIGN DEV'T PROGRESS SET	07-24-2023

GTM Project No.	23.0187
Checked By	GTM/ RJV
Drawn By	RJV/ CCM
Scale	AS NOTED

Sheet Title
BUILDING SECTION

Sheet No.
A301

APPROVED
Montgomery County
Historic Preservation Commission

REVIEWED
By Dan.Bruechert at 4:09 pm, Dec 18, 2023

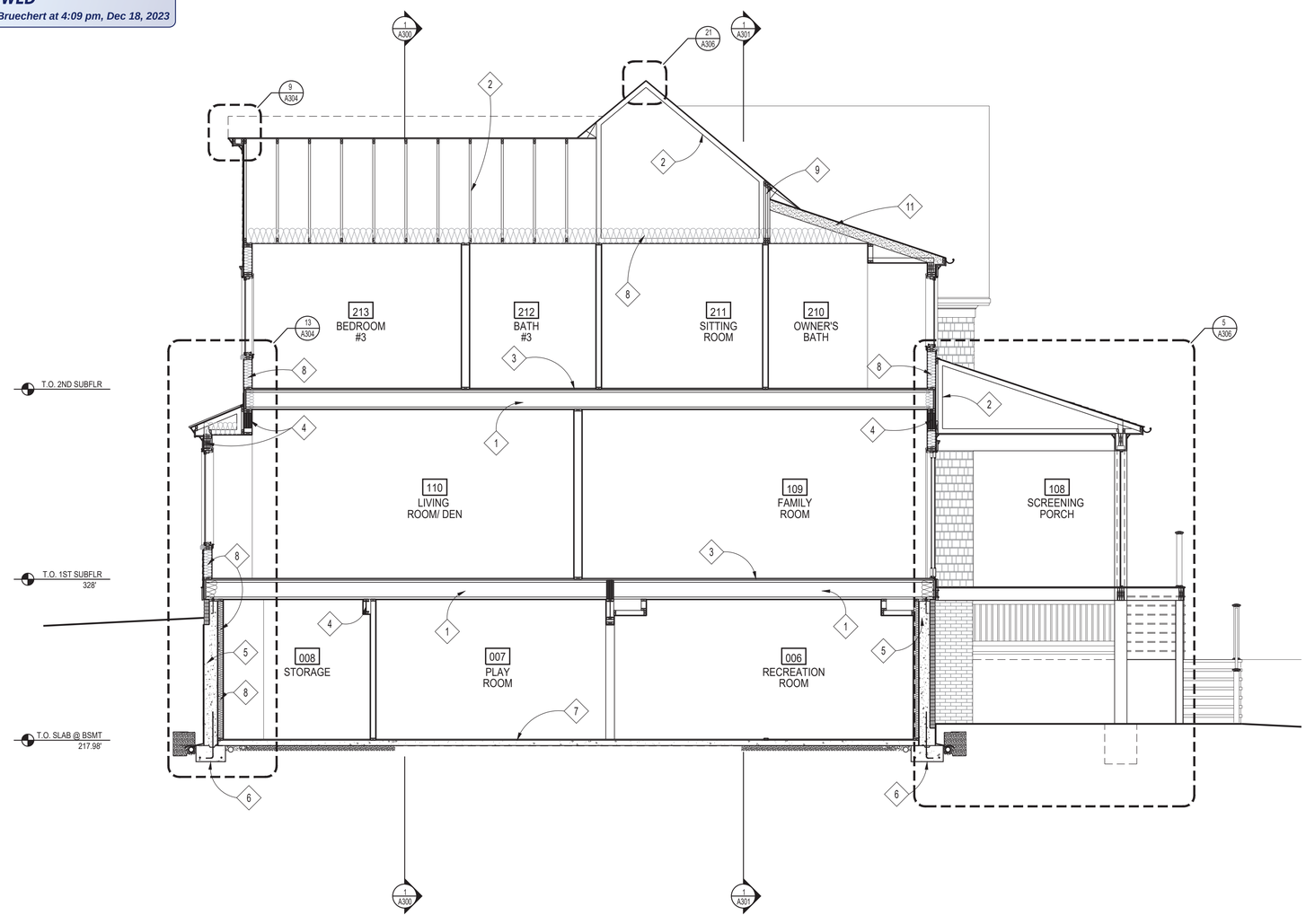

1 BUILDING SECTION

SCALE: 1/4"=1'-0"

SECTION NOTES

1. FLOOR JOISTS; SEE FRAMING PLANS
2. ROOF TRUSSES BY TRUSS MANUFACTURER; SEE FRAMING PLANS
3. 3/4" T&G PLYWD. SUBFLOOR; GLUED & SCREWED
4. BEAM; SEE FRAMING PLANS
5. CONCRETE FOUNDATION WALL; SEE FOUNDATION PLAN
6. FOOTING; SEE FOUNDATION PLAN
7. REINF. CONC. SLAB; SEE FOUNDATION PLAN
8. INSULATION, SEE ECC01
9. GIRDER TRUSS BY TRUSS MANUFACTURER; SEE FRAMING PLANS
10. GRADE BEAM, SEE FOUNDATION PLAN
11. ROOF RAFTERS, SEE FRAMING PLANS

NOTE:

1. VERIFY ALL EXTERIOR RISER & TREAD DIMENSIONS IN FIELD

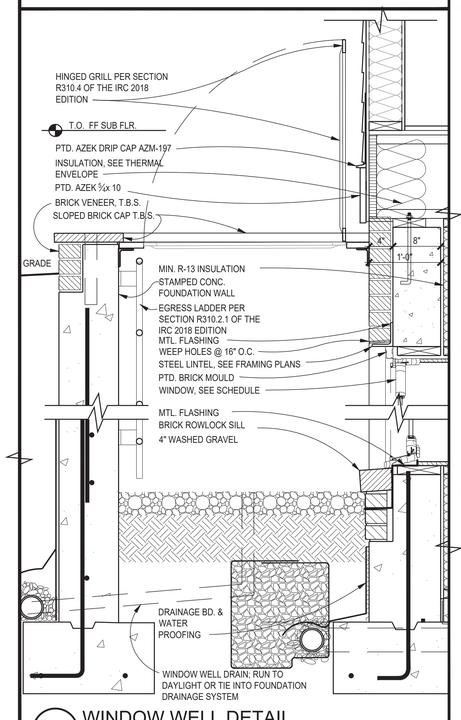

2 WINDOW WELL DETAIL

SCALE: 1"=1'-0"

???

(1X2)

GTM ARCHITECTS

7735 OLD GEORGETOWN ROAD
SUITE 700
BETHESDA, MD 20814
(240)333-2000
(240)333-2001 FAX
WWW.GTMARCHITECTS.COM

Seal

STATE OF MARYLAND — RICHARD J. VAN DOREN — No. 7192 — ARCHITECT

I certify that these documents were prepared or approved by me, and that I am a duly licensed architect under the laws of the State of Maryland, License number 7192, Expiration Date: 12-06-2024.

Consultant

Project

3929 WASHINGTON ST

3929 WASHINGTON ST. KESINGTON, MD 20895

Owner

TOM AND MAGGIE McCULLOUGH

Developer

Issue Description	Date
ASK-1	03-02-2021
PERMIT SET	09-29-2023
PERMIT SET PROGRESS SET	08-29-2023
D.D. ELECTRICAL & LIGHTING SET	08-10-2023
DESIGN DEV'T PROGRESS SET	07-24-2023

GTM Project No.	23.0187
Checked By	GTM/ RJV
Drawn By	RJV/ CCM
Scale	AS NOTED

Sheet Title

BUILDING SECTION

Sheet No.

A302

APPROVED
Montgomery County
Historic Preservation Commission

REVIEWED
By Dan.Bruechert at 4:09 pm, Dec 18, 2023

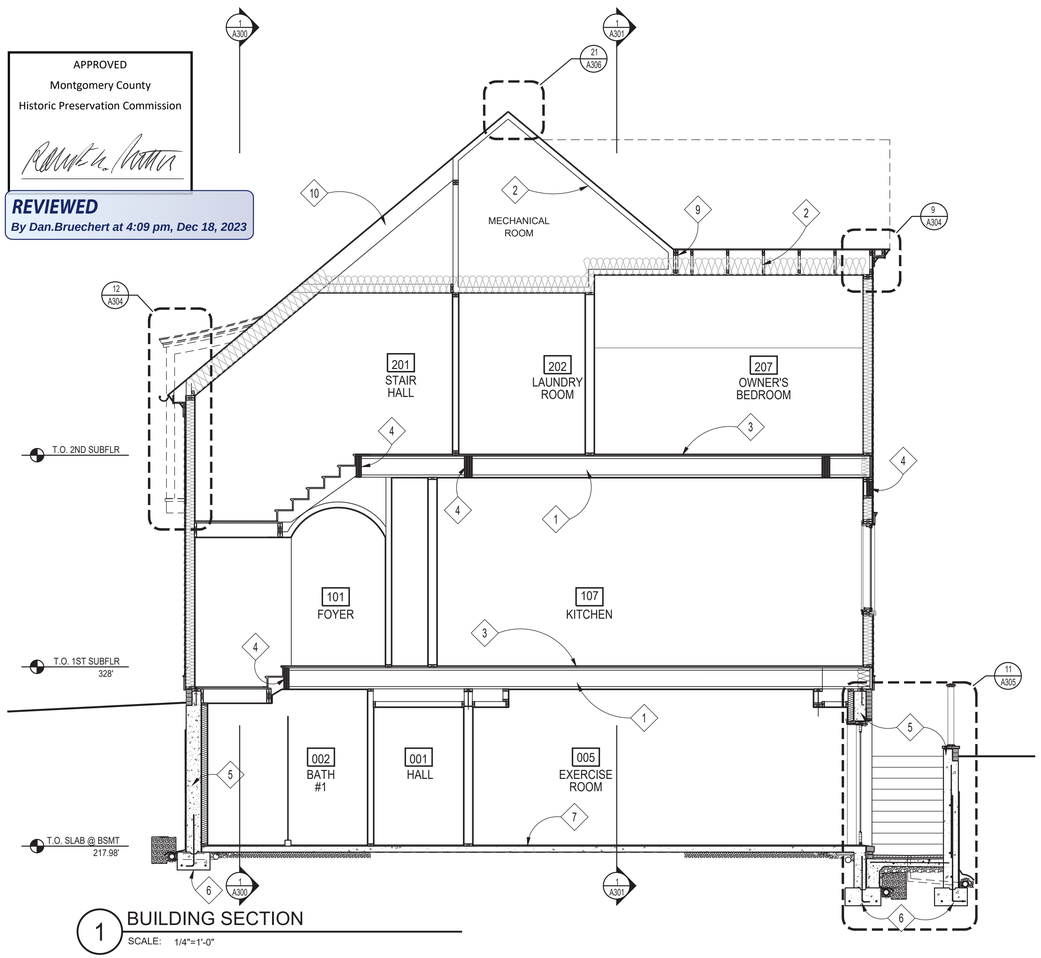

1 BUILDING SECTION
SCALE: 1/4"=1'-0"

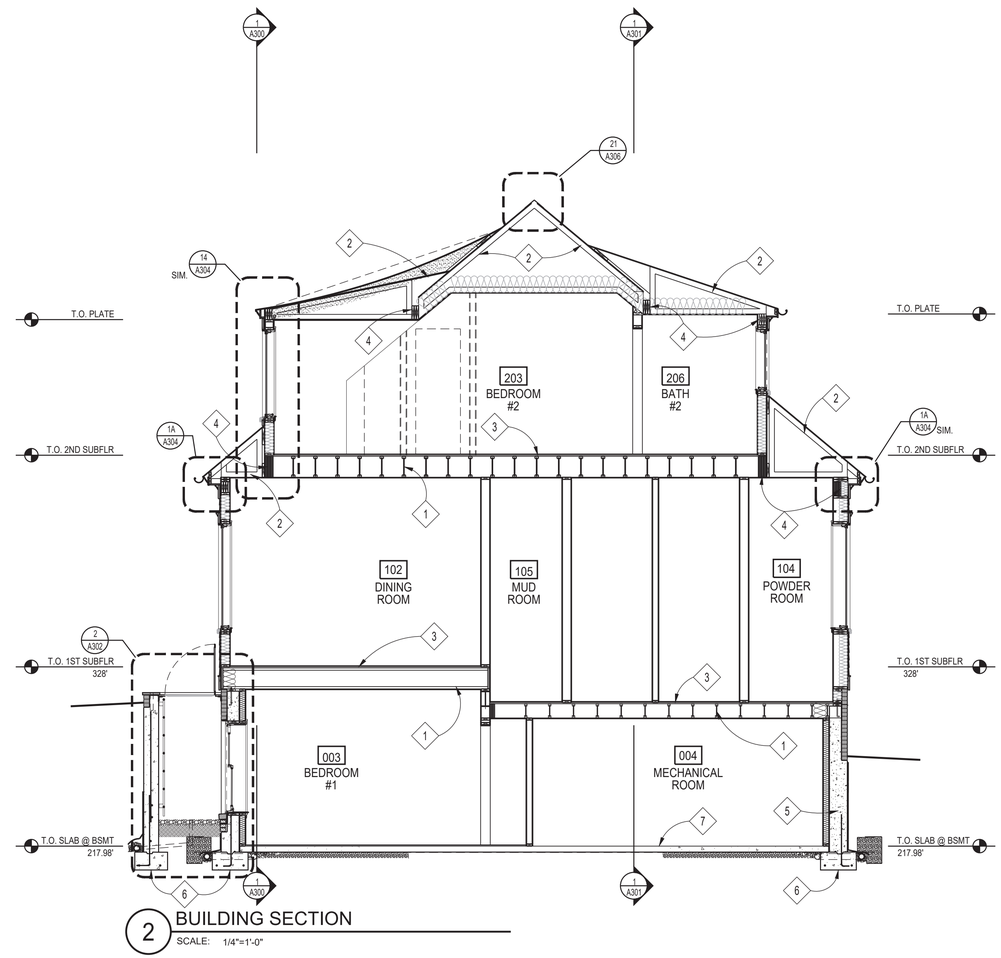

2 BUILDING SECTION
SCALE: 1/4"=1'-0"

SECTION NOTES

NOTE:
1. VERIFY ALL EXTERIOR RISER & TREAD DIMENSIONS IN FIELD

1. FLOOR JOISTS; SEE FRAMING PLANS
2. ROOF TRUSSES BY TRUSS MANUFACTURER; SEE FRAMING PLANS
3. 3/4" T&G PLYWD. SUBFLOOR; GLUED & SCREWED
4. BEAM; SEE FRAMING PLANS
5. CONCRETE FOUNDATION WALL; SEE FOUNDATION PLAN
6. FOOTING; SEE FOUNDATION PLAN
7. REINF. CONC. SLAB; SEE FOUNDATION PLAN
8. INSULATION, SEE ECC01
9. GIRDER TRUSS BY TRUSS MANUFACTURER; SEE FRAMING PLANS
10. ROOF RAFTERS, SEE FRAMING PLANS

GTM ARCHITECTS
7735 OLD GEORGETOWN ROAD
SUITE 700
BETHESDA, MD 20814
(240)333-2000
(240)333-2001 FAX
WWW.GTMARCHITECTS.COM

Seal

Consultant

Project
3929 WASHINGTON ST
3929 WASHINGTON ST. KESINGTON, MD 20895

Owner
TOM AND MAGGIE McCULLOUGH

Developer

Issue Description	Date
	03-02-2021
PERMIT SET	09-29-2023
PERMIT SET PROGRESS SET	08-29-2023
D.D. ELECTRICAL & LIGHTING SET	08-10-2023
DESIGN DEV'T PROGRESS SET	07-24-2023

GTM Project No.	23.0187
Checked By	GTM/ RJV
Drawn By	RJV/ CCM
Scale	AS NOTED

Sheet Title
BUILDING SECTIONS

Sheet No.
A303

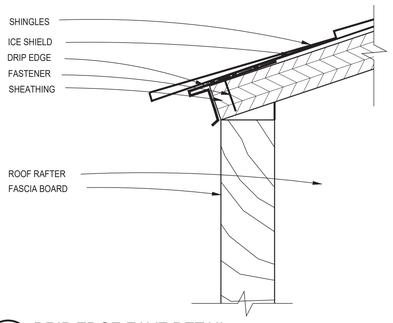

20 DRIP EDGE EAVE DETAIL
SCALE: 1"=1"
R04-051

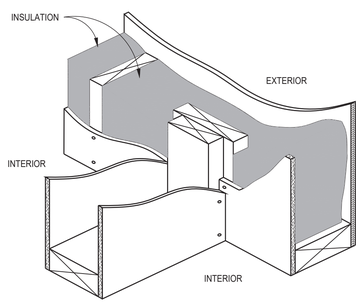

15 INTERSECTING WALL FRAMING DETAIL
SCALE: N.T.S.
R03-023 (1X1)

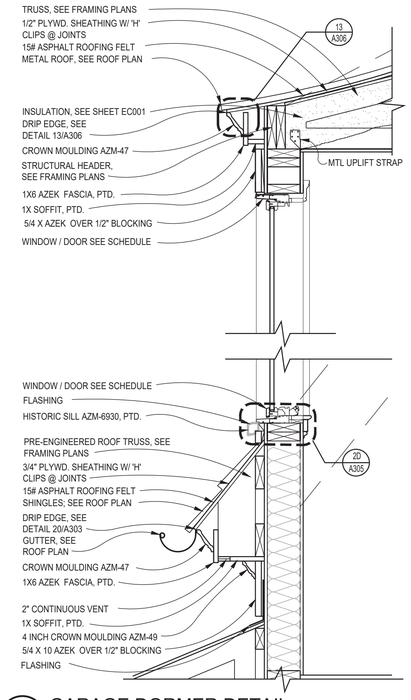

14 GARAGE DORMER DETAIL
SCALE: 1"=1'-0"
??? (1X2)

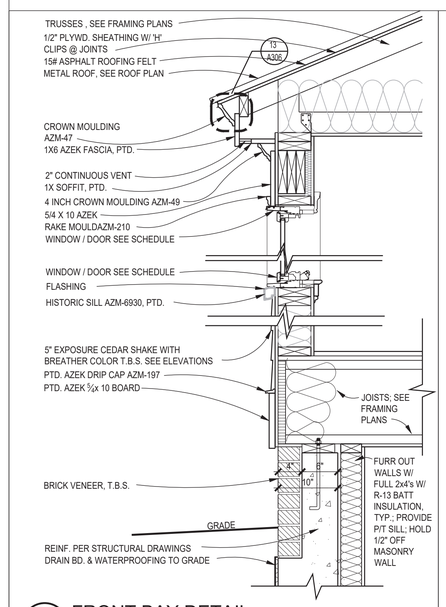

13 FRONT BAY DETAIL
SCALE: 1"=1'-0"
??? (1X2)

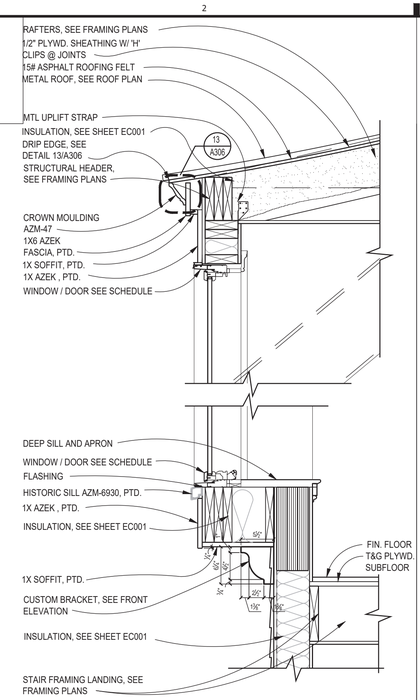

12 STAIR BAY DETAIL
SCALE: 1"=1'-0"
??? (1X2)

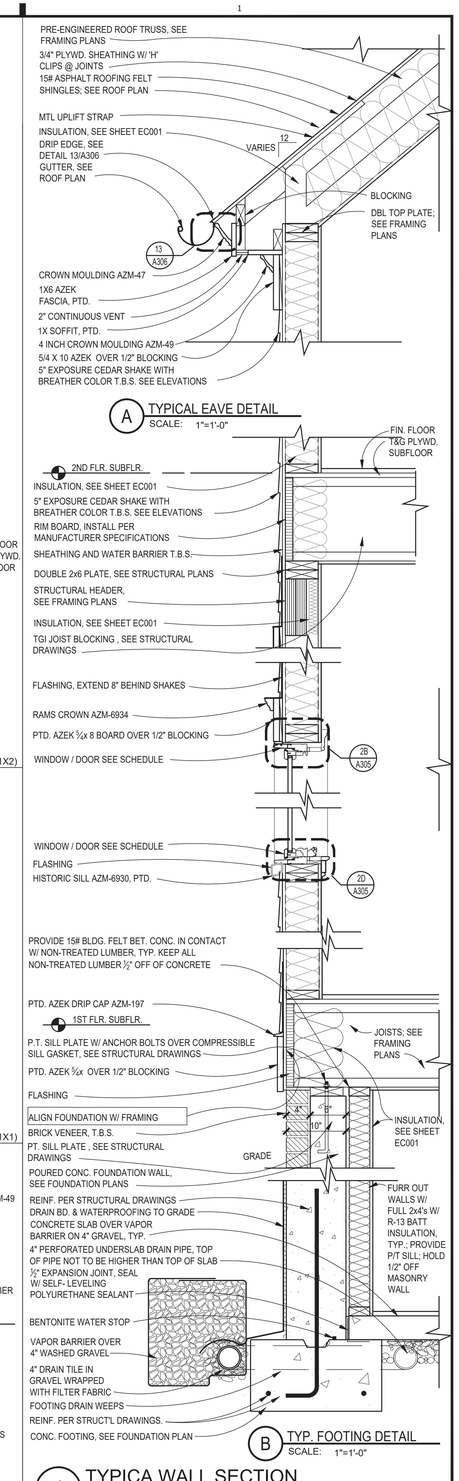

A TYPICAL EAVE DETAIL
SCALE: 1"=1'-0"

B TYP. FOOTING DETAIL
SCALE: 1"=1'-0"

1 TYPICA WALL SECTION
SCALE: 1"=1'-0"
??? (1X4)

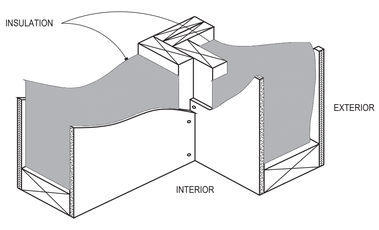

10 CORNER FRAMING DETAIL
SCALE: N.T.S.
R03-022 (1X1)

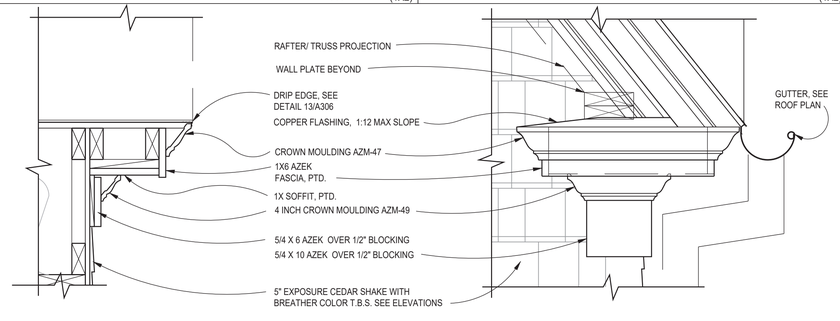

9 EAVE RETURN AND RAKE DETAILS
SCALE: 1 1/2"=1'-0"
??? (2X1)

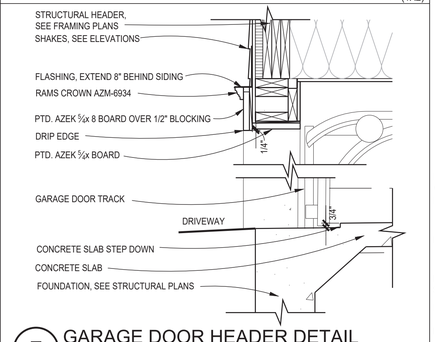

7 GARAGE DOOR HEADER DETAIL
SCALE: 1" = 1'=-0"
??? (1X1)

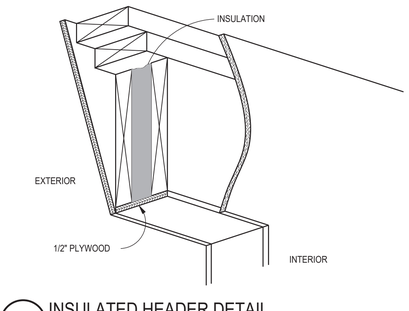

5 INSULATED HEADER DETAIL
SCALE: N.T.S.
R03-024 (1X1)

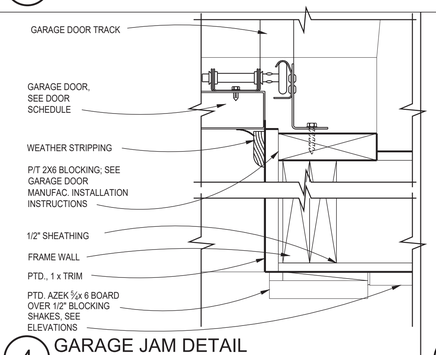

4 GARAGE JAM DETAIL
SCALE: 3" = 1'=-0"
??? (1X1)

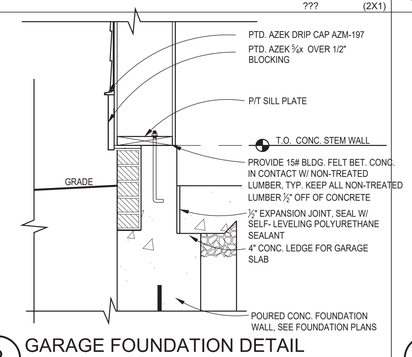

3 GARAGE FOUNDATION DETAIL
SCALE: 1" = 1'=-0"
??? (1X1)

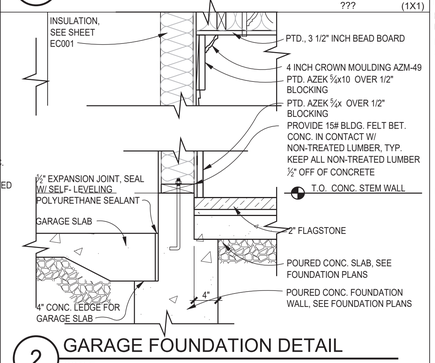

2 GARAGE FOUNDATION DETAIL
SCALE: 1" = 1'=-0"
??? (1X1)

FILE NAME:

APPROVED
Montgomery County
Historic Preservation Commission

REVIEWED
By Dan.Bruechert at 4:09 pm, Dec 18, 2023

GTM ARCHITECTS

7735 OLD GEORGETOWN ROAD
SUITE 700
BETHESDA, MD 20814
(240)333-2000
(240)333-2001 FAX
WWW.GTMARCHITECTS.COM

Seal

I certify that these documents were prepared or approved by me, and that I am a duly licensed architect under the laws of the State of Maryland. License number 5305, Expiration Date: 12-06-2024.

Consultant

Project
3929 WASHINGTON ST
3929 WASHINGTON ST. KESINGTON, MD 20895

Owner
TOM AND MAGGIE McCULLOUGH

Developer

Issue Description	Date
PERMIT SET	09-29-2023
PERMIT SET PROGRESS SET	08-29-2023
D.D. ELECTRICAL & LIGHTING SET	08-10-2023
DESIGN DEV'T PROGRESS SET	07-24-2023

GTM Project No.	23.0187
Checked By	GTM/ RJV
Drawn By	RJV/ CCM
Scale	AS NOTED

Sheet Title
DETAILS

Sheet No.
A304

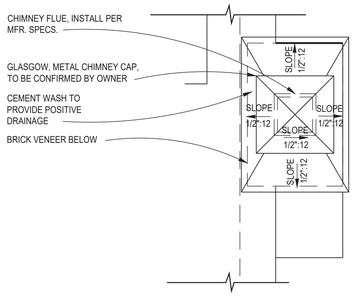

20 CHIMNEY AT ROOF PLAN

SCALE: 1/2" =1'-0"

???

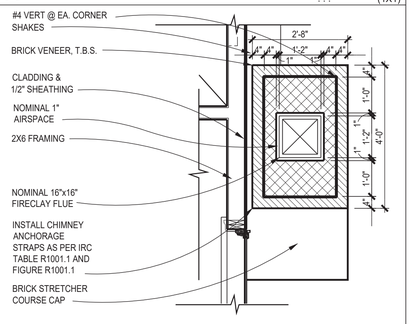

15 SECOND FLOOR CHIMNEY

SCALE: 1/2" =1'-0"

???

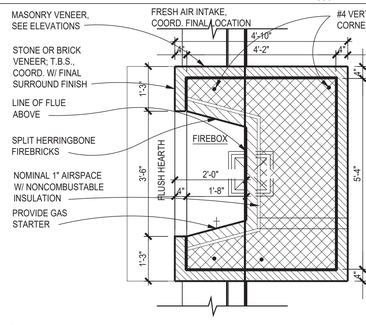

10 FIRST FLOOR FIREPLACE

SCALE: 1/2" =1'-0"

???

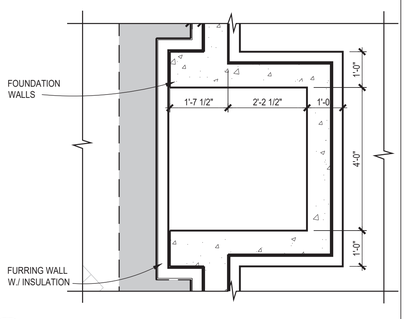

5 FIREPLACE FOUNDATION

SCALE: 1/2" =1'-0"

???

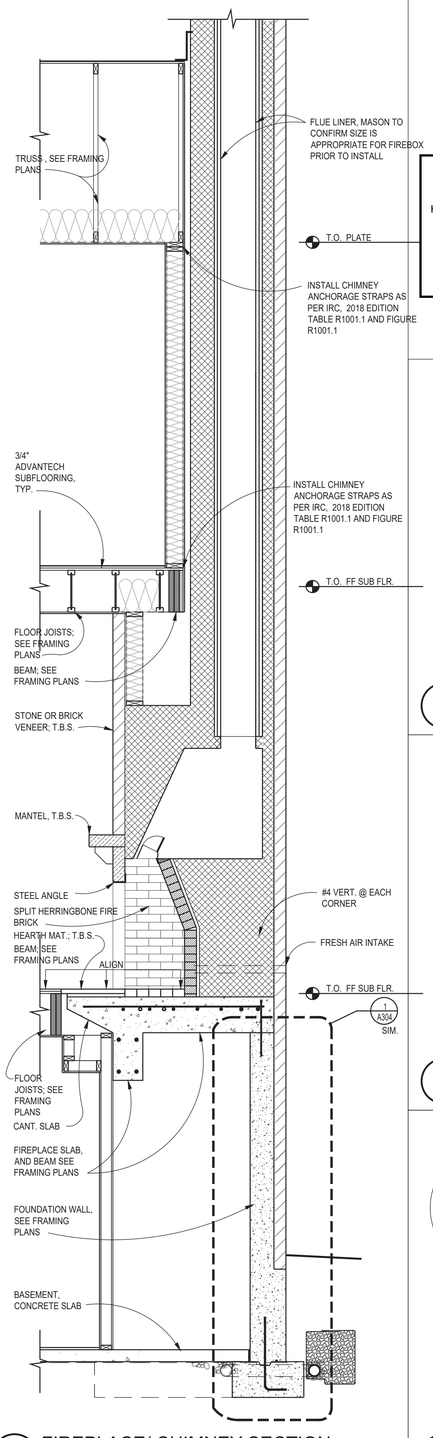

4 FIREPLACE/ CHIMNEY SECTION

SCALE: 1/4"=1'-0"

???

APPROVED
Montgomery County
Historic Preservation Commission

REVIEWED
By Dan.Bruechert at 4:08 pm, Dec 18, 2023

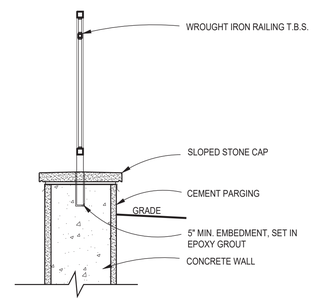

13 GUARD RAIL ATTACHMENT

SCALE: 3/4"=1'-0"

R08-046

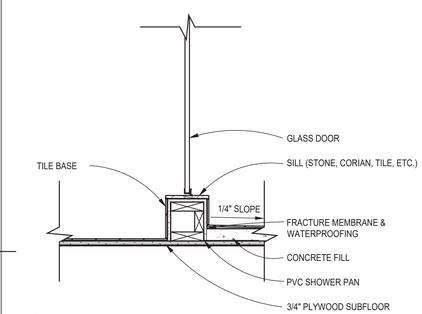

8 SECTION @ SHOWER CURB

SCALE: 1"=1'-0"

R06-047

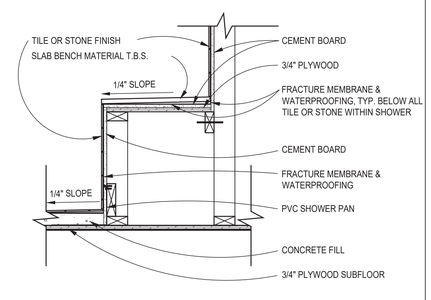

3 SECTION @ SHOWER BENCH

SCALE: 1"=1'-0"

R06-046

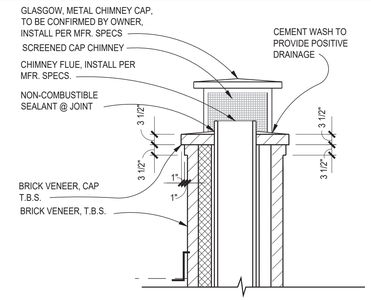

17 CHIMNEY CAP

SCALE: 1/2" =1'-0"

???

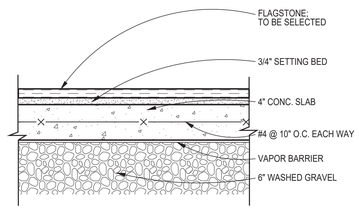

12 FLAGSTONE PATIO DETAIL

SCALE: 1 1/2" = 1'-0"

R08-016

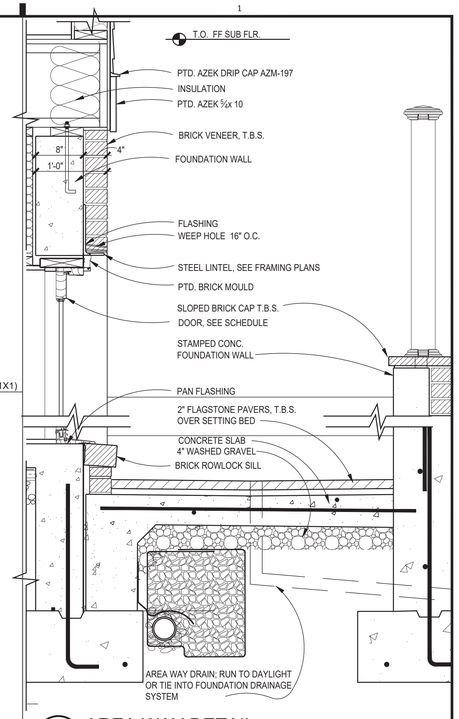

11 AREA WAY DETAIL

SCALE: 1"=1'-0"

???

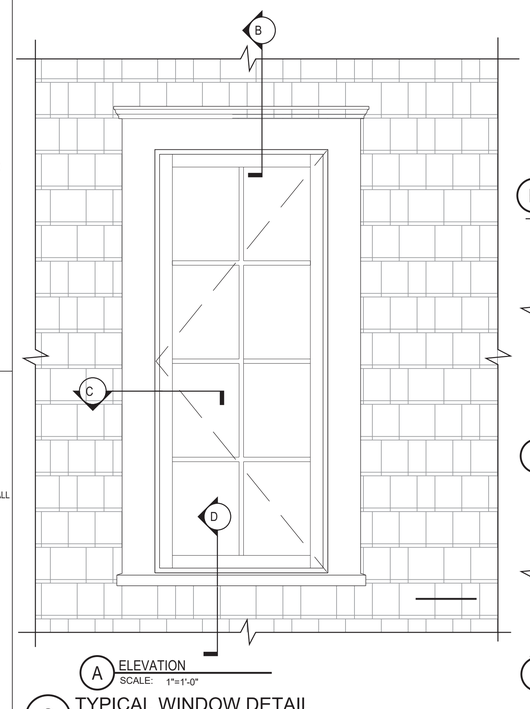

A ELEVATION

SCALE: 1"=1'-0"

2 TYPICAL WINDOW DETAIL

SCALE: 1" = 1'-0"

(2X2)

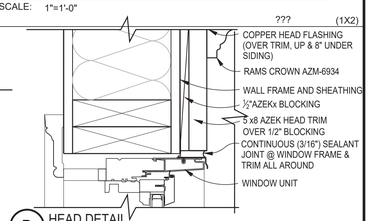

B HEAD DETAIL

SCALE: 3"=1'-0"

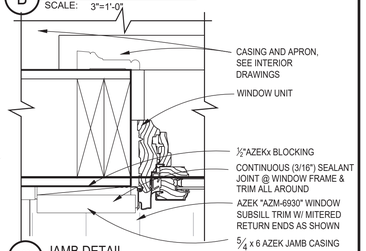

C JAMB DETAIL

SCALE: 3"=1'-0"

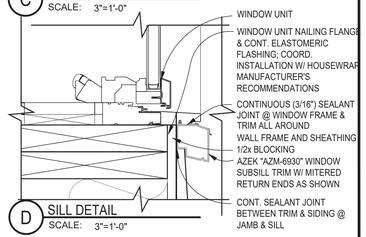

D SILL DETAIL

SCALE: 3"=1'-0"

GTM ARCHITECTS

7735 OLD GEORGETOWN ROAD
SUITE 700
BETHESDA, MD 20814
(240)333-2000
(240)333-2001 FAX
WWW.GTMARCHITECTS.COM

Seal

I certify that these documents were prepared or approved by me, and that I am a duly licensed architect under the laws of the State of Maryland. License number 5305, Expiration Date: 12-06-2024.

Consultant

Project

3929 WASHINGTON ST

3929 WASHINGTON ST. KESINGTON, MD 20895

Owner

TOM AND MAGGIE McCULLOUGH

Developer

Issue Description	Date
PERMIT SET	09-29-2023
PERMIT SET PROGRESS SET	08-29-2023
D.D. ELECTRICAL & LIGHTING SET	08-10-2023
DESIGN DEV'T PROGRESS SET	07-24-2023

GTM Project No.	23.0187
Checked By	GTM/ RJV
Drawn By	RJV/ CCM
Scale	AS NOTED

Sheet Title

DETAILS

Sheet No.

A305

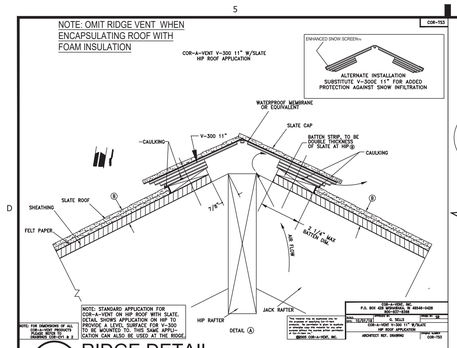

20 RIDGE DETAIL

SCALE: 1 1/2" = 1'-0"

??? (1X1)

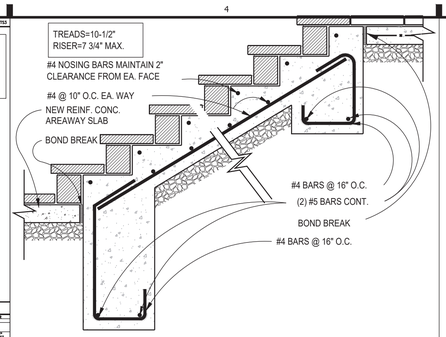

19 CONCRETE STAIR DETAIL

SCALE: 1"=1'-0"

R08-042

APPROVED
Montgomery County
Historic Preservation Commission

REVIEWED
By Dan.Bruechert at 4:09 pm, Dec 18, 2023

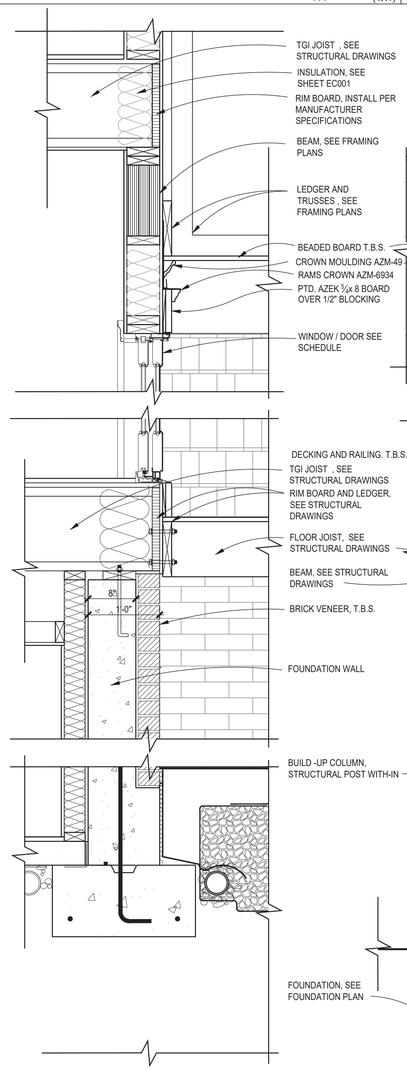

5 REAR PORCH

SCALE: 1 1/2"=1'-0"

??? (2X3)

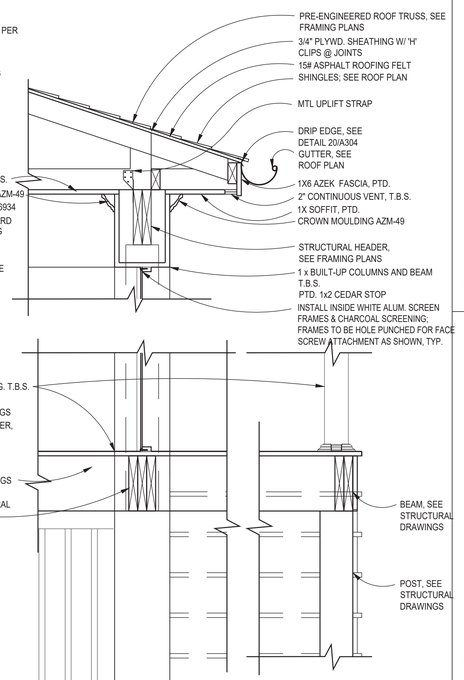

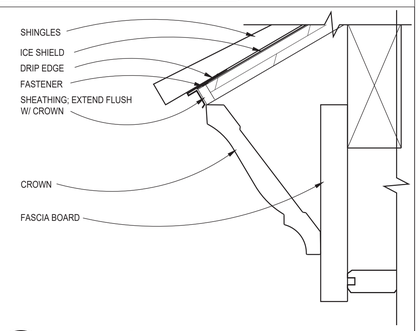

13 DRIP EDGE DETAIL

SCALE: 6"=1'-0"

(1X1)

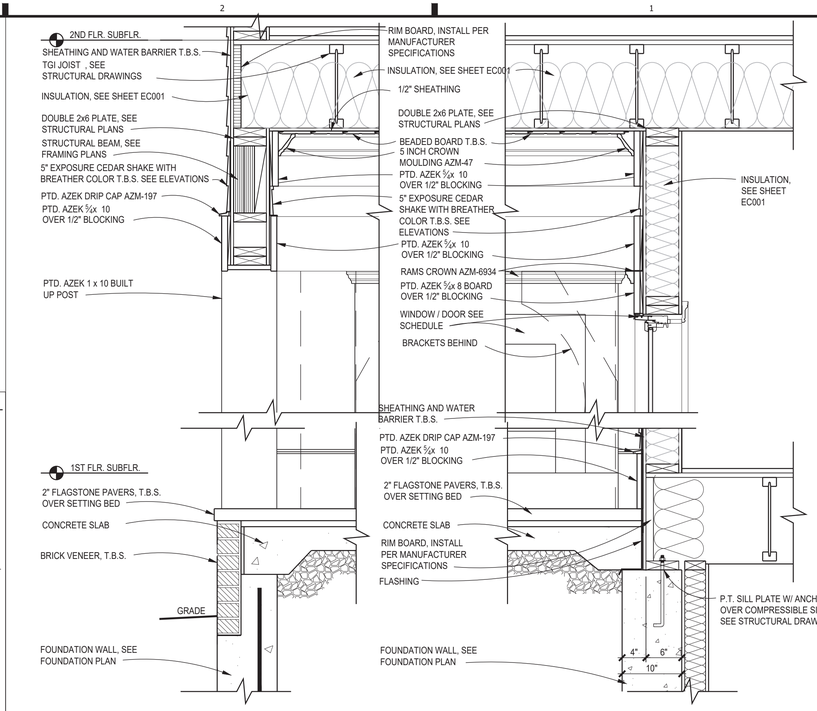

12 FRONT PORCH SECTION

SCALE: 1 1/2"=1'-0"

??? (2X2)

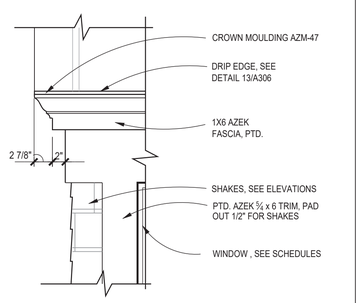

8 RAKE DETAIL AT DORMER

SCALE: 1" =1'-0"

??? (1X1)

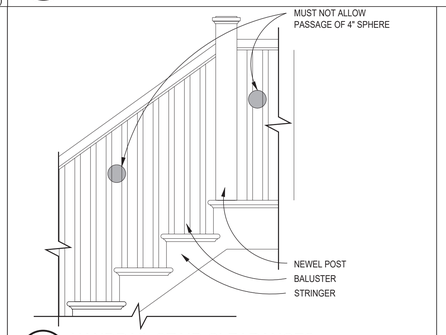

7 HANDRAIL STAIR CLEARANCES

SCALE: 3/4"=1'-0"

R08-046

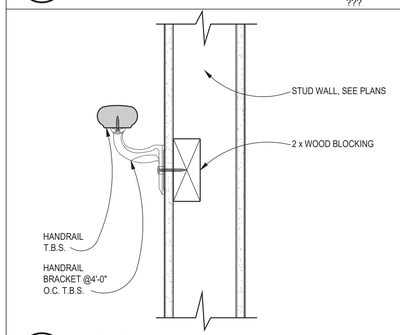

3 INTERIOR HANDRAIL DETAIL

SCALE: 3"=1'-0"

R08-044

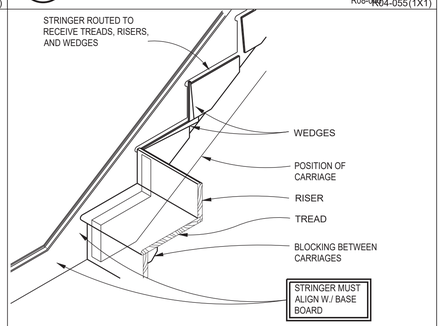

2 STAIR STRINGER

SCALE: 1"=1'-0"

R08-040

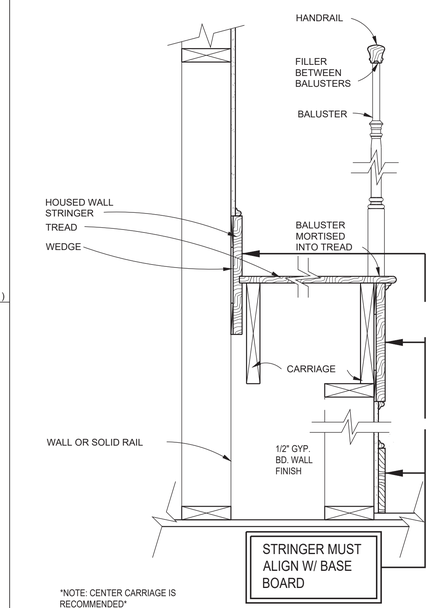

1 TYP. WOOD STAIR TRIM DETAIL

SCALE: 1 1/2"=1'-0"

R08-041

GTM ARCHITECTS
7735 OLD GEORGETOWN ROAD
SUITE 700
BETHESDA, MD 20814
(240)333-2000
(240)333-2001 FAX
WWW.GTMARCHITECTS.COM

Seal

I certify that these documents were prepared or approved by me, and that I am a duly licensed architect under the laws of the State of Maryland. License number 5055, Expiration Date: 12-06-2024.

Consultant

Project
3929 WASHINGTON ST
3929 WASHINGTON ST. KESINGTON, MD 20895

Owner
TOM AND MAGGIE McCULLOUGH

Developer

Issue Description	Date
PERMIT SET	09-29-2023
PERMIT SET PROGRESS SET	08-29-2023
D.D. ELECTRICAL & LIGHTING SET	08-10-2023
DESIGN DEV'T PROGRESS SET	07-24-2023

GTM Project No.	23.0187
Checked By	GTM/ RJV
Drawn By	RJV/ CCM
Scale	AS NOTED

Sheet Title
DETAILS

Sheet No.
A306

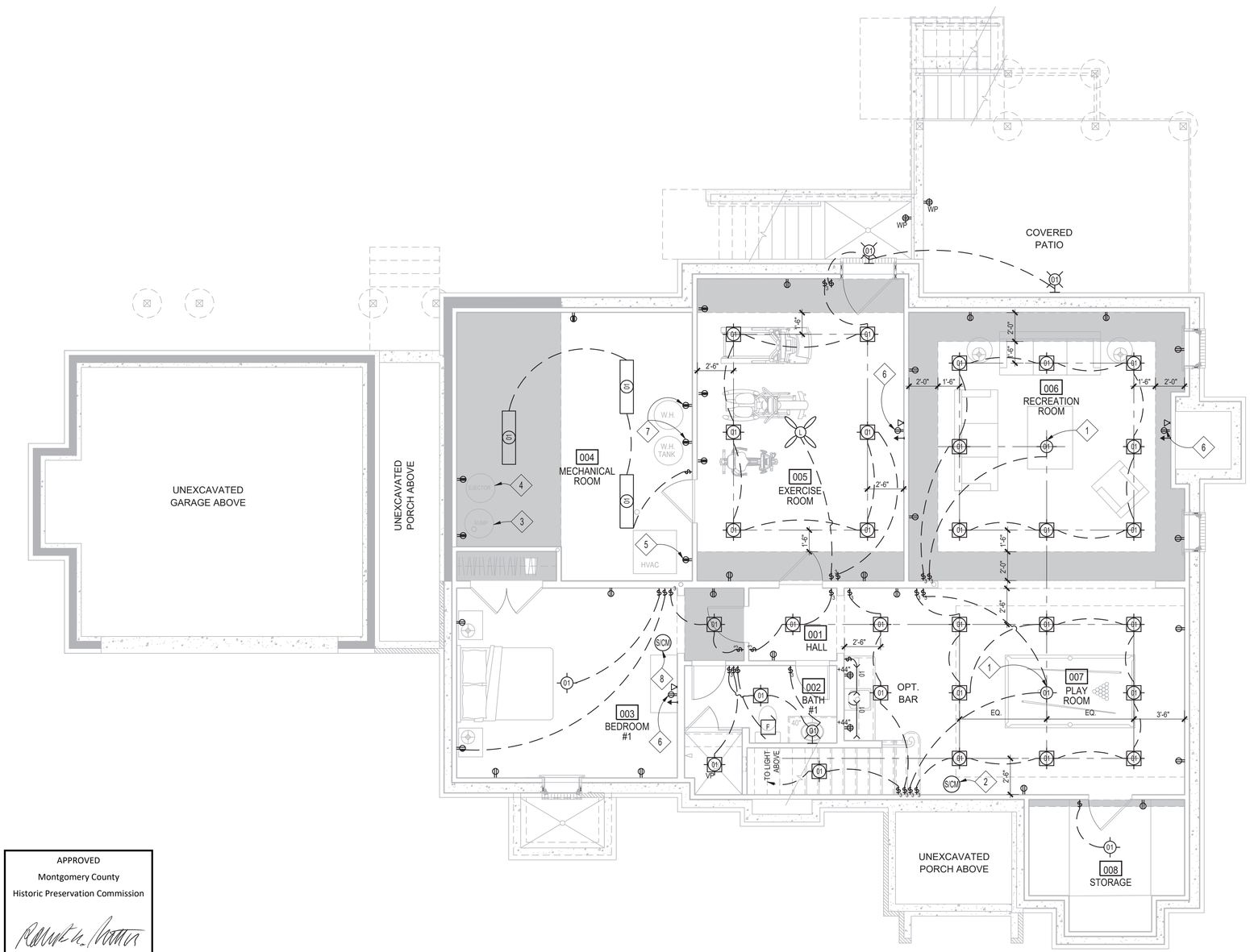

APPROVED
Montgomery County
Historic Preservation Commission

REVIEWED
By Dan.Bruechert at 4:13 pm, Dec 18, 2023

1 LOWER LEVEL ELECTRICAL PLAN
SCALE: 1/4"=1'-0"

ELECT. & LIGHTING SYMBOLS LEGEND

- CEILING FAN
- CEILING FAN W/ LIGHT KIT
- BATH EXHAUST FAN
- BATH EXHAUST FAN W/ LIGHT
- SURFACE MTD. FLUOR LIGHT FIXTURE
- RECESS MTD. LIGHT FIXTURE
- RECESS MTD. LIGHT FIXTURE, DIRECTIONAL
- RECESS MTD. LIGHT FIXTURE, VAPOR PROOF
- SURFACE (OR PENDANT) MTD. LIGHT FIXTURE
- WALL MTD. LIGHT FIXTURE
- WALL MTD. FLOOD LIGHT FIXTURE W/ MOTION DETECTOR
- UNDERCABINET LIGHT FIXTURE
- HARDWIRED SMOKE DETECTOR/ CARBON MONOXIDE COMBO UNIT WITH BATTERY BACKUP PER IRC
- TELEPHONE JACK
- DATA NETWORK JACK
- COAX SIGNAL JACK
- DUPLEX OUTLET
- APPLIANCE DUPLEX OUTLET
- SWITCHED DUPLEX OUTLET
- GFI DUPLEX OUTLET
- GFI DUPLEX OUTLET (WEATHERPROOF)
- FLOOR MTD. DUPLEX OUTLET
- FLOOR MTD. SWITCHED DUPLEX OUTLET
- 220V. OUTLET
- AUDIO SYSTEM SPEAKER JACK
- SINGLE POLE SWITCH
- SPEAKER CONTROL PANEL
- 3-WAY SWITCH
- 4-WAY SWITCH
- DISCONNECT SWITCH
- ELECTRIC SERVICE PANEL
- THERMOSTAT
- DOOR CHIME

LIGHTING SCHEDULE- BASEMENT LEVEL

SYMBOL TYPICAL	SYMBOL EXCEPTION	LOCATION	HOUSING/ TRIM	LAMPING/ NOTES
		ALL LOCATIONS ON THIS FLOOR, UNLESS SCHEDULED OTHERWISE	NORA LIGHTING 4 " LED, WHITE TRIM DIMMABLE 800LM	14W 2700K
VP		ALL LOCATIONS ON THIS FLOOR, UNLESS SCHEDULED OTHERWISE	NORA LIGHTING 4 " LED, WHITE TRIM DIMMABLE 800LM	14W 2700K - OUTDOOR RATED
F		ALL LOCATIONS ON THIS FLOOR, UNLESS SCHEDULED OTHERWISE	PANASONIC FV-0511VQC1 WHISPER SENSE	HVAC CONTRACTOR TO CONFIRM REQ'D. AIR VOLUME

* LIGHTS NOT SCHEDULED TO BE SELECTED BY OWNER

PLAN NOTES

1. COORDINATE PENDANT LIGHT FIXTURE LOCATION & DIMENSION A.F.F. WITH OWNER
2. HARDWIRED SMOKE DETECTOR/ CARBON MONOXIDE DETECTOR W/ BATTERY BACKUP PER IRC
3. PROVIDE DEDICATED OUTLET FOR SUMP PUMP
4. PROVIDE DEDICATED OUTLET FOR EJECTOR PUMP
5. PROVIDE DEDICATED OUTLET FOR HVAC
6. PROVIDE OUTLET & CABLE HOOK-UP FOR FLAT-SCREEN TV; COORDINATE LOCATION W/ OWNER
7. PROVIDE DEDICATED OUTLET FOR WATER HEATER
8. HARDWIRED SMOKE DETECTOR W/ BATTERY BACKUP PER IRC

GENERAL ELECTRICAL NOTES

1. ELECTRICAL CONTRACTOR TO PROVIDE NEW 400 AMP SERVICE WITH PANELS.

2. ELECTRICAL CONTRACTOR SHALL SIZE AND ARRANGE ALL CIRCUITS IN ACCORDANCE WITH THE NATIONAL ELECTRIC CODE AS WELL AS ALL LOCAL CODES.

3. WALL OUTLETS THROUGHOUT FIRST FLOOR ARE TO BE MOUNTED IN BASE BOARD. ALL OTHER WALL OUTLETS TO BE MOUNTED 1'-6" ABOVE FINISHED FLOOR, UNLESS NOTED OTHERWISE.

4. WALL OUTLETS AT WAINSCOT FINISH ROOMS SHALL BE LOCATED AT BASE BOARD.

5. SWITCHES ARE TO BE MOUNTED 4'-0" ABOVE FINISHED FLOOR, UNLESS NOTED OTHERWISE.

6. MOUNTING HEIGHTS ARE TO BE VERTICAL CENTER OF THE EQUIPMENT TO THE FINISHED ELEVATION OF THE FLOOR.

7. PROVIDE ELECTRICAL OUTLET AND SWITCH PRODUCTS SIMILAR TO DECORA BY LEVITON OR APPROVED EQUAL. ALL WALLPLATES TO BE SCREWLESS. ALL WALLPLATES NOT IN BASE BOARD TO BE PAINTED TO MATCH WALL COLOR. ALL SWITCH & OUTLET STYLES ARE TO BE APPROVED BY OWNER PRIOR TO INSTALLATION.

8. PROVIDE HARDWIRED SMOKE DETECTORS PER IRC SECTION R313 & LOCAL JURISDICTION AMENDMENTS.

9. ALL INTERIOR LIGHTS (EXCEPT IN BATHROOMS) SHALL HAVE DIMMERS.

10. ALL PHONE/DATA LOCATIONS TO BE UNDER ONE COMMON FACE PLATE.

11. ELECTRICIAN TO LOCATE ALL FIXTURES, SWITCHES, OUTLETS, ETC. PRIOR TO RUNNING WIRING. OWNER, ELECTRICIAN &ARCHITECT TO MEET AT A MUTUALLY AGREED UPON TIME TO REVIEW LOCATIONS.

12. OWNER IS ALLOWED TO ADD AN ADDITIONAL TEN (10) ITEMS; SWITCHES, CABLE, PHONE OUTLET, ETC. OR ANY COMBINATION AT NO ADDITIONAL CHARGE TO THE OWNER.

13. WIRE FOR AUDIO, COORDINATE W/ OWNER.

14. ALL 15 AND 20 AMP CIRCUITS TO BE CAFI PROTECTED, AND ALL RECEPTACLES TO BE TAMPER PROOF.

15. PROVIDE ARC FAULT RECEPTACLES IN ALL BEDROOMS.

GTM ARCHITECTS

7735 OLD GEORGETOWN ROAD
SUITE 700
BETHESDA, MD 20814
(240)333-2000
(240)333-2001 FAX
WWW.GTMARCHITECTS.COM

Seal

I certify that these documents were prepared or approved by me, and that I am a duly licensed architect under the laws of the State of Maryland, license number 8655, expiration date, 12/31/2024.

Consultant

Project
3929 WASHINGTON ST
3929 WASHINGTON ST. KESINGTON, MD 20895

Owner
TOM AND MAGGIE McCULLOUGH

Developer

Issue Description	Date
PERMIT SET	09-29-2023
PERMIT SET PROGRESS SET	08-29-2023
D.D. ELECTRICAL & LIGHTING SET	08-10-2023
DESIGN DEV'T PROGRESS SET	07-24-2023

GTM Project No.	23.0187
Checked By	GTM/ RJV
Drawn By	RJV/ CCM
Scale	AS NOTED

Sheet Title
BASEMENT POWER & LIGHTING PLAN

Sheet No.
E100

APPROVED
Montgomery County
Historic Preservation Commission

REVIEWED
By Dan.Bruechert at 4:14 pm, Dec 18, 2023

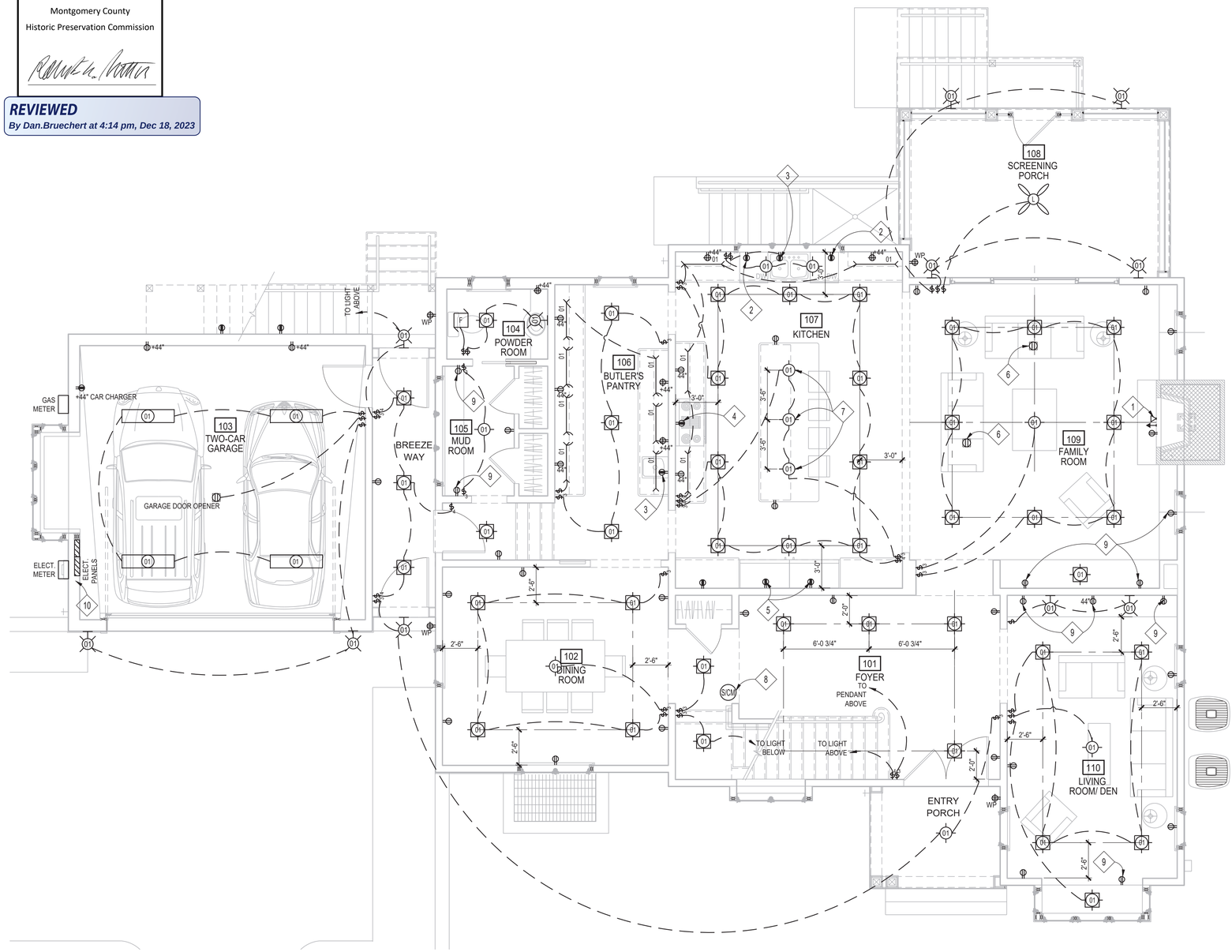

1 FIRST FLOOR ELECTRICAL PLAN
SCALE: 1/4"=1'-0"

PLAN NORTH

ELECT. & LIGHTING SYMBOLS LEGEND

- CEILING FAN
- CEILING FAN W/ LIGHT KIT
- BATH EXHAUST FAN
- BATH EXHAUST FAN W/ LIGHT
- SURFACE MTD. FLUOR LIGHT FIXTURE
- RECESS MTD. LIGHT FIXTURE
- RECESS MTD. LIGHT FIXTURE, DIRECTIONAL
- RECESS MTD. LIGHT FIXTURE, VAPOR PROOF
- SURFACE (OR PENDANT) MTD. LIGHT FIXTURE
- WALL MTD. LIGHT FIXTURE
- WALL MTD. FLOOD LIGHT FIXTURE W/ MOTION DETECTOR
- UNDERCABINET LIGHT FIXTURE
- HARDWIRED SMOKE DETECTOR/ CARBON MONOXIDE COMBO UNIT WITH BATTERY BACKUP PER IRC
- TELEPHONE JACK
- DATA NETWORK JACK
- COAX SIGNAL JACK
- DUPLEX OUTLET
- APPLIANCE DUPLEX OUTLET
- SWITCHED DUPLEX OUTLET
- GFI DUPLEX OUTLET
- GFI DUPLEX OUTLET (WEATHERPROOF)
- FLOOR MTD. DUPLEX OUTLET
- FLOOR MTD. SWITCHED DUPLEX OUTLET
- 220V. OUTLET
- AUDIO SYSTEM SPEAKER JACK
- SINGLE POLE SWITCH
- SPEAKER CONTROL PANEL
- 3-WAY SWITCH
- 4-WAY SWITCH
- DISCONNECT SWITCH
- ELECTRIC SERVICE PANEL
- THERMOSTAT
- DOOR CHIME

LIGHTING SCHEDULE - FIRST FLOOR

SYMBOL TYPICAL	SYMBOL EXCEPTION	LOCATION	HOUSING/ TRIM	LAMPING/ NOTES
		ALL LOCATIONS ON THIS FLOOR, UNLESS SCHEDULED OTHERWISE	NORA LIGHTING 4 " LED, WHITE TRIM DIMMABLE 800LM	14W 2700K
VP		ALL LOCATIONS ON THIS FLOOR, UNLESS SCHEDULED OTHERWISE	NORA LIGHTING 4 " LED, WHITE TRIM DIMMABLE 800LM	14W 2700K - OUTDOOR RATED
F		ALL LOCATIONS ON THIS FLOOR, UNLESS SCHEDULED OTHERWISE	PANASONIC FV-0511VQC1 WHISPER SENSE	HVAC CONTRACTOR TO CONFIRM REQ'D. AIR VOLUME

* LIGHTS NOT SCHEDULED TO BE SELECTED BY OWNER

PLAN NOTES

1. PROVIDE OUTLET & CABLE HOOK-UP FOR FLAT-SCREEN TV; COORDINATE LOCATION W/ OWNER
2. PROVIDE DEDICATED OUTLET FOR DISHWASHER
3. PROVIDE DEDICATED OUTLET FOR GARBAGE DISPOSAL
4. PROVIDE DEDICATED OUTLET FOR HOOD
5. PROVIDE DEDICATED OUTLET FOR REFRIGERATOR
6. COORDINATE FLOOR OUTLET LOCATION W/ OWNER
7. COORDINATE PENDANT LIGHT FIXTURE LOCATION & DIMENSION A.F.F. WITH OWNER
8. HARDWIRED SMOKE DETECTOR/ CARBON MONOXIDE DETECTOR W/ BATTERY BACKUP PER IRC
9. COORDINATE OUTLET LOCATION WITH BUILT-INS
10. PROPOSED LOCATION OF ELECTRICAL PANELS

GENERAL ELECTRICAL NOTES

1. ELECTRICAL CONTRACTOR TO PROVIDE NEW 400 AMP SERVICE WITH PANELS.

2. ELECTRICAL CONTRACTOR SHALL SIZE AND ARRANGE ALL CIRCUITS IN ACCORDANCE WITH THE NATIONAL ELECTRIC CODE AS WELL AS ALL LOCAL CODES.

3. WALL OUTLETS THROUGHOUT FIRST FLOOR ARE TO BE MOUNTED IN BASE BOARD. ALL OTHER WALL OUTLETS TO BE MOUNTED 1'-6" ABOVE FINISHED FLOOR, UNLESS NOTED OTHERWISE.

4. WALL OUTLETS AT WAINSCOT FINISH ROOMS SHALL BE LOCATED AT BASE BOARD.

5. SWITCHES ARE TO BE MOUNTED 4'-0" ABOVE FINISHED FLOOR, UNLESS NOTED OTHERWISE.

6. MOUNTING HEIGHTS ARE TO BE VERTICAL CENTER OF THE EQUIPMENT TO THE FINISHED ELEVATION OF THE FLOOR.

7. PROVIDE ELECTRICAL OUTLET AND SWITCH PRODUCTS SIMILAR TO DECORA BY LEVITON OR APPROVED EQUAL. ALL WALLPLATES TO BE SCREWLESS. ALL WALLPLATES NOT IN BASE BOARD TO BE PAINTED TO MATCH WALL COLOR. ALL SWITCH & OUTLET STYLES ARE TO BE APPROVED BY OWNER PRIOR TO INSTALLATION.

8. PROVIDE HARDWIRED SMOKE DETECTORS PER IRC SECTION R313 & LOCAL JURISDICTION AMENDMENTS.

9. ALL INTERIOR LIGHTS (EXCEPT IN BATHROOMS) SHALL HAVE DIMMERS.

10. ALL PHONE/DATA LOCATIONS TO BE UNDER ONE COMMON FACE PLATE.

11. ELECTRICIAN TO LOCATE ALL FIXTURES, SWITCHES, OUTLETS, ETC. PRIOR TO RUNNING WIRING. OWNER, ELECTRICIAN &ARCHITECT TO MEET AT A MUTUALLY AGREED UPON TIME TO REVIEW LOCATIONS.

12. OWNER IS ALLOWED TO ADD AN ADDITIONAL TEN (10) ITEMS; SWITCHES, CABLE, PHONE OUTLET, ETC. OR ANY COMBINATION AT NO ADDITIONAL CHARGE TO THE OWNER.

13. WIRE FOR AUDIO, COORDINATE W/ OWNER.

14. ALL 15 AND 20 AMP CIRCUITS TO BE CAFI PROTECTED, AND ALL RECEPTACLES TO BE TAMPER PROOF.

15. PROVIDE ARC FAULT RECEPTACLES IN ALL BEDROOMS.

GTM ARCHITECTS
7735 OLD GEORGETOWN ROAD
SUITE 700
BETHESDA, MD 20814
(240)333-2000
(240)333-2001 FAX
WWW.GTMARCHITECTS.COM

Seal

I certify that these documents were prepared or approved by me, and that I am a duly licensed architect under the laws of the State of Maryland, license number 9365.

Consultant

Project
3929 WASHINGTON ST
3929 WASHINGTON ST. KESINGTON, MD 2089

Owner
TOM AND MAGGIE McCULLOUGH

Developer

Issue Description	Date
PERMIT SET	09-29-2023
PERMIT SET PROGRESS SET	08-29-2023
D.D. ELECTRICAL & LIGHTING SET	08-10-2023
DESIGN DEVT PROGRESS SET	07-24-2023

GTM Project No.	23.0187
Checked By	GTM/ RJV
Drawn By	RJV/ CCM
Scale	AS NOTED

Sheet Title
1ST FLOOR POWE
& LIGHTING PLAN

Sheet No.
E101

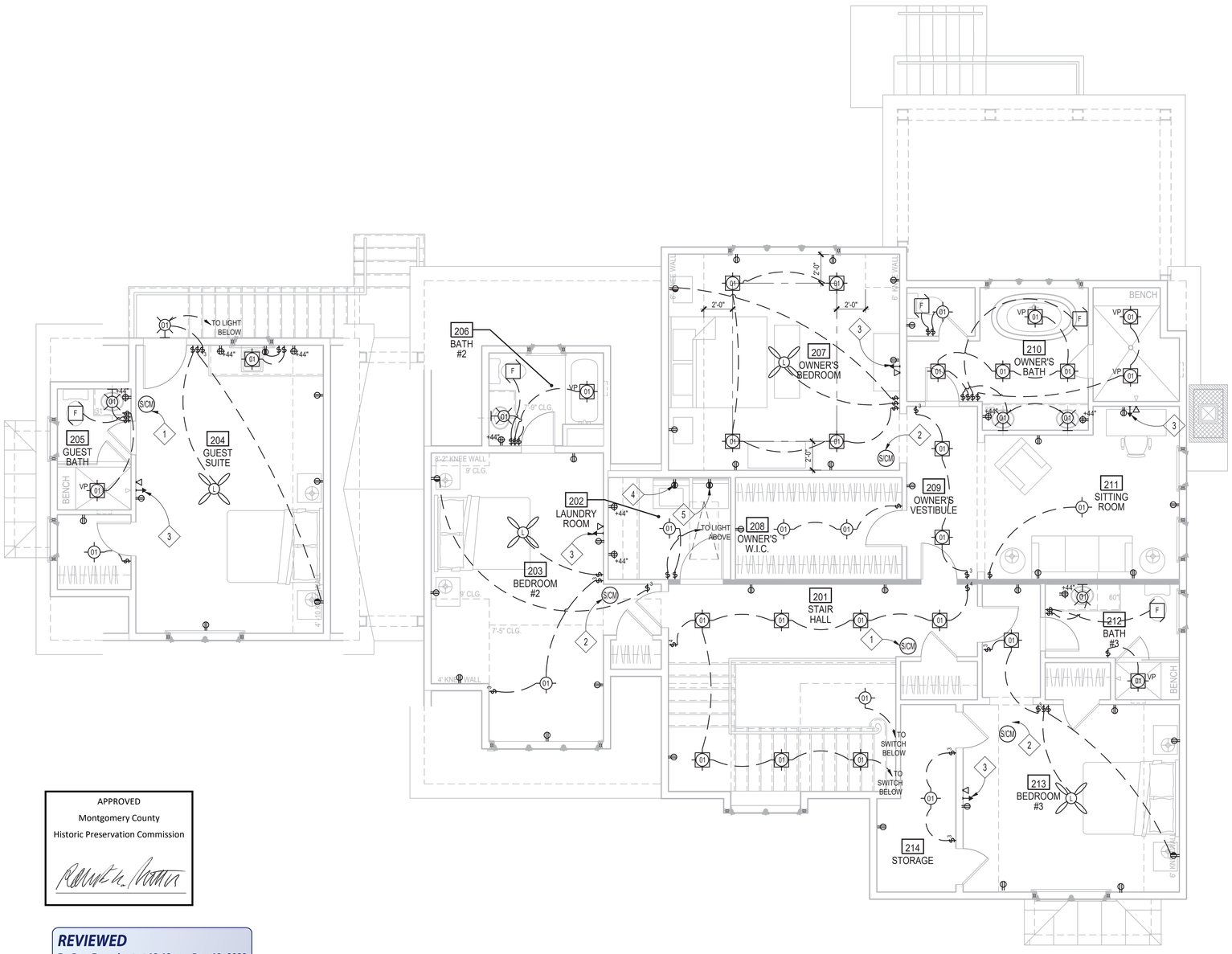

APPROVED
Montgomery County
Historic Preservation Commission

REVIEWED
By Dan.Bruechert at 10:18 am, Dec 19, 2023

1 SECOND FLOOR ELECTRICAL PLAN
SCALE: 1/4"=1'-0"

ELECT. & LIGHTING SYMBOLS LEGEND

- CEILING FAN
- CEILING FAN W/ LIGHT KIT
- BATH EXHAUST FAN
- F/L — BATH EXHAUST FAN W/ LIGHT
- SURFACE MTD. FLUOR LIGHT FIXTURE
- RECESS MTD. LIGHT FIXTURE
- DIR — RECESS MTD. LIGHT FIXTURE, DIRECTIONAL
- VP — RECESS MTD. LIGHT FIXTURE, VAPOR PROOF
- SURFACE (OR PENDANT) MTD. LIGHT FIXTURE
- WALL MTD. LIGHT FIXTURE
- WALL MTD. FLOOD LIGHT FIXTURE W/ MOTION DETECTOR
- UNDERCABINET LIGHT FIXTURE
- S/CM — HARDWIRED SMOKE DETECTOR/ CARBON MONOXIDE COMBO UNIT WITH BATTERY BACKUP PER IRC
- TELEPHONE JACK
- DATA NETWORK JACK
- COAX SIGNAL JACK
- DUPLEX OUTLET
- APPLIANCE DUPLEX OUTLET
- SWITCHED DUPLEX OUTLET
- GFI DUPLEX OUTLET
- WP — GFI DUPLEX OUTLET (WEATHERPROOF)
- FLOOR MTD. DUPLEX OUTLET
- FLOOR MTD. SWITCHED DUPLEX OUTLET
- 220V. OUTLET
- AUDIO SYSTEM SPEAKER JACK
- SINGLE POLE SWITCH
- SC — SPEAKER CONTROL PANEL
- 3 — 3-WAY SWITCH
- 4 — 4-WAY SWITCH
- DISCONNECT SWITCH
- ELECTRIC SERVICE PANEL
- T — THERMOSTAT
- DOOR CHIME

LIGHTING SCHEDULE - SECOND FLOOR

SYMBOL TYPICAL	SYMBOL EXCEPTION	LOCATION	HOUSING/ TRIM	LAMPING/ NOTES
		ALL LOCATIONS ON THIS FLOOR, UNLESS SCHEDULED OTHERWISE	NORA LIGHTING 4 " LED, WHITE TRIM DIMMABLE 800LM	14W 2700K
VP		ALL LOCATIONS ON THIS FLOOR, UNLESS SCHEDULED OTHERWISE	NORA LIGHTING 4 " LED, WHITE TRIM DIMMABLE 800LM	14W 2700K - OUTDOOR RATED
3		ALL LOCATIONS ON THIS FLOOR, UNLESS SCHEDULED OTHERWISE	PANASONIC FV-0511VQC1 WHISPER SENSE	HVAC CONTRACTOR TO CONFIRM REQ'D. AIR VOLUME

* LIGHTS NOT SCHEDULED TO BE SELECTED BY OWNER

PLAN NOTES

1. HARDWIRED SMOKE DETECTOR/ CARBON MONOXIDE DETECTOR W/ BATTERY BACKUP PER IRC
2. HARDWIRED SMOKE DETECTOR W/ BATTERY BACKUP PER IRC
3. PROVIDE OUTLET & CABLE HOOK-UP FOR TV; COORDINATE MOUNTING HEIGHT W/ OWNER
4. PROVIDE DEDICATED OUTLET FOR WASHER
5. PROVIDE DEDICATED OUTLET FOR DRYER

GENERAL ELECTRICAL NOTES

1. ELECTRICAL CONTRACTOR TO PROVIDE NEW 400 AMP SERVICE WITH PANELS.
2. ELECTRICAL CONTRACTOR SHALL SIZE AND ARRANGE ALL CIRCUITS IN ACCORDANCE WITH THE NATIONAL ELECTRIC CODE AS WELL AS ALL LOCAL CODES.
3. WALL OUTLETS THROUGHOUT FIRST FLOOR ARE TO BE MOUNTED IN BASE BOARD. ALL OTHER WALL OUTLETS TO BE MOUNTED 1'-6" ABOVE FINISHED FLOOR, UNLESS NOTED OTHERWISE.
4. WALL OUTLETS AT WAINSCOT FINISH ROOMS SHALL BE LOCATED AT BASE BOARD.
5. SWITCHES ARE TO BE MOUNTED 4'-0" ABOVE FINISHED FLOOR, UNLESS NOTED OTHERWISE.
6. MOUNTING HEIGHTS ARE TO BE VERTICAL CENTER OF THE EQUIPMENT TO THE FINISHED ELEVATION OF THE FLOOR.
7. PROVIDE ELECTRICAL OUTLET AND SWITCH PRODUCTS SIMILAR TO DECORA BY LEVITON OR APPROVED EQUAL. ALL WALLPLATES TO BE SCREWLESS. ALL WALLPLATES NOT IN BASE BOARD TO BE PAINTED TO MATCH WALL COLOR. ALL SWITCH & OUTLET STYLES ARE TO BE APPROVED BY OWNER PRIOR TO INSTALLATION.
8. PROVIDE HARDWIRED SMOKE DETECTORS PER IRC SECTION R313 & LOCAL JURISDICTION AMENDMENTS.
9. ALL INTERIOR LIGHTS (EXCEPT IN BATHROOMS) SHALL HAVE DIMMERS.
10. ALL PHONE/DATA LOCATIONS TO BE UNDER ONE COMMON FACE PLATE.
11. ELECTRICIAN TO LOCATE ALL FIXTURES, SWITCHES, OUTLETS, ETC. PRIOR TO RUNNING WIRING. OWNER, ELECTRICIAN &ARCHITECT TO MEET AT A MUTUALLY AGREED UPON TIME TO REVIEW LOCATIONS.
12. OWNER IS ALLOWED TO ADD AN ADDITIONAL TEN (10) ITEMS; SWITCHES, CABLE, PHONE OUTLET, ETC. OR ANY COMBINATION AT NO ADDITIONAL CHARGE TO THE OWNER.
13. WIRE FOR AUDIO, COORDINATE W/ OWNER.
14. ALL 15 AND 20 AMP CIRCUITS TO BE CAFI PROTECTED, AND ALL RECEPTACLES TO BE TAMPER PROOF.
15. PROVIDE ARC FAULT RECEPTACLES IN ALL BEDROOMS.

GTM ARCHITECTS

7735 OLD GEORGETOWN ROAD
SUITE 700
BETHESDA, MD 20814
(240)333-2000
(240)333-2001 FAX
WWW.GTMARCHITECTS.COM

Seal

I certify that these documents were prepared or approved by me, and that I am a duly licensed architect under the laws of the State of Maryland, license number 8655, expiration date, 1/30/2024.

Consultant

Project
3929 WASHINGTON ST
3929 WASHINGTON ST. KESINGTON, MD 20895

Owner
TOM AND MAGGIE McCULLOUGH

Developer

Issue Description	Date
PERMIT SET	09-29-2023
PERMIT SET PROGRESS SET	08-29-2023
D.D. ELECTRICAL & LIGHTING SET	08-10-2023
DESIGN DEV'T PROGRESS SET	07-24-2023

GTM Project No.	23.0187
Checked By	GTM/ RJV
Drawn By	RJV/ CCM
Scale	AS NOTED

Sheet Title
2ND FLOOR POWER & LIGHTING PLAN

Sheet No.
E102

APPROVED
Montgomery County
Historic Preservation Commission

REVIEWED
By Dan.Bruechert at 4:14 pm, Dec 18, 2023

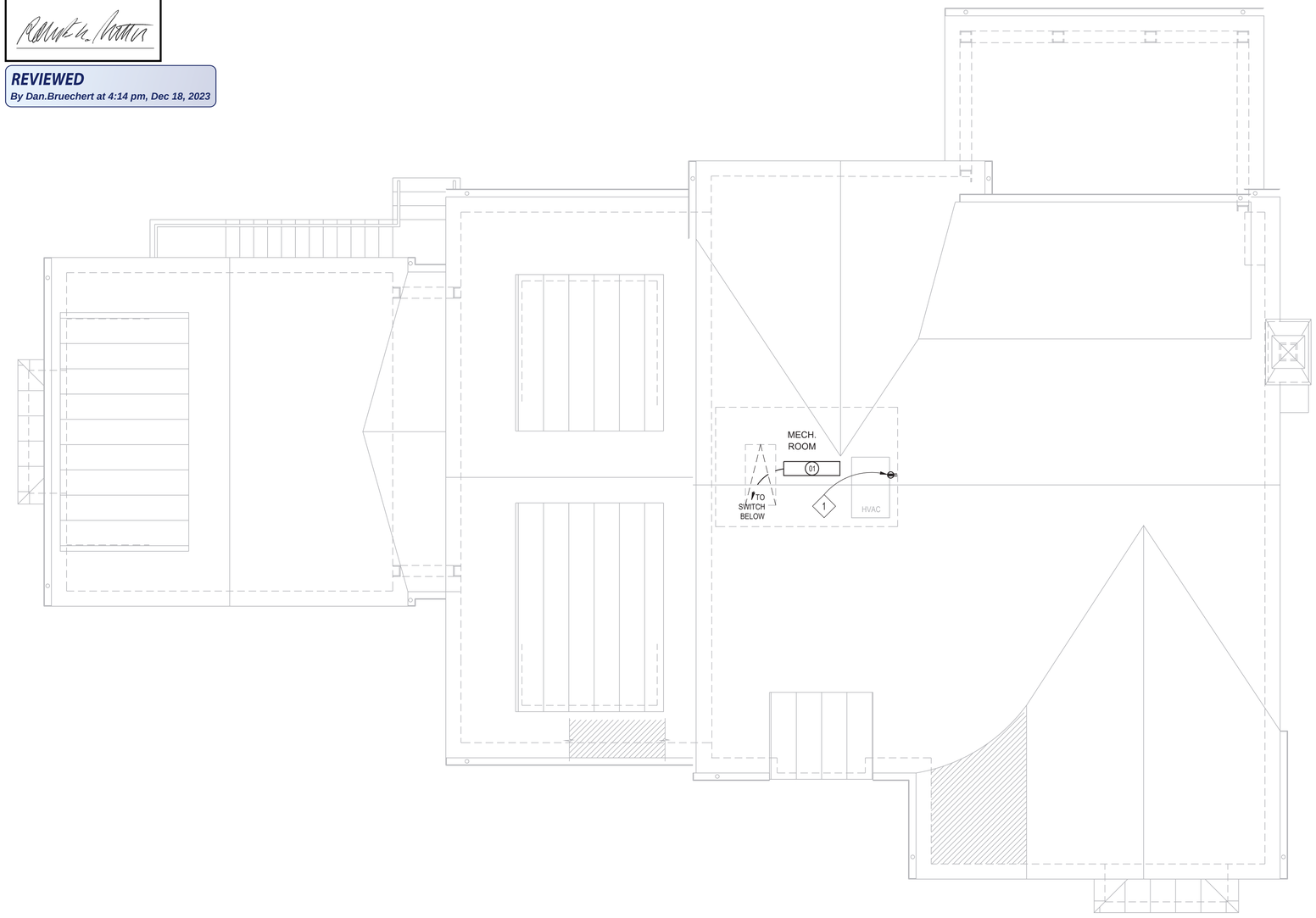

1 ATTIC FLOOR ELECTRICAL PLAN
SCALE: 1/4"=1'-0"

PLAN NORTH

ELECT. & LIGHTING SYMBOLS LEGEND

- CEILING FAN
- CEILING FAN W/ LIGHT KIT
- BATH EXHAUST FAN
- BATH EXHAUST FAN W/ LIGHT
- SURFACE MTD. FLUOR LIGHT FIXTURE
- RECESS MTD. LIGHT FIXTURE
- RECESS MTD. LIGHT FIXTURE, DIRECTIONAL
- RECESS MTD. LIGHT FIXTURE, VAPOR PROOF
- SURFACE (OR PENDANT) MTD. LIGHT FIXTURE
- WALL MTD. LIGHT FIXTURE
- WALL MTD. FLOOD LIGHT FIXTURE W/ MOTION DETECTOR
- UNDERCABINET LIGHT FIXTURE
- HARDWIRED SMOKE DETECTOR/ CARBON MONOXIDE COMBO UNIT WITH BATTERY BACKUP PER IRC
- TELEPHONE JACK
- DATA NETWORK JACK
- COAX SIGNAL JACK
- DUPLEX OUTLET
- APPLIANCE DUPLEX OUTLET
- SWITCHED DUPLEX OUTLET
- GFI DUPLEX OUTLET
- GFI DUPLEX OUTLET (WEATHERPROOF)
- FLOOR MTD. DUPLEX OUTLET
- FLOOR MTD. SWITCHED DUPLEX OUTLET
- 220V. OUTLET
- AUDIO SYSTEM SPEAKER JACK
- SINGLE POLE SWITCH
- SPEAKER CONTROL PANEL
- 3-WAY SWITCH
- 4-WAY SWITCH
- DISCONNECT SWITCH
- ELECTRIC SERVICE PANEL
- THERMOSTAT
- DOOR CHIME

LIGHTING SCHEDULE - ATTIC FLOOR

SYMBOL TYPICAL	SYMBOL EXCEPTION	LOCATION	HOUSING/ TRIM	LAMPING/ NOTES
		ALL LOCATIONS ON THIS FLOOR, UNLESS SCHEDULED OTHERWISE	NORA LIGHTING 4 " LED, WHITE TRIM DIMMABLE 800LM	14W 2700K
VP		ALL LOCATIONS ON THIS FLOOR, UNLESS SCHEDULED OTHERWISE	NORA LIGHTING 4 " LED, WHITE TRIM DIMMABLE 800LM	14W 2700K - OUTDOOR RATED
F		ALL LOCATIONS ON THIS FLOOR, UNLESS SCHEDULED OTHERWISE	PANASONIC FV-0511VQC1 WHISPER SENSE	HVAC CONTRACTOR TO CONFIRM REQ'D. AIR VOLUME

* LIGHTS NOT SCHEDULED TO BE SELECTED BY OWNER

PLAN NOTES

1. PROVIDE DEDICATED OUTLET FOR HVAC UNIT

GENERAL ELECTRICAL NOTES

1. ELECTRICAL CONTRACTOR TO PROVIDE NEW 400 AMP SERVICE WITH PANELS.

2. ELECTRICAL CONTRACTOR SHALL SIZE AND ARRANGE ALL CIRCUITS IN ACCORDANCE WITH THE NATIONAL ELECTRIC CODE AS WELL AS ALL LOCAL CODES.

3. WALL OUTLETS THROUGHOUT FIRST FLOOR ARE TO BE MOUNTED IN BASE BOARD. ALL OTHER WALL OUTLETS TO BE MOUNTED 1'-6" ABOVE FINISHED FLOOR, UNLESS NOTED OTHERWISE.

4. WALL OUTLETS AT WAINSCOT FINISH ROOMS SHALL BE LOCATED AT BASE BOARD.

5. SWITCHES ARE TO BE MOUNTED 4'-0" ABOVE FINISHED FLOOR, UNLESS NOTED OTHERWISE.

6. MOUNTING HEIGHTS ARE TO BE VERTICAL CENTER OF THE EQUIPMENT TO THE FINISHED ELEVATION OF THE FLOOR.

7. PROVIDE ELECTRICAL OUTLET AND SWITCH PRODUCTS SIMILAR TO DECORA BY LEVITON OR APPROVED EQUAL. ALL WALLPLATES TO BE SCREWLESS. ALL WALLPLATES NOT IN BASE BOARD TO BE PAINTED TO MATCH WALL COLOR. ALL SWITCH & OUTLET STYLES ARE TO BE APPROVED BY OWNER PRIOR TO INSTALLATION.

8. PROVIDE HARDWIRED SMOKE DETECTORS PER IRC SECTION R313 & LOCAL JURISDICTION AMENDMENTS.

9. ALL INTERIOR LIGHTS (EXCEPT IN BATHROOMS) SHALL HAVE DIMMERS.

10. ALL PHONE/DATA LOCATIONS TO BE UNDER ONE COMMON FACE PLATE.

11. ELECTRICIAN TO LOCATE ALL FIXTURES, SWITCHES, OUTLETS, ETC. PRIOR TO RUNNING WIRING. OWNER, ELECTRICIAN &ARCHITECT TO MEET AT A MUTUALLY AGREED UPON TIME TO REVIEW LOCATIONS.

12. OWNER IS ALLOWED TO ADD AN ADDITIONAL TEN (10) ITEMS; SWITCHES, CABLE, PHONE OUTLET, ETC. OR ANY COMBINATION AT NO ADDITIONAL CHARGE TO THE OWNER.

13. WIRE FOR AUDIO, COORDINATE W/ OWNER.

14. ALL 15 AND 20 AMP CIRCUITS TO BE CAFI PROTECTED, AND ALL RECEPTACLES TO BE TAMPER PROOF.

15. PROVIDE ARC FAULT RECEPTACLES IN ALL BEDROOMS.

GTM ARCHITECTS

7735 OLD GEORGETOWN ROAD
SUITE 700
BETHESDA, MD 20814
(240)333-2000
(240)333-2001 FAX
WWW.GTMARCHITECTS.COM

Seal

I certify that these documents were prepared or approved by me, and that I am a duly licensed architect under the laws of the State of Maryland, license number 8000, Expiration date, 10/06/24.

Consultant

Project
3929 WASHINGTON ST
3929 WASHINGTON ST. KESINGTON, MD 20895

Owner
TOM AND MAGGIE McCULLOUGH

Developer

Issue Description	Date
PERMIT SET	09-29-2023
PERMIT SET PROGRESS SET	08-29-2023
D.D. ELECTRICAL & LIGHTING SET	08-10-2023
DESIGN DEV'T PROGRESS SET	07-24-2023

GTM Project No.	23.0187
Checked By	GTM/ RJV
Drawn By	RJV/ CCM
Scale	AS NOTED

Sheet Title
ATTIC POWER & LIGHTING PLAN

Sheet No.
E103

APPROVED
Montgomery County
Historic Preservation Commission

REVIEWED
By Dan.Bruechert at 4:14 pm, Dec 18, 2023

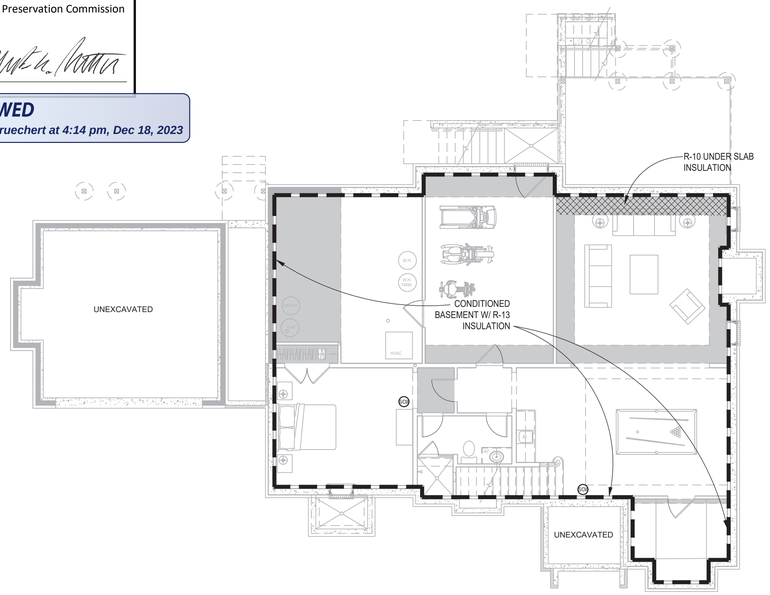

1 BASEMENT THERMAL ENVELOPE DIAGRAM
SCALE: 1/8"=1'=0

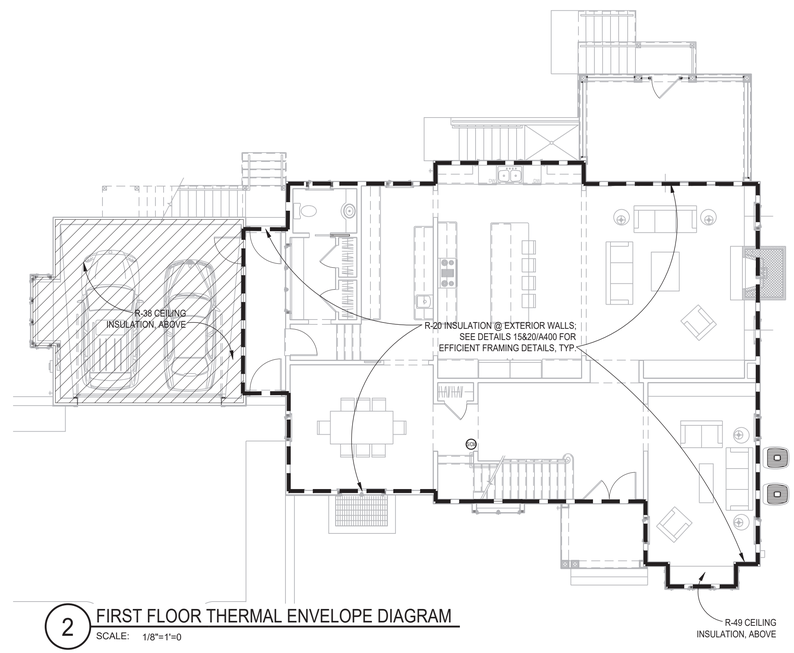

2 FIRST FLOOR THERMAL ENVELOPE DIAGRAM
SCALE: 1/8"=1'=0

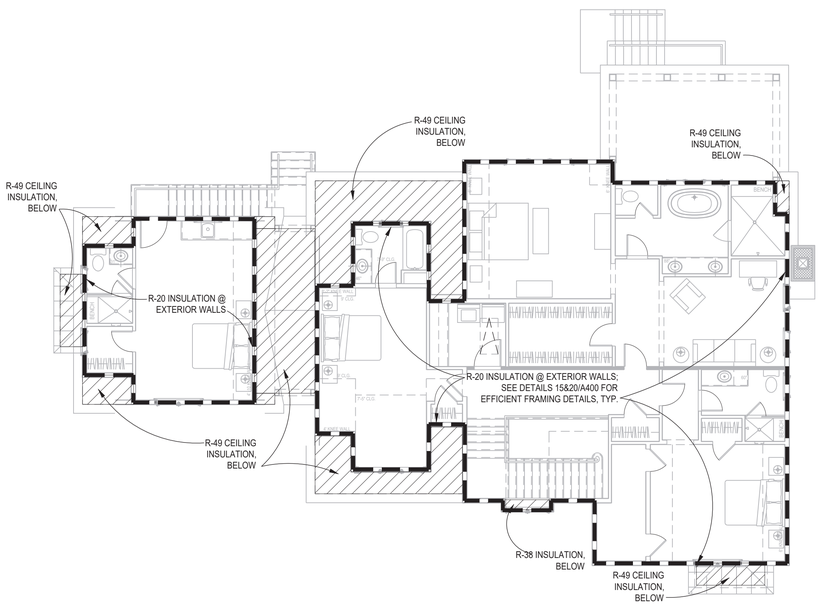

3 SECOND FLOOR THERMAL ENVELOPE DIAGRAM
SCALE: 1/8"=1'=0

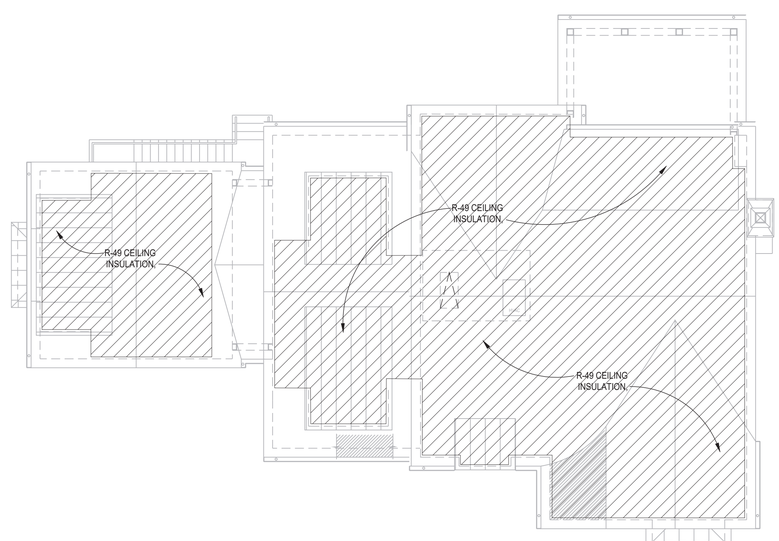

4 ATTIC FLOOR THERMAL ENVELOPE DIAGRAM
SCALE: 1/8"=1'=0

WINDOW/DOORS THERMAL DATA

THERMAL PERFORMACE DATA FOR DOORS & WINDOWS		
OPENING TYPE	U-VALUE	SHGC
WINDOWS	0.32	0.40
SKYLIGHT	0.55	0.40

U-FACTORS & SHGC OF FENESTRATION TO BE DETERMINED IN ACCORDANCE WITH THE NFRC

ENERGY CONSERVATION NOTES

1. The following provisions for thermal resistance meet or exceed the requirements stipulated by the International Energy Conservation Code.

2. INSULATION:	IRC
CEILING (OF UPPERMOST STORY)	R-49
VAULTED CEILING	R-38
EXTERIOR FRAME WALLS	R-20
RIM JOISTS	EQUAL TO WALL BELOW
FLOORS OVER UNHEATED SPACES (INCLUDING FLOOR OVERHANGS)	R-19
MASONRY WALLS (ENCLOSED HEATED LIVING AREAS)	R-13
SLAB ON GRADE (HEATED SPACE)	
24" PERIMETER INSULATION	R-10
WINDOWS	DOUBLE-GLAZED
DOORS	DOUBLE-GLAZED

*ALL VALUES ARE TYPICAL UNLESS NOTED OTHERWISE IN ARCHITECTURAL DRAWINGS

3. Air Infiltration:
A. Windows: not exceeding five tenths (0.5) CFM of sash crack.
B. Sliding Glass Doors: not exceeding five tenths (0.5) CFM per foot of door area.
C. Swinging Doors: not exceeding one and twenty-five hundredths (1.25) CFM per square foot of door area.
Provide 1" fiberglass sill sealer between foundation wall and all sill plates.
D. In order to seal between dissimilar materials to allow for differential expansion and contraction, the following shall be caulked, gasketed, weatherstripped or otherwise sealed with an air barrier material, suitable film or solid material:

1. All joints, seams, and penetrations
2. Site-built windows, doors, and skylites
3. Openings between window and door assemblies and their respective jambs & framing
4. Utility penetrations
5. Dropped ceilings or chases adjacent to the thermal envelope
6. Knee walls
7. Walls and ceilings separating a garage from conditioned spaces
8. Behind tubs and showers on exterior walls
9. Common walls between dwelling units
10. Attic access openings
11. Rim joist junction
12. Other sources of infiltration

HVAC SYSTEMS & WATER HEATING

1. HEATING & COOLING EQUIP. CONTROLS. AT LEAST ONE PRE-PROGRAMMED PROGRAMMABLE THERMOSTAT IS REQUIRED WHEN USING A FORCED AIR SYSTEM. SEPARATE THERMOSTATS ARE REQUIRED FOR EACH HEATING/COOLING ZONE IN THE DWELLING.

2. DUCT INSULATION. SUPPLY DUCTS LOCATED OUTSIDE THE BUILDING THERMAL ENVELOPE SHALL BE INSULATED TO MINIMUM R-8, ALL OTHER DUCTS INSULATED TO A MINIMUM OF R-6

3. DUCT SEALING. ALL DUCTS, AIR HANDLERS, FILTER BOXES, & BUILDING CAVITIES MUST BE SEALED. JOINTS & SEAMS SHALL COMPLY W/ M1606.4.1 IRC

4. MECHANICAL SYSTEM PIPING INSULATION. R-3 FOR PIPING CARRYING FLUIDS AT >105°F OR <55°F IS REQUIRED

5. MECHANICAL VENTILATION. OUTDOOR AIR INTAKES OR EXHAUSTS SHALL HAVE DAMPERS

6. SERVICE WATER HEATING. PIPING IN THE CIRCULATING HOT WALTER SYSTEM SHALL BE INSULATED TO AN R-3 AND SYSTEM TO INCLUDE MANUAL OR AUTOMATIC SWITCH THAT CAN TURN OFF THE SYSTEM WHEN IT IS NOT USED. WATER HEATERS WITH PIPE RISERS SHALL HAVE HEAT TRAPS ON BOTH INLET AND OUTLET OF WATER HEATER UNLESS THE WATER HEATER HAS INTEGRAL HEAT TRAPS OR IS PART OF A CIRCULATION SYSTEM. TYPICAL METHODS USED FOR CREATING HEAT TRAPS ARE "U" OR "RAMS HORN" BENDS IN THE FLEXIBLE PIPE CONNECTORS OR INSTALLING AFTERMARKET PIPE NIPPLES WITH INTEGRAL TRAPS.

7. EQUIPMENT SIZING. HEATING AND COOLING EQUIPMENT SHALL BE SIZED BASED ON BUILDING LOADS CALCULATED IN ACCORDANCE WITH ACCA (AIR CONDITIONING CONTRACTORS OF AMERICA) MANUAL-J, A SIMPLIFIED METHOD OF CALCULATING HEATING AND COOLING LOADS. THE MANUAL-J CALCULATIONS SHALL BE SUBMITTED UPON APPLICATION FOR THE MECHANICAL PERMIT.

SECTION 302.1 OF IECC SPECIFIES THE INTERIOR DESIGN TEMPERATURES USED FOR HEATING AND COOLING LOAD CALCULATIONS AS MAXIMUM OF 72°F FOR HEATING AND MINIMUM 75°F FOR COOLING.

LEGEND

- INSULATION PERIMETER
- AREA OF INSULATION ABOVE OR BELOW AS INDICATED
- AREA OF INSULATION UNDER SLAB

GTM ARCHITECTS
7735 OLD GEORGETOWN ROAD
SUITE 700
BETHESDA, MD 20814
(240)333-2000
(240)333-2001 FAX
WWW.GTMARCHITECTS.COM

Seal

I certify that these documents were prepared or approved by me, and that I am a duly licensed architect under the laws of the State of Maryland, license number 8655, Expiration date: 12/31/24.

Consultant

Project
3929 WASHINGTON ST
3929 WASHINGTON ST. KESINGTON, MD 20895

Owner
TOM AND MAGGIE McCULLOUGH

Developer

Issue Description	Date
PERMIT SET	09-29-2023
PERMIT SET PROGRESS SET	08-29-2023
D.D. ELECTRICAL & LIGHTING SET	08-10-2023
DESIGN DEV'T PROGRESS SET	07-24-2023

GTM Project No.	23.0187
Checked By	GTM/ RJV
Drawn By	RJV/ CCM
Scale	AS NOTED

Sheet Title
THERMAL ENVELOPE DIAGRAMS

Sheet No.
EC001

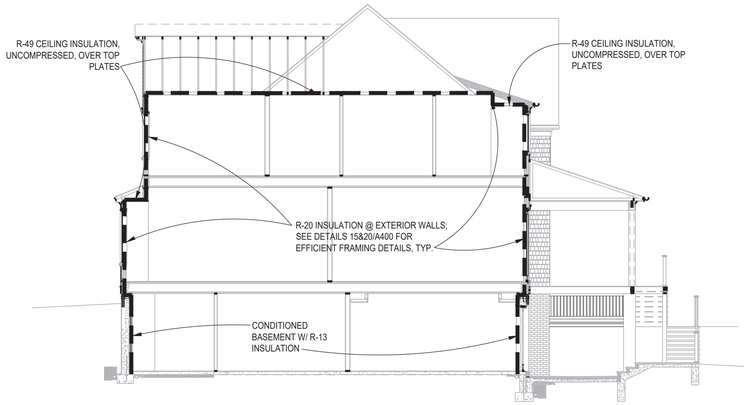

-INSTALL WALL AND CEILING INSULATION PER MANUFACTURER'S INSTRUCTIONS

-BAFFLE OVER AIR PERMEABLE INSULATION ADJACENT TO SOFFIT AND EAVE VENTS.

-ATTIC ACCESS HATCH AND DOOR INSULATION ≥ R-VALUE OF ADJACENT ASSEMBLY.

*INSTALL AIR AND THERMAL BARRIER PER MANUFACTURER'S INSTRUCTIONS

*GC TO BACK FOAM SEAL ANY PENETRATIONS MADE THROUGH THE TOP PLATE OF FRAMING, INCLUDING BUT NOT LIMITED TO: HOLES FOR WIRING & VENTING ETC...

1 TYPICAL BUILDING SECTION THERMAL DIAGRAM

SCALE: 1/8"=1'=0

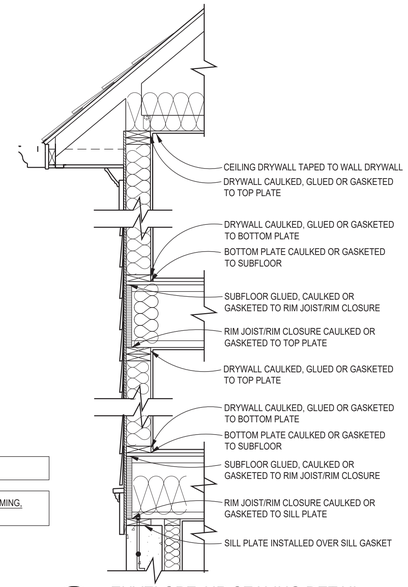

2 ENVELOPE AIR SEALING DETAIL

Scale: 3/4"=1'-0"

Generated by RES*check-Web* Software

Compliance Certificate

Project 23.0187_3929 Washington St.

Energy Code: **2018 IECC**
Location: **Kensington (Montgomery), Maryland**
Construction Type: **Single-family**
Project Type: **New Construction**
Conditioned Floor Area: **6,708 ft2**
Glazing Area **14%**
Climate Zone: **4 (5093 HDD)**
Permit Date:
Permit Number:

Construction Site:
3929 Washington St.
Kensington, MD 20895

Owner/Agent:
Thomas McCullough
McCullough Residential, LLC
5513 Connecticut Ave. NW
Suite 200
Washington, DC 20015
(202) 237-2415 ext.10
Tom@mccullough-construction.com

Designer/Contractor:
Rolando Valdez
GTM Architects, Inc
7735 Old Georgetown Rd
Suite 700
Bethesda, MD 20814
240-333-2025
rvaldez@gtmarchitects.com

Compliance: Passes using UA trade-off

Compliance: **8.8% Better Than Code** Maximum UA: **693** Your UA: **632** Maximum SHGC: **0.40** Your SHGC: **0.17**

The % Better or Worse Than Code Index reflects how close to compliance the house is based on code trade-off rules.
It DOES NOT provide an estimate of energy use or cost relative to a minimum-code home.

Slab-on-grade tradeoffs are no longer considered in the UA or performance compliance path in REScheck. Each slab-on-grade assembly in the specified climate zone must meet the minimum energy code insulation R-value and depth requirements.

Envelope Assemblies

Assembly	Gross Area or Perimeter	Cavity R-Value	Cont. R-Value	Prop. U-Factor	Req. U-Factor	Prop. UA	Req. UA
Ceiling: Flat Ceiling or Scissor Truss	2,510	49.0	0.0	0.026	0.026	65	65
Wall: Wood Frame, 16" o.c.	5,397	21.0	0.0	0.057	0.060	265	279
Door 1: Glass Door (over 50% glazing) SHGC: 0.15	266			0.300	0.320	80	85
Window: Wood Frame SHGC: 0.18	485			0.250	0.320	121	155
Basement: Solid Concrete or Masonry Wall height: 8.7' Depth below grade: 7.4' Insulation depth: 8.6'	1,844	15.0	0.0	0.055	0.059	101	109

Project Title: 23.0187_3929 Washington St. Report date: 08/14/23
Data filename: Page 1 of 2

2018 IECC Energy Efficiency Certificate

Insulation Rating	R-Value
Above-Grade Wall	21.00
Below-Grade Wall	15.00
Floor	0.00
Ceiling / Roof	49.00
Ductwork (unconditioned spaces):	_____

Glass & Door Rating	U-Factor	SHGC
Window	0.25	0.18
Door	0.30	0.15

Heating & Cooling Equipment	Efficiency
Heating System:_____	_____
Cooling System:_____	_____
Water Heater:_____	_____

Name: _____ Date:_____
Comments

APPROVED
Montgomery County
Historic Preservation Commission

REVIEWED
By Dan.Bruechert at 4:13 pm, Dec 18, 2023

WINDOW/DOORS THERMAL DATA

THERMAL PERFORMACE DATA FOR DOORS & WINDOWS		
OPENING TYPE	U-VALUE	SHGC
WINDOWS	0.32	0.40
SKYLIGHT	0.55	0.40

U-FACTORS & SHGC OF FENESTRATION TO BE DETERMINED IN ACCORDANCE WITH THE NFRC

ENERGY CONSERVATION NOTES

1. The following provisions for thermal resistance meet or exceed the requirements stipulated by the International Energy Conservation Code.

2. INSULATION:	IRC
CEILING (OF UPPERMOST STORY)	R-49
VAULTED CEILING	R-38
EXTERIOR FRAME WALLS	R-20
RIM JOISTS	EQUAL TO WALL BELOW
FLOORS OVER UNHEATED SPACES (INCLUDING FLOOR OVERHANGS)	R-19
MASONRY WALLS (ENCLOSED HEATED LIVING AREAS)	R-13
SLAB ON GRADE (HEATED SPACE) 24" PERIMETER INSULATION	R-10
WINDOWS	DOUBLE-GLAZED
DOORS	DOUBLE-GLAZED

*ALL VALUES ARE TYPICAL UNLESS NOTED OTHERWISE IN ARCHITECTURAL DRAWINGS

3. Air Infiltration:
A. Windows: not exceeding five tenths (0.5) CFM of sash crack.
B. Sliding Glass Doors: not exceeding five tenths (0.5) CFM per foot of door area.
C. Swinging Doors: not exceeding one and twenty-five hundredths (1.25) CFM per square foot of door area.
Provide 1" fiberglass sill sealer between foundation wall and all sill plates.
D. In order to seal between dissimilar materials to allow for differential expansion and contraction, the following shall be caulked, gasketed, weatherstripped or otherwise sealed with an air barrier material, suitable film or solid material:

1. All joints, seams, and penetrations
2. Site-built windows, doors, and skylites
3. Openings between window and door assemblies and their respective jambs & framing
4. Utility penetrations
5. Dropped ceilings or chases adjacent to the thermal envelope
6. Knee walls
7. Walls and ceilings separating a garage from conditioned spaces
8. Behind tubs and showers on exterior walls
9. Common walls between dwelling units
10. Attic access openings
11. Rim joist junction
12. Other sources of infiltration

HVAC SYSTEMS & WATER HEATING

1. HEATING & COOLING EQUIP. CONTROLS. AT LEAST ONE PRE-PROGRAMMED PROGRAMMABLE THERMOSTAT IS REQUIRED WHEN USING A FORCED AIR SYSTEM. SEPARATE THERMOSTATS ARE REQUIRED FOR EACH HEATING/COOLING ZONE IN THE DWELLING.

2. DUCT INSULATION. SUPPLY DUCTS LOCATED OUTSIDE THE BUILDING THERMAL ENVELOPE SHALL BE INSULATED TO MINIMUM R-8, ALL OTHER DUCTS INSULATED TO A MINIMUM OF R-6

3. DUCT SEALING. ALL DUCTS, AIR HANDLERS, FILTER BOXES, & BUILDING CAVITIES MUST BE SEALED. JOINTS & SEAMS SHALL COMPLY W/ M1606.4.1 IRC

4. MECHANICAL SYSTEM PIPING INSULATION. R-3 FOR PIPING CARRYING FLUIDS AT >105°F OR <55°F IS REQUIRED

5. MECHANICAL VENTILATION. OUTDOOR AIR INTAKES OR EXHAUSTS SHALL HAVE DAMPERS

6. SERVICE WATER HEATING. PIPING IN THE CIRCULATING HOT WALTER SYSTEM SHALL BE INSULATED TO AN R-3 AND SYSTEM TO INCLUDE MANUAL OR AUTOMATIC SWITCH THAT CAN TURN OFF THE SYSTEM WHEN IT IS NOT USED. WATER HEATERS WITH PIPE RISERS SHALL HAVE HEAT TRAPS ON BOTH INLET AND OUTLET OF WATER HEATER UNLESS THE WATER HEATER HAS INTEGRAL HEAT TRAPS OR IS PART OF A CIRCULATION SYSTEM. TYPICAL METHODS USED FOR CREATING HEAT TRAPS ARE "U" OR "RAMS HORN" BENDS IN THE FLEXIBLE PIPE CONNECTORS OR INSTALLING AFTERMARKET PIPE NIPPLES WITH INTEGRAL TRAPS.

7. EQUIPMENT SIZING. HEATING AND COOLING EQUIPMENT SHALL BE SIZED BASED ON BUILDING LOADS CALCULATED IN ACCORDANCE WITH ACCA (AIR CONDITIONING CONTRACTORS OF AMERICA) MANUAL-J, A SIMPLIFIED METHOD OF CALCULATING HEATING AND COOLING LOADS. THE MANUAL-J CALCULATIONS SHALL BE SUBMITTED UPON APPLICATION FOR THE MECHANICAL PERMIT.

SECTION 302.1 OF IECC SPECIFIES THE INTERIOR DESIGN TEMPERATURES USED FOR HEATING AND COOLING LOAD CALCULATIONS AS MAXIMUM OF 72°F FOR HEATING AND MINIMUM 75°F FOR COOLING.

LEGEND

INSULATION PERIMETER

AREA OF INSULATION ABOVE OR BELOW AS INDICATED

AREA OF INSULATION UNDER SLAB

GTM ARCHITECTS

7735 OLD GEORGETOWN ROAD
SUITE 700
BETHESDA, MD 20814
(240)333-2000
(240)333-2001 FAX
WWW.GTMARCHITECTS.COM

GTM

Seal

STATE OF MARYLAND ROLANDO VALDEZ 32243 ARCHITECT

I certify that these documents were prepared or approved by me, and that I am a duly licensed architect under the laws of the State of Maryland, license number 32243, Expiration Date: 12/31/24.

Consultant

Project

3929 WASHINGTON ST

3929 WASHINGTON ST. KESINGTON, MD 20895

Owner

TOM AND MAGGIE McCULLOUGH

Developer

PERMIT SET	09-29-2023
PERMIT SET PROGRESS SET	08-29-2023
D.D. ELECTRICAL & LIGHTING SET	08-10-2023
DESIGN DEV'T PROGRESS SET	07-24-2023
Issue Description	*Date*

GTM Project No.	23.0187
Checked By	GTM/ RJV
Drawn By	RJV/ CCM
Scale	AS NOTED

Sheet Title

THERMAL ENVELOPE/ RESCHECK

Sheet No.

EC002

STANDARDS AND CODES:

- DESIGN BUILDING CODE: INTERNATIONAL RESIDENTIAL CODE 2018 EDITION, STATE OR LOCAL JURISDICTION AMENDMENTS AND/OR ORDINANCES.
- IN ADDITION TO THE REQUIREMENTS INCLUDED IN THESE PROJECT, ALL CONSTRUCTION AND MATERIAL SHALL FURTHER CONFORM TO THE APPLICABLE PROVISIONS FROM LATEST EDITION OF FOLLOWING STANDARDS/CODES AS REQUIRED BY GOVERNING CODE OR LOCAL JURISDICTION.
- ACI (AMERICAN CONCRETE INSTITUTE)-318: BUILDING CODE REQUIREMENTS FOR STRUCTURAL CONCRETE..
- ACI-332: CODE REQUIREMENTS FOR RESIDENTIAL CONCRETE CONSTRUCTION
- ACI-530: BUILDING CODE REQUIREMENTS FOR MASONRY STRUCTURES
- AISC (AMERICAN INSTITUTE OF STEEL CONSTRUCTION): STEEL CONSTRUCTION MANUAL.
- NDS: NATIONAL DESIGN SPECIFICATIONS (NOS) FOR WOOD CONSTRUCTOIN WITH SUPPLEMENT.
- WFCM: WOOD FRAME CONSTRUCTION MANUAL FOR ONE- AND TWO- FAMILY DWELLINGS.
- AFPA: AMERICAN FOREST AND PAPER ASSOCIATOIN - SPAN TABLE FOR JOISTS AND RAFTERS.
- AISI S100: NORTH AMERICAN SPECIFICATION FOR THE DESIGN OF COLD FORMED STEEL STRUCTURAL MEMBERS.
- AISI S230: STANDARD FOR COLD-FORMED STEEL FRAMING-PRESCRIPTIVE METHOD FOR ONE- AND TWO-FAMILY DWELLINGS.
- AMERICAN INSTITUTE OF TIMBER CONSTRUCTION (AITC).
- AMERICAN NATIONAL STANDARDS INSTITUTE (ANSI).
- APA (AMERICAN PLYWOOD ASSOCIATION) E30: ENGINEERED WOOD CONSTRUCTION GUIDE
- ASCE - 5 (AMERICAN SOCIETY OF CIVIL ENGINEERS): BUILDING CODE REQUIREMENTS FOR MASONRY STRUCTURES.
- ASCE-6: SPECIFICATIONS FOR MASONRY STRUCTURES.
- ASCE-7: MINIMUM DESIGN LOADS FOR BUILDING AND OTHER STRUCTURES.
- AMERICAN WOOD COUNCIL (AWC).
- AMERICAN SOCIETY FOR TESTING AND MATERIALS (ASTM).
- AMERICAN WOOD PROTECTION ASSOCIATION (AWPA).
- AMERICAN WELDING SOCIETY (AWS).
- FEDERAL EMERGENCY MANAGEMENT AGENCY (FEMA).
- GYPSUM ASSOCIATION (GA).
- NATIONAL CONCRETE MASONRY ASSOCIATION (NCMA).
- SSPC: STEEL STRUCTURES PAINTING COUNCIL.
- TPI-I: NATOINAL DESIGN STANDARDS FOR METAL-PLATE-CONNECTED WOOD TRUSS CONSTRUCTION.

DESIGN LOADS:

DESCRIPTION	DEAD LOAD	LIVE LOAD	SNOW LOAD (b)
ROOF	17 PSF	-	30 PSF
FLOOR	15 PSF	40 PSF	-
ATTIC W/OUT STORAGE	10 PSF	10 PSF	-
ATTIC W/ LIMITED STORAGE	10 PSF	20 PSF	-
HABITABLE ATTICS & ATTICS W/ FIXED STAIR	10 PSF	30 PSF	-
SLEEPING ROOMS	10 PSF	30 PSF	-
BALCONIES & DECKS	10 PSF	40 PSF	-
STAIRS	10 PSF	40 PSF	-
GUARD RAILS & HAND RAILS	-	200 LBS (c)	-

WIND LOAD:

- WIND SPEED (ULTIMATE): 115 MPH
- WIND PRESSURE: 18 PSF (f)
- WIND EXPOSURE CATEGORY: B

FOUNDATION DESIGN LOADS:

- SOIL BEARING CAPACITY (g): 2000 PSF
- LATERAL EARTH PRESSURE: 60 PSF/FT

EARTHQUAKE LOADS:

- SEISMIC DESIGN CATEGORY: B
- SITE CLASS: B

NOTES:

a. REFER TO IRC TABLE R301.5 FOR MORE INFORMATION.
b. SNOW LOAD SPECIFIED IS GROUND SNOW LOAD ONLY.
c. A SINGLE CONCENTRATED LOAD APPLIED IN ANY DIRECTION AT ANY POINT ALONG THE TOP.
d. MECHANICAL EQUIPMENT LOADS IN EXCESS OF 200 LBS SHALL BE NOTIFIED TO STRUCTURAL ENGINEER.
e. PRE-FABRICATED STRUCTURAL COMPONENT SHALL COMPLY WITH DESIGN LOADS FROM APPLICABLE CODES/STANDARDS IN ADDITION TO LOADS SPECIFIED IN THESE NOTES.
f. WIND PRESSURE SPECIFIED IS FOR MAIN WIND FORCE RESISTING SYSTEM ONLY. WIND PRESSURE & LOADS FOR STRUCTURAL COMPONENTS AND CLADDING SHALL BE DETERMINED BY RESPECTIVE REGISTERED DESIGN PROFESSIONAL PER APPLICABLE STANDARDS/CODES.
g. SOIL BEARING CAPACITY IS ASSUMED UNLESS GEOTECHNICAL REPORT IS PROVIDED PER SITE WORK SECTION.

DEFLECTION CRITERIA:

DESCRIPTION	TOTAL LOAD	LIVE LOAD
ROOF TRUSSES/RAFTERS/CEILING JOISTS	L/240	L/360 OR 1/2" MAX.
FLOOR JOISTS/FLOOR TRUSSES	L/240	L/480 OR 1/2" MAX.
MEMBERS SUPPORTING BRICK/ HORIZONTAL MASONRY MEMBERS	L/600 OR 0.3" MAX.	
JOISTS/TRUSSES SUPPORTING CERAMIC TILE	L/720	

SITE WORK:

- GEOTECHNICAL REPORT WAS NOT PROVIDED AND FOUNDATION DESIGN IS BASED ON ASSUMED SOIL DESIGN CRITERIA AND SHALL BE FIELD VERIFIED.
- BOTTOM OF ALL EXTERIOR FOOTING SHALL BE MINIMUM FROST DEPTH OF 30 INCHES BELOW GRADE OR AS REQUIRED BY GOVERNING AUTHORITY OR CODE, AND SHALL PROJECT 12" IN TO UNDISTURBED VIRGIN SOIL OR ENGINEERED FILL.
- SOIL BEARING CAPACITY SHALL BE VERIFIED ON-SITE BY GEOTECHNICAL ENGINEER.
- ALL BEARING STRATA SHALL BE ADEQUATELY DRAINED PRIOR TO PLACING FOUNDATION CONCRETE.
- THE SIDES OF FOOTINGS MAY BE EARTH-FORMED IF THE EXCAVATION CAN BE KEPT VERTICAL CLEAN AND STABLE. OTHERWISE FORMS MUST BE USED.
- UNBRACED EXCAVATIONS SHALL BE SLOPED NO GRATER THAN 2:1.
- NO EXCAVATION SHALL BE CLOSER THAN ATLEAST A SLOPE OF 2:1 TO THE UNDERSIDE OF ANY EXISTING OR NEW FOOTING WITHOUT THE WRITTEN AND CERTIFIED PERMISSION FROM GEOTECHNICAL ENGINEER.
- STEP FOOTINGS SHALL BE PROVIDED WITH A RATIO OF 2:1.
- FOUNDATION ELEMENTS THAT ARE TO SUPPORT FILL ON BOTH SIDES SHALL BE BACKFILLED SIMULTANEOUSLY AND UNIFORMLY ON BOTH SIDES.
- FOUNDATION ELEMENTS THAT ARE TO SUPPORT FILL ON ONE SIDE ONLY SHALL BE PROPERLY BRACED BY PERMANENT STRUCTURAL ELEMENTS PRIOR TO BACKFILLING. PROVIDE TEMPORARY BRACING AS REQUIRED UNTIL PERMANENT BRACING IN PLACE AND FOUNDATION WALL ACHIEVES DESIRED STRENGTH.
- ENGINEERED FILLS HALL BE PLACED IN 8" MAXIMUM HEIGHT LOOSE LIFTS AND COMPACTED TO 95% OF MAXIMUM DRY DENSITY AT OPTIMUM MOISTURE CONTENT AS ESTABLISHED BY ASTM D-698.
- NO PORTION OF THE STRUCTURAL DRAWINGS SHALL BE USED AS SHOP DRAWINGS. CONTRACTOR IS RESPONSIBLE FOR FURNISHING SHOP DRAWINGS AND SHALL SUBMIT TO ENGINEER OF RECORD FOR REVIEW.
- PROVIDE SHORING AND PROTECTION FOR EXCAVATION BANKS AS NECESSARY TO AVOID CAVING
- PROVIDE 6 MIL POLYETHYLENE VAPOR VARIOUS UNDER SLAB ON GRADE OR AS RECOMMENDED BY GEOTECHNICAL ENGINEER.
- ALL RECOMMENDATIONS SPECIFIED IN GEOTECHNICAL REPORT SHALL BE FOLLOWED ALL THE TIME AND SHALL GOVERN.

APPROVED

Montgomery County

Historic Preservation Commission

REVIEWED

By Dan.Bruechert at 4:21 pm, Dec 18, 2023

GENERAL

- STRUCTURAL ENGINEERING DRAWINGS PREPARED IN THIS SET ARE BASED ON ARCHITECTURAL DRAWINGS AND PROVIDED INFORMATION AND SHALL BE READ IN CONJUNCTION WITH ARCHITECTURAL DRAWINGS.
- DETAILS, SECTIONS AND NOTES SHOWN ON THESE DRAWINGS ARE INTENDED TO BE TYPICAL AND SHALL BE APPLY TO SIMILAR CONDITIONS ELSEWHERE OTHERWISE SHOWN OR NOTED.
- THE STRUCTURAL INTEGRITY OF THE BUILDING IS DEPENDENT UPON COMPLETION OF WORK ACCORDING TO CONTRACT DRAWINGS AND SPECIFICATIONS. THE STRUCTURAL ENGINEER ASSUMES NO LIABILITY FOR THE STRUCTURE DURING CONSTRUCTION. THE METHODS OF CONSTRUCTION AND SEQUENCE OF OPERATIONS IS THE SOLE RESPONSIBILITY OF OWNER/CONTRACTOR.
- TEMPORARY BRACING AND SHORING SHALL BE RESPONSIBILITY OF CONTRACTOR AND SHALL BE DESIGNED BY SPECIALITY ENGINEER PER APPLICABLE CODES/STANDARDS TO ENSURE VERTICAL AND LATERAL STABILITY OF THE STRUCTURE OR PORTION THEREOF DURING THE CONSTRUCTION.
- THE CONTRACTOR SHALL BE RESPONSIBLE FOR PROVIDING NECESSARY UNDERPINNING OR BRACING FOR EXISTING STRUCTURE OR PORTION THEREOF. STRUCTURAL ENGINEER IS NOT RESPONSIBLE FOR ANY DESIGN OR PROVISIONS OF ANY TEMPORARY STRUCTURES.
- DO NOT CHANGE SIZE OR DIMENSIONS OF STRUCTURAL ELEMENTS WITHOUT WRITTEN PERMISSION FROM STRUCTURAL ENGINEER.
- DO NOT SCALE THE DRAWINGS, USE DIMENSIONS SHOWN. COORDINATE AND VERIFY ALL DIMENSIONS WITH ARCHITECTURAL DRAWINGS. ARCHITECTURAL DRAWINGS SUPERCEDES ALL DIMENSIONS SHOWN IN THESE DRAWINGS.
- GENERAL CONTRACTOR IS RESPONSIBLE TO PERFORM ALL NECESSARY TESTINGS PER GOVERNING ASTM STANDARDS FOR SOIL, CONCRETE OR ANY OTHER MATERIALS INVOLVED IN THE PROJECT AND SHOP DRAWINGS OF SUCH DESIGN OR REPORTS OF TESTING SHALL BE SUBMITTED TO ARCHITECT/ENGINEER FOR RECORD AND APPROVAL. ALL SUCH DESIGN OR TEST RESULTS SHALL BE SIGNED AND SEALED BY LICENSED PROFESSIONAL IN STATE OR JURISDICTION WHERE THE PROJECT IS LOCATED.

CAST-IN-PLACE CONCRETE:

- CONCRETE DESIGN AND DETAILING SHALL CONFORM TO THE REQUIREMENTS OF ACI 318 AND ACI 301, LATEST EDITIONS. CONTRACTOR SHALL SUBMIT MIX DESIGNS ACCOMPANIED BY APPROPRIATE GRAPHS AND BACKGROUND DATA FOR APPROVAL. MIX DESIGN SHALL INDICATE 7 AND 28 DAYS STRENGTHS, CEMENT CONTENT, AIR CONTENT, WATER-CEMENT RATIO, AMOUNT OF FINE AND COARSE AGGREGATES, AND ADMIXTURES.
- ALL REINFORCING STEEL SHALL BE DEFORMED BILLET STEEL CONFORMING TO ASTM A615 GRADE 60 AND DETAILED, FABRICATED AND PLACED CONFORMING TO MANUAL OF STANDARD PRACTICE FOR DETAILING CONCRETE STRUCTURES (ACI 315)
- ALL WELDED WIRE FABRIC SHALL CONFORM TO ASTM A185. ALL MESH EDGES SHALL LAP A MIN. OF 2 SQUARES.
- CONCRETE COMPRESSIVE STRENGTHS AT 28 DAYS SHALL BE 3000 psi FOR FOOTINGS, FOUNDATION WALLS AND SLAB ON GRADE IN ENCLOSED SPACES & 3500 psi FOR HORIZONTAL SURFACES EXPOSED TO WEATHER.
- SLUMP AT THE POINT OF DISCHARGE IN TO THE FORMS SHALL BE 4" +/- 1" FOR VERTICAL ELEMENTS AND 6" +/- 1" FOR HORIZONTAL ELEMENTS.
- CAST-IN-PLACE CONCRETE SHALL BE READY-MIX PER ASTM C94.
- ALL CONCRETE EXPOSED TO WEATHER SHALL HAVE A MIN. AIR ENTRAINMENT OF 6% +/- 1% PER ACI 318-08; SECTION: 4.4.1.
- PROVIDE CORNER BARS AT ALL WALL AND FOOTING INTERSECTIONS AND MATCH CONTINUING REINFORCEMENT.
- SEE ARCHITECTURAL DRAWINGS FOR NECESSARY CONCRETE FINISHES.
- RESTRICT ADDITION OF MIX WATER AT THE JOB SITE. DO NOT ADD WATER WITHOUT APPROVAL OF THE INSPECTIONS ENGINEER AND DO NOT EXCEED SLUMP LIMITATIONS.
- ALL GROUTS SHALL BE PRE-MIXED NON-SHRINKABLE, NON-METALLIC FORMULA PRO CONFORMING TO ASTMC827, AND SHALL HAVE A SPECIFIED COMPRESSIVE STRENGTH OF 3000 psi WITHIN 24 HOURS AND 6000 psi AT 28 DAYS. PRE-GROUTING OF BASE PLATES WILL NOT BE PERMITTED.
- PROVIDE KEYED JOINTS BETWEEN ALL NON-MONOLITHIC INTERSECTING CONCRETE ELEMENTS AND JOINTS.
- CONTRACTOR SHALL VERIFY EMBEDDED ITEMS, INCLUDING BUT NOT LIMITED TO ANCHOR BOLTS, BOLT CLUSTERS, WELD PLATES etc. BEFORE PLACING CONCRETE. NOTIFY ENGINEER OF ANY CONFLICTS WITH REBAR.
- CONCRETE EXPOSED TO WEATHER SHALL BE AIR ENTRAINED. TOTAL AIR CONTENT (BY PERCENT OF CONCRETE VOLUME) SHALL BE NOT LESS THAN 5% OR MORE THAN 7%.
- GENERAL CONTRACTOR IS RESPONSIBLE FOR SUBMITTING SHOP DRAWINGS SIGNED AND SEALED BY REGISTERED DESIGN PROFESSIONAL THAT INCLUDES: 1. CONCRETE MIX DESIGN 2. DETAILED REINFORCEMENT SHOP DRAWINGS PER ACI 318 AND ACI DETAILING MANUAL. 3. FORM WORK, SHORING, RE-SHORING OR UNDERPINNING SHOP DRAWINGS AS REQUIRED FOR PROJECT.

REINFORCING STEEL:

- REINFORCING BARS SHALL BE DEFORMED BILLET STEEL CONFORMING TO ASTM A615. REINFORCING BARS SHALL BE GRADE 60, UNLESS NOTED OTHERWISE.
- PLAIN BARS FOR SPIRAL REINFORCEMENT SHALL CONFORM TO ASTM A 615, GRADE 60.
- PLAIN STEEL WELDED WIRE REINFORCEMENT SHALL CONFORM TO ASTM A185.
- WELDED DEFORMED STEEL BAR MATS FOR CONCRETE REINFORCEMENT SHALL CONFORM TO ASTM A184.
- BARS SHALL BE BRANDED BY THE MANUFACTURER WITH BAR SIZE AND GRADE OF STEEL AND CERTIFIED MILL REPORTS SHALL BE SUBMITTED FOR RECORD.
- REINFORCING STEEL SHALL BE DETAILED IN ACCORDANCE WITH THE ACI "MANUAL OF STANDARD PRACTICE FOR DETAILING REINFORCED CONCRETE STRUCTURES", LATEST EDITION.
- PROVIDE MINIMUM CLEAR CONCRETE COVER (a) FOR REINFORCEMENT AS SPECIFIED BELOW UNLESS SPECIFICALLY NOTED OTHERWISE ON THE PLANS:

DESCRIPTION			MIN. COVER (IN.)
CONCRETE CAST AGAINST AND PERMENANTLY EXPOSED TO EARTH			3"
CONCRETE EXPOSED TO EARTH OR WEATHER	#6 THROUGH #18 BARS		2"
	#5 BAR, W31 OR D31 WIRE AND SMALLER		1 1/2"
CONCRETE NOT EXPOSED TO EARTH OR WEATHER	SLAB, WALLS, JOISTS		3/4"
	BEAMS, COLUMNS (PRIMARY REINF., TIES, STIRRUPS, SPIRALS.		1 1/2"
	SHELLS, FOLDED PLATES	#6 BARS AND LARGER	3/4"
		#5 BAR, W31 OR D31 WIRE, AND SMALLER	1/2"

MASONRY:

- CONCRETE BLOCKS USED IN WALLS SHALL CONFORM TO ASTM C90. BRICK SHALL CONFORM TO ASTM C62 AND ASTM C216, AS APPLICABLE. MORTAR FOR BRICK VENEER AND OTHER MASONRY SHALL CONFORM TO ASTM C270, TYPE N. TYPE S MORTAR SHALL BE USED TYPICALL FOR ALL MASONRY, AND TYPE M MORTAR SHALL BE USED FOR BELOW GRADE MASONRY AND/OR MASONRY IN CONTACT WITH SOIL, U.N.O.
- HOLLOW LOAD BEARING UNITS SHALL CONFORM TO ASTM C90, NORMAL WEIGHT TYPE II WITH A MIN. NET COMPRESSIVE UNIT STRENGTH OF 1900 psi. (NET AREA COMPRESSIVE MASONRY STRENGTH fm' = 1500 psi)
- REINFORCED MASONRY WALLS SHALL BE BUILT SUCH THAT CELLS LINE UP VERTICALLY.
- FILLED CELLS SHALL BE FILLED WITH COARSE GROUT. COARSE GROUT SHALL CONFORM TO ASTM C476. PROPERTIES SHALL INCLUDE: 2500 psi AT 28 DAYS, 3/8" MAXIMUM AGGREGATE AND 8"-11" SLUMP. FILLED CELLS MAY ALTERNATIVELY BE FILLED WITH A 3000 psi PEA GRAVEL MIX CONCRETE. TEH PEA GRAVEL MIX SHALL BE PROPORTIONED WITH A MAXIMUM AGGREGATE SIZE OF 3/8" DIAMETER TO PROVIDE A MIN. OF 1/2" CLEARANCE, ADDITIONALLY, THE PEA GRAVEL MIX SHALL PROVIDE AN 8" TO 11" SLUMP.
- A CONTINUOUS REINFORCED CMU/CONCRETE BOND BEAM SHALL BE PROVIDED ON TOP OF EACH WALL. BOND BEAMS SHALL BE MIN. 8"x8" WITH CONTINUOUS (2) #4 REBARS.
- WHERE EXPANSION OR ANY OTHER ANCHORS ARE SHOWN, MASONRY CELLS SHALL BE FULLY GROUTED AT MINIMUM OF 8" ABOVE AND BELOW EACH EXPANSION ANCHOR OR ANY OTHER ANCHORS UNLESS NOTED OTHERWISE.
- UNLESS NOTED OTHERWISE ON PLANS, PROVIDE A MIN. OF (2) FULLY GROUTED COURSES BY 32" LENGTH AT ALL STRUCTURAL STEEL BEARING.
- VERTICAL REINFORCING BARS SHALL BE HELD IN POSITION WITH BAR POSITIONERS @ 8'-0" O.C., AT TOP AND BOTTOM OF BAR WITH MIN. CLEARANCE OF 1/2" FROM MASONRY. THE CLEAR DISTANCE BETWEEN BARS SHALL NOT BE LESS THAN ONE BAR DIAMETER NOR LESS THAN 1". CENTER BARS IN WALLS UNLESS NOTED OTHERWISE.
- REINFORCING BARS SHALL BE STRAIGHT EXCEPT FOR BENDS AROUND CORNERS.
- MIN. LAP SPLICE SHALL BE 36 BAR DIAMETERS. WIRE TIE LAP SPLICES.
- WHEN A FOUNDATION DOWEL DOESN'T LINE UP WITH A VERTICAL CORE. IT SHALL NOT BE SLOPED MORE THAN 1:6. DOWELS SHALL BE GROUTED IN TO A CORE IN VERTICAL ALIGNMENT, EVEN IF IT IS IN A CELL ADJACENT TO VERTICAL WALL REINFORCEMENT.
- HORIZONTAL WALL REINFORCING SHALL BE ZINC COATED COLD DRAWN TRUSS TYPE DUR-O-WALL (OR EQUIVALENT) CONFORMING TO ASTM A82 SPACED AT 16' O.C. MAX. HORIZONTAL JOINT REINFORCING SHALL CONSIST OF (2) 9 GA OR LARGER HORIZONTAL BARS WELD CONNECTED WITH 12 GA OR LARGER CROSS-WIRES. ZINC COATING CONFORM TO ASTM A116-73. LAP SPLICE JOINT REINFORCEMENT 12-INCHES MIN.
- PROVIDE HORIZONTAL JOINT REINFORCEMENT AT MASONRY OPENINGS SUCH AS DOORS AND WINDOWS. CONTINUE JOINT REINFORCING FOR THE FIRST AND SECOND BLOCK COURSE ABOVE AND BELOW MASONRY OPENING. EXTEND JOINT REINFORCING A MIN. OF TWO FEET BEYOND OPENINGS.
- CLEANOUTS SHALL BE PROVIDED IN THE BOTTOM COURSE OF MASNORY IN EACH GROUT POUR WHEN THE POUR HEIGHT EXCEEDS 5'. CLEANOUTS SHALL BE SAW-CUT 4" x 4".
- GROUT POUR HEIGHT SHALL NOT EXCEED 24'. PLACE GROUT IN 5' MAX. LIFTS HEIGHTS.
- CONSOLIDATE GROUT POURS AT THE TIME OF PLACEMENT BY MECHANICAL MEANS AND RECONSOLIDATE AFTER INITIAL WATER LOSS AND SETTLEMENT.
- STORE BLOCKS ON PALLETS AND COVER WITH VISQUEEN.
- PLACE ALL MASONRY IN RUNNING BOND WITH 3/8" MORTAR JOINTS. PROVIDE COMPLETE COVERAGE FACE SHELL MORTAR BEDDING HORIZONTAL AND VERTICALL FULLY MORTAR WEBS IN ALL COURSES OF PIERS, COLUMNS, AND PILASTERS AND ADJACENT TO GROUT CELLS.
- MASONRY CONTROL JOINTS SHALL BE INSTALLED AT LOCATIONS INDICATED ON DRAWINGS. ADDITIONALLY INSTALL MASONRY CONTROL JOINTS SPACE AT 26'-0" O.C.

STRUCTURAL STEEL:

- STRUCTURAL STEEL SHALL CONFORM TO THE LATEST EDITION OF THE AISC "SPECIFICATION FOR THE DESIGN, FABRICATION AND ERECTION OF STRUCTURAL STEEL FOR BUILDINGS".
- ALL W SHAPE STEEL SHALL CONFORM TO ASTM 992 (Fy = 50 KSI).
- ALL HOLLOW STRUCTURAL SECTIONS (HSS) SHALL CONFORM TO ASTM A500, GRADE B.
- ALL OTHER STRUCTURAL STEEL SHALL CONFORM TO ASTM A36 (Fy = 36 KSI).
- ALL ANCHOR BOLTS SHALL CONFORM TO ASTM A307 U.N.O.
- ALL HIGH STRENGTH BOLTS SHALL CONFORM TO ASTM A325 U.N.O.
- BOLTED CONNECTIONS SHALL USE HIGH STRENGTH BOLTS.
- BOLTS IN MOMENT FRAMES SHALL USE HIGH STRENGTH SLIP CRITICAL BOLTS. SLIP CRITICAL CONNECTIONS SHALL HAVE CONTACT SURFACES MEETING CLASS A SURFACE CONDITIONS.
- WELDED CONNECTIONS SHALL CONFORM TO THE LATEST EDITION OF AMERICAN WELDING SOCIETY CODE, AWS D11.
- ALL WELDED CONNECTIONS SHALL USE E70XX, LOW HIDROGEN ELECTRODES U.N.O. ELECTRODES SHALL BE PROTECTED FROM MOISTURE.
- BOLTED CONNECTIONS SHALL CONFORM TO THE REQUIREMENTS OF "SPECIFICATIONS FOR STRUCTURAL JOINTS USING ASTM A325 OR A490 BOLTS" AS APPROVED BY RESEARCH COUNCIL ON STRUCTURAL CONNECTIONS (RCSC). USE BEARING TYPE BOLTS WITH THREAD ALLOWED ACROSS THE SHEAR PLANE.
- ALL STEEL CONNECTIONS SHALL BE WELDED AROUND WITH 1/4" FILLET WELD UNLESS OTHERWISE NOTED, EXCEPT FOR SLOTTED CONNECTIONS.
- EXPANSION BOLTS SHALL BE GALVANIZED CARBON STEEL COMPONENTS, ZINC-PLATED TO COMPLY WITH ASTM B 633 AND FF-S 325, GROUP II, TYPE 4, CLASS I.
- FULL PENETRATION WELDS SHALL BE MADE AGAINST A 1/8" x 1" BACKER PLATE TACK WELDED IN PLACE BELOW THE WELD. PENETRATION WELDS SHALL BE EQUIVALENT IN DEPTH AND LENGTH TO THE PARTS JOINED.
- SUBMIT ALL STRUCTURAL STEEL/LIGHT GAGE SHOP DRAWINGS SIGNED AND SEALED BY A REGISTERED PROFESSIONAL ENGINEER. SHOP DRAWINGS SHALL INCLUDE MEMBER SIZES, MATERIAL SPECIFICATION, CONNECTIONS AND/OR ANY OTHER ITEMS REQUIRED BY GOVERNING BUILDING CODE OR JURISDICTION.
- NO FABRICATION SHALL BE STARTED PRIOR TO SHOP DRAWINGS APPROVAL.

STRUCTURAL LUMBER:

- WOOD CONSTRUCTION, INCLUDING LUMBER, CONNECTIONS, AND DETAILS SHALL COMPLY WITH THE REQUIREMENTS OF AMERICAN INSTITUTE OF TIMBER CONSTRUCTION AND THE NATIONAL FOREST AND PAPER ASSOCIATION'S CURRENT "NATIONAL DESIGN SPECIFICATION FOR WOOD CONSTRUCTION".
- ALL STRUCTURAL WOOD MEMBERS SHALL COMPLY WITH FOLLOWING MINIMUM DESIGN VALUES:

SPECIES		Fb	Ft (a)	Fv (a)	Fc ⊥ (a)	Fc II (b)	E	Emin
HEMFIR #2		850 psi	525 psi	150 psi	405 psi	1300 psi	1300000 psi	470000 psi
SPF #2		875 psi	450 psi	135 psi	425 psi	1150 psi	1400000 psi	510000 psi
THICKNESS	WIDTH	SOUTHERN PINE #2						
2" TO 4"	2" TO 4"	1100 psi	675 psi	175 psi	565 psi	1450 psi	1400000 psi	510000 psi
	5" TO 6"	1000 psi	600 psi	175 psi	565 psi	1400 psi	1400000 psi	510000 psi
	8"	925 psi	550 psi	175 psi	565 psi	1350 psi	1400000 psi	510000 psi
	10"	800 psi	475 psi	175 psi	565 psi	1300 psi	1400000 psi	510000 psi
	12"	750 psi	450 psi	175 psi	565 psi	1250 psi	1400000 psi	510000 psi
MICROLAM LVL (ML)		2600 psi	1555 psi	285 psi	750 psi	2510 psi	1900000 psi	965710 psi
PARALLAM PSL 1.8E		2400 psi	1755 psi	190 psi	425 psi	2500 psi	1800000 psi	914880 psi
PARALLAM PSL 2.0E		2900 psi	2025 psi	290 psi	750 psi	2900 psi	2000000psi	1016535 psi
TIMBERSTRAND LSL1.3E		1900 psi	1075 psi	400 psi	680 psi	1400 psi	1300000psi	660750 psi
TIMBERSTRAND LSL1.55E		2325 psi	1070 psi	310 psi	800 psi	2050 psi	1550000psi	787815 psi

- ALL EXTERIOR WOOD MEMBERS EXPOSED TO WEATHER SHALL BE PRESSURE TREATED PER APPLICABLE CODES/STANDARDS.
- ALL FASTENERS/HARDWARE EXPOSED TO WEATHER OR IN CONTACT WITH TREATED WOOD SHALL BE HOT DIP GALVANIZED OR STAINLESS STEEL OR Z-MAX COATED OR APPROVED FOR SUCH USE BY MANUFACTURER.
- PREVENT DIRECT CONTACT OF INTERIOR WOOD WITH CONCRETE OR MASONRY. PROTECT ALL WOOD FROM MOISTURE BY APPLYING APPROVED WRAP AND AVOID DIRECT CONTACT WITH MASONRY OR CONCRETE.
- CONTRACTOR SHALL SUBMIT SHOP DRAWINGS FOR ENGINEER'S REVIEW AND APPROVAL PRIOR TO ORDERING JOISTS FOR CONSTRUCTION.
- FLOOR & ROOF FRAMING/DIRECTION SHOWN ON THE DRAWINGS ARE SCHEMATIC AND FOR REFERENCE ONLY AND SHALL NOT BE CONSIDERED AS SHOP DRAWINGS. SHOP DRAWINGS FROM MANUFACTRER SHALL BE FOLLOWED FOR JOIST/TRUSS PLACEMENTS.
- ALL MECHANICAL, PLUMBING ELECTRICAL OR ANY OTHER COMPONENTS FROM OTHER DISCIPLINES SHALL BE COORDINATED BY MANUFACTURER IN SHOP DRAWINGS AS WELL AS ON THE FIELD. NOTIFY ARCHITECT/STRUCTURAL ENGINEER IF ANY DESCRIPANCY OR CONFLICT FOUND.
- ALL STRUCTURAL FRAMING MEMBERS SUPPORTING FLOOR JOISTS/TRUSSES ARE DESIGNED BASED ON LAYOUT REPRESENTED ON DRAWINGS. ANY MODIFICATION, CHANGE OR ADDITION SHALL NOT BE DONE WITHOUT PRIOR APPROVAL BY ARCHITECT/ENGINEER. SHOP DRAWINGS SHALL BE SUBMITTED FOR REVIEW FOR ANY SUCH CHANGE.
- ROOF/FLOOR TRUSS MANUFACTURER SHALL PROVIDE NECESSARY BRACING TO WEB MEMBERS AS REQUIRED BY GOVERNING CODE/STANDARD.
- ALL ROOF SHEATHING SHALL BE APA RATED 7/16" C-C, C-D OR STRUCTURAL II WITH SPAN RATING OF 48/24 PER "AMERICAN PLYWOOD ASSOCIATION". PROVIDE MIN. NAILING PATTERN W/ 8d COMMON NAILS @ 6" O.C. ON EDGES AND 12" O.C. IN FIELD. PROVIDE PLYWOOD CLIPS AT PLYWOOD EDGES BETWEEN EACH FRAMING MEMBER.
- ALL FLOOR SHEATHING SHALL BE 3/4" THICK T&G APA RATED AND WITH SPAN RATING OF 48/24 OR STURD-I-FLOOR 24" O.C. RATED PLYWOOD SHALL BE GLUED AND NAILED. INSTALL 100% GLUE LINE AND MIN. NAILING PATTERN OF 10d COMMON NAILS @ 6" O.C. ON EDGE SUPPORTS AND 12" O.C. INTERMEDIATE SUPPORTS.
- ALL EXTERIR STUD WALL SHEATHING SHALL BE MIN. 7/16" APA RATED NAILED WITH 8d NAILS @ 6" O.C. ON EDGES AND 12" O.C. IN FIELD U.N.O. REFER TO SHEAR WALL SCHEDULE FOR MORE INFORMATION.
- ALL WOOD PLATE SPLICES SHALL BE STAGGERED AT 4'-0" MIN.
- PROVIDE MIN. (2) 2x12 UP TO 4'-0" SPAN, (2) ML10 FOR 4'-0" TO 6'-0" SPAN, (2) ML12 FOR 6'-0" TO 9'-0" SPAN WHERE HEADER/LINTEL/BEAM SIZES ARE NOT SPECIFIED ON PLANS. ANY SPANS LARGER THAN 9'-0" SUPPORITNG FRAMING MEMBERS (POSTS/BEAMS/BEARING WALLS) AND NOT SPECIFIED ON PLANS SHALL BE NOTIFIED TO ENGINEER IMMEDIATELY.
- PROVIDE MIN. DOUBLE JOISTS OR SPECIAL FLOOR TRUSS UNDER (2) 2x POSTS AND (2) PLY MICROLAM LVL OR SPECIAL FLOOR TRUSS TO MATCH FLOOR THICKNESS UNDER (3) 2x POSTS UNLESS NOTED OTHERWISE ON THE PLAN. CONTRACTOR SHALL NOTIFY ENGINEER FOR SUPPORTING STRUCTURAL MEMBER FOR ALL OTHER POST SIZES COMING FROM ABOVE.
- PROVIDE MIN. (3) 2x POSTS UNDER ALL BEAMS/GIRDER TRUSSES/HEADERS U.N.O. ON PLANS.
- PROVIDE SOLID BLOCKING WITHIN FLOOR SYSTEM FOR POSTS/JACKSTUDS COMING FROM ABOVE.
- ALL POSTS/JACKS SHALL CONTINUE DOWN TO FOUNDATION/STRUCTURAL MEMBERS SUCH AS BEAMS/GIRDERS/GIRDER TRUSSES. NOTIFY ENGINEER IF ANY DESCRIPANCY FOUND DURING CONSTRUCTION.
- PROVIDE DOUBLE JOISTS OR SPECIAL TRUSS UNDER ALL WALLS/PARTITIONS EXTEND 1/2 OR MORE OF FRAMING SPAN.
- PROVIDE BLOCKING BETWEEN TOP FLANGE/CHORD OF JOISTS/FLOOR TRUSS SUPPORTING PARTITION WALL FROM ABOVE.
- PROVIDE FULL HEIGHT BLOCKING BETWEEN FLOOR JOISTS/TRUSSES SUPPORTING BEARING WALL FROM ABOVE.
- ALL DIMENSION LUMBER SHALL BE DRESSED S4S AND SHALL BEAR GRADE STAMP OF THE MANUFACTURER'S ASSOCIATION.
- ALL LUMBER SHALL BE SEASONED AND FREE FROM WRAP.
- PROVIDE SOLID BLOCKING BETWEEN JOISTS AND RAFTERS AT ALL BEARING POINTS AND AT MIN. OF 8'-0" O.C.
- PROVIDE STRONG BACKS AT MIN. OF 10'-0" O.C. AT ALL FLOOR TRUSSES.
- PROVIDE CONTINUOUS RIM BOARD AT PERIMETER AND AT END BEARING WALLS WHEN I-JOISTS ARE USED FOR FLOOR FRAMING.
- PROVIDE MIN. 1 3/4" BEARING AT END AND 3 1/2" MIN. BEARING AT INTERMEDIATE SUPPORT WHEN I-JOISTS ARE USED FOR FLOOR FRAMING.
- PROVIDE WEB-STIFFENERS, SQUASH BLOCKS, BEARING BLOCKS, BLOCKING PANELS, FILLER BLOCKS, BACKER BLOCKS AS RECOMMENDED BY MANUFACTURER. REFER TO MANUFACTURER'S GUIDELINES FOR INSTALLATION AND FASTENING.
- PRE-ENGINEERED/PRE-FABRICATED WOOD ROOF/FLOOR TRUSSES SHALL BE IN ACCORDANCE WITH "DESIGN SPECIFICATIONS FOR METAL PLATE CONNECTED WOOD TRUSSES " BY "TRUSS PLATE IINSTUTE (TPI - I)"
- PROVIDE HURRICANE CLIPS TO RESIST UPLIFT AS SHOWN ON SHOP DRAWINGS. PROVIDE SIMPSON "H2.5" HURRICANE CLIP MIN.
- REFER & FOLLOW "BCSI" GUIDES B1 THRU B11 FOR HANDLING, INSTALLING, RESTRAINING AND BRACING OF METAL PLATE CONNECTED WOOD TRUSSES.
- INSTALLATION OF PRE-ENGINEERED/PRE-FABRICATED ROOF AND/OR FLOOR TRUSSES SHALL BE DONE PER TRUSS DESIGN DRAWINGS AND TRUSS ENGINEER SHALL BE RESPONSIBLE FOR PROVIDING ANY REPAIRS OR ALTERATIONS IN TRUSS CONFIGURATIONS.

EXISTING CONDITIONS:

- ALL EXISTING STRUCTURAL MEMBERS TO REMAIN INTACT UNLESS SPECIFICALLY NOTED TO BE REMOVED BY MOST RECENT DEMOLITION DOCUMENTS BY ARCHITECT OR OTHERWISE NOTED ON THESE DRAWINGS.
- ALL INFORMATION ON THESE DRAWINGS RELATED TO EXISTING CONDITIONS ARE PROVIDED BASED ON AVAILABLE CONTRACT DRAWINGS OR INFORMATION PER ARCHITECTURAL DRAWINGS. CONTRACTOR IS RESPONSIBLE FOR FIELD VERIFYING ALL EXISTING CONDITIONS AND NOTIFY STRUCTURAL ENGINEER IF ANY DISCREPANCY IS FOUND BETWEEN CONTRACT DRAWINGS AND EXISTING CONDITIONS.
- THE PORTION OF THE STRUCTURE THAT IS SHOWN TO BE STRUCTURALLY MODIFIED HAVE BEEN DESIGNED ACCORDING TO BEST ENGINEERING PRACTICE. HOWEVER WE DO NOT ASSUME RESPONSIBILITY FOR ANY DAMAGE THAT MAY ARISE FOR ANY PORTION OF THE BUILDING NOT REDESIGNED, ALTERED OR CONSTRUCTED UNDER THIS SET OF DESIGN DRAWINGS. WE DO NOT ASSUME ANY RESPONSIBILITY OR LIABILITY TOWARDS DEFICIENCIES IN THE CONDITION OF THE BUILDING PRIOR TO RENOVATION PER NEW CONTRACT DRAWINGS.
- CONTRACTOR SHALL FIELD VERIFY ALL DIMENSIONS PRIOR TO COMMENCEMENT OF ANY WORK.

WOOD FASTENERS/CONNECTORS:

- FASTENERS USED BELOW GRADE TO ATTACH PLYWOOD TO EXTERIOR WALLS OR CRAWL SPACE STUD WALLS OR KNEE WALL CONSTRUCTION OVER FOUNDATION SHALL BE TYPE 304 OR 316 STAINLESS STEEL.
- ALL MECHANICAL WOOD CONNECTORS SHALL BE CLEARLY SPECIFIED ON SHOP DRAWINGS SUPPLIED BY MANUFACTURER AND SHALL BE DESIGNED FOR APPROPRIATE LOAD AS REQUIRED BY GOVERNING CODE/JURISDICTION.
- ALL MECHANICAL CONNECTORS AND/OR FASTENERS INCLUDING NAILS/BOLTS/SCREWS EXPOSED TO CONCRETE/MASONRY/WEATHER SHALL BE HOT DIP GALVANIZED OR STAINLESS STEEL OR APPROVED BY MANUFACTURER FOR SUCH USE.
- BOLT HOLES SHALL BE A MIN. OF 1/32" TO A MAX. OF 1/16" LARGER THAN THE BOLT DIAMETER.
- A METAL PLATE OR WASHER NOT LESS THAN A STANDARD OVERSIZED CUT WASHER SHALL BE BETWEEN THE WOOD AND THE BOLT HEAD AND BETWEEN THE WOOD AND THE NUT.
- SNUG TIGHT ALL BOLTS. TIGHTEN CONNECTIONS WHICH HAVE LOOSENED DUE TO WOOD SHRINKAGE.
- INSTALL BOLTS TO EXCLUDE THREADED PORTIONS OF BOLTS FROM SHEAR PLANES.
- LAG SCREWS SHALL BE INSTALLED IN PRE-DILLED HOLES.
- THE CLEARANCE HOLE FOR THE SHANK SHALL HAVE THE SAME DIAMETER AS THE SHANK AND THE SAME DEPTH OF PENETRATION AS THE LENGTH OF THE SHANK.
- THE LEAD HOLE FOR THE THREADED PORTION SHALL HAVE A DIAMETER EQUAL TO 75% FOR SOUTHERN PINE, 70% FOR OTHER SPECIES OF THE SHANK DIAMETER AND A MIN. LENGTH EQUAL TO LENGTH OF THREADED PORTION.
- WOOD SILL PLATE SHALL BE ANCHORED TO CONCRETE/MASONRY W/ 1/2" DIA. ANCHOR BOLTS WITH MIN. 7" EMBEDMENT AND 6'-0" O.C. AND 12" MAX. FROM PLATE ENDS OR SPLICES. REFER TO MANUFACTURER'S RECOMMENDATIONS FOR ALTERNATE ANCHORS. REFER TO SHEAR WALL SCHEDULE FOR ADDITIONAL ANCHORAGE REQUIREMENTS. PROVIDE MIN. 3"x3" WASHERS TO ANCHOR BOLTS WITH ENGINEERED SHEAR WALLS (SW) ARE SPECIFIED ON DRAWINGS.
- REFER TO FASTENING SCHEDULE FOR MORE INFORMATION.

NOTES ON FASTENER SCHEDULE (IRC 2018 - TABLE R602.3(1)):

a. ALL NAILS ARE SMOOTH-COMMON, BOX OR DEFORMED SHANKS EXCEPT WHERE OTHERWISE STATED. NAILS USED FOR FRAMING AND SHEATHING CONNECTIONS SHALL HAVE MIN. AVERAGE BENDING YIELD STRENGTHS AS SHOWN 80 ksi FOR SHANK DIAMETER OF 0.192 INCHES, 90 ksi FOR SHANK DIAMETERS LARGER THAN 0.142 INCHES BUT NOT LARGER THAN 0.177 INCHES AND 100 ksi FOR SHANK DIAMETERS OF 0.142 INCHES OR LESS
b. STAPLES ARE 16 GAGE WIRE AND HAVE A MINIMUM 7/16 INCH ON DIAMETER CROWN WIDTH
c. NAILS SHALL BE SPACED AT NOT MORE THAN 6" O.C. AT ALL SUPPORTS WHERE SPANS ARE 48" OR GREATER
d. 4'-0" x 8'-0" OR 4'-0" x 9'-0" PANELS SHALL BE APPLIED VERTICALLY.
e. SPACING OF FASTENERS NOT INCLUDED IN THIS TABLE SHALL BE BASED ON TABLE R602.3(2) OF IRC 2018.
f. FOR REGIONS HAVING BASIC WIND SPEED OF 110 MPH OR GREATER 8d DEFORMED (2 1/2" x 0.120) NAILS SHALL BE USED FOR ATTACHING PLYWOOD AND WOOD STRUCTURAL PANEL ROOF SHEATHING TO FRAMING WITHIN MIN. 48" DISTANCE FROM GABLE END WALLS, IF MEAN ROOF HEIGHT IS MORE THAN 25'-0" UP TO 35'-0" MAXIMUM.
g. FOR REGIONS HAVING BASIC WIND SPEED OF 100 MPH OR LESS, NAILS FOR ATTACHING WOOD STRUCTURAL PANEL ROOF SHEATHING TO GABLE END WALL FRAMING SHALL BE SPACED 6" O.C. WHEN BASIC WIND SPEED IS GREATER THAN 100 MPH, NAILS FOR ATTACHING PANEL ROOF SHEATHING TO INTERMEDIATE SUPPORTS SHALL BE SPACED 6" O.C. FOR MIN. 48" DISTANCE FROM RIDGES, EAVES AND GABLE END WALLS; AND 4" O.C. TO GABLE END WALL FRAMING.
h. GYPSUM SHEATHING SHALL CONFORM TO ASTM C 1396 AND SHALL BE INSTALLED IN ACCORDANCE WITH GA 253. FIBERBOARD SHEATHING SHALL CONFORM TO ASTM C 208.
i. SPACING OF FASTENERS ON FLOOR SHEATHING PANEL EDGES APPLIES TO PANEL EDGES SUPPORTED BY FRAMING MEMBERS AND REQUIRED BLOCKING AND AT ALL FLOOR PERIMETERS ONLY. SPACING OF FASTENERS ON ROOF SHEATHING PANEL EDGES APPLIES TO PANEL EDGES SUPPORTED BY FRAMING MEMBERS AND REQUIRED BLOCKING. BLOCKING OF ROOF OR FLOOR SHEATHING PANEL EDGES PERPENDICULAR TO THE FRAMING MEMBERS NEED NOT BE PROVIDED EXCEPT AS REQUIRED BY OTHER PROVISIONS OF THE CODE. FLOOR PERIMETER SHALL BE SUPPORTED BY FRAMING MEMBERS OR SOLID BLOCKING.

ABBREVIATIONS:

ARCH=	ARCHITECTURAL
B.E.W=	BOTTOM EACH WAY
BM=	BEAM
BRG=	BEARING
COL=	COLUMN
CONC.=	CONCRETE
CONT=	CONTINUOUS
DBL=	DOUBLE
EA=	EACH
E.E.=	EACH END
EXP=	EXPANSION
EXT.=	EXTERIOR
FDN=	FOUNDATION
FTG=	FOOTING
G.T.=	GIRDER TRUSS
HDR=	HEADER
INT.=	INTERIOR
INFO	INFORMATION
J=	JACK STUD
MANUF=	MANUFACTURER
MIN=	MINIMUM
MAX=	MAXIMUM
ML=	MICROLAM
N.T.S=	NOT TO SCALE
O.C.=	ON CENTER
PLYWD=	PLYWOOD
P.T.=	PRESSURE TREATED
P.A. =	POST FROM ABOVE
REQD=	REQUIRED
S=	KING STUD
SPF=	SPRUCE PINE FIR
SP=	SOUTHERN PINE
STL=	STEEL
TYP=	TYPICAL
W/=	WITH
WD=	WOOD
WWF=	WELDED WIRE FABRIC
U.N.O.=	UNLESS NOTED OTHERWISE

NO.	DESCRIPTION OF BUILDING ELEMENT	FASTNERS
1	BLOCKING BETWEEN JOISTS OR RAFTERS TO TOP PLATE (TOE NAIL)	(3) 8d (2 1/2" x 0.113")
2	CEILING JOISTS TO PLATE (TOE NAIL)	(3) 8d (2 1/2" x 0.113")
3	CEILING JOISTS NOT ATTACHED TO PARALLEL RAFTER, LAPS OVER PARTIAIONS (FACE NAIL)	(3) 10d
4	COLLAR TIE RAFTER (FACE NAIL) OR 1 1/4" x 20 GAGE RIDGE STRAP	(3) 10d (3" x 0.128")
5	RAFTER TO PLATE (TOE NAIL)	(2) 16d (3 1/2" x 0.135")
6	ROOF RAFTERS TO RIDGE, VALLEY OR HIP RAFTERS TOE NAILS FACE NAILS	(4) 16d (3 1/2" x 0.135") (3) 16d (3 1/2" x 0.135")
7	BUILT-UP CORNER STUDS	10d (3" x 0.128") @ 24" O.C.
8	BUILT-UP HEADER, TWO PIECES W/ 1/2" SPACER	16d (3 1/2" x 0.135") @ 16" O.C. ALONG EACH EDGE
9	CONTINUED HEADER, TWO PIECES	16d (3 1/2" x 0.135") @ 16" O.C. ALONG EACH EDGE
10	CONTINUOUS HEADER TO STUD (TOE NAIL)	(4) 8d (2 1/2" x 0.113")
11	DOUBLE STUDS (FACE NAILS)	10d (3" x 0.128") @ 24" O.C.
12	DOUBLE TOP PLATES (FACE NAILS)	10d (3" x 0.128") @ 24" O.C.
13	DOUBLE TOP PLATES, MIN. 48" OFFSET OF END JOINSTS (FACE NAILS IN LAPPED AREA)	(8) 16d (3 1/2" x 0.135")
14	SOLE PLATE TO JOIST OR BLOCKING (FACE NAIL)	16d (3 1/2" x 0.135") @ 16" O.C.
15	SOLE PLATE TO JOIST OR BLOCKING (FACE NAIL) AT BRACED WALL PANELS	(3) 16d (3 1/2" x 0.135") @ 16" O.C.

NO.	DESCRIPTION OF BUILDING ELEMENT	FASTNERS
16	STUD TO SOLE PLATE (TOE NAIL)	(3) 8d (2 1/2" x 0.113") OR (2) 16d (3 1/2" x 0.135")
17	TOP OR SOLE PLATE TO STUD (END NAIL)	(2) 16d (3 1/2" x 0.135")
18	TOP PLATES, LAPS AT CORNERS AND INTERSECTIONS (FACE NAIL)	(2) 10d (3" x 0.128")
19	1" BRACE TO EACH STUD AND PLATE (FACE NAIL)	(2) 8d (2 1/2" x 0.113") OR (2) STAPLES 1 3/4"
20	1" x 6" SHEATHING TO EACH BEARING (FACE NAIL)	(2) 8d (2 1/2" x 0.113") OR (2) STAPLES 1 3/4"
21	1" x 8" SHEATHING TO EACH BEARING (FACE NAIL)	(2) 8d (2 1/2" x 0.113") OR (3) STAPLES 1 3/4"
22	WIDER THAN 1" x 8" SHEATHING TO EACH BEARING (FACE NAIL)	(3) 8d (2 1/2" x 0.113") OR (4) STAPLES 1 3/4"
23	JOIST TO SILL OR GIRDER (TOE NAIL)	(3) 8d (2 1/2" x 0.113")
24	1" x 6" SUBFLOOR OR LESS TO EACH JOIST (FACE NAIL)	(2) 8d (2 1/2" x 0.113") OR (2) STAPLES 1 3/4"
25	2" SUBFLOOR TO JOIST OR GIRDER (BLIND AND FACE NAIL)	(2) 16d (3 1/2" x 0.135")
26	RIM JOIST TO TOP PLATE (TOE NAIL) ROOF APPLICATOIN ALSO	8d (2 1/2" x 0.113") @ 6" O.C.
27	2" PLANKS (PLANK & BEAM - FLOOR & ROOF)	(2) 16d (3 1/2" x 0.135") @ E.E.
28	BUILT-UP GIRDERS & BEAMS, 2" LUMBER LAYERS	10d (3" x 0.128") NAIL EA. LAYER 32" O.C. AT TOP AND BOTT. STAGGERED. TWO NAILS AT ENDS AND AT EA. SPLICE.
29	LEDGER STRIP SUPPORTING JOISTS OR RAFTERS	(3) 16d (3 1/2" x 0.135") AT EACH JOIST OR RAFTER

NO.	BUILDING MATERIALS	DESCRIPTION OF FASTENERS	NAILING PATTERN	
			EDGES	INTERMEDIATE SUPPORTS
WOOD STRUCTURAL PANELS, SUBFLOOR, ROOF AND INTERIOR WALL SHEATHING TO FRAMING & PARTICLE BOARD WALL SHEATHING TO FRAMING				
30	3/8" - 1/2"	6d (2" x 0.113") COMMON NAIL (SUBFLOOR, WALL) (j) 8d (2 1/2" x 0.131") COMMON NAIL (ROOF)	6"	12" (g)
31	5/16" - 1/2"	6d (2" x 0.113") COMMON NAIL (SUBFLOOR, WALL) 8d (2 1/2" x 0.131") COMMON NAIL (ROOF) (f)	6"	12" (g)
32	19/32" - 1"	8d (2 1/2" x 0.131") COMMON NAIL	6"	12" (g)
33	1 1/8" - 1 1/4"	10d (3" x 0.148") COMMON NAIL OR 8d (2 1/2" x 0.131") DEFORMED NAIL	6"	12"
OTHER WALL SHEATHING (h)				
34	1/2" STRUCTURAL CELLULOSIC FIBERBOARD SHEATHING	1/2" GALVANIZED ROOFING NAIL, 7/16' CROWN OR 16 GA. STAPLE, 1" CROWN & 1 1/4" LONG	3"	6"
35	25/32" STRUCTURAL CELLULOSIC FIBERBOARD SHEATHING	1 3/4" GALVANIZED ROOFING NAIL, 7/16' CROWN OR 16 GA. STAPLE, 1" CROWN & 1 1/2" LONG	3"	6"
36	1/2" GYPSUM SHEATHING (d)	1 1/2" GALVANIZED ROOFING NAIL OR 1 1/2" LONG GALVANIZED STAPLES, OR 1 1/4" SCREWS TYPE W OR S.	7"	7"
37	1/2" GYPSUM SHEATHING (d)	1 3/4" GALVANIZED ROOFING NAIL OR 1 5/8" LONG GALVANIZED STAPLES, OR 1 5/8" SCREWS TYPE W OR S.	7"	7"
WOOD STRUCTURAL PANELS, COMBINATION OF SUBFLOOR UNDERLAYMENT TO FRAMING				
38	3/4" AND LESS	6d (2" x 0.120") DEFORMED NAIL OR 8d (2 1/2" x 0.131") COMMON NAIL	6"	12"
39	7/8" - 1"	8d (2 1/2" x 0.131") COMMON NAIL OR 8d (2 1/2" x 0.120") DEFORMED NAIL	6"	12"
40	1 1/8" - 1 1/4"	10d (3" x 0.148") COMMON NAIL OR 8d (2 1/2" x 0.120") DEFORMED NAIL	6"	12"

GTMARCHITECTS

7735 OLD GEORGETOWN ROAD
SUITE 700
BETHESDA, MD 20814
(240)333-2000
(240)333-2001 FAX
WWW.GTMARCHITECTS.COM

GTM

Seal

40082

9/29/2023

DocuSigned by:
Kaushal Kansara
2D576AF8D063457...

Consultant

structBIM
ENGINEERS
WE DESIGN....WE BIM
46400 BENEDICT DR, SUITE #211
PHONE: 703-657-4481
E-MAIL: info@structBIM.com

Project

3929 WASHINGTON ST,
KENSINGTON, MD

I certify that these documents were prepared or approved by me, and that I am a duly licensed Professional Engineer under the laws of the State of Maryland, license number 40082, Expiration Date: 02-13-2025.

Issue Description | Date

structBIM Project No. 23-0260
Checked By KK
Drawn By KK
Scale 1/4" = 1'-0"

Sheet Title
GENERAL NOTES

Sheet No.
S001

PLOTTED ON: 9/29/2023 10:17:12 AM

APPROVED
Montgomery County
Historic Preservation Commission

REVIEWED
By Dan.Bruechert at 4:21 pm, Dec 18, 2023

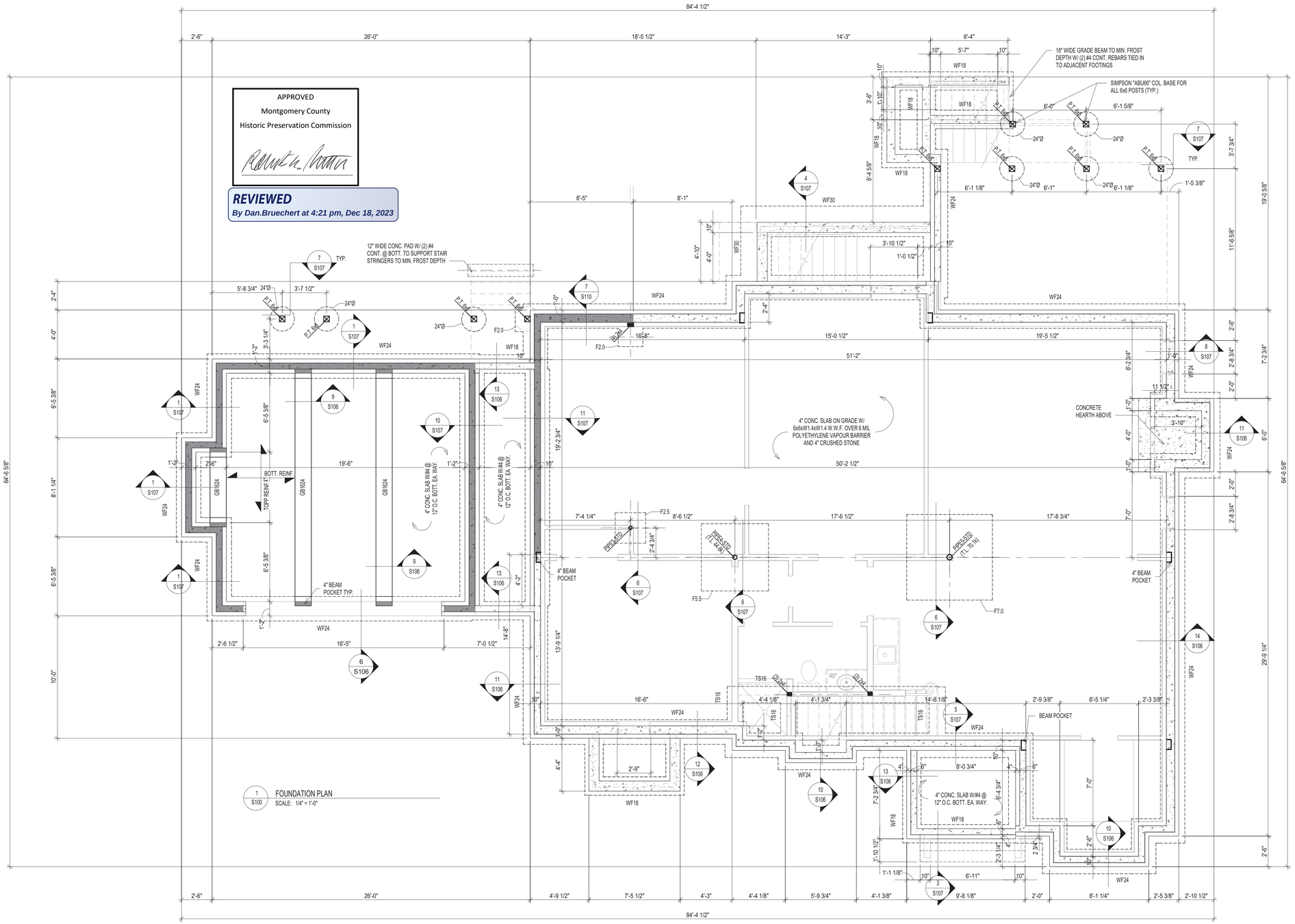

1 S100 FOUNDATION PLAN
SCALE: 1/4" = 1'-0"

LEGENDS:

TS = THICKENED SLAB
WF = WALL FOOTING
F = FOOTING

FOUNDATION NOTES:

1. FOUNDATION DESIGN IS BASED ON ASSUMED DESIGN CRITERIA AS SPECIFIED ON GENERAL NOTES SHEET. AND SHALL BE FIELD VERIFIED BY GEOTECHNICAL ENGINEER. NOTIFY ENGINEER IF ANY DESCRIPANCIES ARE FOUND OR CRITERIA DIFFERS FROM ASSUMED CRITERIA.
2. VERIFY AND COORDINATE ALL DIMENSIONS WITH ARCHITECTURAL AND CIVIL DRAWINGS. NOTIFY ENGINEER IF ANY COORINDATION IS REQUIRED.
3. BASEMENT SLAB SHALL BE 4" CONC. SLAB ON GRADE WITH 6x6xW1.4xW1.4 W.W.F U.N.O.
4. ALL EXTERIOR FOOTINGS SHALL BE LOWERED TO MINIMUM FROST DEPTH AS REQUIRED BY LOCAL JURISDICTIONS.
5. PROVIDE MIN. 3'-0"x3'-0"x1'-0" CONC. FOOTING W/ #5 @ 12" O.C. BOTT. EA. WAY. UNDER EACH POST UNLESS NOTED OTHERWISE ON FOUDATION PLAN.
6. PROVIDE MIN. 16"x12" CONC. THICKENED SLAB UNDER BEARING WALLS UNLESS NOTED OTHERWISE.
7. PROVIDE MIN. 24"x8" CONC. WALL FOOTING W/ MIN. (2) #4 CONT. AT BOTT. UNDER ALL FOUNDATION WALLS UNLESS NOTED OTHERWISE.
8. PROVIDE WATERPROOFING, DAMP PROOFING PER APPLICABLE CODES AT FOUNDATION WALL, FOOTINGS AND SLABS.
9. INSTALL CONTINUOUS 4"Ø PERFORATED DRAIN PIPES ON EACH SIDE OF FOOTING. CONNECTED WITH 1 1/2"Ø WEEP HOLES @ 8'-0" O.C. AND DRAIN TO SUMP PUMP OR DAY LIGHT.

PLAN LEGENDS & SYMBOLS:

- INDICATES BEARING WALL
- INDICATES DRAIN HOLE FROM ABOVE
- INDICATES JOIST/TRUSS HANEGR (REFER TO SHOP DWGS)
- INDICATES FRAMING DIRECTION
- INDICATES REBAR DIRECTION
- (_J+_S) — INDICATES NO. OF KING STUDS AT EACH END; INDICATES NO. OF JACK STUDS AT EACH END
- WF?? — INDICATES WALL FOOTING; WIDTH OF WALL FOOTING IN INCHES
- TS?? — INDICATES THICKENED SLAB; WIDTH OF THICKENED SLAB IN INCHES
- Fx.x — INDICATES ISOLATED COLUMN FOOTING; INDICATES SIZE OF FOOTING IN DECIMAL FEET
- ML?? — MICROLAM LVL 2.0E; DEPTH OF MICROLAM LVL IN INCHES
- LSL?? — LAMINATED STRAND LUMBER 1.7E; DEPTH OF TIMBERSTAND LSL BEAM IN INCHES
- PSL?? — PARALLAM STRAND LUMBER 2.0E; WIDTHxDEPTH OF MEMBER
- CC — COLUMN CAP
- CB — COLUMN BASE
- HD — HOLD DOWN ANCHOR
- MS — METAL STRAP
- H — JOIST/TRUSS/BEAM HANGER
- HC — HURRICANE CLIPS

STEEL COLUMN SCHEDULE

MARK	DESCRIPTION
PIPE3-STD	3"Ø STANDARD STEEL PIPE COLUMN
PIPE4-STD	4"Ø STANDARD STEEL PIPE COLUMN
PIPE5-STD	5"Ø STANDARD STEEL PIPE COLUMN

WALL FOOTING SCHEDULE

MARK	DESCRIPTION
TS16	16" x 8" CONC. THICKENED SLAB W/ (2) #4 CONT. @ BOTT.
WF16	16" x 8" CONC. FTG. W/ (2) #4 CONT. @ BOTT.
WF18	18" x 8" CONC. FTG. W/ (2) #4 CONT. @ BOTT.
WF24	24" x 8" CONC. FTG. W/ (2) #4 CONT. @ BOTT.
WF30	30" x 12" CONC. FTG. W/ (2) #4 CONT. @ BOTT.

COLUMN FOOTING SCHEDULE

MARK	DESCRIPTION
F2.0	2'-0" x 2'-0" x 12" CONC. FTG W/ #4 @ 12" O.C. BOTT. EA. WAY
F2.5	2'-6" x 2'-6" x 12" CONC. FTG W/ #4 @ 12" O.C. BOTT. EA. WAY
F5.5	5'-6" x 5'-6" x 12" CONC. FTG W/ #5 @ 12" O.C. BOTT. EA. WAY

CONCRETE GRADE BEAM SCHEDULE

MARK	DESCRIPTION
GB1624	16" x 24" CONC. GRADE BEAM W/ (5) #5 CONT. @ BOTT.

CONCRETE LINTEL SCHEDULE

MARK	DESCRIPTION
CB812	8" x 12" CONC. LINTEL W/ (2) #5 CONT. @ BOTT.
CB1016	10" x 16" CONC. LINTEL W/ (2) #5 CONT. @ BOTT.

CONC. PIER SCHEDULE

MARK	DESCRIPTION

BASEMENT FOUNDATION WALL SCHEDULE (MAX. UNSPPORTED HEIGHT = 9'-0")

THICKNESS	UNBALANCED BACK FILL HEIGHT	VERTICAL REBARS (E.F.P. = 30 PSF/FT)	VERTICAL REBARS (E.F.P. = 45 PSF/FT)	VERTICAL REBARS (E.F.P. = 60 PSF/FT)	HORIZONTAL REBARS
8"	UP TO 5'-0"	NOT REQD.	NOT REQD.	NOT REQUIRED	#4 @ 24" O.C.
	5'-0" < HT < 6'-0"	NOT REQD.	NOT REQD.	#5 @ 36" O.C.	
	6'-0" < HT < 7'-0"	NOT REQD.	#5 @ 36" O.C.	#5 @ 24" O.C.	
	7'-0" < HT < 8'-0"	#4 @ 24" O.C.	#5 @ 24" O.C.	#5 @ 20" O.C.	
	8'-0" < HT < 9'-0"	#4 @ 18" O.C.	#5 @ 20" O.C.	#5 @ 16" O.C.	

NOTE:
1. BASED ON TABLE 3.12 OF PCA-100 "PRESCRIPTIVE DESIGN OF EXTERIOR CONCRETE WALLS" WITH FOLLOWING CRITERIA
2. fC' = 3000 psi & Fy = 60000 ksi
3. E.F.P. = EQUIVALENT EARTH PRESSURE
4. MAXIMUM WALL HEIGHT = 9'-0"
5. MIN. COVER TO REINFORCEMENT AT INSIDE FACE = 3/4" & MIN. COVER TO REINFORCEMENT AT OUTSIDE FACE = 1 1/2"
6. PROVIDE MINIMUM ONE #4 REBAR 12" FROM TOP & BOTTOM.
7. PROVIDE PROPER DRAINAGE TO THE BACKFILL REFER TO ARCHITECTURAL DRAWINGS FOR DRAINAGE AND WATEPROOFING
8. REFER TO GEOTECHNICAL REPORT FOR ALL FURTHER RECOMMENDATIONS. GEOTECHNICAL ENGINEER TO VERIFY FOUNDATION DESIGN CRITERIA FOR SOIL BEARING CAPAICTY AND EARTH PRESSURE.
9. REBARS CAN BE SUBSTITUTED WITH #4 REBARS TO MATCH SPECIFIED AREA OF REINFORCEMENT IN ABOVE TABLE

BASEMENT FOUNDATION WALL SCHEDULE (MAX. UNSPPORTED HEIGHT = 9'-0")

THICKNESS	UNBALANCED BACK FILL HEIGHT	VERTICAL REBARS (E.F.P. = 30 PSF/FT)	VERTICAL REBARS (E.F.P. = 45 PSF/FT)	VERTICAL REBARS (E.F.P. = 60 PSF/FT)	HORIZONTAL REBARS
10"	UP TO 6'-0"	NOT REQD.	NOT REQD.	NOT REQD.	#4 @ 24" O.C.
	6'-0" < HT < 7'-0"	NOT REQD.	NOT REQD.	#4 @ 24" O.C.	
	7'-0" < HT < 8'-0"	NOT REQD.	#4 @ 18" O.C.	#4 @ 16" O.C.	
	8'-0" < HT < 9'-0"	#4 @ 24" O.C.	#4 @ 16" O.C.	#4 @ 12" O.C.	
	9'-0" < HT < 10'-0"	#4 @ 16" O.C.	#4 @ 12" O.C.	#5 @ 16" O.C.	

NOTE:
1. BASED ON TABLE A.4 OF ACI 332-10 WITH FOLLOWING CRITERIA
2. fC' = 3000 psi & Fy = 60000 ksi
3. E.F.P. = EQUIVALENT EARTH PRESSURE
4. MAXIMUM WALL HEIGHT = 9'-0"
5. MIN. COVER TO REINFORCEMENT AT INSIDE FACE = 3/4" & MIN. COVER TO REINFORCEMENT AT OUTSIDE FACE = 1 1/2"
6. PROVIDE MINIMUM ONE #4 REBAR 12" FROM TOP & BOTTOM.
7. PROVIDE PROPER DRAINAGE TO THE BACKFILL REFER TO ARCHITECTURAL DRAWINGS FOR DRAINAGE AND WATEPROOFING
8. REFER TO GEOTECHNICAL REPORT FOR ALL FURTHER RECOMMENDATIONS. GEOTECHNICAL ENGINEER TO VERIFY FOUNDATION DESIGN CRITERIA FOR SOIL BEARING CAPAICTY AND EARTH PRESSURE.

BASEMENT FOUNDATION WALL SCHEDULE (MAX. UNSPPORTED HEIGHT = 10'-0")

THICKNESS	UNBALANCED BACK FILL HEIGHT	VERTICAL REBARS (E.F.P. = 30 PSF/FT)	VERTICAL REBARS (E.F.P. = 45 PSF/FT)	VERTICAL REBARS (E.F.P. = 60 PSF/FT)	HORIZONTAL REBARS
12"	UP TO 5'-0"	NOT REQD.	NOT REQD.	NOT REQUIRED	#4 @ 24" O.C.
	5'-0" < HT < 6'-0"	NOT REQD.	NOT REQD.	NOT REQUIRED	
	6'-0" < HT < 7'-0"	NOT REQD.	NOT REQD.	NOT REQUIRED	
	7'-0" < HT < 8'-0"	NOT REQD.	NOT REQD.	#4 @ 20" O.C.	
	8'-0" < HT < 9'-0"	NOT REQD.	#4 @ 48" O.C.	#4 @ 16" O.C.	
	9'-0" < HT < 10'-0"	NOT REQD.	#4 @ 16" O.C.	#4 @ 12" O.C.	

NOTE:
1. BASED ON TABLE 3.12 OF PCA-100 "PRESCRIPTIVE DESIGN OF EXTERIOR CONCRETE WALLS" WITH FOLLOWING CRITERIA
2. fC' = 3000 psi & Fy = 60000 ksi
3. E.F.P. = EQUIVALENT EARTH PRESSURE
4. MAXIMUM WALL HEIGHT = 9'-0"
5. MIN. COVER TO REINFORCEMENT AT INSIDE FACE = 3/4" & MIN. COVER TO REINFORCEMENT AT OUTSIDE FACE = 1 1/2"
6. PROVIDE MINIMUM ONE #4 REBAR 12" FROM TOP & BOTTOM.
7. PROVIDE PROPER DRAINAGE TO THE BACKFILL REFER TO ARCHITECTURAL DRAWINGS FOR DRAINAGE AND WATEPROOFING
8. REFER TO GEOTECHNICAL REPORT FOR ALL FURTHER RECOMMENDATIONS. GEOTECHNICAL ENGINEER TO VERIFY FOUNDATION DESIGN CRITERIA FOR SOIL BEARING CAPAICTY AND EARTH PRESSURE.

GTM ARCHITECTS
7735 OLD GEORGETOWN ROAD
SUITE 700
BETHESDA, MD 20814
(240)333-2000
(240)333-2001 FAX
WWW.GTMARCHITECTS.COM

Seal

9/29/2023

Consultant

structBIM ENGINEERS
WE DESIGN....WE BIM
46400 BENEDICT DR, SUITE #211
PHONE: 703-657-4481
E-MAIL: info@structBIM.com

Project

3929 WASHINGTON ST,
KENSINGTON, MD

I certify that these documents were prepared or approved by me, and that I am a duly licensed Professional Engineer under the laws of the State of Maryland, license number 40082, Expiration Date: 02-13-2025.

Issue Description	*Date*

structBIM Project No.	23-0260
Checked By	KK
Drawn By	KK
Scale	1/4" = 1'-0"

Sheet Title

FOUNDATION PLAN

Sheet No.

S100

PLOTTED ON: 9/29/2023 10:17:32 AM

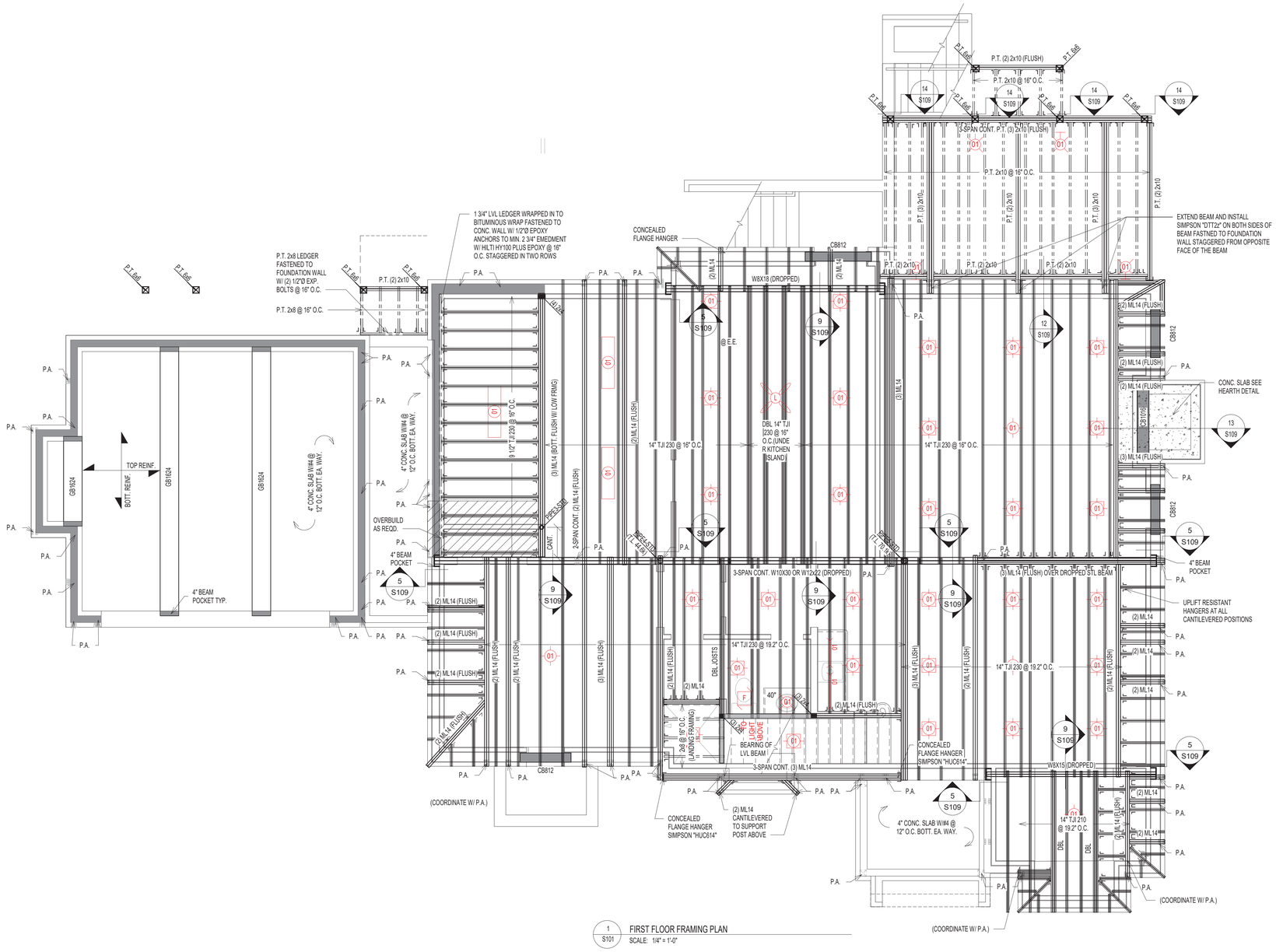

1 S101 FIRST FLOOR FRAMING PLAN
SCALE: 1/4" = 1'-0"

NOTES:

1. FLOOR JOISTS SHALL BE SPACED @ 16" O.C. UNLESS NOTED OTHERWISE.
2. (J) INDICATED JACK STUDS & (S) INDICATES KING STUDS. EXAMPLE: 1J+1S = ONE JACK STUD & ONE KING STUD AT EACH END OF SPECIFIED HEADER.
3. FLOOR SHEATHING SHALL BE 3/4" APA RATED 3/4" T&G PLYWOOD WITH SPAN RATING OF 48/24 OR STURD-I-FLOOR WITH 24" O.C. GRADE.
4. WALL SHEATHING SHALL BE 7/16" APA RATED OSB/PLYWOOD CONTINUOUS SHEATHING W/ 8d NAILS @ 6" O.C.ON EDGES AND 12" O.C. IN-FIELD.
5. INSTALL BRIDGING BETWEEN JOISTS AT MID-SPAN OR AS REQUIRED PER MANUFACTURER BRIDGING BETWEEN JOISTS UNDER KITCHEN PLATFORMS AND CERAMIC TILE AREAS FOR MIN.THREE JOIST BAYS @ 8'-0" O.C. MAX.
6. FLOOR JOISTS SHALL HAVE 1/2" GYPSUM BOARD CEILING ATTACHED DIRECTLY TO UNDERSIDE OF BOTTOM FLANGE OF JOIST. NOTIFY ENGINEER OF ANY UNFINISHED AREAS.
7. ALL JOISTS ARE DESIGNED PER MIN. PRO RATING (BASED ON iLEVEL WEYERHAEUSER PRO RATING CRITERIA) CRITERIA OF 38. NOTIFY ENGINEER, IF HIGHER PRO RATING IS REQUIRED.
8. INSTALL SQUASH BLOCKS AT EVERY BEARING LOCATION AND PROVIDE SOLID BLOCKING UNDER EVERY BEARING WALL FROM ABOVE AT ALL I JOISTS.
9. PROVIDE JOISTS AT MAX. 16" O.C. SPACING UNDER CERAMIC TILE AREAS. JOIST MANUFACTURER TO DESIGN JOISTS FOR DEFLECTION LIMIT OF L/720 OR 0.3" MAX. COORDINATE LOCATION OF CERAMIC TILE AREAS WITH ARCHITECTURAL DRAWINGS.
10. PROVIDE DOUBLE JOISTS UNDER KITCHEN ISLANDS, OVERSIZED BATH TUBS.
11. WEB STIFFENERS ARE REQUIRED WHEN INTERMEDIATE BEARING LENGTH IS LESS THAN 5 1/4" AND SPAN ON EITHER SIDE OF BEARING IS LARGER THAN REQUIRED PER JOIST MANUFACTURER.
12. PROTECT ALL UNTREATED WOOD FROM DIRECT CONTACT WITH CONCRETE OR MASONRY.
13. PROVIDE SQUASH BLOCKS ON BOTH SIDES AT BEARING WALL LOCATIONS WITH ONE 10d NAILS AT EACH FLANGE.
14. PROVIDE BLOCKING PANELS PER MANUFACTURER'S SPECIFICATIONS, IF JOISTS ARE SUPPORTING SHEAR WALL FROM ABOVE.
15. PROVIDE SOLID BLOCKING BETWEEN JOISTS WHEN SUPPORTING BEARING WALL FROM ABOVE.
16. PROVIDE BACKER/FILLER BLOCKS AS RECOMMENDED BY JOIST MANUFACTURER AT CONNECTION LOCATIONS OR MULTIPLE JOISTS SUPPORTING POSTS FROM ABOVE.
17. DO NOT CUT HOLES OR NOTCHES WITHOUT PRIOR APPROVAL FROM ENGINEER OR JOIST MANUFACTURER.
18. PROVIDE SOLID BLOCKING OF SAME SIZE WITHIN FLOOR SYSTEM UNDER ALL JACK STUDS, KING STUDS & POSTS FROM ABOVE.
19. PROVIDE MIN. (2) 2x12 UP TO 4'-0" SPAN, (2) ML10 FOR 4'-0" TO 6'-0" SPAN, (2) ML12 6'-0" TO 9'-0" SPAN WHERE BEAM SIZES ARE NOT SPECIFIED ON PLANS. ANY SPANS LARGER THAN 9'-0" SUPPORTING FRAMING AND NOT SPECIFIED ON PLANS SHALL BE NOTIFIED TO ENGINEER IMMEDIATELY.
20. PROVIDE MIN. DOUBLE JOISTS OR SPECIAL FLOOR TRUSS UNDER (2) 2x POSTS AND (2) PLY MICROLAM LVL OR SPECIAL FLOOR TRUSS TO MATCH FLOOR THICKNESS UNDER (3) 2x POSTS UNLESS NOTED OTHERWISE ON THE PLAN. CONTRACTOR SHALL NOTIFY ENGINEER FOR SUPPORTING STRUCTURAL MEMBER FOR ALL OTHER POST SIZES COMING FROM ABOVE.
21. PROVIDE MIN. (3) 2x POST UNDER BEAMS UNLESS NOTED OTHERWISE.
22. ALL POSTS SHALL CONTINUE DOWN TO FOUNDATION OR STRUCTURAL MEMBER SUCH AS BEAM/GIRDER TRUSS BELOW.
23. PROVIDE MIN. 3 JACK STUDS + 2 KING STUDS AT ALL HEADERS UNLESS NOTED OTHERWISE.
24. ALL WALL STUDS SHALL SPF#2 AND SHALL BE SPACED AT MAX. 16" O.C. UNLESS NOTED OTHERWISE.
25. ALL TWO STORY HIGH WALLS SHALL BE (2) 2x6 SPF#2 BALLOON FRAMED UNLESS NOTED OTHERWISE.
26. PROVIDE FULL HEIGHT BLOCKING BETWEEN JOISTS UP TO THREE JOIST BAYS WHERE JOISTS ARE PARALLEL TO FOUNDATION WALL.

PLAN LEGENDS & SYMBOLS:

- INDICATES BEARING WALL
- INDICATES DRAIN HOLE FROM ABOVE
- INDICATES JOIST/TRUSS HANEGR (REFER TO SHOP DWGS)
- INDICATES FRAMING DIRECTION
- INDICATES REBAR DIRECTION
- (J+_S) — INDICATES NO. OF KING STUDS AT EACH END; INDICATES NO. OF JACK STUDS AT EACH END
- WF?? — INDICATES WALL FOOTING; WIDTH OF WALL FOOTING IN INCHES
- TS?? — INDICATES THICKENED SLAB; WIDTH OF THICKENED SLAB IN INCHES
- Fx.x — INDICATES ISOLATED COLUMN FOOTING; INDICATES SIZE OF FOOTING IN DECIMAL FEET
- ML?? — MICROLAM LVL 2.0E; DEPTH OF MICROLAM LVL IN INCHES
- LSL?? — LAMINATED STRAND LUMBER 1.7E; DEPTH OF TIMBERSTAND LSL BEAM IN INCHES
- PSL?? — PARALLAM STRAND LUMBER 2.0E; WIDTHxDEPTH OF MEMBER
- CC — COLUMN CAP
- CB — COLUMN BASE
- HD — HOLD DOWN ANCHOR
- MS — METAL STRAP
- H — JOIST/TRUSS/BEAM HANGER
- HC — HURRICANE CLIPS

MICROLAM LVL BEAM SCHEDULE

MARK	DESCRIPTION
(2) ML10	(2) 1 3/4" x 9 1/2" LVL - 1.9E
(2) ML12	(2) 1 3/4" x 11 7/8" LVL - 1.9E
(2) ML14	(2) 1 3/4" x 14" LVL - 1.9E
(3) ML10	(3) 1 3/4" x 9 1/2" LVL - 1.9E
(3) ML12	(3) 1 3/4" x 11 7/8" LVL - 1.9E
(3) ML14	(3) 1 3/4" x 14" LVL - 1.9E
(4) ML14	(4) 1 3/4" x 14" LVL - 1.9E

CONC. PIER SCHEDULE

MARK	DESCRIPTION

STEEL COLUMN SCHEDULE

MARK	DESCRIPTION
PIPE3-STD	3" Ø STANDARD STEEL PIPE COLUMN
PIPE4-STD	4"Ø STANDARD STEEL PIPE COLUMN
PIPE5-STD	5"Ø STANDARD STEEL PIPE COLUMN

LOOSE LINTEL SCHEDULE (FOR BRICK SUPPORT)	
UP TO 4'-0"	3 1/2" x 3 1/2" x 3/8"
UP TO 6'-0"	5" x 3 1/2" x 3/8"
UP TO 9'-0"	6" x 3 1/2" x 3/8"
ALL LINTELS TO HAVE MIN. 6" BRG. ON BRICK ON EA. SIDE	

CONCRETE LINTEL SCHEDULE

MARK	DESCRIPTION
CB812	8" x 12" CONC. LINTEL W/ (2) #5 CONT. @ BOTT.
CB1016	10" x 16" CONC. LINTEL W/ (2) #5 CONT. @ BOTT.

APPROVED
Montgomery County
Historic Preservation Commission

REVIEWED
By Dan.Bruechert at 4:21 pm, Dec 18, 2023

GTM ARCHITECTS
7735 OLD GEORGETOWN ROAD
SUITE 700
BETHESDA, MD 20814
(240)333-2000
(240)333-2001 FAX
WWW.GTMARCHITECTS.COM

Seal

STATE OF MARYLAND · KAUSHAL KANSARA · 40082 · PROFESSIONAL ENGINEER

9/29/2023

Developed by: Kaushal Kansara
2D576AFB0083457...

Consultant

structBIM ENGINEERS
WE DESIGN....WE BIM
46400 BENEDICT DR, SUITE #211
PHONE: 703-657-4481
E-MAIL: info@structBIM.com

Project

3929 WASHINGTON ST,
KENSINGTON, MD

I certify that these documents were prepared or approved by me, and that I am a duly licensed Professional Engineer under the laws of the State of Maryland, license number 40082, Expiration Date: 02-13-2025.

Issue Description	*Date*

structBIM Project No.	23-0260
Checked By	KK
Drawn By	KK
Scale	1/4" = 1'-0"

Sheet Title
FIRST FLOOR FRAMING PLAN

Sheet No.
S101

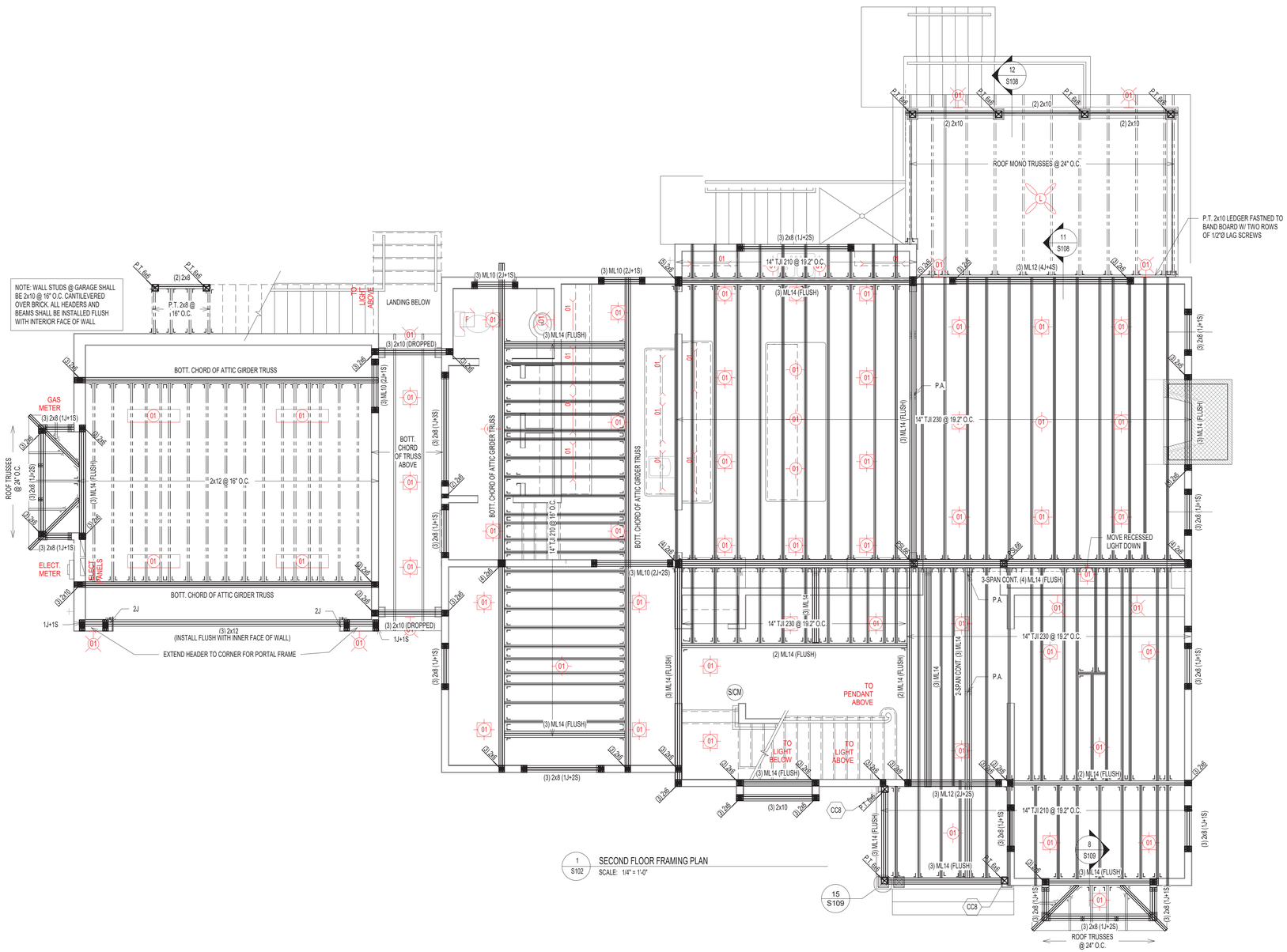

1 / S102 SECOND FLOOR FRAMING PLAN
SCALE: 1/4" = 1'-0"

15 / S109

APPROVED
Montgomery County
Historic Preservation Commission

REVIEWED
By Dan.Bruechert at 4:21 pm, Dec 18, 2023

NOTES:

1. FLOOR JOISTS SHALL BE SPACED @ 16" O.C. UNLESS NOTED OTHERWISE.
2. (J) INDICATED JACK STUDS & (S) INDICATES KING STUDS. EXAMPLE: 1J+1S = ONE JACK STUD & ONE KING STUD AT EACH END OF SPECIFIED HEADER.
3. FLOOR SHEATHING SHALL BE 3/4" APA RATED 3/4" T&G PLYWOOD WITH SPAN RATING OF 48/24 OR STURD-I-FLOOR WITH 24" O.C. GRADE.
4. WALL SHEATHING SHALL BE 7/16" APA RATED OSB/PLYWOOD CONTINUOUS SHEATHING W/ 8d NAILS @ 6" O.C.ON EDGES AND 12" O.C. IN-FIELD.
5. INSTALL BRIDGING BETWEEN JOISTS AT MID-SPAN OR AS REQUIRED PER MANUFACTURER BRIDGING BETWEEN JOISTS UNDER KITCHEN PLATFORMS AND CERAMIC TILE AREAS FOR MIN.THREE JOIST BAYS @ 8'-0" O.C. MAX.
6. FLOOR JOISTS SHALL HAVE 1/2" GYPSUM BOARD CEILING ATTACHED DIRECTLY TO UNDERSIDE OF BOTTOM FLANGE OF JOIST. NOTIFY ENGINEER OF ANY UNFINISHED AREAS.
7. ALL JOISTS ARE DESIGNED PER MIN. PRO RATING (BASED ON iLEVEL WEYERHAEUSER PRO RATING CRITERIA) CRITERIA OF 38. NOTIFY ENGINEER, IF HIGHER PRO RATING IS REQUIRED.
8. INSTALL SQUASH BLOCKS AT EVERY BEARING LOCATION AND PROVIDE SOLID BLOCKING UNDER EVERY BEARING WALL FROM ABOVE AT ALL I JOISTS.
9. PROVIDE JOISTS AT MAX. 16" O.C. SPACING UNDER CERAMIC TILE AREAS. JOIST MANUFACTURER TO DESIGN JOISTS FOR DEFLECTION LIMIT OF L/720 OR 0.3" MAX. COORDINATE LOCATION OF CERAMIC TILE AREAS WITH ARCHITECTURAL DRAWINGS.
10. PROVIDE DOUBLE JOISTS UNDER KITCHEN ISLANDS, OVERSIZED BATH TUBS.
11. WEB STIFFENERS ARE REQUIRED WHEN INTERMEDIATE BEARING LENGTH IS LESS THAN 5 1/4" AND SPAN ON EITHER SIDE OF BEARING IS LARGER THAN REQUIRED PER JOIST MANUFACTURER.
12. PROTECT ALL UNTREATED WOOD FROM DIRECT CONTACT WITH CONCRETE OR MASONRY.
13. PROVIDE SQUASH BLOCKS ON BOTH SIDES AT BEARING WALL LOCATIONS WITH ONE 10d NAILS AT EACH FLANGE.
14. PROVIDE BLOCKING PANELS PER MANUFACTURER'S SPECIFICATIONS, IF JOISTS ARE SUPPORTING SHEAR WALL FROM ABOVE.
15. PROVIDE SOLID BLOCKING BETWEEN JOISTS WHEN SUPPORTING BEARING WALL FROM ABOVE.
16. PROVIDE BACKER/FILLER BLOCKS AS RECOMMENDED BY JOIST MANUFACTURER AT CONNECTION LOCATIONS OR MULTIPLE JOISTS SUPPORTING POSTS FROM ABOVE.
17. DO NOT CUT HOLES OR NOTCHES WITHOUT PRIOR APPROVAL FROM ENGINEER OR JOIST MANUFACTURER.
18. PROVIDE SOLID BLOCKING OF SAME SIZE WITHIN FLOOR SYSTEM UNDER ALL JACK STUDS, KING STUDS & POSTS FROM ABOVE.
19. PROVIDE MIN. (2) 2x12 UP TO 4'-0" SPAN, (2) ML10 FOR 4'-0" TO 6'-0" SPAN, (2) ML12 6'-0" TO 9'-0" SPAN WHERE BEAM SIZES ARE NOT SPECIFIED ON PLANS. ANY SPANS LARGER THAN 9'-0" SUPPORITNG FRAMING AND NOT SPECIFIED ON PLANS SHALL BE NOTIFIED TO ENGINEER IMMEDIATELY.
20. PROVIDE MIN. DOUBLE JOISTS OR SPECIAL FLOOR TRUSS UNDER (2) 2x POSTS AND (2) PLY MICROLAM LVL OR SPECIAL FLOOR TRUSS TO MATCH FLOOR THIOKNESS UNDER (3) 2x POSTS UNLESS NOTED OTHERWISE ON THE PLAN. CONTRACTOR SHALL NOTIFY ENGINEER FOR SUPPORTING STRUCTURAL MEMBER FOR ALL OTHER POST SIZES COMING FROM ABOVE.
21. PROVIDE MIN. (3) 2x POST UNDER BEAMS UNLESS NOTED OTHERWISE.
22. ALL POSTS SHALL CONTINUE DOWN TO FOUNDATION OR STRUCTURAL MEMBER SUCH AS BEAM/GIRDER TRUSS BELOW.
23. PROVIDE MIN. 3 JACK STUDS + 2 KING STUDS AT ALL HEADERS UNLESS NOTED OTHERWISE.
24. ALL WALL STUDS SHALL SPF#2 AND SHALL BE SPACED AT MAX. 16" O.C. UNLESS NOTED OTHERWISE.
25. ALL TWO STORY HIGH WALLS SHALL BE (2) 2x6 SPF#2 BALLOON FRAMED UNLESS NOTED OTHERWISE.
26. PROVIDE FULL HEIGHT BLOCKING BETWEEN JOISTS UP TO THREE JOIST BAYS WHERE JOISTS ARE PARALLEL TO FOUNDATION WALL.

PLAN LEGENDS & SYMBOLS:

- INDICATES BEARING WALL
- INDICATES DRAIN HOLE FROM ABOVE
- INDICATES JOIST/TRUSS HANEGR (REFER TO SHOP DWGS)
- INDICATES FRAMING DIRECTION
- INDICATES REBAR DIRECTION
- (J+ S) — INDICATES NO. OF KING STUDS AT EACH END; INDICATES NO. OF JACK STUDS AT EACH END
- WF?? — INDICATES WALL FOOTING; WIDTH OF WALL FOOTING IN INCHES
- TS?? — INDICATES THICKENED SLAB; WIDTH OF THICKENED SLAB IN INCHES
- F.x.x — INDICATES ISOLATED COLUMN FOOTING; INDICATES SIZE OF FOOTING IN DECIMAL FEET
- ML?? — MICROLAM LVL 2.0E; DEPTH OF MICROLAM LVL IN INCHES
- LSL?? — LAMINATED STRAND LUMBER 1.7E; DEPTH OF TIMBERSTAND LSL BEAM IN INCHES
- PSL?? — PARALLAM STRAND LUMBER 2.0E; WIDTHxDEPTH OF MEMBER
- CC — COLUMN CAP
- CB — COLUMN BASE
- HD — HOLD DOWN ANCHOR
- MS — METAL STRAP
- H — JOIST/TRUSS/BEAM HANGER
- HC — HURRICANE CLIPS

MICROLAM LVL BEAM SCHEDULE

MARK	DESCRIPTION
(2) ML10	(2) 1 3/4" x 9 1/2" LVL - 1.9E
(2) ML12	(2) 1 3/4" x 11 7/8" LVL - 1.9E
(2) ML14	(2) 1 3/4" x 14" LVL - 1.9E
(3) ML10	(3) 1 3/4" x 9 1/2" LVL - 1.9E
(3) ML12	(3) 1 3/4" x 11 7/8" LVL - 1.9E
(3) ML14	(3) 1 3/4" x 14" LVL - 1.9E
(4) ML14	(4) 1 3/4" x 14" LVL - 1.9E

STEEL COLUMN SCHEDULE

MARK	DESCRIPTION
PIPE3-STD	3" Ø STANDARD STEEL PIPE COLUMN
PIPE4-STD	4"Ø STANDARD STEEL PIPE COLUMN
PIPE5-STD	5"Ø STANDARD STEEL PIPE COLUMN

GTM ARCHITECTS

7735 OLD GEORGETOWN ROAD
SUITE 700
BETHESDA, MD 20814
(240)333-2000
(240)333-2001 FAX
WWW.GTMARCHITECTS.COM

Seal

STATE OF MARYLAND — KAUSHAL KANSARA — 40082 — PROFESSIONAL ENGINEER

9/29/2023

DocuSigned by: Kaushal Kansara
2D67EAF8D063457...

Consultant

structBIM ENGINEERS
WE DESIGN....WE BIM
46400 BENEDICT DR, SUITE #211
PHONE: 703-657-4481
E-MAIL: info@structBIM.com

Project

3929 WASHINGTON ST,
KENSINGTON, MD

I certify that these documents were prepared or approved by me, and that I am a duly licensed Professional Engineer under the laws of the State of Maryland, license number 40082, Expiration Date: 02-13-2025.

Issue Description	*Date*

structBIM Project No.	23-0260
Checked By	KK
Drawn By	KK
Scale	1/4" = 1'-0"

Sheet Title
SECOND FLOOR
FRAMING PLAN

Sheet No.

S102

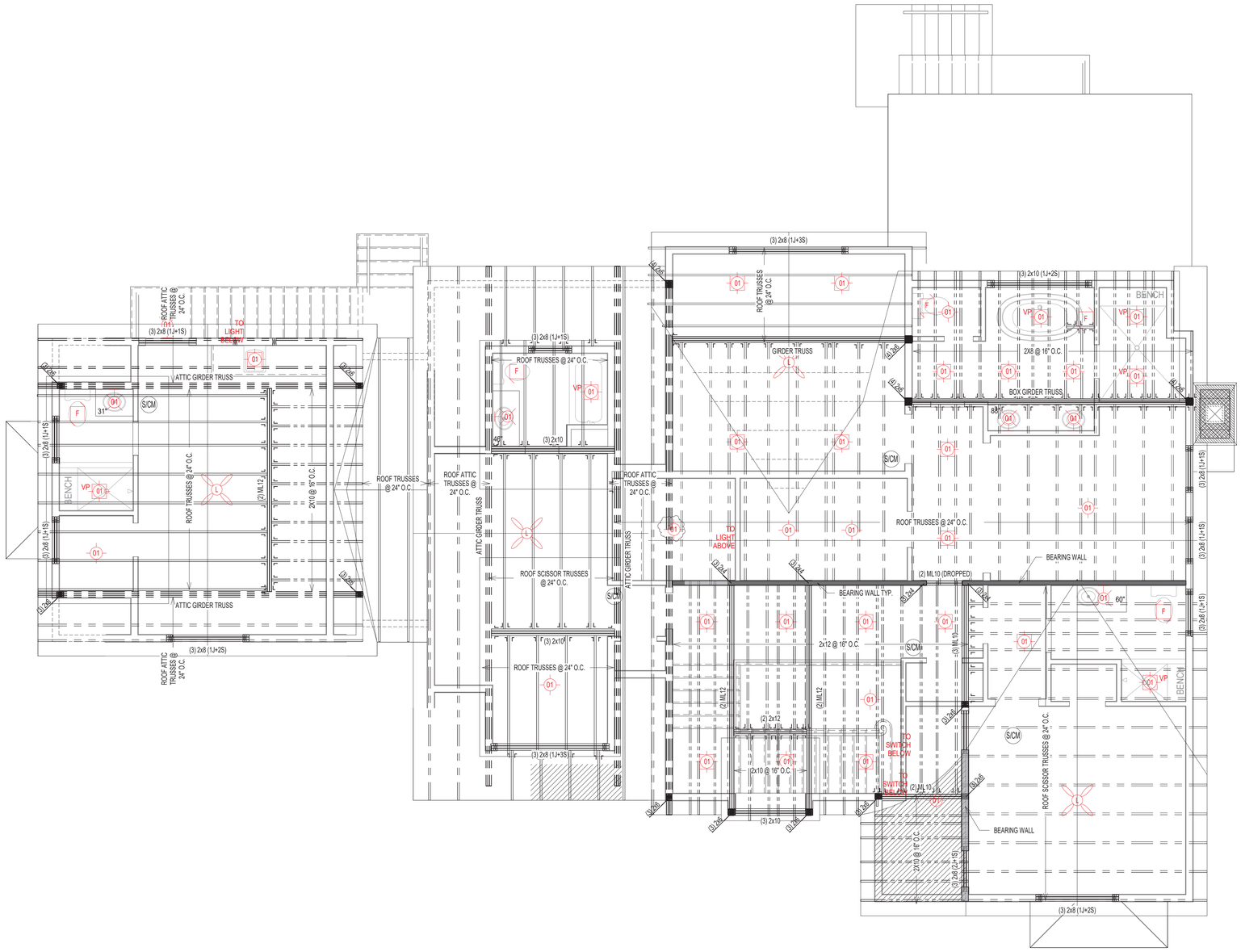

1 S103 LOFT FLOOR FRAMING PLAN
SCALE: 1/4" = 1'-0"

APPROVED
Montgomery County
Historic Preservation Commission

REVIEWED
By Dan.Bruechert at 4:20 pm, Dec 18, 2023

NOTES:

1. ALL TRUSSES SHALL BE PRE-FABRICATED ENGINEERED ROOF TRUSSES AND SHALL BE INSTALLED PER TRUSS MANUFACTURER'S LAYOUT AND DESIGN. SUBMIT SIGNED AND SEALED SHOP DRAWINGS FOR REVIEW.
2. ALL ROOF SHEATHING SHALL BE APA RATED 7/16" C-C, C-D OR STRUCTURAL II WITH SPAN RATING OF 48/24 PER "AMERICAN PLYWOOD ASSOCIATION". PROVIDE MIN. NAILING PATTERN W/ 8d COMMON NAILS @ 6" O.C. ON EDGES AND 12" O.C. IN FIELD. PROVIDE PLYWOOD CLIPS AT PLYWOOD EDGES BETWEEN EACH FRAMING MEMBER.
3. TRUSS LAYOUT SHOWN ON THESE DRAWINGS ARE FOR SCHEMATIC PURPOSES ONLY AND TO REFLECT DESIGN INTENT FOR OTHER FRAMING MEMBERS. THESE DRAWINGS SHALL NOT BE CONSIDERED AS SHOP DRAWINGS. TRUSS DESIGN DRAWINGS PREPARED BY TRUSS MANUFACTURER SHALL BE USED FOR TRUSS LAYOUT AND COORDINATION. NOTIFY ENGINEER IF VARIATION IS MADE IN TRUSS DESIGN DRAWINGS THAT AFFECTS ORIGINAL DESIGN INTENT.
4. COORDINATE ROOF SLOPES, VALLEYS, HEEL HEIGHTS WITH ARCHITECTURAL DRAWINGS.
5. INSTALL MINIMUM H2.5A HURRICANE CLIPS AT EACH TRUSS BEARING UNLESS SPECIFIED ON SHOP DRAWINGS.
6. AT ALL NON LOAD BEARING WALLS MAINTAIN 1/4" GAP BETWEEN BOTTOM OF TRUSS BOTTOM CHORD AND TOP OF TOP PLATE. INSTALL SIMPSON "STC" TRUSS CLIPS TO MAINTAIN GAP TO ALLOW TRUSS MOVEMENT.
7. ALL SECTIONS/DETAIL CUTS MARKED AS TYP. SHALL BE APPLIED AT ALL SIMILAR CONDITIONS ON ENTIRE PLAN.
8. TRUSS MANUFACTURER TO DESIGN NECESSARY TEMPORARY/PERMENANT BRACING AND SHALL SPECIFY ON SHOP DRAWINGS.
9. TRUSS MANUFACTURER TO SPECIFY NECESSARY CONNECTORS AND FASTENERS FOR ALL CONNECTIONS INCLUDING BUT NOT LIMITED TO UPLIFT CONNECTORS, HANGERS.
10. PROVIDE SOLID BLOCKING OF SAME SIZE WITHIN FLOOR SYSTEM UNDER ALL JACK STUDS, KING STUDS & POSTS FROM ABOVE.
11. PROVIDE MIN. (3) 2x POST UNDER ALL GIRDER TRUSSES UNLESS NOTED OTHERWISE.
12. PROVIDE MIN. TWO JACK STUDS + TWO KING STUDS AT ALL HEADERS UNLESS NOTED OTHERWISE.
13. ALL WALL STUDS SHALL BE SPF#2 OR EQ. APPROVED AND SPACED AT MAX. 16" O.C. UNLESS NOTED OTHERWISE.

PLAN LEGENDS & SYMBOLS:

- INDICATES BEARING WALL
- INDICATES DRAIN HOLE FROM ABOVE
- INDICATES JOIST/TRUSS HANEGR (REFER TO SHOP DWGS)
- INDICATES FRAMING DIRECTION
- INDICATES REBAR DIRECTION
- (J+_S) — INDICATES NO. OF KING STUDS AT EACH END; INDICATES NO. OF JACK STUDS AT EACH END
- WF?? — INDICATES WALL FOOTING; WIDTH OF WALL FOOTING IN INCHES
- TS?? — INDICATES THICKENED SLAB; WIDTH OF THICKENED SLAB IN INCHES
- Fx.x — INDICATES ISOLATED COLUMN FOOTING; INDICATES SIZE OF FOOTING IN DECIMAL FEET
- ML?? — MICROLAM LVL 2.0E; DEPTH OF MICROLAM LVL IN INCHES
- LSL?? — LAMINATED STRAND LUMBER 1.7E; DEPTH OF TIMBERSTAND LSL BEAM IN INCHES
- PSL?? — PARALLAM STRAND LUMBER 2.0E; WIDTHxDEPTH OF MEMBER
- CC — COLUMN CAP
- CB — COLUMN BASE
- HD — HOLD DOWN ANCHOR
- MS — METAL STRAP
- H — JOIST/TRUSS/BEAM HANGER
- HC — HURRICANE CLIPS

MICROLAM LVL BEAM SCHEDULE

MARK	DESCRIPTION
(2) ML10	(2) 1 3/4" x 9 1/2" LVL - 1.9E
(2) ML12	(2) 1 3/4" x 11 7/8" LVL - 1.9E
(2) ML14	(2) 1 3/4" x 14" LVL - 1.9E
(3) ML10	(3) 1 3/4" x 9 1/2" LVL - 1.9E
(3) ML12	(3) 1 3/4" x 11 7/8" LVL - 1.9E
(3) ML14	(3) 1 3/4" x 14" LVL - 1.9E
(4) ML14	(4) 1 3/4" x 14" LVL - 1.9E

STEEL COLUMN SCHEDULE

MARK	DESCRIPTION
PIPE3-STD	3" Ø STANDARD STEEL PIPE COLUMN
PIPE4-STD	4"Ø STANDARD STEEL PIPE COLUMN
PIPE5-STD	5"Ø STANDARD STEEL PIPE COLUMN

GTM ARCHITECTS

7735 OLD GEORGETOWN ROAD
SUITE 700
BETHESDA, MD 20814
(240)333-2000
(240)333-2001 FAX
WWW.GTMARCHITECTS.COM

GTM

Seal

STATE OF MARYLAND — KAUSHAL KANSARA — 40082 — MASTER STRUCTURAL ENGINEER

9/29/2023 — DocuSigned by: Kaushal Kansara — 2D576AFB0063457...

Consultant

structBIM ENGINEERS
WE DESIGN....WE BIM
46400 BENEDICT DR, SUITE #211
PHONE: 703-657-4481
E-MAIL: info@structBIM.com

Project

3929 WASHINGTON ST,
KENSINGTON, MD

I certify that these documents were prepared or approved by me, and that I am a duly licensed Professional Engineer under the laws of the State of Maryland, license number 40082, Expiration Date: 02-13-2025.

Issue Description	*Date*

structBIM Project No.	23-0260
Checked By	KK
Drawn By	KK
Scale	1/4" = 1'-0"

Sheet Title

ROOF FRAMING PLAN

Sheet No.

S103

PLOTTED ON: 9/29/2023 10:18:01 AM

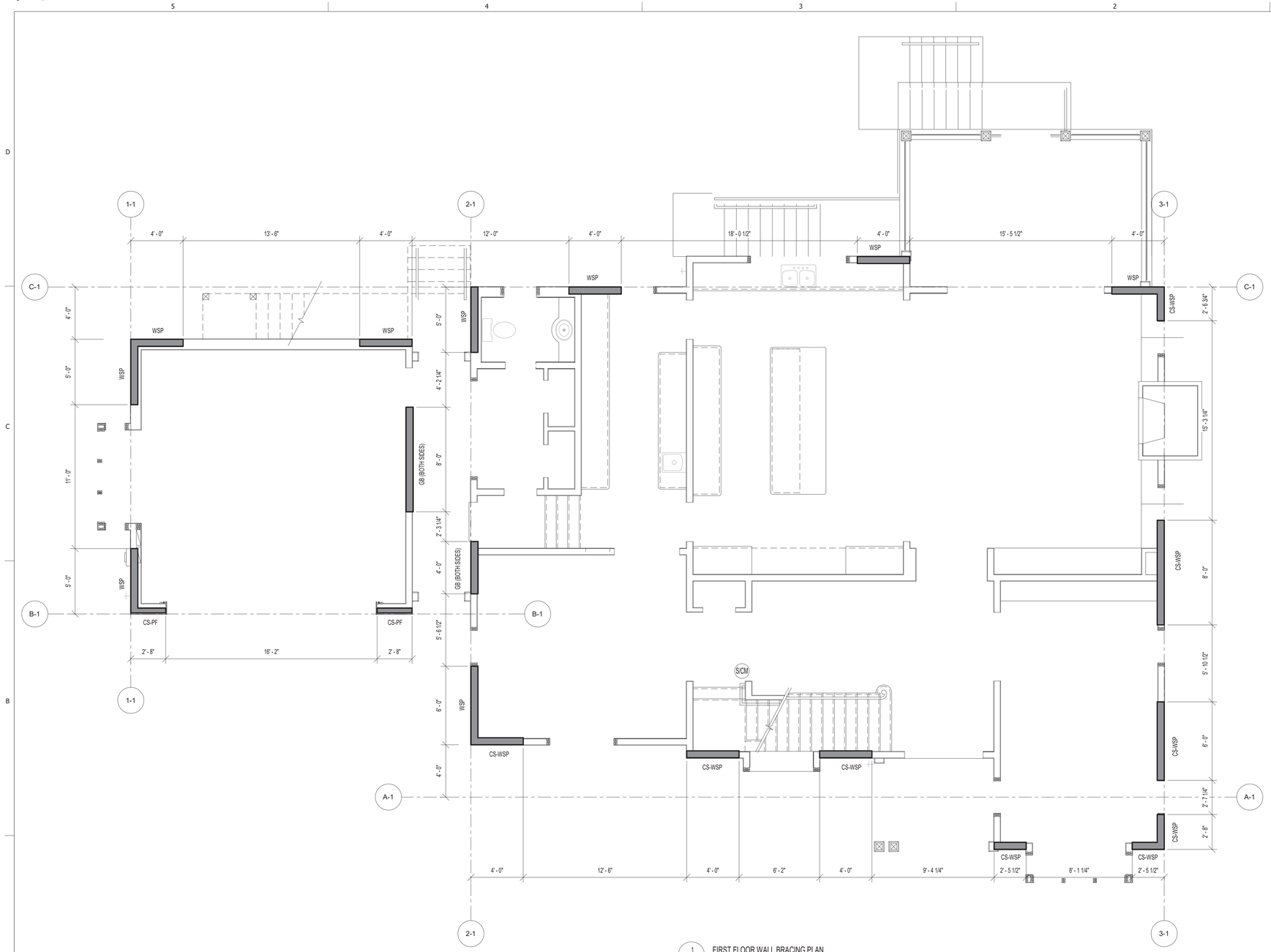

1 / S104 FIRST FLOOR WALL BRACING PLAN
SCALE: 1/4" = 1'-0"

PLAN LEGENDS & SYMBOLS:

- INDICATES BEARING WALL
- INDICATES DRAIN HOLE FROM ABOVE
- INDICATES JOIST/TRUSS HANEGR (REFER TO SHOP DWGS)
- INDICATES FRAMING DIRECTION
- INDICATES REBAR DIRECTION
- (_J+_S) — INDICATES NO. OF KING STUDS AT EACH END; INDICATES NO. OF JACK STUDS AT EACH END
- WF?? — INDICATES WALL FOOTING; WIDTH OF WALL FOOTING IN INCHES
- TS?? — INDICATES THICKENED SLAB; WIDTH OF THICKENED SLAB IN INCHES
- Fx.x — INDICATES ISOLATED COLUMN FOOTING; INDICATES SIZE OF FOOTING IN DECIMAL FEET
- ML?? — MICROLAM LVL 2.0E; DEPTH OF MICROLAM LVL IN INCHES
- LSL?? — LAMINATED STRAND LUMBER 1.7E; DEPTH OF TIMBERSTAND LSL BEAM IN INCHES
- PSL?? — PARALLAM STRAND LUMBER 2.0E; WIDTH:DEPTH OF MEMBER
- CC — COLUMN CAP
- CB — COLUMN BASE
- HD — HOLD DOWN ANCHOR
- MS — METAL STRAP
- H — JOIST/TRUSS/BEAM HANGER
- HC — HURRICANE CLIPS

WALL BRACING/SHEAR WALL SCHEDULE

MARK	DESCRIPTION	FASTENING PATTERN
CS-PF	7/16" APA RATED OSB SHEATHING	8d COMMON NAILS (2 1/2" x 0.131") @ 6" O.C. ON EDGES & 12" O.C. IN-FIELD
CS-WSP	7/16" APA RATED OSB SHEATHING	8d COMMON NAILS (2 1/2" x 0.131") @ 6" O.C. ON EDGES & 12" O.C. IN-FIELD
GB (BOTH SIDES)	1/2" GYPSUM WALL BOARD SHEATHING	1 1/2 " GALVANIZED ROOFING NAILS OR 1 1/2" GALVANIZED STAPLES OR 1 1/4" SCREWS TYPE W OR S @ 7" O.C. ON EDGES & IN-FIELD
GB (ONE SIDE)	1/2" GYPSUM WALL BOARD SHEATHING	1 1/2 " GALVANIZED ROOFING NAILS OR 1 1/2" GALVANIZED STAPLES OR 1 1/4" SCREWS TYPE W OR S @ 7" O.C. ON EDGES & IN-FIELD
WSP	7/16" APA RATED OSB SHEATHING	8d COMMON NAILS (2 1/2" x 0.131") @ 6" O.C. ON EDGES & 12" O.C. IN-FIELD

APPROVED
Montgomery County
Historic Preservation Commission

REVIEWED
By Dan.Bruechert at 4:21 pm, Dec 18, 2023

FILE NAME:

GTM ARCHITECTS
7735 OLD GEORGETOWN ROAD
SUITE 700
BETHESDA, MD 20814
(240)333-2000
(240)333-2001 FAX
WWW.GTMARCHITECTS.COM

Seal

STATE OF MARYLAND — KAUSHAL KANSARA — 40082 — PROFESSIONAL ENGINEER
9/29/2023
DocuSigned by: Kaushal Kansara
2D576AF8D083457...

Consultant

structBIM ENGINEERS
WE DESIGN....WE BIM
46400 BENEDICT DR, SUITE #211
PHONE: 703-657-4481
E-MAIL: info@structBIM.com

Project

3929 WASHINGTON ST,
KENSINGTON, MD

I certify that these documents were prepared or approved by me, and that I am a duly licensed Professional Engineer under the laws of the State of Maryland, license number 40082. Expiration Date: 02-13-2025.

Issue Description	*Date*

structBIM Project No.	23-0260
Checked By	KK
Drawn By	KK
Scale	1/4" = 1'-0"

Sheet Title
FIRST FLOOR WALL BRACING PLAN

Sheet No.
S104

PLOTTED ON: 9/29/2023 10:16:04 AM

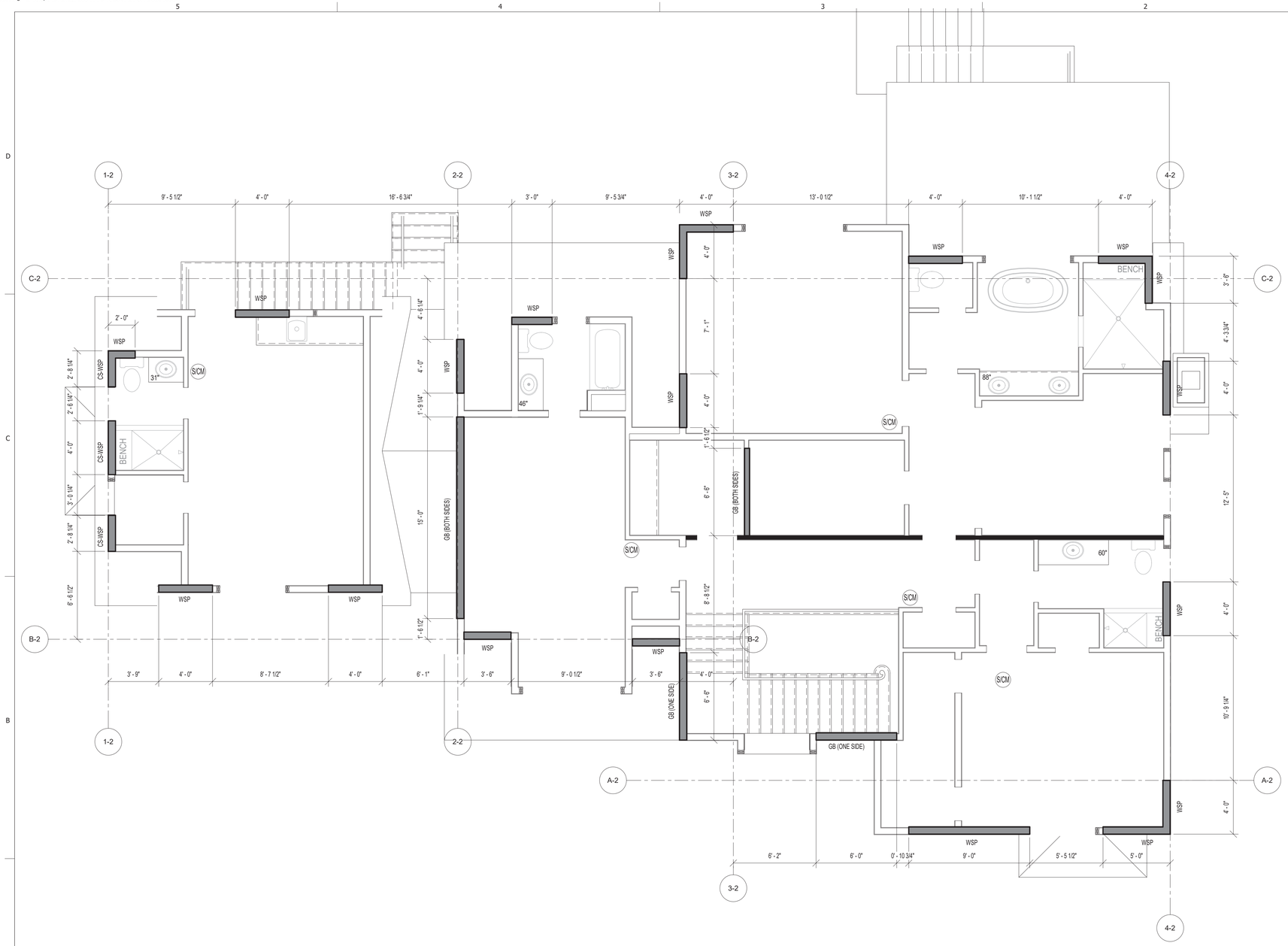

1 / S105 SECOND FLOOR WALL BRACING PLAN

SCALE: 1/4" = 1'-0"

PLAN LEGENDS & SYMBOLS:

- INDICATES BEARING WALL
- INDICATES DRAIN HOLE FROM ABOVE
- INDICATES JOIST/TRUSS HANEGR (REFER TO SHOP DWGS)
- INDICATES FRAMING DIRECTION
- INDICATES REBAR DIRECTION
- (_J+_S) — INDICATES NO. OF KING STUDS AT EACH END; INDICATES NO. OF JACK STUDS AT EACH END
- WF?? — INDICATES WALL FOOTING; WIDTH OF WALL FOOTING IN INCHES
- TS?? — INDICATES THICKENED SLAB; WIDTH OF THICKENED SLAB IN INCHES
- Fx.x — INDICATES ISOLATED COLUMN FOOTING; INDICATES SIZE OF FOOTING IN DECIMAL FEET
- MLI?? — MICROLAM LVL 2.0E; DEPTH OF MICROLAM LVL IN INCHES
- LSL?? — LAMINATED STRAND LUMBER 1.7E; DEPTH OF TIMBERSTAND LSL BEAM IN INCHES
- PSL?? — PARALLAM STRAND LUMBER 2.0E; WIDTHxDEPTH OF MEMBER
- CC — COLUMN CAP
- CB — COLUMN BASE
- HD — HOLD DOWN ANCHOR
- MS — METAL STRAP
- H — JOIST/TRUSS/BEAM HANGER
- HC — HURRICANE CLIPS

WALL BRACING/SHEAR WALL SCHEDULE

MARK	DESCRIPTION	FASTENING PATTERN
CS-PF	7/16" APA RATED OSB SHEATHING	8d COMMON NAILS (2 1/2" x 0.131") @ 6" O.C. ON EDGES & 12" O.C. IN-FIELD
CS-WSP	7/16" APA RATED OSB SHEATHING	8d COMMON NAILS (2 1/2" x 0.131") @ 6" O.C. ON EDGES & 12" O.C. IN-FIELD
GB (BOTH SIDES)	1/2" GYPSUM WALL BOARD SHEATHING	1 1/2 " GALVANIZED ROOFING NAILS OR 1 1/2" GALVANIZED STAPLES OR 1 1/4" SCREWS TYPE W OR S @ 7" O.C. ON EDGES & IN-FIELD
GB (ONE SIDE)	1/2" GYPSUM WALL BOARD SHEATHING	1 1/2 " GALVANIZED ROOFING NAILS OR 1 1/2" GALVANIZED STAPLES OR 1 1/4" SCREWS TYPE W OR S @ 7" O.C. ON EDGES & IN-FIELD
WSP	7/16" APA RATED OSB SHEATHING	8d COMMON NAILS (2 1/2" x 0.131") @ 6" O.C. ON EDGES & 12" O.C. IN-FIELD

APPROVED
Montgomery County
Historic Preservation Commission

REVIEWED
By Dan.Bruechert at 4:21 pm, Dec 18, 2023

FILE NAME:

GTM ARCHITECTS

7735 OLD GEORGETOWN ROAD
SUITE 700
BETHESDA, MD 20814
(240)333-2000
(240)333-2001 FAX
WWW.GTMARCHITECTS.COM

GTM

Seal

STATE OF MARYLAND — KAUSHAL KANSARA — 40082 — PROFESSIONAL ENGINEER

9/29/2023 — DocuSigned by: Kaushal Kansara — 2D576AF8D063457...

Consultant

structBIM ENGINEERS
WE DESIGN....WE BIM
46400 BENEDICT DR, SUITE #211
PHONE: 703-657-4481
E-MAIL: info@structBIM.com

Project

3929 WASHINGTON ST,
KENSINGTON, MD

I certify that these documents were prepared or approved by me, and that I am a duly licensed Professional Engineer under the laws of the State of Maryland, license number 40082, Expiration Date: 02-13-2025.

Issue Description	*Date*

structBIM Project No.	23-0260
Checked By	KK
Drawn By	KK
Scale	1/4" = 1'-0"

Sheet Title
SECOND FLOOR WALL BRACING PLAN

Sheet No.

S105

PLOTTED ON: 9/29/2023 10:16:08 AM

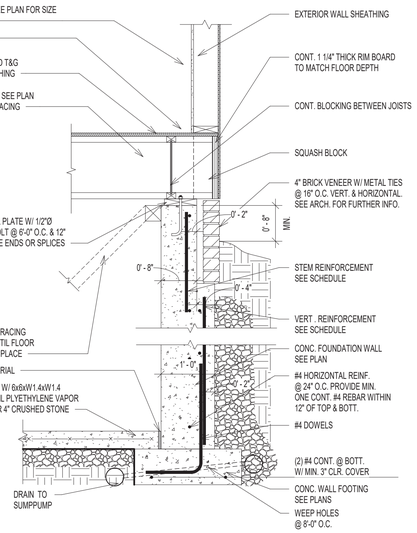

12 S106 FNDN_BSMT_CONC_12_02_I-JOISTS-PARALLEL
SCALE: 3/4" = 1'-0"

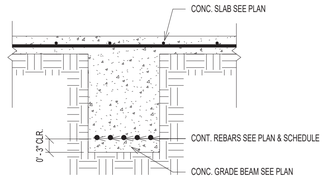

9 S106 TYP. GRADE BEAM DETAIL
SCALE: 3/4" = 1'-0"

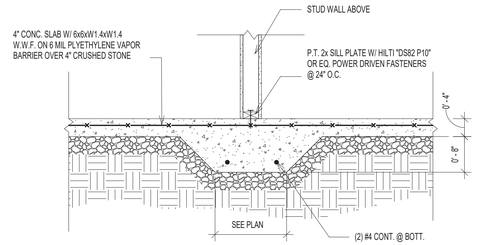

5 S106 INT. WALL THICKENED SLAB
SCALE: 3/4" = 1'-0"

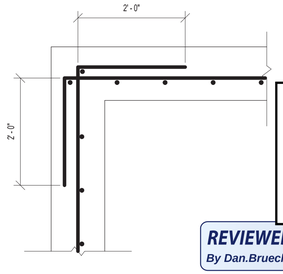

TYP. CORNER REINFORCEMENT DETAIL (PLAN VIEW)

APPROVED
Montgomery County
Historic Preservation Commission

REVIEWED
By Dan.Bruechert at 10:18 am, Dec 19, 2023

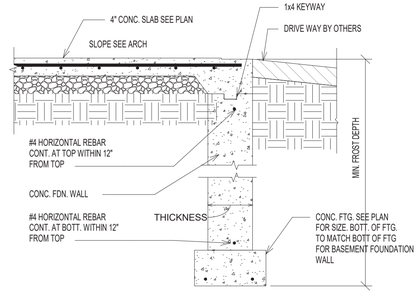

6 S106 FOUNDATION WALL @ GARAGE ENTRY
SCALE: 3/4" = 1'-0"

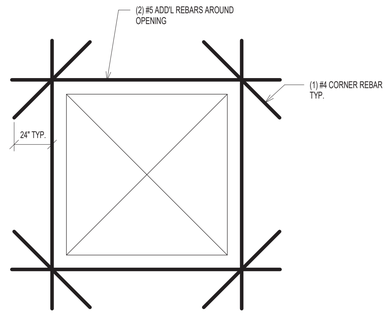

TYP. REINFORCEMENT AROUND OEPNING(ELEVATION VIEW)

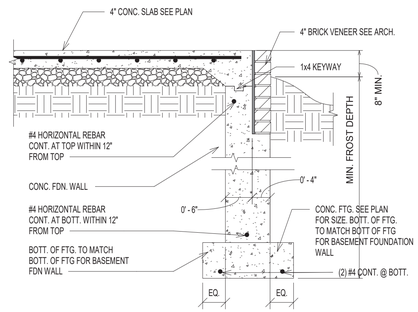

13 S106 SD0_12_FNDN_CONC_PORCH1
SCALE: 3/4" = 1'-0"

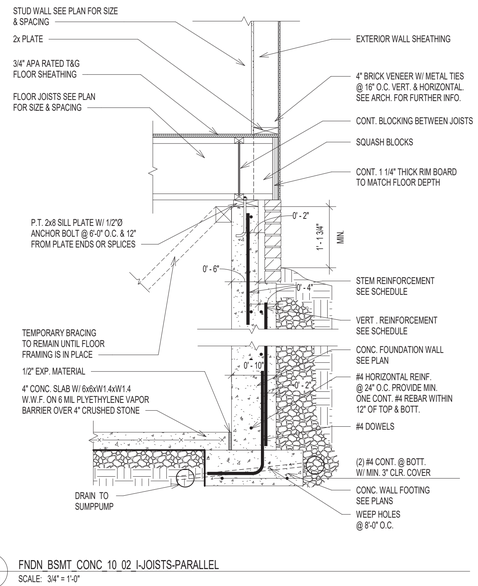

10 S106 FNDN_BSMT_CONC_10_02_I-JOISTS-PARALLEL
SCALE: 3/4" = 1'-0"

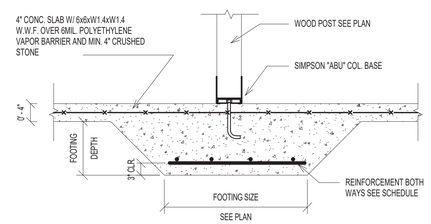

7 S106 TYPICAL WOOD COLUMN FOOTING
SCALE: 3/4" = 1'-0"

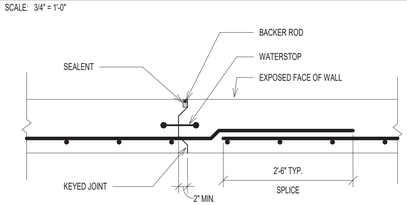

NOTE: PROVIDE CONSTRUCTION OR CONTROL JOINTS IN FOUNDATION WALLS AT EVERY 40'-0" TYPICAL.

1 S106 TYP. REINFORCEMENT AT WALL CORNER & OPENING
SCALE: 3/4" = 1'-0"

2 S106 TYP CONTROL JOINT @ FOUNDATION WALL
SCALE: 3/4" = 1'-0"

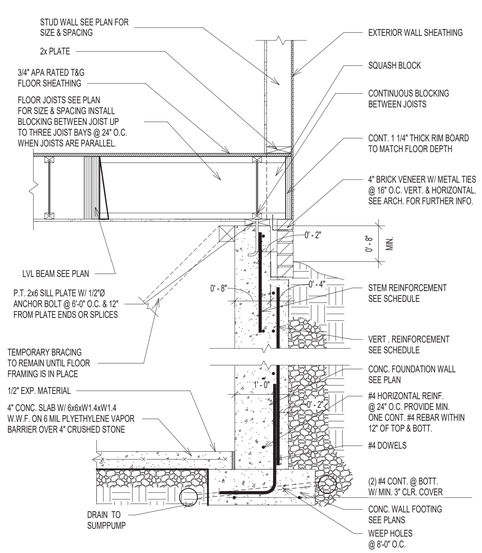

14 S106 FNDN_BSMT_CONC_12_02_I-JOISTS-PERPENDICULAR
SCALE: 3/4" = 1'-0"

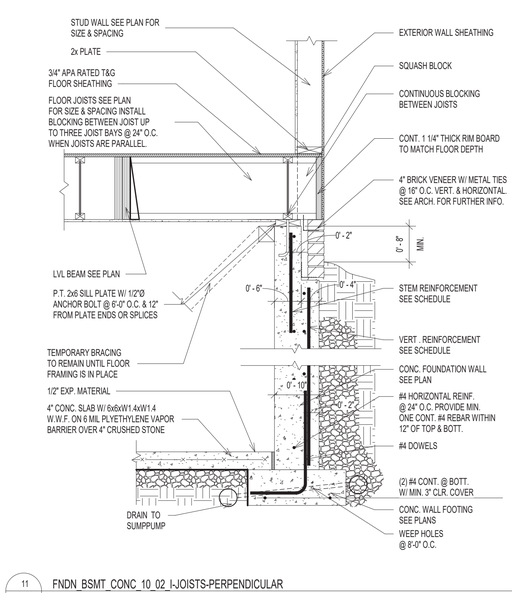

11 S106 FNDN_BSMT_CONC_10_02_I-JOISTS-PERPENDICULAR
SCALE: 3/4" = 1'-0"

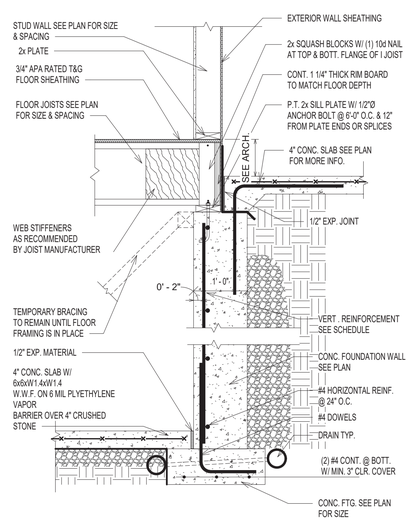

8 S106 TYP. FOUNDATION WALL SECTION @ PORCH
SCALE: 3/4" = 1'-0"

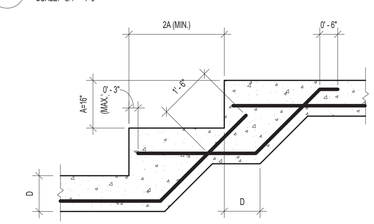

NOTE: SEE PLAN FOR REINFORCING AND OTHER INFO.

3 S106 TYP. STEPPED FOOTING DETAIL
SCALE: 1/2" = 1'-0"

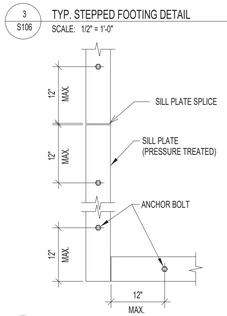

NOTES:

1. MINIMUM SILL BOLTING TO CONCRETE SHALL BE 1/2"Ø ANCHOR BOLTS, OR EQUAL, AT 6'-0" O.C. WITH 7" MINIMUM EMBEDMENT.

2. ALL ANCHORS FOR SILL PLATES SUPPORTING SHEAR WALLS (SW) SHALL HAVE MIN. 3"x3" STEEL WASHERS AND SHALL EXTEND A MINIMUM OF 2" ABOVE TOP OF SILL.

3. PROVIDE MINIMUM (2) BOLTS PER PIECE.

4. SEE OTHER DETAILS FOR USE OF MUDSILL ANCHORS IN LIEU OF ANCHOR BOLTS.

4 S106 TYP. SILL PLATE ANCHORAGE
SCALE: 3/4" = 1'-0"

GTM ARCHITECTS
7735 OLD GEORGETOWN ROAD
SUITE 700
BETHESDA, MD 20814
(240)333-2000
(240)333-2001 FAX
WWW.GTMARCHITECTS.COM

Seal

9/29/2023

DocuSigned by: Kaushal Kansara
2D576AEF8D063457...

Consultant

structBIM ENGINEERS
WE DESIGN....WE BIM
46400 BENEDICT DR, SUITE #211
PHONE: 703-657-4481
E-MAIL: info@structBIM.com

Project

3929 WASHINGTON ST, KENSINGTON, MD

I certify that these documents were prepared or approved by me, and that I am a duly licensed Professional Engineer under the laws of the State of Maryland, license number 40082, Expiration Date: 02-13-2025.

Issue Description	Date

structBIM Project No.	23-0260
Checked By	KK
Drawn By	KK
Scale	As indicated

Sheet Title
FOUNDATION DETAILS

Sheet No.
S106

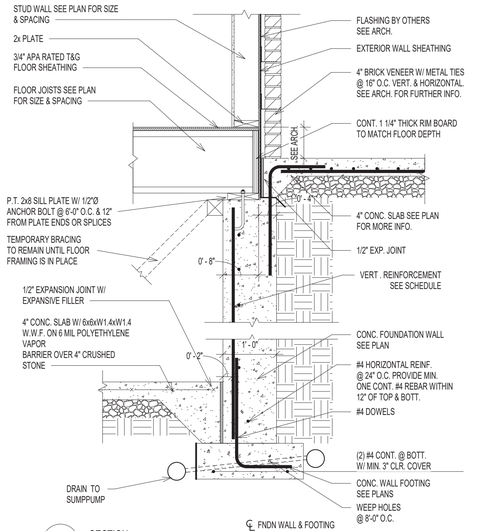

9 S107 SECTION
SCALE: 3/4" = 1'-0"

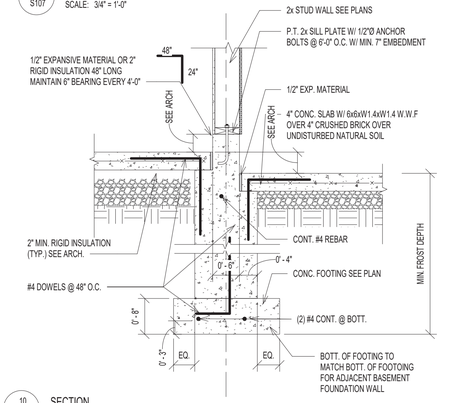

10 S107 SECTION
SCALE: 3/4" = 1'-0"

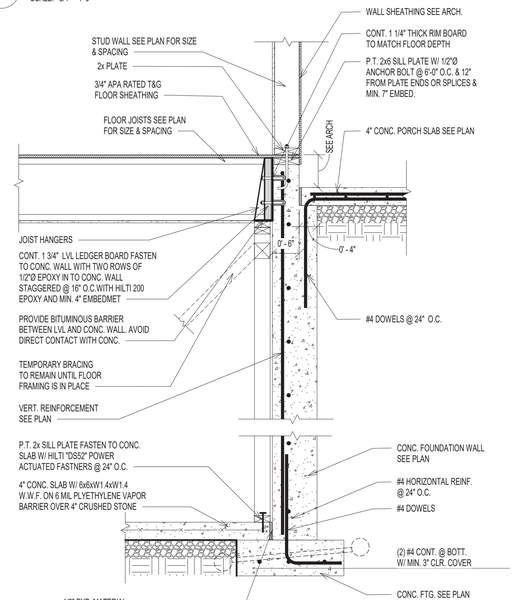

11 S107 SECTION
SCALE: 3/4" = 1'-0"

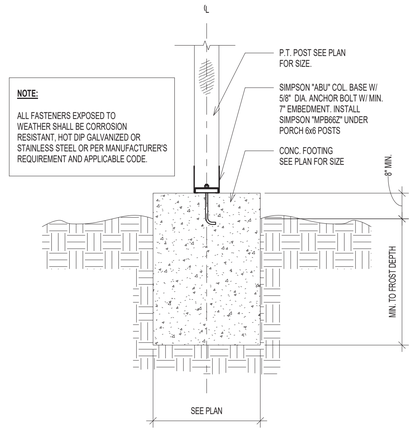

NOTE:

ALL FASTENERS EXPOSED TO WEATHER SHALL BE CORROSION RESISTANT, HOT DIP GALVANIZED OR STAINLESS STEEL OR PER MANUFACTURER'S REQUIREMENT AND APPLICABLE CODE.

COLUMN SIZE	COL. BASE	ANCHORAGE TO FTG.	FASTENERS TO POST
4x4	ABU44	(1) 5/8" DIA.	12-16d
6x6	ABU66	(1) 5/8" DIA.	12-16d
8x8	ABU88	(2) 5/8" DIA.	18-16d

NOTE: REFER TO MANUFACTURER'S MANUAL FOR INSTALLATION AND FASTENERS GUIDELINE. THIS DETAIL AND TABLE ARE FOR REFERENCE ONLY. NOTIFY ENGINEER, IF ANY COORDINATION REQUIRED PER ACTUAL CONDITION DURING INSTALLATION.

7 S107 DECK POST TO FTG
SCALE: 3/4" = 1'-0"

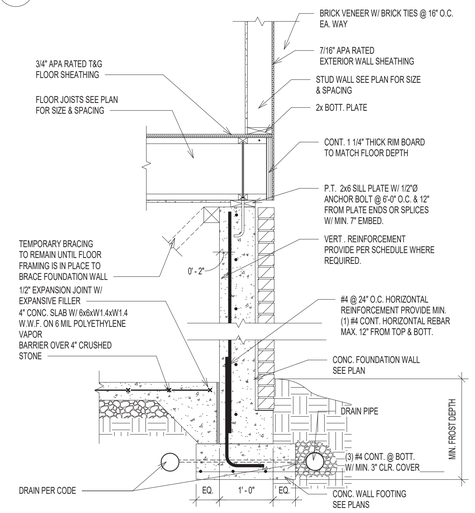

8 S107 SECTION
SCALE: 3/4" = 1'-0"

APPROVED
Montgomery County
Historic Preservation Commission

REVIEWED
By Dan.Bruechert at 4:22 pm, Dec 18, 2023

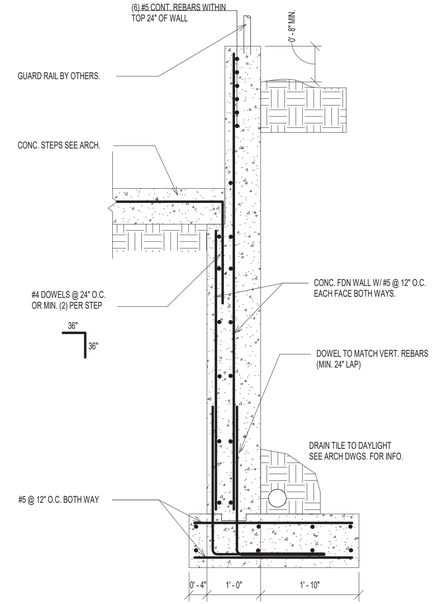

4 S107 TYP. AREA WAY DETAIL
SCALE: 3/4" = 1'-0"

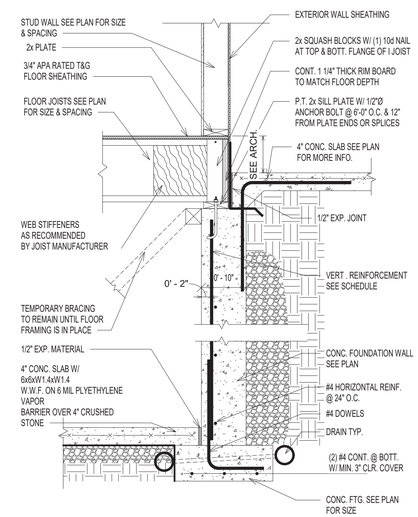

5 S107 TYP. FOUNDATION WALL SECTION @ PORCH
SCALE: 3/4" = 1'-0"

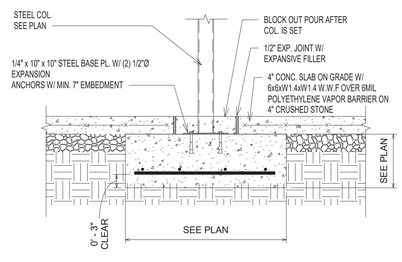

6 S107 DECK POST TO FTG
SCALE: 3/4" = 1'-0"

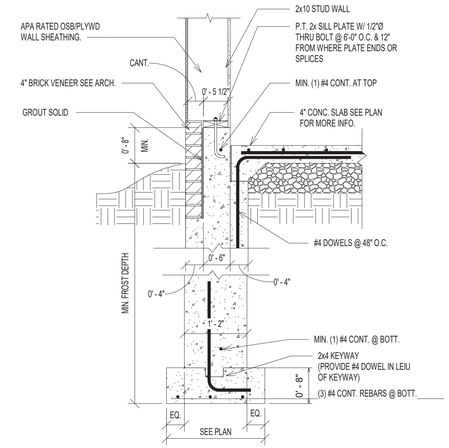

1 S107 GARAGE EXTERIOR WALL W/ BRICK VENEER
SCALE: 3/4" = 1'-0"

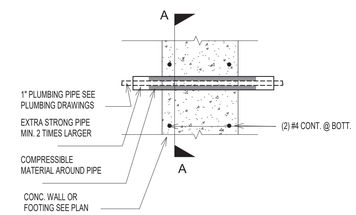

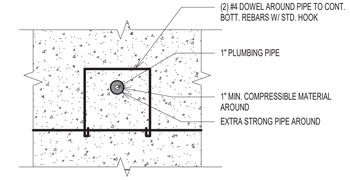

SECTION A-A

NOTE: TYPICAL DETAIL ONLY. OTHER INFORMATION OR SPECIAL CONDITONS NOT SHOWN

2 S107 TYP. SLEEVE DETAIL THRU FOOTING
SCALE: 3/4" = 1'-0"

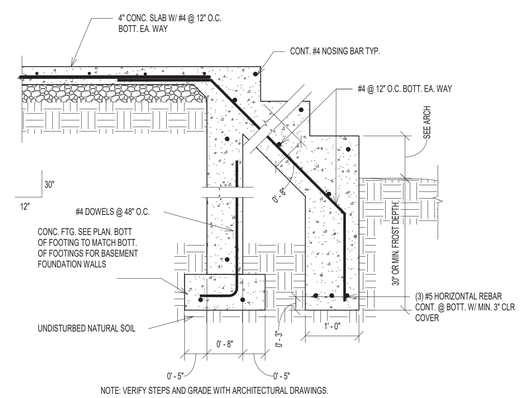

NOTE: VERIFY STEPS AND GRADE WITH ARCHITECTURAL DRAWINGS.

3 S107 STEPS @ PORCH
SCALE: 3/4" = 1'-0"

GTM ARCHITECTS

7735 OLD GEORGETOWN ROAD
SUITE 700
BETHESDA, MD 20814
(240)333-2000
(240)333-2001 FAX
WWW.GTMARCHITECTS.COM

Seal

STATE OF MARYLAND · KAUSHAL KANSARA · 40082 · PROFESSIONAL ENGINEER

9/29/2023

DocuSigned by: Kaushal Kansara
2D576AF8D063457...

Consultant

structBIM ENGINEERS
WE DESIGN....WE BIM
46400 BENEDICT DR, SUITE #211
PHONE: 703-657-4481
E-MAIL: info@structBIM.com

Project

3929 WASHINGTON ST, KENSINGTON, MD

I certify that these documents were prepared or approved by me, and that I am a duly licensed Professional Engineer under the laws of the State of Maryland, license number 40082, Expiration Date: 02-13-2025.

Issue Description	*Date*

structBIM Project No.	23-0260
Checked By	KK
Drawn By	KK
Scale	3/4" = 1'-0"

Sheet Title

FOUNDATION DETAILS

Sheet No.

S107

PLOTTED ON: 9/29/2023 10:10:23 AM

FILE NAME:

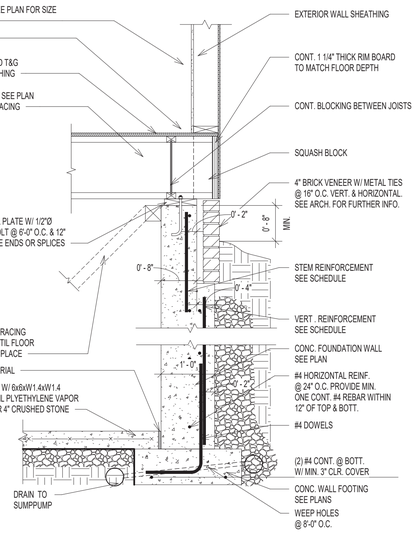

12 S106 FNDN_BSMT_CONC_12_02_I-JOISTS-PARALLEL
SCALE: 3/4" = 1'-0"

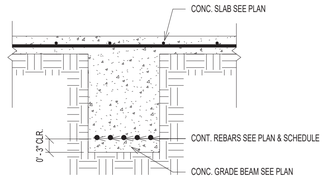

9 S106 TYP. GRADE BEAM DETAIL
SCALE: 3/4" = 1'-0"

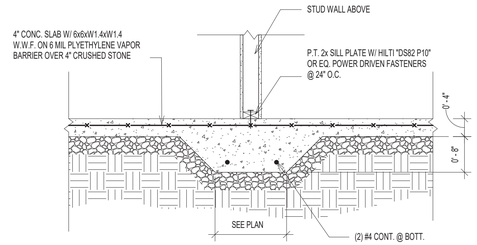

5 S106 INT. WALL THICKENED SLAB
SCALE: 3/4" = 1'-0"

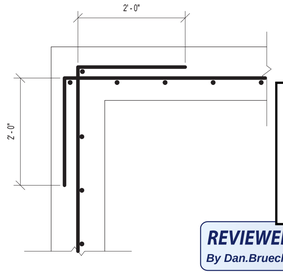

TYP. CORNER REINFORCEMENT DETAIL (PLAN VIEW)

APPROVED
Montgomery County
Historic Preservation Commission

REVIEWED
By Dan.Bruechert at 10:18 am, Dec 19, 2023

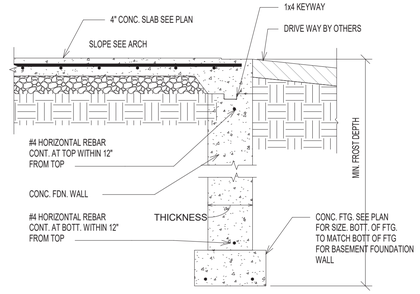

6 S106 FOUNDATION WALL @ GARAGE ENTRY
SCALE: 3/4" = 1'-0"

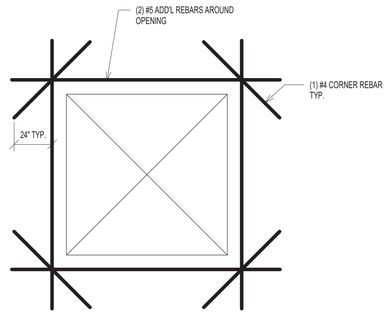

TYP. REINFORCEMENT AROUND OEPNING(ELEVATION VIEW)

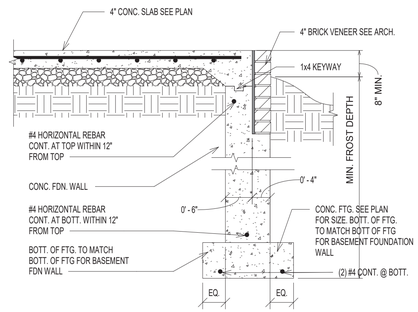

13 S106 SD0_12_FNDN_CONC_PORCH1
SCALE: 3/4" = 1'-0"

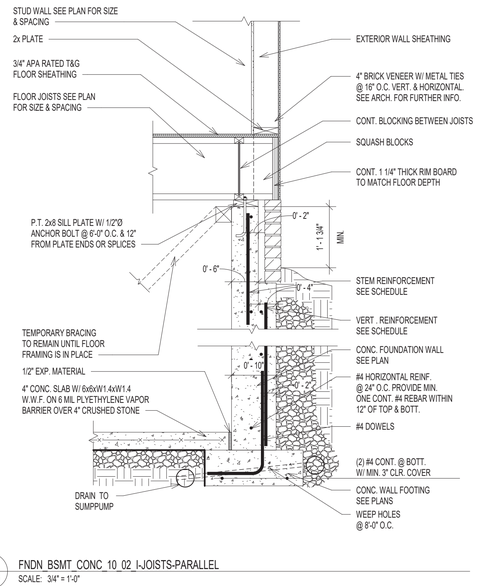

10 S106 FNDN_BSMT_CONC_10_02_I-JOISTS-PARALLEL
SCALE: 3/4" = 1'-0"

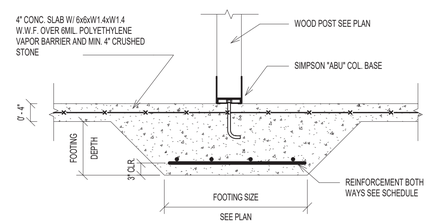

7 S106 TYPICAL WOOD COLUMN FOOTING
SCALE: 3/4" = 1'-0"

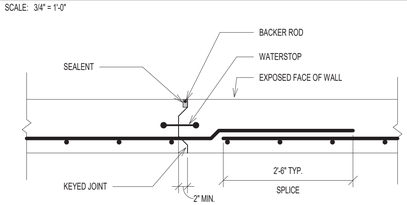

NOTE: PROVIDE CONSTRUCTION OR CONTROL JOINTS IN FOUNDATION WALLS AT EVERY 40'-0" TYPICAL.

1 S106 TYP. REINFORCEMENT AT WALL CORNER & OPENING
SCALE: 3/4" = 1'-0"

2 S106 TYP CONTROL JOINT @ FOUNDATION WALL
SCALE: 3/4" = 1'-0"

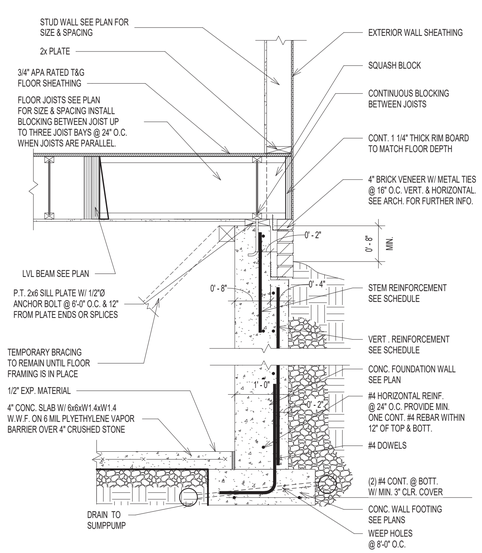

14 S106 FNDN_BSMT_CONC_12_02_I-JOISTS-PERPENDICULAR
SCALE: 3/4" = 1'-0"

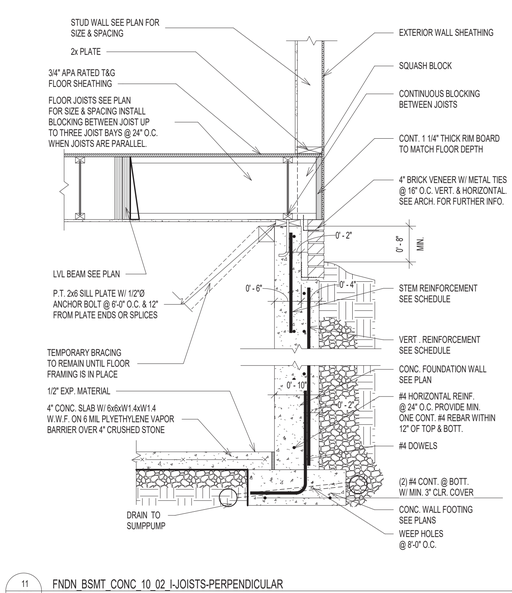

11 S106 FNDN_BSMT_CONC_10_02_I-JOISTS-PERPENDICULAR
SCALE: 3/4" = 1'-0"

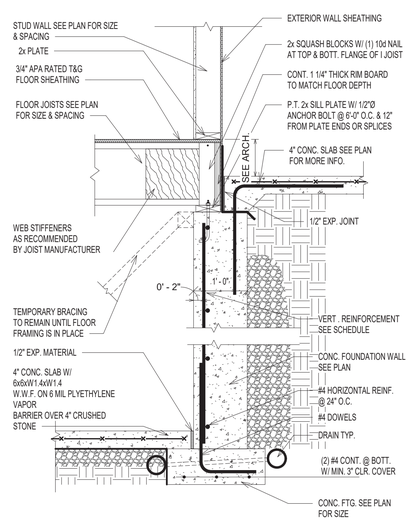

8 S106 TYP. FOUNDATION WALL SECTION @ PORCH
SCALE: 3/4" = 1'-0"

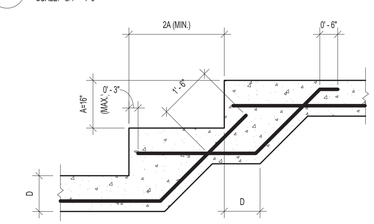

NOTE: SEE PLAN FOR REINFORCING AND OTHER INFO.

3 S106 TYP. STEPPED FOOTING DETAIL
SCALE: 1/2" = 1'-0"

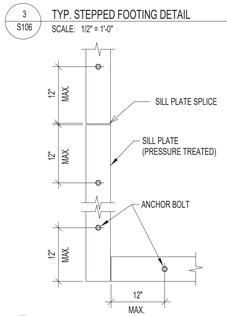

NOTES:

1. MINIMUM SILL BOLTING TO CONCRETE SHALL BE 1/2"Ø ANCHOR BOLTS, OR EQUAL, AT 6'-0" O.C. WITH 7" MINIMUM EMBEDMENT.

2. ALL ANCHORS FOR SILL PLATES SUPPORTING SHEAR WALLS (SW) SHALL HAVE MIN. 3"x3" STEEL WASHERS AND SHALL EXTEND A MINIMUM OF 2" ABOVE TOP OF SILL.

3. PROVIDE MINIMUM (2) BOLTS PER PIECE.

4. SEE OTHER DETAILS FOR USE OF MUDSILL ANCHORS IN LIEU OF ANCHOR BOLTS.

4 S106 TYP. SILL PLATE ANCHORAGE
SCALE: 3/4" = 1'-0"

GTM ARCHITECTS
7735 OLD GEORGETOWN ROAD
SUITE 700
BETHESDA, MD 20814
(240)333-2000
(240)333-2001 FAX
WWW.GTMARCHITECTS.COM

Seal

9/29/2023

DocuSigned by: Kaushal Kansara
2D576AEF8D063457...

Consultant

structBIM ENGINEERS
WE DESIGN....WE BIM
46400 BENEDICT DR, SUITE #211
PHONE: 703-657-4481
E-MAIL: info@structBIM.com

Project

3929 WASHINGTON ST, KENSINGTON, MD

I certify that these documents were prepared or approved by me, and that I am a duly licensed Professional Engineer under the laws of the State of Maryland, license number 40082, Expiration Date: 02-13-2025.

Issue Description	Date

structBIM Project No.	23-0260
Checked By	KK
Drawn By	KK
Scale	As indicated

Sheet Title
FOUNDATION DETAILS

Sheet No.
S106

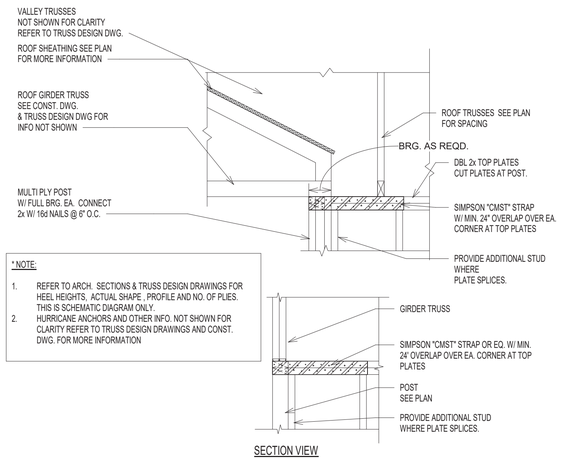

* NOTE:

1. REFER TO ARCH. SECTIONS & TRUSS DESIGN DRAWINGS FOR HEEL HEIGHTS, ACTUAL SHAPE , PROFILE AND NO. OF PLIES. THIS IS SCHEMATIC DIAGRAM ONLY.
2. HURRICANE ANCHORS AND OTHER INFO. NOT SHOWN FOR CLARITY REFER TO TRUSS DESIGN DRAWINGS AND CONST. DWG. FOR MORE INFORMATION

10 / S108 G.T. W/ FULL BRG ON POST @ CORNER
SCALE: 3/4" = 1'-0"

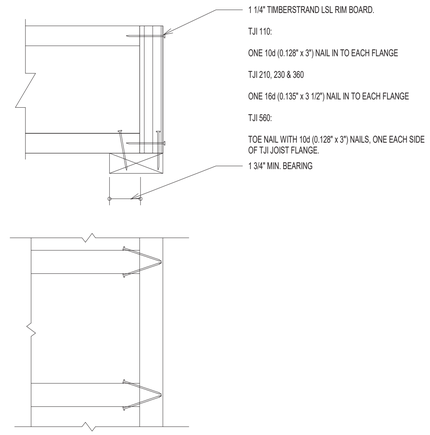

7 / S108 RIM TO TJI JOIST CONNECTION
SCALE: 3/4" = 1'-0"

APPROVED
Montgomery County
Historic Preservation Commission

REVIEWED
By Dan.Bruechert at 4:20 pm, Dec 18, 2023

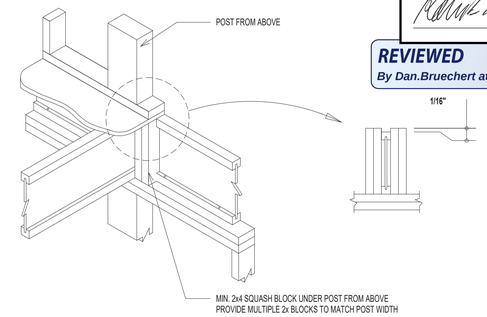

4 / S108 JOISTS BRG @ EXT. WALL W/ POST ABOVE
SCALE: 3/4" = 1'-0"

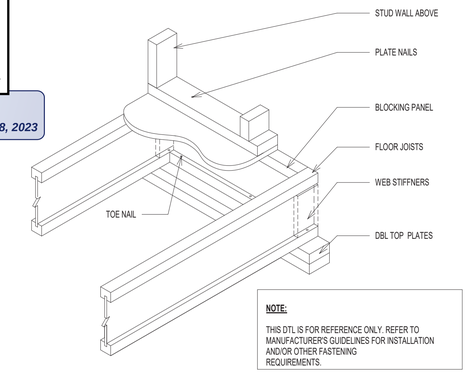

NOTE:

THIS DTL IS FOR REFERENCE ONLY. REFER TO MANUFACTURER'S GUIDELINES FOR INSTALLATION AND/OR OTHER FASTENING REQUIREMENTS.

1 / S108 I JOIST WITH BRG WALL ABOVE
SCALE: 3/4" = 1'-0"

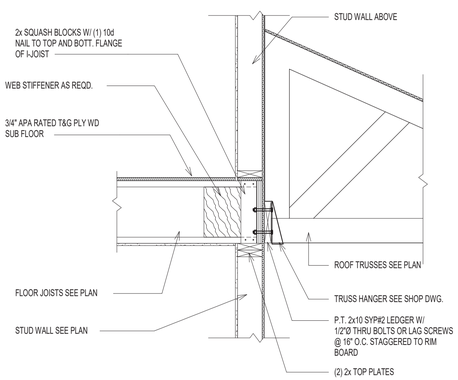

11 / S108 SECTION @ PORCH
SCALE: 3/4" = 1'-0"

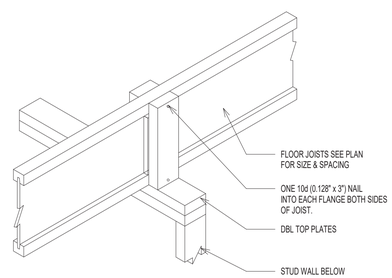

8 / S108 TYP. SQUASH BLOCKS DETAIL
SCALE: 3/4" = 1'-0"

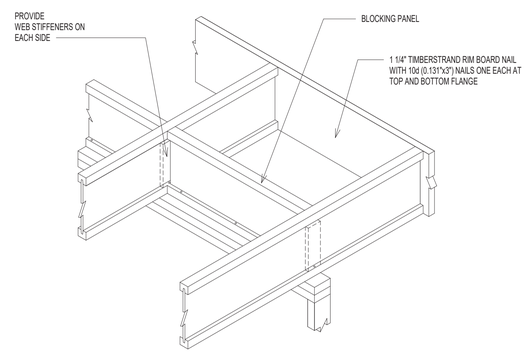

DO NOT CUT FLANGES OR WEB

5 / S108 CANTILEVER JOIST DETAIL
SCALE: 3/4" = 1'-0"

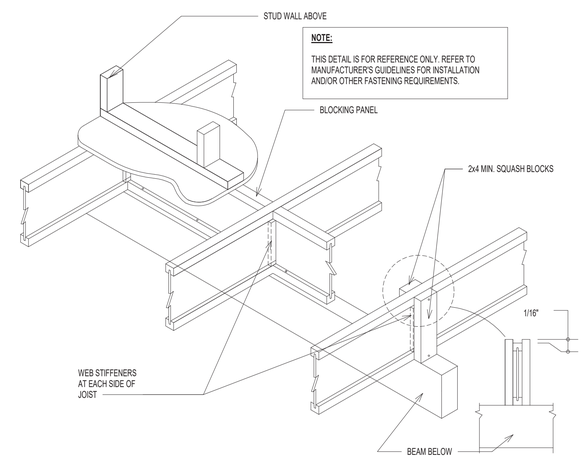

NOTE:

THIS DETAIL IS FOR REFERENCE ONLY. REFER TO MANUFACTURER'S GUIDELINES FOR INSTALLATION AND/OR OTHER FASTENING REQUIREMENTS.

2 / S108 JOIST W/ INT. BRG. ON BEAM & BRG. WALL FROM ABOVE
SCALE: 3/4" = 1'-0"

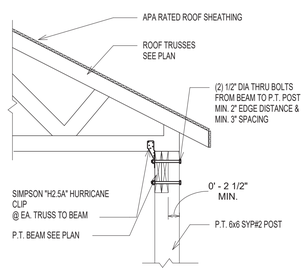

12 / S108 SD1_12_PORCH ROOF TO PORCH BEAM CONNECTION
SCALE: 3/4" = 1'-0"

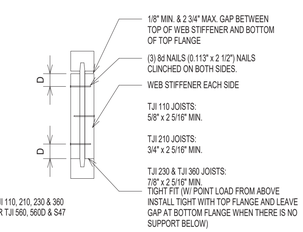

TJI JOIST SERIES	DEPTH	MINIMUM WEB STIFFENER SIZE	NAILING		
			TYPE	END	INTERMEDIATE
110	ALL	5/8" x 2 5/16"	8d (0.113" x 2 1/2")	3	3
210	ALL	3/4" x 2 5/16"			
230 & 360	ALL	7/8" x 2 5/16"			

9 / S108 TYP. I JOIST WEB STIFFENER SCHEDULE
SCALE: 3/4" = 1'-0"

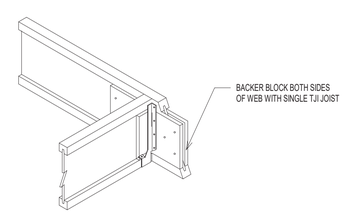

TJI	110		210		230 OR 360		560	
DEPTH	9 1/2" OR 11 7/8"	14"	9 1/2" OR 11 7/8"	14" OR 16"	9 1/2" OR 11 7/8"	14" OR 16"	11 7/8"	14" OR 16"
FILLER BLOCK (1)	2x6	2x8	2x6 + 3/8" SHEATHING	2x8 + 3/8" SHEATHING	2x6 + 1/2" SHEATHING	2x8 + 1/2" SHEATHING	(2) 2x6	(2) 2x8
BACKER BLOCK (1)	5/8" OR 3/4"		3/4" OR 7/8"		7/8" OR 1" NET		2x6	2x8

6 / S108 SINGLE JOIST TO SINGLE JOIST CONNECTION
SCALE: 3/4" = 1'-0"

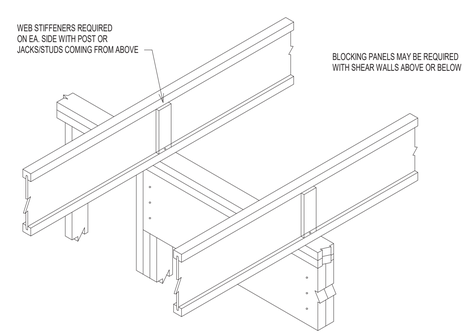

3 / S108 INTERMEDIATE BEARING
SCALE: 3/4" = 1'-0"

GTM ARCHITECTS

7735 OLD GEORGETOWN ROAD
SUITE 700
BETHESDA, MD 20814
(240)333-2000
(240)333-2001 FAX
WWW.GTMARCHITECTS.COM

Seal

STATE OF MARYLAND · KAUSHAL KANSARA · 40082 · PROFESSIONAL ENGINEER

9/29/2023

DocuSigned by: Kaushal Kansara
2D576AFBD0B3457...

Consultant

structBIM ENGINEERS
WE DESIGN....WE BIM
46400 BENEDICT DR, SUITE #211
PHONE: 703-657-4481
E-MAIL: info@structBIM.com

Project

3929 WASHINGTON ST,
KENSINGTON, MD

I certify that these documents were prepared or approved by me, and that I am a duly licensed Professional Engineer under the laws of the State of Maryland, license number 40082, Expiration Date: 02-13-2025.

Issue Description	*Date*

structBIM Project No.	23-0260
Checked By	KK
Drawn By	KK
Scale	3/4" = 1'-0"

Sheet Title

FRAMING DETAILS

Sheet No.

S108

PLOTTED ON: 9/29/2023 10:10:27 AM

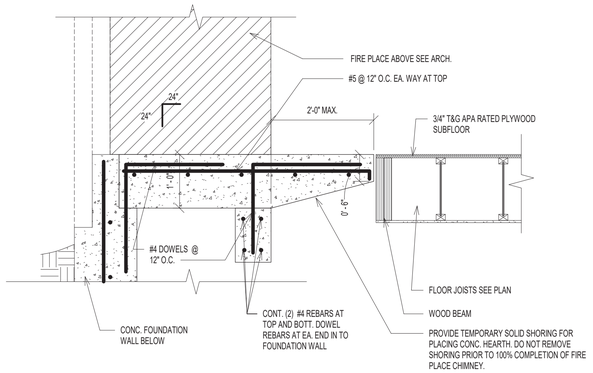

13 S109 TYP. CONC. HERTH DETAIL
SCALE: 3/4" = 1'-0"

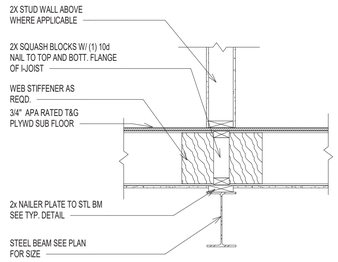

9 S109 TYP. STEEL BEAM NAILER PLATE CONNECTION
SCALE: 3/4" = 1'-0"

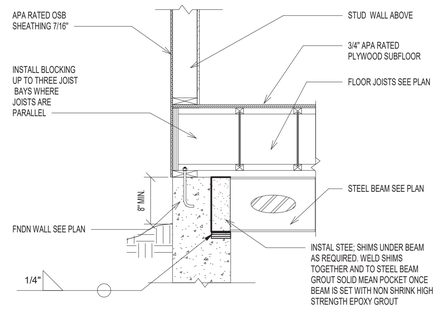

5 S109 TYP. STEEL BEAM NAILER PLATE CONNECTION
SCALE: 3/4" = 1'-0"

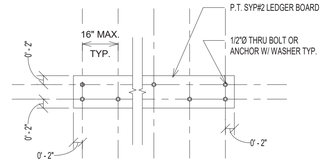

1 S109 TYP. DECK CONNECTION DETAIL
SCALE: 3/4" = 1'-0"

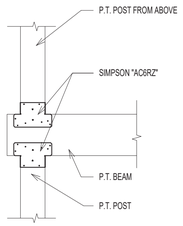

END CONDITOIN

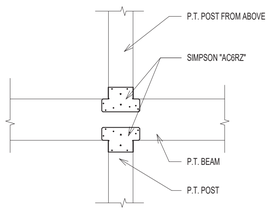

INTERIOR CONDITOIN

14 S109 TYP. DECK POST CONNECTION W/ POST FROM ABOVE
SCALE: 3/4" = 1'-0"

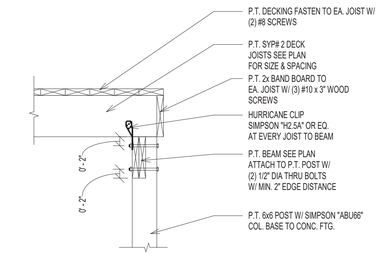

11 S109 DECK JOIST TO BEAM CONNECTION
SCALE: 3/4" = 1'-0"

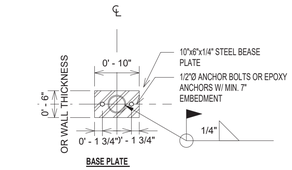

6 S109 TYP. STL. BASE PLATE DETAIL FOR STL COL.
SCALE: 3/4" = 1'-0"

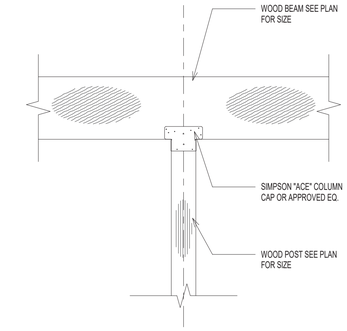

2 S109 INTERIOR POST W/ COL. CAP CONN.
SCALE: 3/4" = 1'-0"

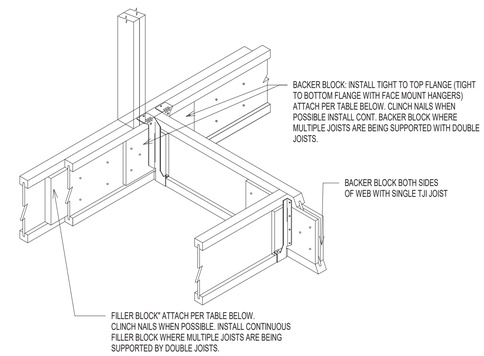

TJI	110		210		230 OR 360		560	
DEPTH	9 1/2" OR 11 7/8"	14"	9 1/2" OR 11 7/8"	14" OR 16"	9 1/2" OR 11 7/8"	14" OR 16"	11 7/8"	14" OR 16"
FILLER BLOCK (1)	2x6	2x8	2x6 + 3/8" SHEATHING	2x8 + 3/8" SHEATHING	2x6 + 1/2" SHEATHING	2x8 + 1/2" SHEATHING	(2) 2x6	(2) 2x8
BACKER BLOCK (1)	5/8" OR 3/4"		3/4" OR 7/8"		7/8" OR 1" NET		2x6	2x8

7 S109 TYPICAL DBL JOISTS CONNECTION W/ JOIST SUPPORTED
SCALE: 3/4" = 1'-0"

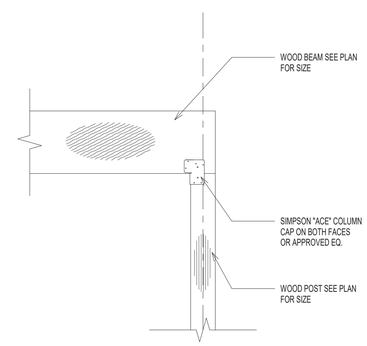

3 S109 END COL. TO BEAM BEARING CONNECTION
SCALE: 3/4" = 1'-0"

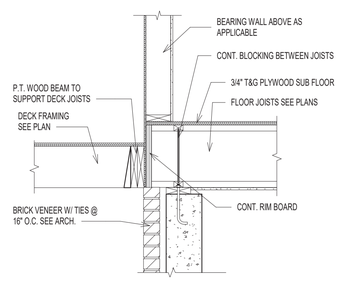

12 S109 SECTION
SCALE: 3/4" = 1'-0"

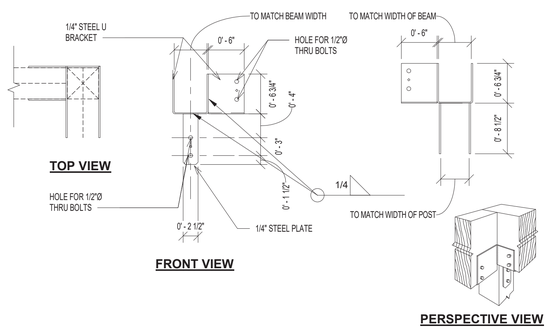

15 S109 TYPICAL COLUMN CAP DETAIL AT CORNER
SCALE: 1" = 1'-0"

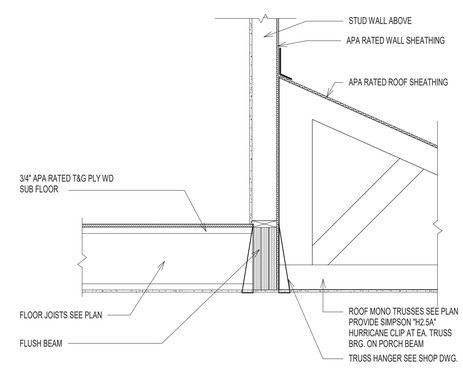

8 S109 FRONT PORCH ROOF CONNECTION
SCALE: 3/4" = 1'-0"

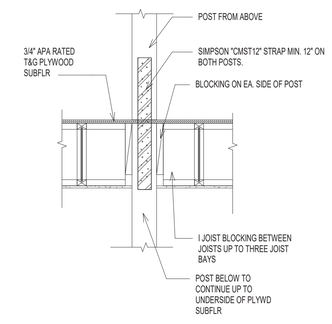

4 S109 TYP. POST TO POST CONNECTION
SCALE: 3/4" = 1'-0"

GTM ARCHITECTS
7735 OLD GEORGETOWN ROAD
SUITE 700
BETHESDA, MD 20814
(240)333-2000
(240)333-2001 FAX
WWW.GTMARCHITECTS.COM

Seal

STATE OF MARYLAND · KAUSHAL KANSARA · 40082 · PROFESSIONAL ENGINEER
9/29/2023
DocuSigned by: Kaushal Kansara 2D576AF8D063457...

Consultant

structBIM ENGINEERS
WE DESIGN....WE BIM
46400 BENEDICT DR, SUITE #211
PHONE: 703-657-4481
E-MAIL: info@structBIM.com

Project

3929 WASHINGTON ST, KENSINGTON, MD

I certify that these documents were prepared or approved by me, and that I am a duly licensed Professional Engineer under the laws of the State of Maryland, license number 40082, Expiration Date: 02-13-2025.

Issue Description	*Date*

structBIM Project No.	23-0260
Checked By	KK
Drawn By	KK
Scale	As indicated

Sheet Title

FRAMING DETAILS

Sheet No.

S109

PLOTTED ON: 9/29/2023 10:16:33 AM
FILE NAME:

Point Load Connector Spacing
8- Screw Connection

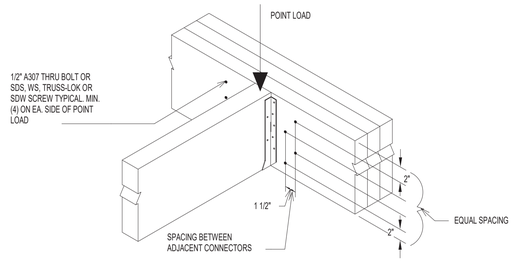

2 / S110 LVL BEAM CONNECTION AT POINT LOAD
SCALE: 3/4" = 1'-0"

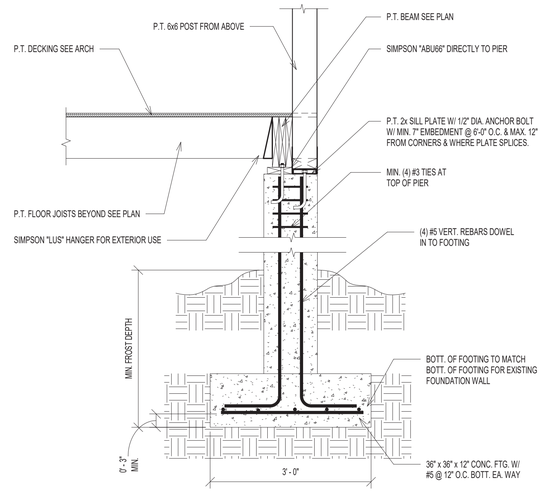

6 / S110 TYP. SECTION AT DECK OVER PIER WITH POST FROM ABOVE
SCALE: 3/4" = 1'-0"

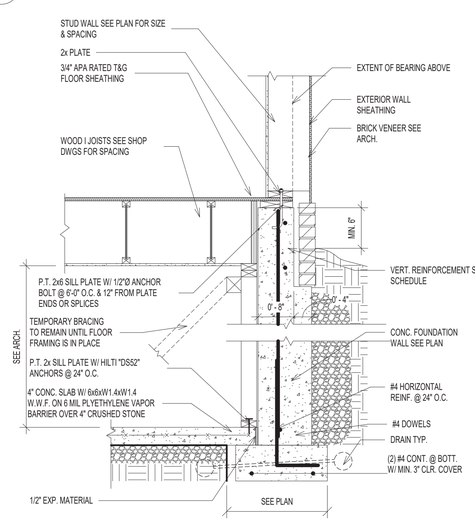

7 / S110 SECTION @ HIGH GRADE CONDITION
SCALE: 3/4" = 1'-0"

APPROVED
Montgomery County
Historic Preservation Commission

REVIEWED
By Dan.Bruechert at 4:20 pm, Dec 18, 2023

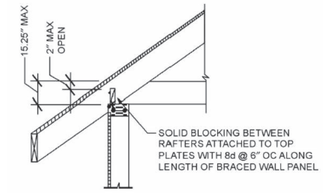

3 / S110 TYPICAL ROOF BEARING @ BRACED WALL PANEL
SCALE: 3/4" = 1'-0"

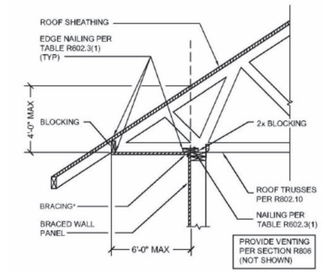

4 / S110 TYPICAL ROOF BEARING @ BRACED WALL PANEL
SCALE: 3/4" = 1'-0"

ALLOWABLE HOLES

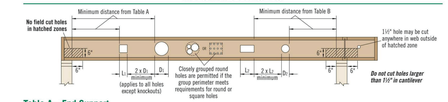

Table A—End Support
Minimum distance from edge of hole to inside face of nearest end support

Depth	TJI®	Round Hole Size 2"	3"	4"	5"	6½"	7"	8½"	11"	13"	Square or Rectangular Hole Size 2"	3"	4"	5"	6½"	7"	8½"	11"	13"
9½"	110	1'-0"	1'-6"	2'-0"	2'-6"	3'-0"					1'-0"	1'-6"	2'-6"	3'-6"	4'-0"				
	210	1'-0"	1'-6"	2'-0"	3'-0"	5'-0"					1'-0"	2'-0"	2'-6"	4'-0"	5'-0"				
	230	1'-0"	2'-0"	2'-6"	3'-6"	5'-0"					1'-0"	2'-0"	3'-0"	4'-0"	5'-0"				
11⅞"	110	1'-0"	1'-0"	1'-0"	1'-0"	2'-0"	2'-0"	5'-0"			1'-0"	1'-0"	1'-6"	2'-0"	4'-0"	4'-0"	6'-0"		
	210	1'-0"	1'-0"	1'-0"	1'-6"	2'-6"	3'-0"	5'-6"			1'-0"	1'-0"	2'-0"	2'-6"	5'-0"	5'-0"	6'-6"		
	230	1'-0"	1'-0"	1'-0"	2'-0"	3'-0"	3'-6"	6'-0"			1'-0"	1'-0"	2'-0"	3'-0"	5'-6"	5'-6"	7'-0"		
	360	1'-0"	1'-0"	1'-6"	2'-6"	4'-6"	5'-0"	7'-0"			1'-0"	1'-0"	2'-6"	4'-0"	6'-6"	6'-6"	7'-6"		
	560	1'-0"	1'-0"	1'-0"	3'-0"	5'-0"	5'-6"	8'-0"			1'-0"	2'-0"	3'-0"	5'-0"	7'-0"	7'-6"	8'-0"		
14"	110	1'-0"	1'-0"	1'-0"	1'-0"	1'-0"	2'-0"	5'-0"			1'-0"	1'-0"	1'-0"	1'-6"	3'-6"	4'-0"	6'-0"	8'-0"	
	210	1'-0"	1'-0"	1'-0"	1'-0"	1'-0"	1'-6"	6'-0"			1'-0"	1'-0"	1'-0"	2'-0"	4'-0"	4'-6"	6'-6"	8'-6"	
	230	1'-0"	1'-0"	1'-0"	1'-0"	1'-6"	2'-0"	3'-6"	6'-6"		1'-0"	1'-0"	1'-0"	2'-0"	4'-0"	5'-0"	7'-0"	9'-0"	
	360	1'-0"	1'-0"	1'-0"	1'-0"	2'-6"	3'-6"	5'-6"	8'-0"		1'-0"	1'-0"	1'-0"	2'-6"	5'-6"	6'-6"	8'-0"	9'-6"	
	560	1'-0"	1'-0"	1'-0"	1'-0"	2'-6"	3'-0"	6'-0"	9'-0"		1'-0"	1'-0"	1'-6"	3'-6"	6'-6"	7'-0"	9'-0"	10'-0"	
16"	210	1'-0"	1'-0"	1'-0"	1'-0"	1'-0"	1'-6"	3'-6"	6'-0"		1'-0"	1'-0"	1'-0"	1'-0"	2'-6"	3'-6"	6'-6"	8'-0"	10'-6"
	230	1'-0"	1'-0"	1'-0"	1'-0"	1'-0"	2'-0"	4'-0"	6'-6"		1'-0"	1'-0"	1'-0"	1'-0"	3'-0"	3'-6"	7'-0"	8'-0"	11'-0"
	360	1'-0"	1'-0"	1'-0"	1'-0"	1'-0"	1'-0"	3'-0"	6'-0"	9'-0"	1'-0"	1'-0"	1'-0"	1'-0"	4'-0"	5'-0"	9'-0"	10'-0"	11'-6"
	560	1'-0"	1'-0"	1'-0"	1'-0"	1'-0"	1'-0"	3'-0"	6'-6"	10'-0"	1'-0"	1'-0"	1'-0"	1'-6"	5'-0"	6'-0"	10'-0"	11'-0"	12'-0"

Table B—Intermediate or Cantilever Support
Minimum distance from edge of hole to inside face of nearest intermediate or cantilever support

Depth	TJI®	Round Hole Size 2"	3"	4"	5"	6½"	7"	8½"	11"	13"	Square or Rectangular Hole Size 2"	3"	4"	5"	6½"	7"	8½"	11"	13"
9½"	110	1'-6"	2'-6"	3'-0"	4'-0"	7'-6"					1'-6"	2'-6"	3'-6"	5'-0"	6'-6"				
	210	2'-0"	2'-6"	3'-6"	4'-6"	7'-6"					2'-0"	2'-6"	3'-6"	5'-0"	7'-0"				
	230	2'-6"	3'-0"	4'-0"	5'-0"	8'-0"					2'-6"	3'-0"	4'-6"	6'-0"	7'-6"				
11⅞"	110	1'-0"	1'-0"	1'-0"	2'-6"	4'-0"	6'-0"	8'-0"			1'-0"	1'-0"	2'-6"	4'-0"	6'-0"	7'-6"	9'-0"		
	210	1'-0"	1'-0"	2'-0"	3'-0"	4'-6"	5'-0"	9'-0"			1'-0"	2'-0"	3'-0"	4'-6"	7'-6"	8'-0"	10'-0"		
	230	1'-0"	2'-0"	2'-6"	3'-6"	5'-0"	5'-6"	9'-6"			1'-0"	2'-0"	3'-6"	5'-0"	8'-0"	8'-6"	10'-6"		
	360	2'-0"	3'-0"	4'-0"	5'-6"	7'-0"	7'-6"	11'-0"			2'-0"	3'-6"	5'-0"	7'-0"	9'-6"	9'-6"	11'-0"		
	560	1'-6"	3'-0"	4'-6"	5'-6"	8'-0"	8'-6"	13'-0"			3'-0"	4'-6"	6'-0"	8'-0"	10'-6"	11'-0"	12'-0"		
14"	110	1'-0"	1'-0"	1'-0"	1'-0"	2'-0"	2'-6"	4'-0"	8'-0"		1'-0"	1'-0"	1'-0"	2'-0"	5'-0"	6'-0"	9'-0"	12'-0"	
	210	1'-0"	1'-0"	1'-0"	1'-0"	2'-6"	3'-0"	5'-0"	9'-0"		1'-0"	1'-0"	2'-0"	3'-6"	6'-0"	7'-0"	10'-0"	13'-6"	
	230	1'-0"	1'-0"	1'-0"	2'-0"	3'-0"	3'-6"	5'-6"	10'-0"		1'-0"	1'-0"	2'-6"	4'-0"	6'-6"	7'-6"	10'-6"	13'-0"	
	360	1'-0"	1'-0"	2'-0"	3'-6"	5'-0"	6'-0"	8'-6"	12'-6"		1'-0"	2'-0"	4'-0"	5'-6"	9'-0"	9'-0"	12'-0"	14'-0"	
	560	1'-0"	1'-0"	1'-0"	3'-6"	5'-6"	6'-0"	9'-6"	13'-6"		1'-0"	2'-0"	3'-0"	5'-0"	7'-0"	10'-0"	13'-6"	15'-0"	
16"	210	1'-0"	1'-0"	1'-0"	1'-0"	1'-0"	1'-0"	3'-0"	5'-6"	9'-6"	1'-0"	1'-0"	1'-0"	2'-6"	5'-0"	6'-0"	9'-6"	12'-6"	15'-6"
	230	1'-0"	1'-0"	1'-0"	1'-0"	1'-0"	2'-0"	4'-0"	6'-6"	10'-6"	1'-0"	1'-0"	1'-0"	2'-6"	5'-0"	6'-0"	10'-6"	13'-0"	16'-0"
	360	1'-0"	1'-0"	1'-0"	1'-0"	2'-0"	4'-0"	6'-0"	10'-0"	13'-6"	1'-0"	1'-0"	1'-0"	2'-0"	7'-0"	8'-0"	13'-0"	16'-0"	17'-0"
	560	1'-0"	1'-0"	1'-0"	1'-0"	2'-6"	3'-6"	7'-0"	11'-0"	15'-0"	1'-0"	1'-0"	3'-6"	5'-6"	9'-0"	10'-0"	14'-6"	16'-0"	18'-0"

* Rectangular holes based on measurement of longest side.

How to Use These Tables

1. Using **Table A, Table B**, or both if required, determine the hole shape/size and select the TJI® joist and depth.
2. Scan horizontally until you intersect the correct hole size column.
3. Measurement shown is minimum distance from edge of hole to support.
4. Maintain the required minimum distance from the end **and** the intermediate or cantilever support.

General Notes

- Holes may be located vertically anywhere within the web. Leave ¼" of web (minimum) at top and bottom of hole.
- Knockouts are located in web at approximately 12" on-center; they do not affect hole placement.
- For simple span (5' minimum) uniformly loaded joists meeting the requirements of this guide, one maximum size round hole may be located at the center of the joist span **provided that no other holes occur in the joist.**
- Distances are based on the maximum uniform loads shown in this guide. For other load conditions or hole configurations, use Forte™ software or contact your iLevel representative.

1 / S110 TYPICAL ALLOWABLE HOLE SIZES FOR I JOISTS
SCALE: 3/4" = 1'-0"

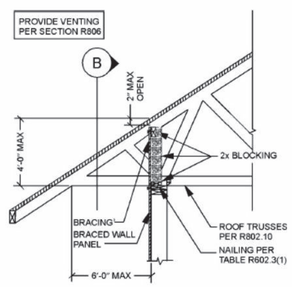

A SECTION

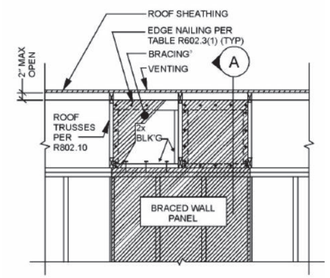

B ELEVATION

5 / S110 TYPICAL ROOF BEARING @ BRACED WALL PANEL
SCALE: 3/4" = 1'-0"

ASSEMBLY	A	B	C	D	E	F
SKETCH	0'-2" 0'-2" 0'-2" 0'-2" 0'- 1 3/4"	0'-2" 0'-2" 0'-2" 0'-2" 0'- 1 3/4"	0'-2" 0'-2" 0'-2" 0'-2" 0'- 1 3/4" 0'- 3 1/2"	0'-2" 0'-2" 0'-2" 0'-2" 0'- 1 3/4"	0'-2" 0'-2" 0'-2" 0'-2" 0'- 1 3/4" 0'- 1 3/4" 0'- 3 1/2"	0'-2" 0'-2" 0'-2" 0'-2" 0'- 3 1/2"
FASTNER	SIMPSON - SDW22 x 3 5/8"	SIMPSON - SDW22 x 5"	SIMPSON - SDW22 x 5"	SIMPSON - SDW22 x 6 3/4"	SIMPSON - SDW22 x 6 3/4"	SIMPSON - SDW22 x 6 3/4"
SPACING	12" O.C.	12" O.C.	12" O.C.	12" O.C.	12" O.C.	12" O.C.
NOTE		INSTALL FASTNERS FROM BOTH SIDES STAGGER BY 3" FASTENERS FROM OPPOSITE SIDES		INSTALL FASTNERS FROM BOTH SIDES STAGGER BY 3" FASTENERS FROM OPPOSITE SIDES	INSTALL FASTNERS FROM BOTH SIDES STAGGER BY 3" FASTENERS FROM OPPOSITE SIDES	INSTALL FASTNERS FROM BOTH SIDES STAGGER BY 3" FASTENERS FROM OPPOSITE SIDES

NOTES:

1. CONTACT ENGINEER FOR ALTERNATE FASTENERS IF NEEDED.
2. NOTIFY ENGINEER IF POINT LOAD IS APPLIED ON LVL BEAMS. INSTALL MIN. 8 FASTENERS ON EITHER SIDE OF POINT LOAD WITH 2" SPACING.
3. MAINTAIN MINIMUM EDGE DISTANCE OF 6" FROM ENDS.

2A / S110 TYP. LVL PLY CONNECTION DETAIL
SCALE: 3/4" = 1'-0"

GTM ARCHITECTS
7735 OLD GEORGETOWN ROAD
SUITE 700
BETHESDA, MD 20814
(240)333-2000
(240)333-2001 FAX
WWW.GTMARCHITECTS.COM

Seal

STATE OF MARYLAND · KAUSHAL KANSARA · 40082 · PROFESSIONAL ENGINEER

9/29/2023

Developed by: Kaushal Kansara
2D576AF8D063457...

Consultant

structBIM ENGINEERS
WE DESIGN....WE BIM
46400 BENEDICT DR, SUITE #211
PHONE: 703-657-4481
E-MAIL: info@structBIM.com

Project

3929 WASHINGTON ST,
KENSINGTON, MD

I certify that these documents were prepared or approved by me, and that I am a duly licensed Professional Engineer under the laws of the State of Maryland, license number 40082, Expiration Date: 02-13-2025.

Issue Description	*Date*

structBIM Project No.	23-0260
Checked By	KK
Drawn By	KK
Scale	3/4" = 1'-0"

Sheet Title
DETAILS

Sheet No.
S110

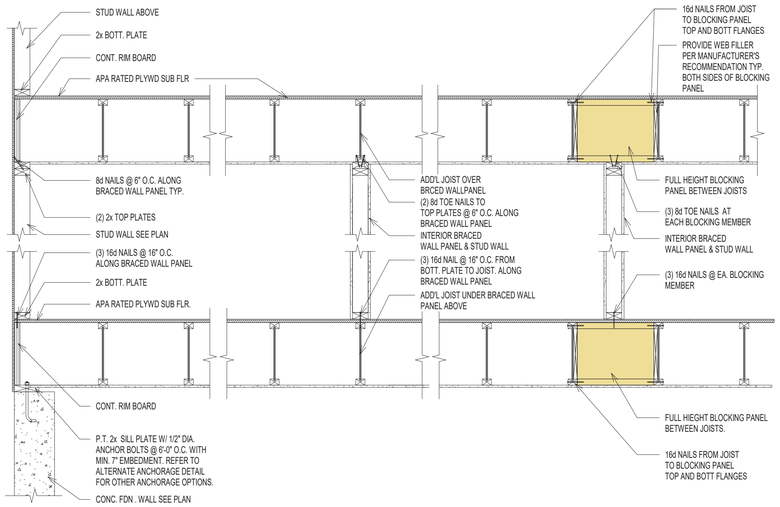

3 / S111 BRACED WALL PANEL PARALLEL TO I-JOISTS
SCALE: 3/4" = 1'-0"

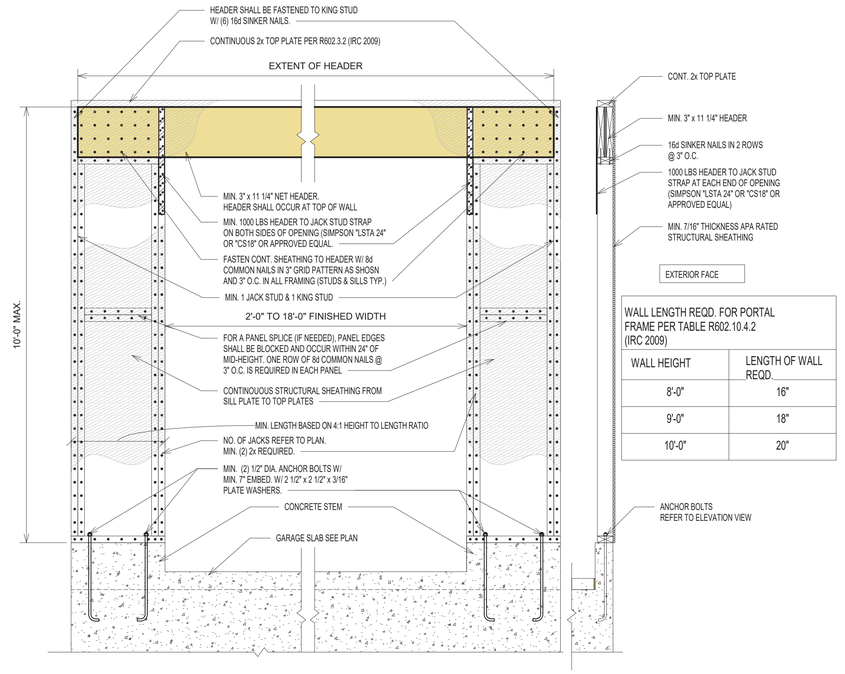

WALL LENGTH REQD. FOR PORTAL FRAME PER TABLE R602.10.4.2 (IRC 2009)

WALL HEIGHT	LENGTH OF WALL REQD.
8'-0"	16"
9'-0"	18"
10'-0"	20"

ELEVATION VIEW

SECTION VIEW

1 / S111 PORTAL FRAME @ GARAGE (PFG) LEFT SIDE ONLY
SCALE: 3/4" = 1'-0"

WALL BRACING/SHEAR WALL SCHEDULE

MARK	DESCRIPTION	FASTENING PATTERN
CS-PF	7/16" APA RATED OSB SHEATHING	8d COMMON NAILS (2 1/2" x 0.131") @ 6" O.C. ON EDGES & 12" O.C. IN-FIELD
CS-WSP	7/16" APA RATED OSB SHEATHING	8d COMMON NAILS (2 1/2" x 0.131") @ 6" O.C. ON EDGES & 12" O.C. IN-FIELD
GB (BOTH SIDES)	1/2" GYPSUM WALL BOARD SHEATHING	1 1/2 " GALVANIZED ROOFING NAILS OR 1 1/2" GALVANIZED STAPLES OR 1 1/4" SCREWS TYPE W OR S @ 7" O.C. ON EDGES & IN-FIELD
GB (ONE SIDE)	1/2" GYPSUM WALL BOARD SHEATHING	1 1/2 " GALVANIZED ROOFING NAILS OR 1 1/2" GALVANIZED STAPLES OR 1 1/4" SCREWS TYPE W OR S @ 7" O.C. ON EDGES & IN-FIELD
WSP	7/16" APA RATED OSB SHEATHING	8d COMMON NAILS (2 1/2" x 0.131") @ 6" O.C. ON EDGES & 12" O.C. IN-FIELD

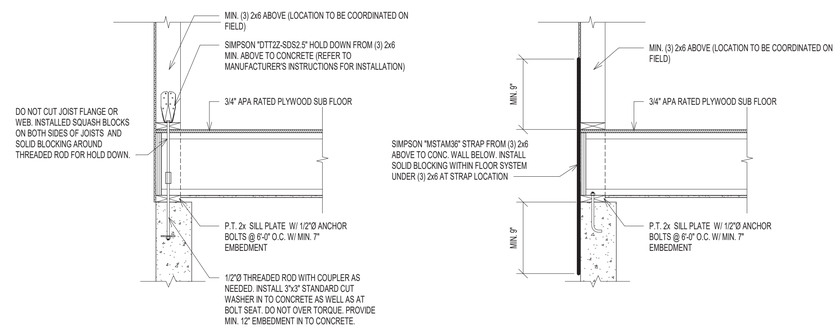

HOLD DOWN OPTION WITH SIMPSON "DTT2Z"

HOLD DOWN OPTION WITH SIMPSON "MSTAM36"

2 / S111 TYP. HOLD DOWN DETAILS (APPLY AT CORNERS < 24")
SCALE: 3/4" = 1'-0"

APPROVED
Montgomery County
Historic Preservation Commission

REVIEWED
By Dan.Bruechert at 4:25 pm, Dec 18, 2023

FILE NAME:

GTM ARCHITECTS
7735 OLD GEORGETOWN ROAD
SUITE 700
BETHESDA, MD 20814
(240)333-2000
(240)333-2001 FAX
WWW.GTMARCHITECTS.COM

Seal

STATE OF MARYLAND — KAUSHAL KANSARA — 40082 — PROFESSIONAL ENGINEER

9/29/2023

DocuSigned by: Kaushal Kansara
2D576AF8D063457...

Consultant

structBIM ENGINEERS
WE DESIGN....WE BIM
46400 BENEDICT DR, SUITE #211
PHONE: 703-657-4481
E-MAIL: info@structBIM.com

Project

3929 WASHINGTON ST,
KENSINGTON, MD

I certify that these documents were prepared or approved by me, and that I am a duly licensed Professional Engineer under the laws of the State of Maryland, license number 40082. Expiration Date: 02-13-2025.

Issue Description	*Date*

structBIM Project No.	23-0260
Checked By	KK
Drawn By	KK
Scale	3/4" = 1'-0"

Sheet Title
WALL BRACING DETAILS & SCHEDULE

Sheet No.
S111

PLOTTED ON: 9/29/2023 10:16:46 AM

GENERAL NOTES

1. Boundary information and two-foot contour data are based upon surveys performed by CAS Engineering, dated April, 2023.
2. Total lot area: Lot 16 & Part of Lot 15 = 17,527.5 sq. ft. (0.402 acres)
3. Property is located on Tax Map HP343 and WSSC 200' Sheet 213NW04.
4. Property is located on Soils Survey Map Number 24.
   Soil type(s): 2B, Glenelg silt loam , HSG "B".
5. Flood zone "X" per F.E.M.A. Firm Maps, Community Panel Number 24031C0365D.
6. Property is located in the Rock Creek Watershed, Use Class I.
7. Water Category - 1, Sewer Category - 1
8. Local utilities include:
   Water / Sewer - Washington Suburban Sanitary Commission
   Electric - PEPCO
   Telephone - Verizon
   Gas - Washington Gas
9. Property is located in the incorporated municipality of Town of Kensington.
10. Property is not located in a Special Protection Area.
11. Property is located in the Town of Kensington Historic District.
12. This plan was created without the benefit of a title report.

ZONING DATA

1. **Zoning: R-60**
   Minimum Lot Area = 6,000 sq. ft.
   Minimum Lot Width at R/W = 25 ft.
   Minimum Lot Width at B.R.L. = 60 ft.
   Front B.R.L. = 35.1 ft. (Established) [1]
   Rear B.R.L. = 20 ft.
   Side B.R.L. = 8 ft. min. each side, 18 ft. total (per Mo.Co.)
   10 ft. min. each side (Per Town of Kensington)

   [1] Per Montgomery County Code Section 4.4.1 A.4.c., the applicant may choose to use the front setback of the existing detached house that was established before demolition, excluding any approved variance, if the existing building meets the minimum front setback of the zone.

2. **Verify lot coverage in accordance with the Zoning Ordinance.**
   Lot area equal to or greater than 16,000 square feet.
   Lot Coverage: The maximum area that may be covered by any building, including any accessory building and any weatherproofed floor area above a porch, but not including any bay window measuring 10 feet in width or less and 3 feet in depth or less, chimney, porch, or up to 240 square feet of a detached garage, if the garage is less than 350 square feet of floor area and less than 20 feet in height.
   Allowable lot coverage: 20% of total lot area
   Lot 16 & Part of Lot 15 = 17,527.5 sq. ft. (per plat)
   17,527.5 x 0.20 = 3,505.5 sq. ft.
   Maximum building lot coverage (including accessory buildings) = 3,505.5 sq. ft.
   Total area covered by buildings = 2,560 sq. ft. (per architect)
3. **Verify main building height in accordance with the Zoning Ordinance.**
   First floor elevation 328.00 ft
   Mean height of building from first floor: 24.06 ft (24'-0 3/8" Per Arch.)
   Elevation at mean height of building 352.06 ft
   Average elevation along front of building 324.70 ft
   Mean height of building = 352.06 - 324.70 = 27.36 feet
   Allowable mean height of building = 30 feet
   Proposed mean height of building = 27.36 feet

TOPSOIL NOTE

TOPSOIL MUST BE APPLIED TO ALL PERVIOUS AREAS WITHIN THE LIMITS OF DISTURBANCE PRIOR TO PERMANENT STABILIZATION IN ACCORDANCE WITH MDE "STANDARDS AND SPECIFICATIONS FOR SOIL PREPARATION, TOPSOILING, AND SOIL AMENDMENTS".

DRAINAGE STATEMENT

I understand that DPS approval of this sediment control/stormwater management plan is for demonstrated compliance with required environmental runoff treatment standards. This DPS sediment control/stormwater management plan approval does not relieve me of professional responsibility. I have analyzed the proposed design for Sediment Control Permit No. 290045 and hereby state that, based upon my background, training and experience, I have determined that the proposed improvements shown on this plan meet relevant laws and regulations. I further acknowledge that I have analyzed the post development drainage patterns for this project from the standpoint of my responsibilities under current Maryland Law and have determined that if permission is required from adjacent property owners, it has been obtained and copies of those permissions have been made available to DPS.

Curt A. Schreffler 09/27/2023
Curt A. Schreffler — Date

UTILITY INFORMATION

EXISTING UNDERGROUND UTILITY LOCATIONS ARE APPROXIMATE AND MUST BE FIELD VERIFIED. UTILITY LOCATIONS ARE BASED UPON AVAILABLE RECORDS AND ARE SHOWN TO THE BEST OF OUR ABILITY.

FOR LOCATION OF UTILITIES, CALL "MISS UTILITY" AT 1-800-257-7777, OR LOG ON TO WWW.MISSUTILITY.NET/TIC 48 HOURS IN ADVANCE OF ANY WORK IN THIS VICINITY. THE EXCAVATOR MUST NOTIFY ALL PUBLIC UTILITY COMPANIES WITH UNDER GROUND FACILITIES IN THE AREA OF PROPOSED EXCAVATION AND HAVE THEIRS MARKED PRIOR TO ANY EXCAVATION. THE EXCAVATOR IS RESPONSIBLE FOR COMPLIANCE WITH THE REQUIREMENTS OF CHAPTER 36A OF THE MONTGOMERY COUNTY CODE.

FRONT YARD PARKING AREA COVERAGE

R-60: 35% MAXIMUM

FRONT YARD PARKING AREA: 965 SF
FRONT YARD AREA: 3,457 SF
COVERAGE: 17.7% (< 35%)

ROADSIDE TREE REQUIREMENTS

TO BE COMPLETED BY THE CONSULTANT AND PLACED ON THE FIRST SHEET OF THE SEDIMENT CONTROL/ STORMWATER MANAGEMENT PLAN SET FOR ALL PROJECTS.

# of Street Trees Removed	# of Street Trees Planted
0	0

Street Tree Removal Fee	Additional Required Fee
$000.00 ($500/tree)	$000.00 * ($250/tree)

Total Fees Required $000.00

Major (Shade) Trees: Spacing: 30' (±5') O.C., min.; Height: 10' min; Caliper size 2" at 6" above the ground.

Minor (Flowering) Trees: Spacing: 30' (±5') O.C., min.; Height: 8' min; Caliper size 1.5" at 6" above the ground.

Street tree species to be approved by Montgomery County Department of Transportation (MC-703.01, .02)

Minimum Tree Clearances (MC-700.01):

a) 5' from water main
b) 5' from gas box
c) 5' from foot of manhole
d) 10' from fire hydrant
e) 15' from streetlight

For additional planting requirements, please see:
MC-700.01: Tree Locations, Closed Section Roads
MC-702.01: Tree Locations, Open Section Roads
MC-702.01: Tree Planting Detail

RELATED REQUIRED PERMITS

TO BE COMPLETED BY THE CONSULTANT AND PLACED ON THE FIRST SHEET OF THE SEDIMENT CONTROL/STORMWATER MANAGEMENT PLAN SET FOR ALL PROJECTS.

IT IS THE RESPONSIBILITY OF THE PERMITTEE/OWNER OF THIS SITE TO OBTAIN ALL REQUIRED PERMITS PRIOR TO ISSUANCE OF THE SEDIMENT CONTROL PERMIT

TYPE OF PERMIT	REQ'D	NOT REQ'D	PERMIT NUMBER	EXPIRATION DATE	WORK RESTRICTION DATES
MCDPS Floodplain District		X			
WATERWAYS/WETLAND(S):		X			
a. Corps of Engineers		X			
b. MDE		X			
c. MDE Water Quality Certification		X			
MDE Dam Safety		X			
DPS Roadside Trees Protection Plan A copy of the Roadside Trees Protection Plan must be delivered to the Sediment Control Inspector at the pre-construction meeting.		X	N/A (Town of Kensington)	Approval Date	
N.P.D.E.S. - Notice of Intent When a Notice of Intent is required, the sediment control permit may not be issued until confirmation of authorization under the MDE's 20-CP permit has been submitted to DPS.		X			Date Filed
FEMA LOMR - Letter of Map Revision (Required Post Construction)		X			
OTHERS (Please List):					

CONSTRUCTION INSPECTION CHECK-OFF LIST FOR DRY WELL/RECHARGE CHAMBER

STAGE	MCDPS INSPECTOR	OWNER/ DEVELOPER
MANDATORY NOTIFICATION: Inspection and approval of each practice is required at these points prior to proceeding with construction. The permittee is required to give the MCDPS Inspector twenty-four (24) hours notice (DPS telephone 240-777-0311). The DPS inspector may waive an inspection, and allow the owner/developer to make the required inspection per a prior scheduled arrangement which has been confirmed with the DPS inspector in writing. Work completed without MCDPS approval may result in the permittee having to remove and reconstruct the unapproved work. **Upon completion of the project, a formal Stormwater Management As-Built must be submitted to MCDPS unless a Record Drawing Certification has been allowed instead.** Each of the steps listed below must be verified by either the MCDPS Inspector OR the Owner/Developer.	INITIALS/DATE	INITIALS/DATE
1. Excavation for Dry Well conforms to approved plans		
2. Placement of backfill, perforated inlet pipe and observation well conforms to approved plans		
3. Placement of geotextiles and filter media conforms to approved plans		
4. Connecting pipes, including connection to downspout, constructed per the approved plans		
5. Final grading and permanent stabilization conforms to approved plans		
TOTAL NUMBER OF DRY WELLS INSTALLED PER THIS PERMIT: **APPROVED** _____ **CONSTRUCTED** _____		

CONSTRUCTION INSPECTION CHECK-OFF LIST FOR LANDSCAPE INFILTRATION

January 2012

STAGE	MCDPS INSPECTOR	OWNER/ DEVELOPER
MANDATORY NOTIFICATION: Inspection and approval of each practice is required at these points prior to proceeding with construction. The permittee is required to give the MCDPS Inspector twenty-four (24) hours notice (DPS telephone 240-777-0311). The DPS inspector may waive an inspection, and allow the owner/developer to make the required inspection per a prior scheduled arrangement which has been confirmed with the DPS inspector in writing. Work completed without MCDPS approval may result in the permittee having to remove and reconstruct the unapproved work. **Upon completion of the project, a formal Stormwater Management As-Built must be submitted to MCDPS unless a Record Drawing Certification has been allowed instead.** Each of the steps listed below must be verified by either the MCDPS Inspector OR the Owner/Developer.	INITIALS/DATE	INITIALS/DATE
1. Excavation to subgrade conforms to approved plans		
2. Placement of backfill and observation well conforms to approved plans		
3. Placement of filter fabric, soil, and gravel media conforms to approved plans		
4. Construction of appurtenant conveyance structures conforms to approved plans		
5. Final grading and establishment of permanent stabilization conforms to approved plans		
TOTAL NUMBER OF LANDSCAPE INFILTRATION AREAS INSTALLED PER THIS PERMIT: **APPROVED** _____ **CONSTRUCTED** _____		

RECORD DRAWING CERTIFICATION

A record set of approved Sediment Control/Stormwater Management plans must be maintained onsite at all times. In addition to stormwater management items, these plans must include the number and location of all trees proposed to be planted to comply with the Tree Canopy Law. Any approved modifications or deletions of stormwater practices or tree canopy plantings or information must be shown on this record set of plans and on the Tree Canopy Requirements table. Upon completion of the project, the record set of plans, including thereon this signed Record Drawing Certification, must be submitted to the MCDPS inspector. In addition to this Record Drawing Certification, a formal Stormwater Management As-Built submission ☐ is **required** ☒ is **not required** for this project.

If this project is subject to a *Stormwater Management Right of Entry and Maintenance Agreement*, that document is recorded at Book **XXXXX** , Page **XXX** . This Record Drawing will serve as referenced in the recorded document.

"This record drawing accurately and completely represents the stormwater management practices and tree canopy plantings as they were constructed or planted. All stormwater management practices were constructed per the approved Sediment Control / Stormwater Management plans or subsequent approved revisions."

Owner/Developer Signature — Date

FIELD CHECK OF RECORD DRAWING BY MCDPS INSPECTOR: **INITIALS** _____ **DATE** _____

SEQUENCE OF CONSTRUCTION

1. Prior to clearing trees, installing sediment control measures, or grading, a pre-construction meeting must be conducted on-site with the Montgomery County Department of Permitting Services (MCDPS) Sediment Control inspector (240) 777-0311 (48 hours notice) and the MNCPPC, Planning Department, Plans Enforcement inspector (301)495-4550 (48 hours notice), the Owners representative, and the site Engineer.
   In order for the meeting to occur, the applicant must provide the MCDPS Sediment Control Inspector with one approved copy of the approved Sediment Control Plan and one approved copy of the Right-of-Way and Roadside Tree Plan (when one is required) at the pre-construction meeting. If no plans are provided, the meeting shall not occur and will need to be rescheduled prior to commencing any work.
2. The limits of disturbance (L.O.D.) must be field marked prior to clearing of trees, installation of sediment control measures, construction, or other land disturbing activities.
3. Staging, access, and stockpiling activities may not occur beyond the approved limits of disturbance (L.O.D.) defined by this plan.
4. The permittee must obtain written approval form the MNCPPC inspector, certifying that the limits of disturbance and tree protection measures are correctly marked and installed prior to commencing any clearing.
5. Clear and grade for installation of sediment control devices.
6. Install sediment control devices (Super Silt Fence, Stabilized Construction Entrance)
7. Once the sediment control devices are installed, the permittee must obtain written approval from the MCDPS inspector before proceeding with any additional clearing, grubbing or grading.
8. Raze existing structure(s).
9. The Stabilized Construction Entrance (SCE) is an erosion and sediment control practice and must remain in place until written permission is granted from the inspector for its removal.
10. Initiate rough grading. Temporarily seed any areas not to be re-graded within 7 days.
11. Install base courses for driveway, complete house construction, etc.
12. Gutters and downspouts to be installed early as possible, subject to availability of materials and labor.
13. Install stormwater management devices and associated piping but do not connect to downspouts at this time.
14. Pave driveway, install entrances per MCDOT permit, permanently stabilize all remaining areas.
15. Connect downspouts to roof drain piping and stormwater management devices.
16. Provide signed record set of plans to the sediment control inspector.
17. Obtain written approval from MCDPS inspector, prior to the removal of any sediment control device.

CAS ENGINEERING DRAINAGE NOTES

1. All storm drain pipe to be Schedule 40 PVC or of higher quality.
2. Downspout leaders originating directly from downspouts to be 4" diameter PVC, unless noted otherwise.
3. Maintain minimum 12" cover over all pipe. Pipe slopes to be 2% minimum.
4. All areaway and window well drains to sump pump - by plumber - unless noted otherwise.
5. Sump pump discharge to be located so as to avoid impact to the neighboring properties and to avoid recirculation of water.
6. The permittee shall install a splash block at the bottom of each downspout.
7. Maintenance of gutters, downspouts, leaf filters, inlets, drain pipes, drainage swales, drywells and other drainage related items should be performed as needed, but at least twice per year.
8. Drainage swales and drainage patterns shall not be impeded with trees, landscaping, fences, etc.
9. Window wells shall have a minimum freeboard of 6 inches and should be kept free of leaves and debris.
10. Ground cover (sod, seed, etc.) shall be selected based on soil conditions, drainage, sun exposure, final grade slopes, etc. per M.D.E. specifications.
11. Multi-Flow™ or equivalent drainage systems are recommended in lawn areas with a 3% slope or less.
12. Gutters and downspouts to be installed early as possible, subject to availability of materials and labor.
13. Sediment control devices must be inspected daily and with extra care before storm events. On disturbed sites they should be monitored during storm events.
14. Areas where construction is complete, such as side and rear yards, should be permanently stabilized as early as possible and in conformance with M.D.E. specifications.
15. Sump pumps serving driveways, patios, areaways, and other large open impervious surfaces must be sized for a 100-year storm event.

LEGEND

EXISTING FEATURES

- Ex. Sewer Manhole and Invert
- Ex. Water Line with Valve
- Ex. Gas Line with Valve
- Ex. Overhead Utility with Pole
- Ex. Downspout Spilled
- Ex. Two- And Ten-foot Contours
- Ex. Spot Elevation
- To Be Removed/Razed
- Ex. Wood or Stockade Fence
- Ex. Retaining Wall
- Ex. Tree (< 24" DBH)
- Ex. Roadside Tree or Ex. Tree (24" DBH - < 30" DBH)
- Ex. Tree (30" DBH and greater)

PROPOSED FEATURES

- Limit Of Disturbance (L.O.D.)
- PROP. WHC — Prop. Water-House Connection
- PROP. SHC — Prop. Sewer-House Connection
- PROP. GHC — Prop. Gas-House Connection
- PROP. EHC — Prop. Electric-House Connection
- 16 — Prop. Contour with Elevation
- XX+X — Prop. Spot Elevation
- Prop. Retaining Wall
- Prop. 4" PVC Drain Pipe
- Prop. Downspout Disconnect with Flow Path and Flow Direction
- Prop. Surface Flow Direction
- Prop. Pipe Flow Direction
- TP — Prop. Tree Protection Fence
- RP — Prop. Root Pruning
- TP--RP — Combined Tree Protection Fence and Root Pruning Trench
- TP--RP--SSF — Combined Tree Protection Fence, Root Pruning Trench and Super Silt Fence
- Limits of Proposed 6" Woodchip Layer
- Limits of Proposed Temporary Root Protection Matting and 6" Woodchip Layer
- PROP. S.C.E. — Prop. Stabilized Construction Entrance
- DRY WELL A L: 18.0 FT W: 18.0 FT D: 5.0 FT (354.5) — Dry Well with Perforated Pipe Layout, Downspout Leader, Pipe Flow Direction, and Pipe Invert Elevation
- Prop. Landscape Infiltration Facility

TREE CANOPY REQUIREMENTS

TO BE COMPLETED BY THE CONSULTANT AND PLACED ON THE FIRST SHEET OF THE SEDIMENT CONTROL/ STORMWATER MANAGEMENT PLAN SET FOR ALL PROJECTS.

EXEMPT: YES ☒ NO ☐

If exempt under Section 55-5 of the code, please check the applicable exemption category below.

Total Property Area	Total Disturbed Area
17,527.5 S.F.	12,700 S.F.

Shade Trees Required	Shade Trees Proposed
0	0

Fee in Lieu:
(Trees Required –Trees Proposed) x $250 = **$ 0.000.00**

Required Number of Shade Trees:

AREA OF THE LIMITS OF DISTURBANCE (SQUARE FEET) FROM	TO	NUMBER OF SHADE TREES REQUIRED
1 SQ. FT.	6,000 SQ. FT.	3
6,001 SQ. FT.	8,000 SQ. FT.	6
8,001 SQ. FT.	12,000 SQ. FT.	9
12,001 SQ. FT.	14,000 SQ. FT.	12
14,001 SQ. FT.	40,000 SQ. FT.	15

If the square footage of the limits of disturbance is more than 40,000 SF, then the number of shade trees required must be calculated using the following formula: (Number of Square Feet in LOD / 40,000) x 15

Exemption Categories:

☐ 55-5(a) any activity that is subject to Article II of Chapter 22A;
☐ 55-5(b) any commercial logging or timber harvesting operation with an approved exemption from Article II of Chapter 22A;
☐ 55-5(f) any activity conducted by the County Parks Department;
☐ 55-5(g) routine or emergency maintenance of an existing stormwater management facility, including an existing access road, if the activity performing the maintenance has obtained all required permits;
☐ 55-5(k) any stream restoration project if the person performing the work has obtained all necessary permits;
☐ 55-5(l) cutting or clearing any tree to comply with applicable provisions of any federal, state, or local law governing safety of dams;
☐ OTHER: Specify per Section 55-5 of the Code: This property is located within the Montgomery County incorporated municipality of Town of Kensington, therefore it is not subject to the Tree Canopy Law.

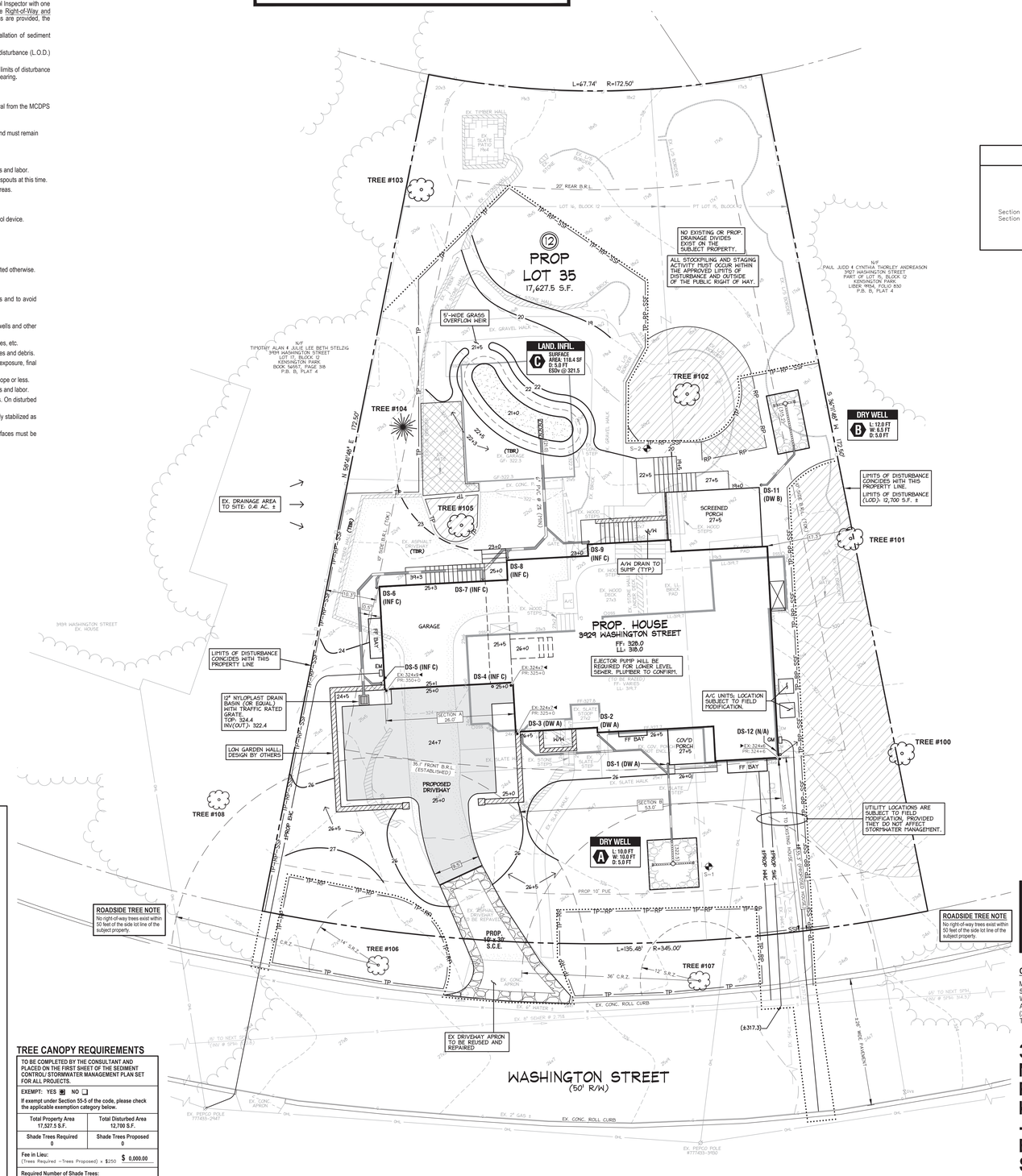

TREE DATA (ONSITE SPECIMEN AND SIGNIFICANT TREES ONLY)

TREE NO.	SPECIES	BOTANICAL NAME	D.B.H. (INCHES)	CONDITION	COMMENTS
# 100	Tulip Poplar	Liroodendron tulipifera	41.0	Good	Shared Tree (3927 Washington Street)
# 101	Northern Red Oak	Quercus rubra	32.25	Good	Shared Tree (3927 Washington Street)
# 102	Willow Oak	Quercus phellos	30.75	Good	
# 103	Western Red Cedar	Thuja plicata	30	Good	
# 104	Eastern Hemlock	Tsuga	46.5	Good	
# 105	Saucer Magnolia	Magnolia soulangeana	34.25	Good	

# INDICATES SPECIMEN TREE

TREE DATA (OFFSITE SPECIMEN AND SIGNIFICANT TREES ONLY)

TREE NO.	SPECIES	BOTANICAL NAME	D.B.H. (INCHES)	CONDITION	COMMENTS
106	Willow Oak	Quercus phellos	28	Good	Right of Way Tree
107	American Elm	Ulmus Americana	24	Good	Right of Way Tree
108	Japanese Zelkova	Zelkova serrata	25	Good	Right of Way Tree

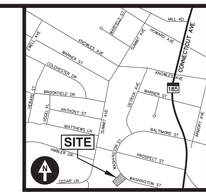

VICINITY MAP

ADC MAP 5285, GRID H-7, SCALE: 1" = 2000'

AVERAGE GRADE DETERMINATION

	ELEV @ POINT 1	ELEV @ POINT 2	AVERAGE GRADE	SECTION LENGTH	% LENGTH	AVERAGE GRADE x % LENGTH
Section A	324.90	324.70	324.80	26.0	32.91%	106.89
Section B	324.70	324.60	324.65	53.0	67.09%	217.81

AVERAGE GRADE: 324.70

CAS JOB NO.:	23-0219
DATE:	04/2023

DATE	REVISION
05/02/23	IND - Building Permit Site Plan Base
09/27/23	EBT - SCP Uploaded to ePlans for Initial Plan Review by MCDPS-WRS

STATE OF MARYLAND — CURT A. SCHREFFLER — No. 19568 — PROFESSIONAL ENGINEER

Curt A. Schreffler
CURT A. SCHREFFLER, PE
09/27/2023

PROFESSIONAL ENGINEER CERTIFICATION:
I hereby certify that these documents were prepared or approved by me, and that I am a duly licensed professional engineer under the laws of the State of Maryland, License No. 19568, expiration date 3/9/2024, and that this plan meets MCDPS criteria for building and sediment control permit applications.

Curt Schreffler
Digitally signed by Curt Schreffler
Date: 2023.09.28 05:47:42 -04'00'

APPROVED
Montgomery County
Historic Preservation Commission

REVIEWED
By Dan.Bruechert at 4:25 pm, Dec 18, 2023

THIS PLAN IS FOR ZONING, SEDIMENT CONTROL, AND STORMWATER MANAGEMENT APPROVAL ONLY.
SEE THE RIGHT-OF-WAY IMPROVEMENTS AND ROADSIDE TREE PLAN FOR TREE PLANTING, TREE REMOVAL, AND/OR ANY NECESSARY TREE PROTECTION MEASURES AND DETAILS.

OWNER/APPLICANT/BUILDER
McCullough Construction, LLC
5513 Connecticut Avenue, Suite 200
Washington, DC 20015
Attn: Tom McCullough
(202) 345-6064
Tom@mccullough-construction.com

ARCHITECT
GTM Architects (GMyers)
7735 Old Georgetown Road, Suite 700
Bethesda, MD 20814
Attn: George Myers
(240) 333-2000
gmyers@gtmarchitects.com

3929 Washington Street
N/F Lot 16 & Part of Lot 15, Block 12
Proposed Lot 35, Block 12
Kensington Park
--Town of Kensington--
Building Permit Site Plan, Stormwater Management Plan, and Sediment Control Plan
Sediment Control Permit #: 290045

Proposed Lot 35, Block 12
n/f Lot 16 & Part of Lot 15, Block 12, Kensington Park
Plat Book B, Plat No. 4, Recorded 11/15/1890
Wheaton (13th) Election District, Montgomery County, MD

3929 Washington Street
Kensington, Maryland 20895

CAS ENGINEERING

CAS ENGINEERING-MD
10 South Bentz Street
Frederick, Maryland 21701
301-607-8031 Phone
info@casengineering.com
www.casengineering.com

CAS ENGINEERING-DC, LLC
4836 MacArthur Boulevard, NW, 2nd Floor
Washington, DC 20007
202-393-7200 Phone
info@cas-dc.com
www.cas-dc.com

0 5 10 15 20
SCALE: 1 INCH = 10 FEET

TECHNICAL REVIEW OF SEDIMENT CONTROL	ADMINISTRATIVE REVIEW	
REVIEWED DATE	REVIEWED DATE	DPS approval of a sediment control or stormwater management plan is for demonstrated compliance with minimum environmental runoff treatment standards and does not create or imply any right to divert or concentrate runoff onto any adjacent property without that property owner's permission. It does not relieve the design engineer or other responsible person of professional liability or ethical responsibility for the adequacy of the drainage design as it affects uphill or downhill properties.
TECHNICAL REVIEW OF STORMWATER MANAGEMENT	**SMALL LOT DRAINAGE APPROVAL**	**290045** SEDIMENT CONTROL PERMIT NO.
REVIEWED DATE	N/A: ☐ OR REVIEWED DATE	**N/A** STORMWATER MANAGEMENT FILE NO.
MCDPS APPROVAL OF THIS PLAN WILL EXPIRE TWO YEARS FROM THE DATE OF APPROVAL IF THE PROJECT HAS NOT STARTED.	MCDPS APPROVAL DOES NOT NEGATE THE NEED FOR A MCDPS ACCESS PERMIT.	

SHEET TITLE:
Building Permit Site Plan, SWM Plan, and Sediment Control Plan