HISTORIC PRESERVATION COMMISSION

Marc Elrich
County Executive

Robert K. Sutton
Chairman

Date: July 11, 2023

MEMORANDUM

TO: Rabbiah Sabbakhan
Department of Permitting Services
FROM: Dan Bruechert
Historic Preservation Section
Maryland-National Capital Park & Planning Commission
SUBJECT: Historic Area Work Permit #1037037 - Sign Installation & Door Replacement

---

The Montgomery County Historic Preservation Commission (HPC) has reviewed the attached application for a Historic Area Work Permit (HAWP). This application was **Approved** by the Historic Preservation Staff. Additional work includes restoring the historic ticket booth, repointing the masonry, and painting the ground floor. This additional work is repair and /or in-kind and does not require a HAWP.

The HPC staffhas reviewed and stamped the attached construction drawings.

THE BUILDING PERMIT FOR THIS PROJECT SHALL BE ISSUED CONDITIONAL UPON ADHERENCE TO THE ABOVE APPROVED HAWP CONDITIONS AND MAY REQUIRE APPROVAL BY DPS OR ANOTHER LOCAL OFFICE BEFORE WORK CAN BEGIN.

Applicant: Amee Bearne
Address: 8725 Flower Ave., Silver Spring

This HAWP approval is subject to the general condition that the applicant will obtain all other applicable Montgomery County or local government agency permits. After the issuance of these permits, the applicant must contact this Historic Preservation Office if any changes to the approved plan are made. Once work is complete the applicant will contact Dan Bruechert at 301.563.3400 or dan.bruechert@montgomeryplanning.org to schedule a follow-up site visit.

HISTORIC PRESERVATION COMMISSION

HAWP #: 1037037 at: 8725 Flower Ave., Silver Spring

submitted on: 7/10/2023

has been reviewed and determined that the proposal fits into the following category/categories:

- [ ] Repair or replacement of a masonry foundation with new masonry materials that closely match the original in appearance;
- [ ] Installation of vents or venting pipes in locations not visible from the public right-of-way;
- [ ] New gutters and downspouts;
- [ ] Removal of vinyl, aluminum, asbestos, or other artificial siding when the original siding is to be repaired and/or replaced in kind;
- [ ] Removal of accessory buildings that are not original to the site or non-historic construction;
- [x] Repair or replacement of missing or deteriorated architectural details such as trim or other millwork, stairs or stoops, porch decking or ceilings, columns, railings, balusters, brackets shutters, etc., with new materials that match the old in design, texture, visual characteristics, and, where possible materials, so long as the applicant is able to provide one extant example, photographic evidence, or physical evidence that serves as the basis for the work proposed;
- [ ] Construction of wooden decks that are at the rear of a structure and are not visible from a public right-of-way;
- [ ] Roof replacement with -compatible roofing materials, or with architectural shingles replacing 3-Tab asphalt shingles;
- [ ] Installation of storm windows or doors that are compatible with the historic resource or district;
- [ ] Repair, replacement or installation of foundation-level doors, windows, window wells, and areaways, or foundation vents, venting pipes, or exterior grills that do not alter the character-defining features and/or the historic character of the resource;
- [ ] Construction of fences that are compatible with the historic site or district in material, height, location, and design;
  - [ ] Fence is lower than 48" in front of rear wall plane;
- [ ] Construction of walkways, parking pads, patios, driveways, or other paved areas that are not visible from a public right-of-way and measure no more than 150 square feet in size;
- [ ] Replacement of existing walkways, parking pads, patios, driveways, or other paved areas with materials that are compatible with the visual character of the historic site and district and that are no greater than the dimensions of the existing hardscape;
- [ ] Construction of small accessory buildings no larger than 250 square feet in size that are not visible from the public right-of-way;
- [ ] Installations of skylights on the rear of a structure that will not be visible from the public right-of-way, and would not remove or alter character-defining roof materials;
- [ ] Installation of solar panels and arrays in locations that are not readily visible from the public right-of-way or that are designed so as to have a minimal impact on the historic resource or the historic district (e.g., systems that are ground-mounted in areas other than the front or side yard of a corner lot, located on accessory or outbuildings, on non-historic additions, or on rear facing roof planes);
- [ ] Installation of car charging stations in any location on a property or in the right-of-way;

Installation of satellite dishes;

- [ ] Removal of trees greater than 6" in diameter (d.b.h.) that are dead, dying, or present an immediate hazard.
- [ ] Removal of trees greater than 6" in diameter (d.b.h.) in the rear of the property that will not impact the overall tree canopy of the surrounding district or historic site;
  - [ ] Replacement tree required as a condition; and,
- [ ] Other minor alterations that may be required by the Department of Permitting Services post-Commission approval that would have no material effect on the historic character of the property.

Staff finds the proposal complies with Chapter 24A, the Secretary of the Interior's Standards for Rehabilitation, and any additional requisite guidance. Under the authority of COMCOR No. 24A.04.01, this HAWP is approved by Tom Brechet on 7/11/2023. The approval memo and stamped drawings follow.

APPROVED
Montgomery County
Historic Preservation Commission

REVIEWED
By Dan.Bruechert at 1:34 pm, Jul 11, 2023

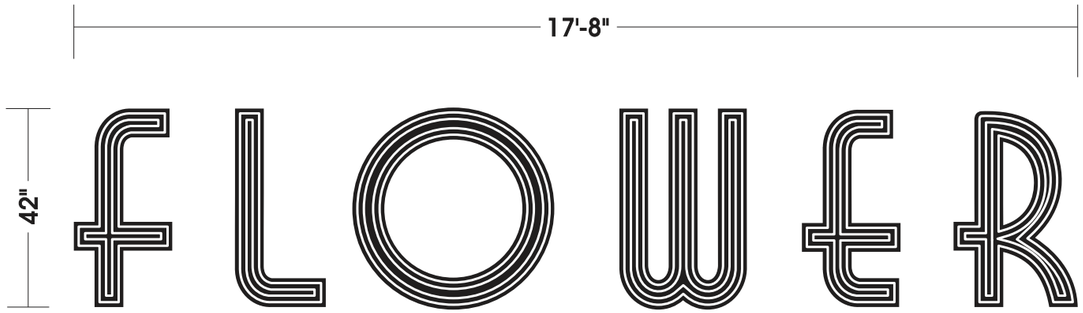

(1) set - Neon Lit Channel letters scale: 3/8"=1'

- white neon
- black trim & cans
- clear acrylic faces

62.56 sq st

REMOTE CHANNEL LETTER - SECTION NTS

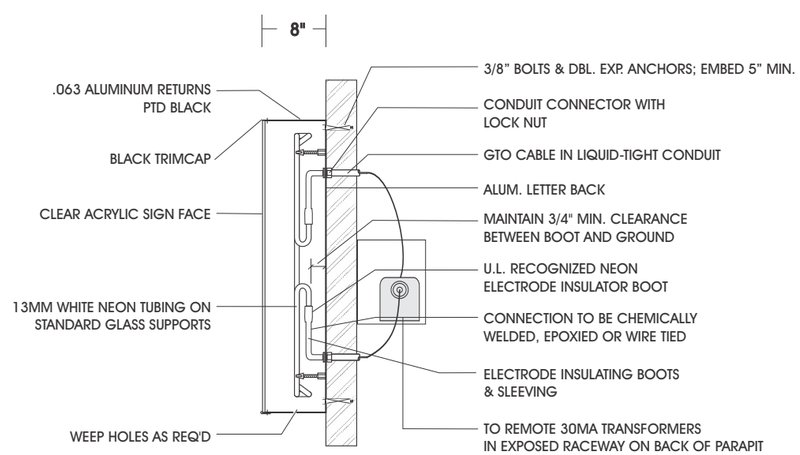

SCALE: 1/8"=1'

JackStoneSigns JACKSTONESIGNS.COM
3131 Pennsy Drive, Landover, MD 20785 / phone (301) 322-3323 / fax (301) 322-8407

CUSTOMER	Flower Theatre
ADDRESS	8725 Flower Ave
CITY	Silver Spring
STATE	MD 20901
FILE NAME	Flower Theatre_Silver Spring (ext pkg)

DWG. NO.	0000
SCALE	as noted
DATE	6/19/2023
DESIGNER	RMB
CONTACT	Rebecca

REVISIONS

REQUIRED ELECTRICAL SERVICE TO SIGN LOCATION IS TO BE PROVIDED BY OTHERS

Remote Neon Channel letters

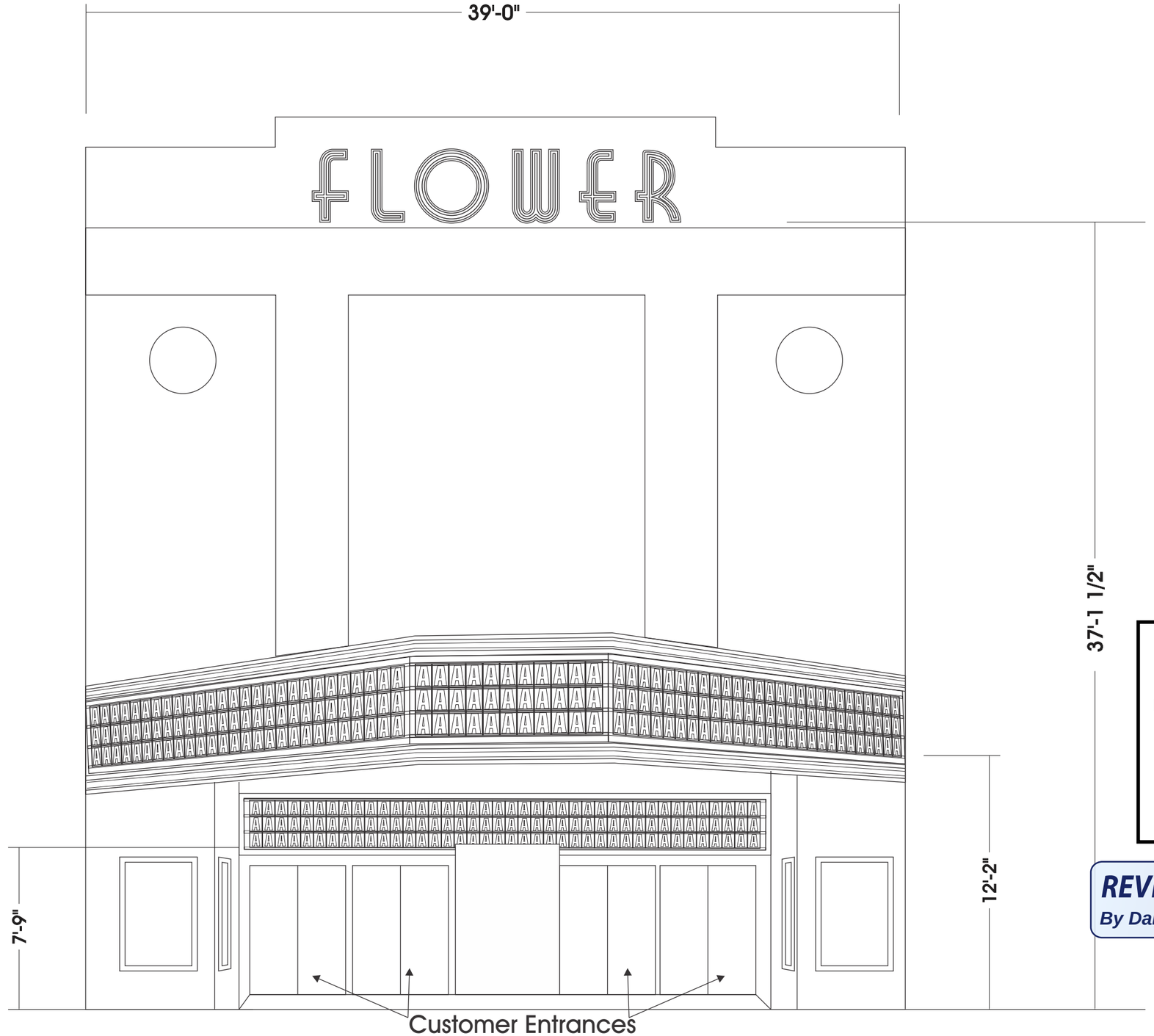

APPROVED
Montgomery County
Historic Preservation Commission

REVIEWED
By Dan.Bruechert at 1:34 pm, Jul 11, 2023

SCALE: 3/16"=1'

JackStoneSigns JACKSTONESIGNS.COM
3131 Pennsy Drive, Landover, MD 20785 / phone (301) 322-3323 / fax (301) 322-8407

CUSTOMER	Flower Theatre
ADDRESS	8725 Flower Ave
CITY	Silver Spring
STATE	MD 20901
FILE NAME	Flower Theatre_Silver Spring (ext pkg)

DWG. NO.	0000
SCALE	as noted
DATE	6/19/2023
DESIGNER	RMB
CONTACT	Rebecca

REVISIONS

REQUIRED ELECTRICAL SERVICE TO SIGN LOCATION IS TO BE PROVIDED BY OTHERS

New lexan sign faces with changeable copy in existing Marquee & over the door cabinet

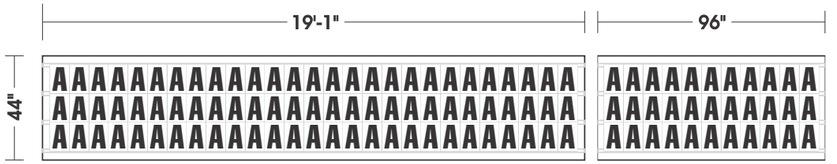

Qty: 2 Qty: 1 scale: 3/16"=1'

New lexan panels with tracking & Gemini pronto letters
Need FOUR 250 piece sets of the 8" on 10" Gemini pronto letters
Marquee panels

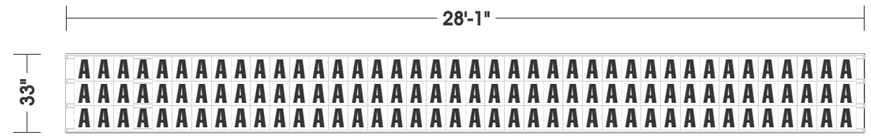

Qty: 1 scale: 3/16"=1'

New lexan panels with tracking & Gemini pronto letters
Need TWO 250 piece sets of the 8" on 10" Gemini pronto letters
over entry doors

APPROVED
Montgomery County
Historic Preservation Commission

REVIEWED
By Dan.Bruechert at 1:34 pm, Jul 11, 2023

Neon tubing in perimeter
2 lines each top & bottom

MARQUEE - SECTION NTS

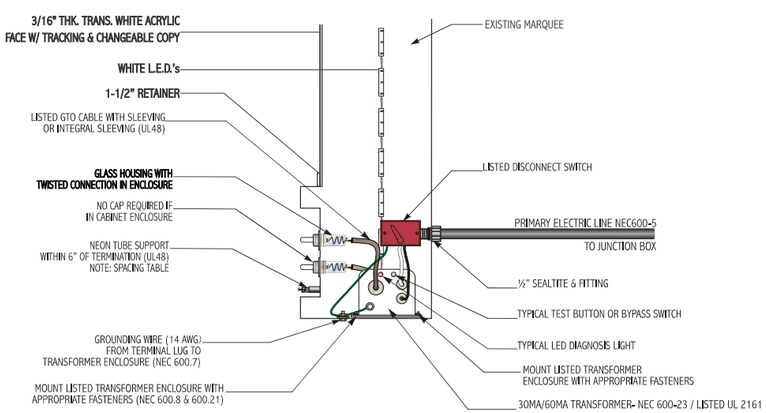

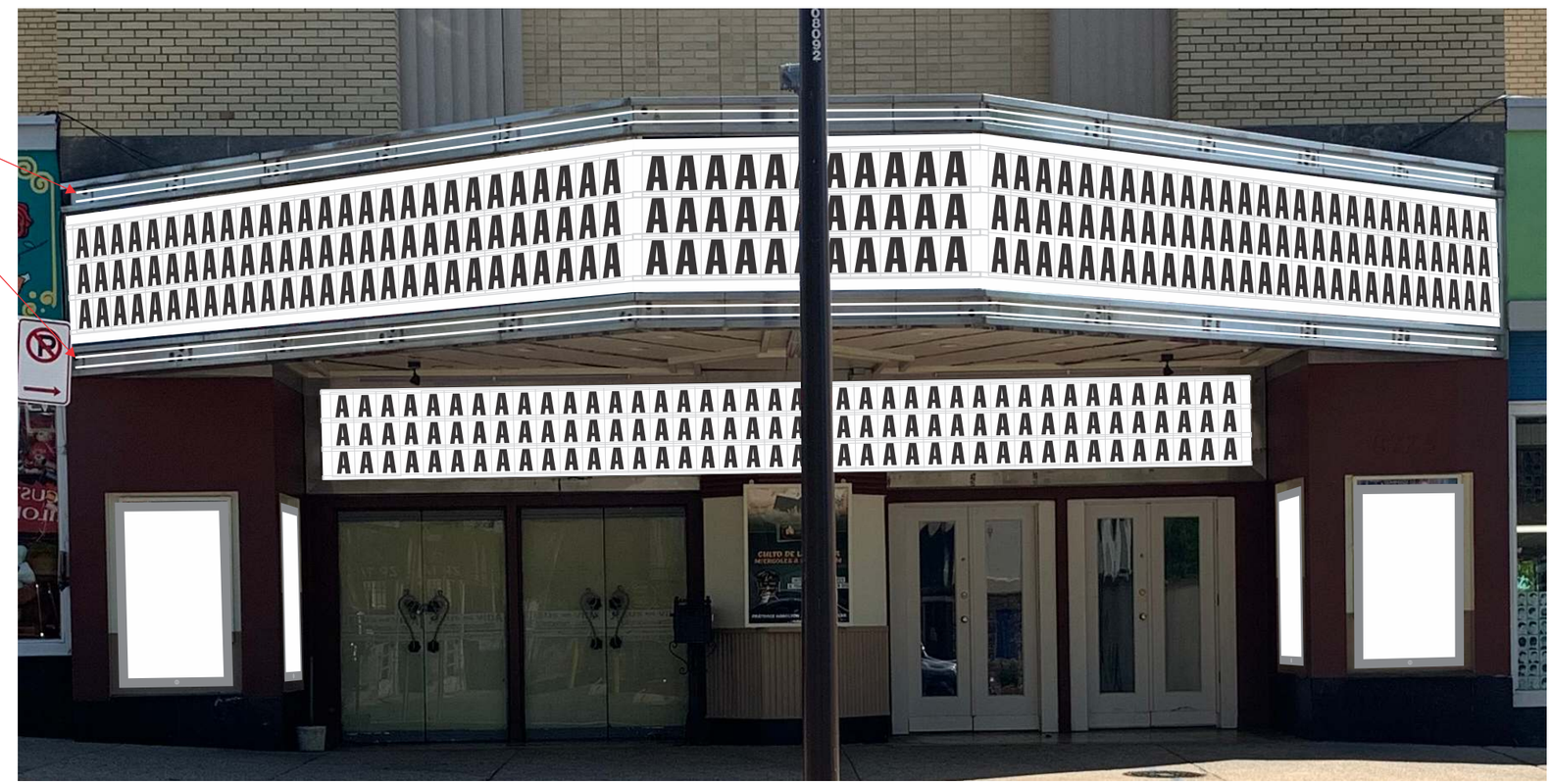

JackStoneSigns JACKSTONESIGNS.COM
3131 Pennsy Drive, Landover, MD 20785 / phone (301) 322-3323 / fax (301) 322-8407

CUSTOMER	Flower Theatre
ADDRESS	8725 Flower Ave
CITY	Silver Spring
STATE	MD 20901
FILE NAME	Flower Theatre_Silver Spring (ext pkg)

DWG. NO.	0000
SCALE	as noted
DATE	6/19/2023
DESIGNER	RMB
CONTACT	Rebecca

REVISIONS

REQUIRED ELECTRICAL SERVICE TO SIGN LOCATION IS TO BE PROVIDED BY OTHERS

Remote Neon Channel letters

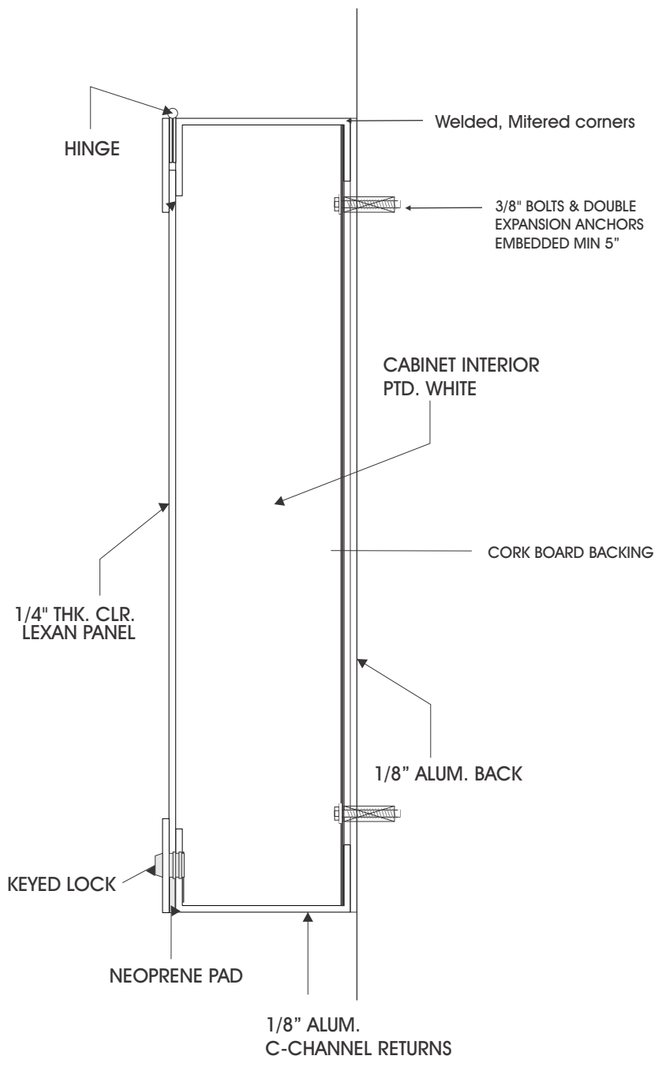

SECTION NTS

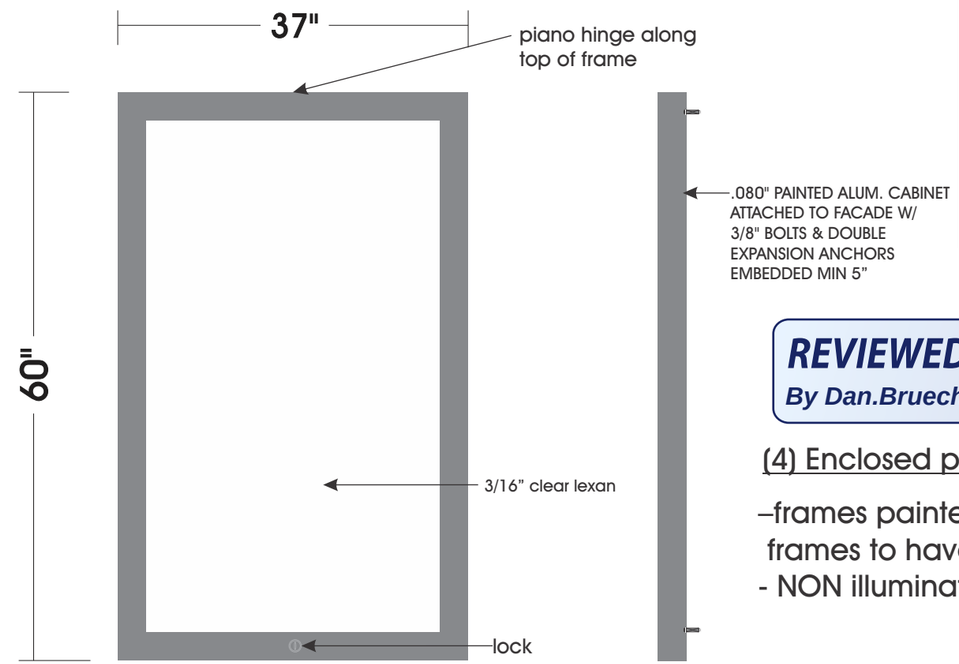

APPROVED
Montgomery County
Historic Preservation Commission

REVIEWED
By Dan.Bruechert at 1:33 pm, Jul 11, 2023

(4) Enclosed poster frames scale:3/4"=1'

–frames painted metallic silver
frames to have piano hinge door & lock
- NON illuminated

JackStoneSigns JACKSTONESIGNS.COM
3131 Pennsy Drive, Landover, MD 20785 / phone (301) 322-3323 / fax (301) 322-8407

CUSTOMER	Flower Theatre
ADDRESS	8725 Flower Ave
CITY	Silver Spring
STATE	MD 20901
FILE NAME	Flower Theatre_Silver Spring (ext pkg)

DWG. NO.	0000
SCALE	as noted
DATE	6/19/2023
DESIGNER	RMB
CONTACT	Rebecca

REVISIONS

REQUIRED ELECTRICAL SERVICE TO SIGN LOCATION IS TO BE PROVIDED BY OTHERS

Flower Theater Facade Rehabilitation Project

8725 Flower Ave,
Silver Spring, Maryland 20901

DONOHOE CONSTRUCTION

7101 Wisconsin Avenue, Suite 700
Bethesda, Maryland 20814
Phone: 202.333.0880

1st Submission Shop Drawings
July 7, 2023

APPROVED
Montgomery County
Historic Preservation Commission

REVIEWED
By Dan.Bruechert at 1:27 pm, Jul 11, 2023

ESA Loading Dock Modifications

DONOHOE
Integrity and Vision Since 1884

SUBMITTAL NO. 15-08800-0

- [x] **REVIEWED**
- [ ] **REJECTED**
- [ ] **APPROVED**
- [ ] **APPROVED AS NOTED**
- [ ] **REVISE & RESUBMIT**
- [ ] **FOR RECORD**

RVW'D BY: HUNTER GARDNER DATE: 7/7/2023

Submittal has been reviewed for general compliance with contract documents only. Contractor's approval does not supersede plans & specifications. Subcontractor / Supplier shall verify all dimensions, quantities, and conditions before proceeding with any part of this work.

SUBCONTRACTOR: Ridgeview Glass, Inc.

Ridgeview Glass Inc.
16000 Trade Zone Avenue, Suite 106
Upper Marlboro, MD 20774-8786
(301) 599-7200 (301) 599-0405

REVISIONS

NO.	DESCRIPTION	DATE

DONOHOE CONSTRUCTION
7101 Wisconsin Avenue, Suite 700
Bethesda, Maryland 20814
Phone: 202.333.0880

Flower Theater Facade Rehabilitation Project
8725 Flower Ave,
Silver Spring, Maryland 20901

Project 23-021	Sheet 1
Date July 7, 2023	
Scale	

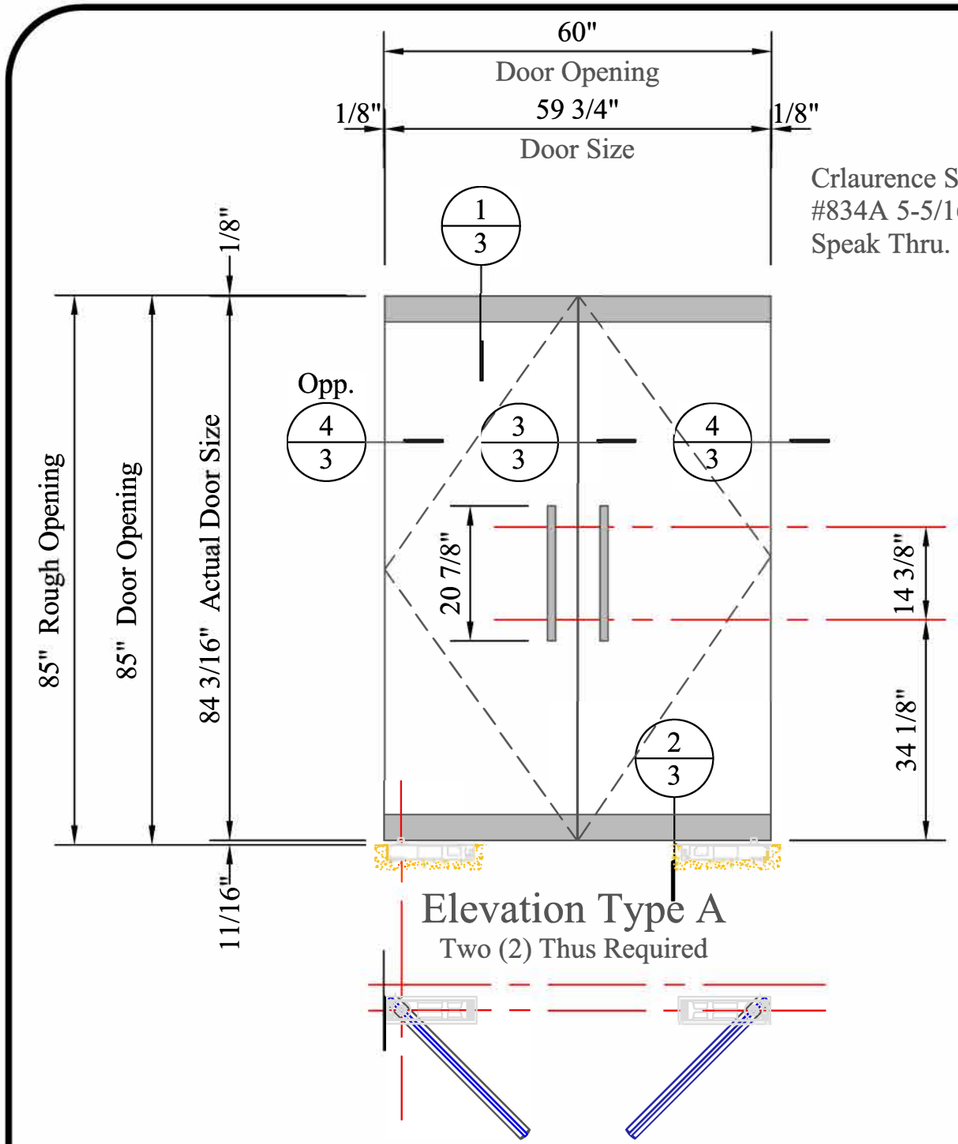

Elevation Type A
Two (2) Thus Required

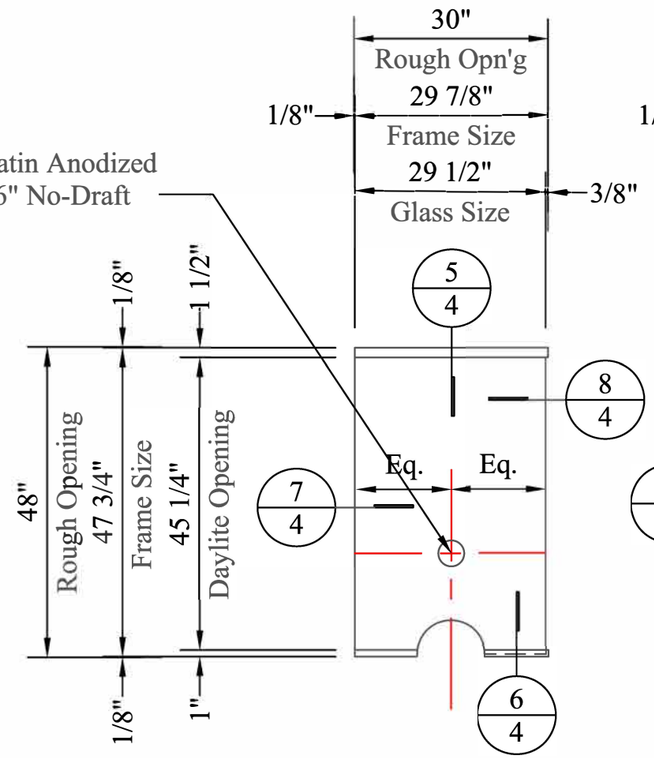

Elevation Type B
Two (2) Thus Required

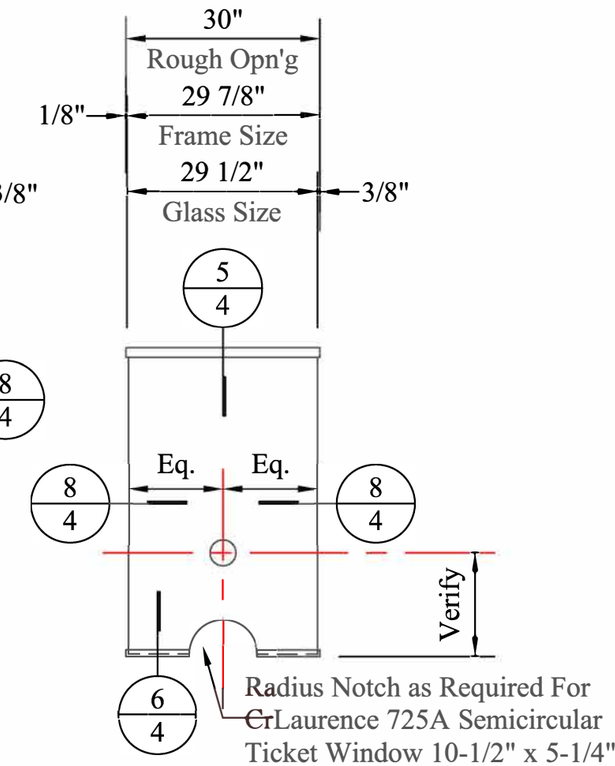

Elevation Type C
Three (3) Thus Required

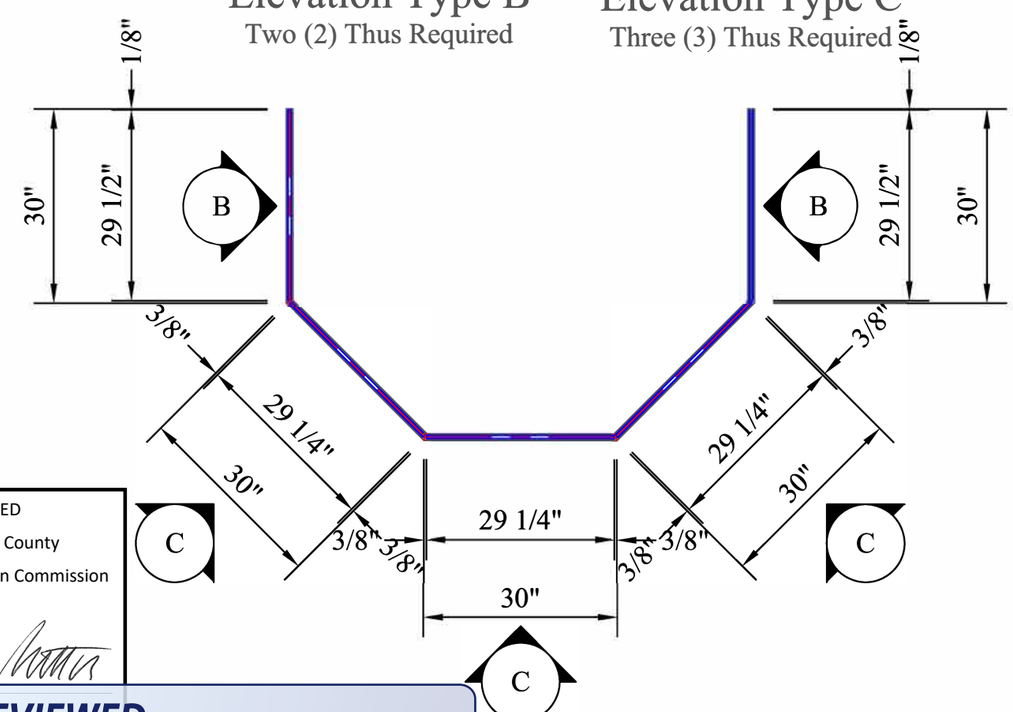

1/2" Clear Tempered All-Glass Doors with
4" Square Top and Bottom Rails with 1/4" x 2-1/4"
Applied Aluminum Plates (To simulate Existing) x
Clear Anodized Finish.
Hardware Included as Follows:
2 Ea. CrLaurence CA18 x 18PS Acrylic handles (Custom Modified)
2 Ea. OBE/Dorma Top Walking Beam Pivots
2 Ea. OBE/Dorma BTS80 Concealed Floor Closers
2 Ea. CrLaurence Bottom Rail Locks
2 Ea. CrLaurence Cylinders with Interior Thumbturns.
1 Ea. TH-43 1/2" x 4" Thresholds.

APPROVED
Montgomery County
Historic Preservation Commission

REVIEWED
By Dan.Bruechert at 1:28 pm, Jul 11, 2023

Ridgeview Glass Inc.
16000 Trade Zone Avenue, Suite 106
Upper Marlboro, MD 20774-8786
(301) 599-7200 (301) 599-0405

REVISIONS

NO.	DESCRIPTION	DATE

DONOHOE CONSTRUCTION
7101 Wisconsin Avenue, Suite 700
Bethesda, Maryland 20814
Phone: 202.333.0880

Flower Theater Facade Rehabilitation Project
8725 Flower Ave,
Silver Spring, Maryland 20901

Project 23-021
Date July 7, 2023
Scale
Sheet 2

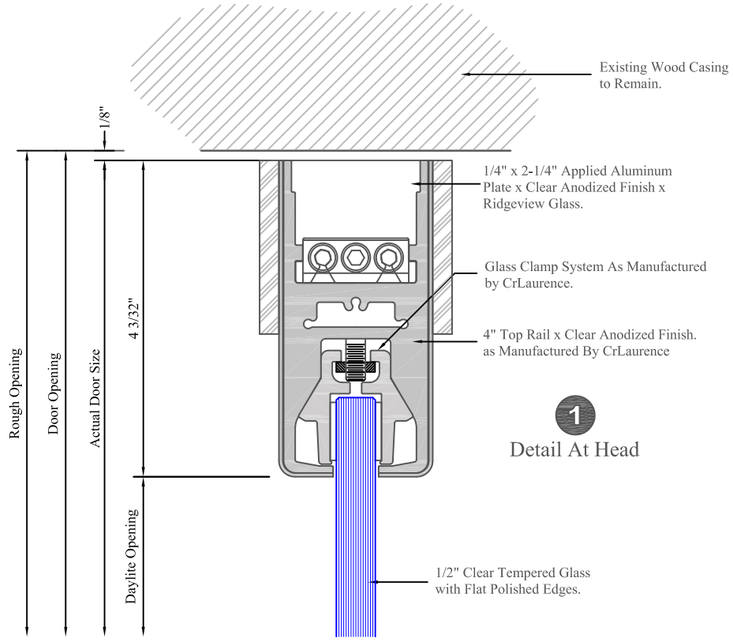

1
Detail At Head

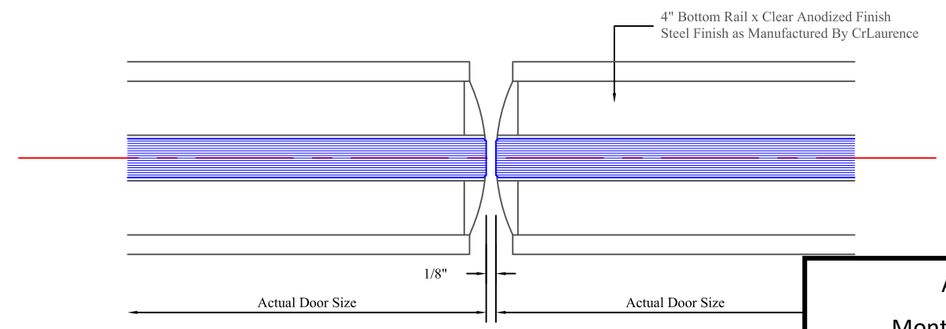

3
Detail at Meeting Stiles

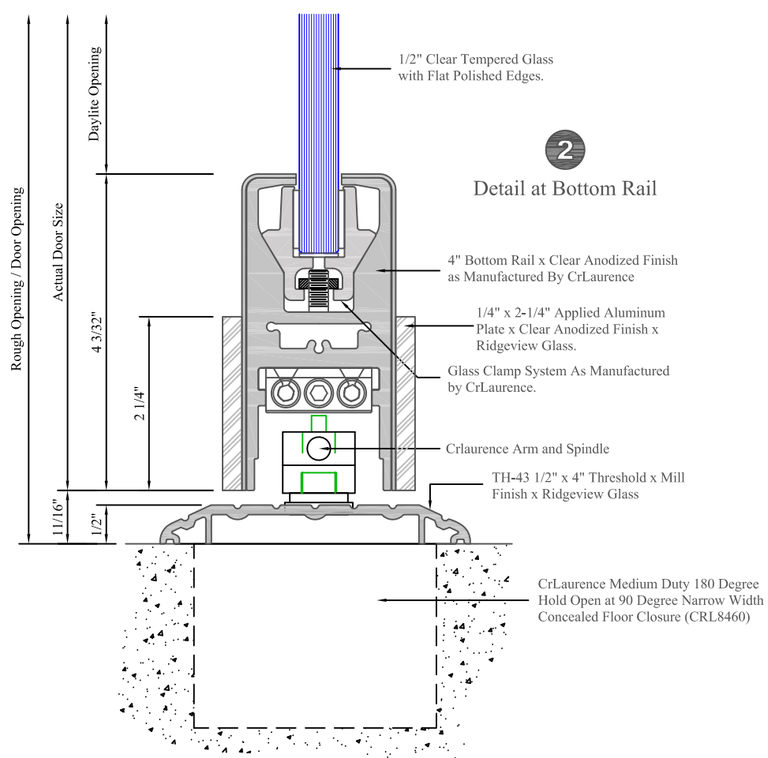

2
Detail at Bottom Rail

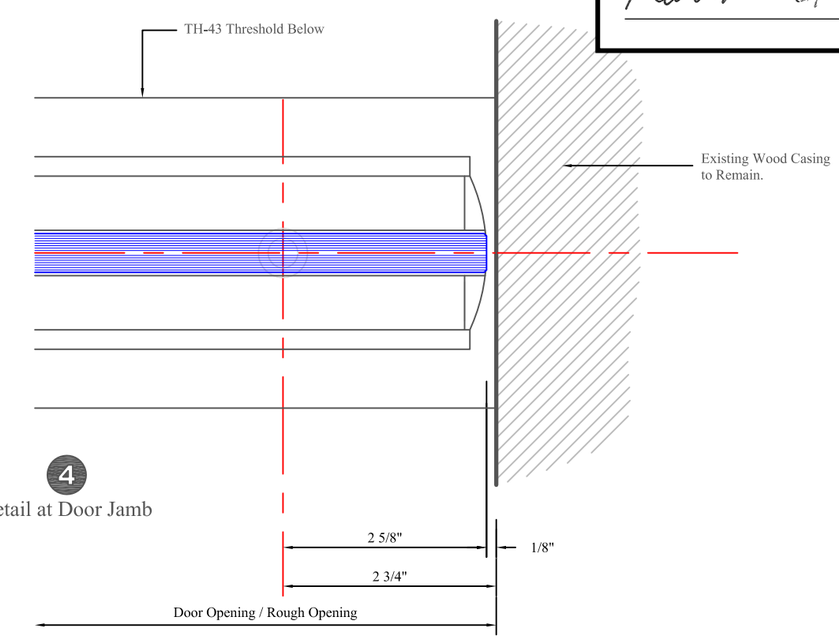

4
Detail at Door Jamb

APPROVED
Montgomery County
Historic Preservation Commission

REVIEWED
By Dan.Bruechert at 1:28 pm, Jul 11, 2023

Ridgeview Glass Inc.
16000 Trade Zone Avenue, Suite 106
Upper Marlboro, MD 20774-8786
(301) 599-7200 (301) 599-0405

NO.	DESCRIPTION	DATE

REVISIONS

DONOHOE CONSTRUCTION
7101 Wisconsin Avenue, Suite 700
Bethesda, Maryland 20814
Phone: 202.333.0880

Flower Theater Facade Rehabilitation Project
8725 Flower Ave,
Silver Spring, Maryland 20901

Project 23-021	Sheet 3
Date July 7, 2023	
Scale Full Size	

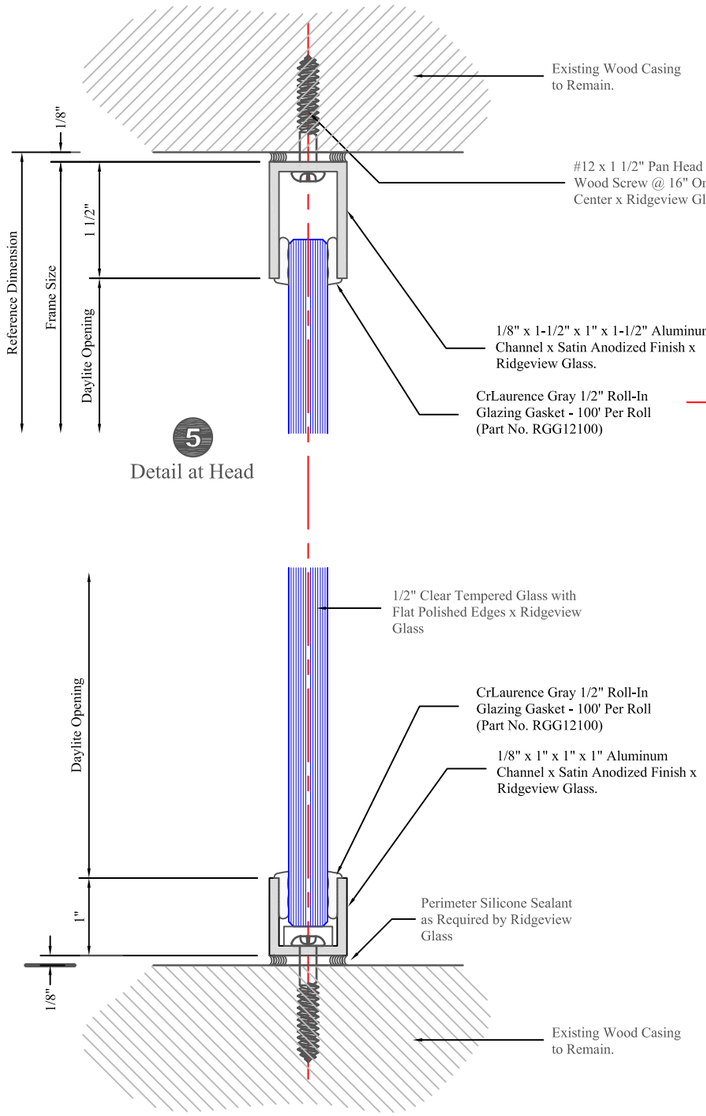

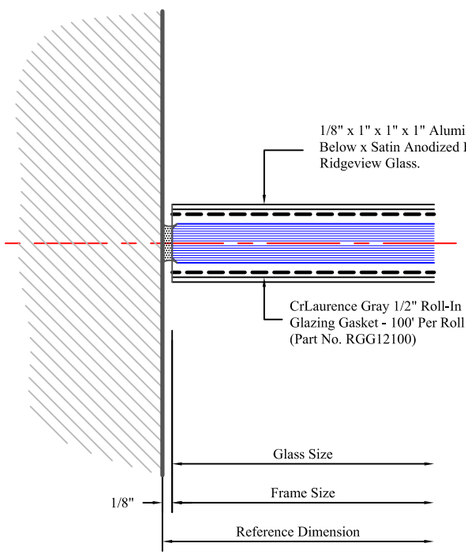

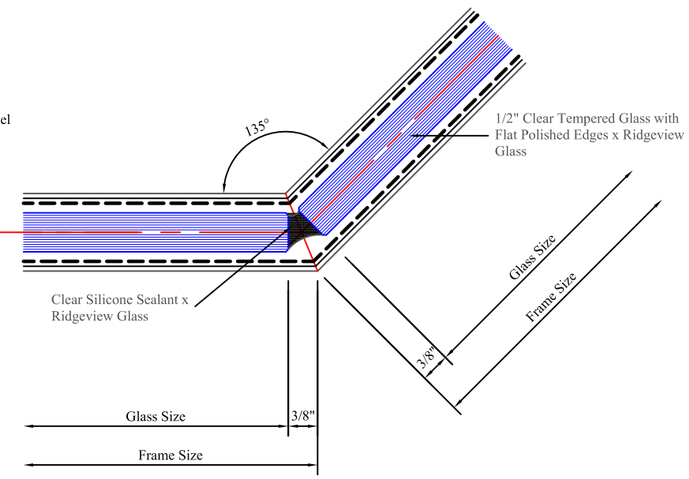

APPROVED

Montgomery County

Historic Preservation Commission

REVIEWED

By Dan.Bruechert at 1:28 pm, Jul 11, 2023

Ridgeview Glass Inc.
16000 Trade Zone Avenue, Suite 106
Upper Marlboro, MD 20774-8786
(301) 599-7200 (301) 599-0405

REVISIONS

NO.	DESCRIPTION	DATE

DONOHOE CONSTRUCTION
7101 Wisconsin Avenue, Suite 700
Bethesda, Maryland 20814
Phone: 202.333.0880

Flower Theater Facade Rehabilitation Project
8725 Flower Ave,
Silver Spring, Maryland 20901

Project 23-021	Sheet 4
Date July 7, 2023	
Scale Full Size	

Omni Hotel
Fort Worth
Fort Worth, Texas
Architect: HOK

heat-treated glass

APPROVED

Montgomery County

Historic Preservation Commission

REVIEWED

By Dan.Bruechert at 1:28 pm, Jul 11, 2023

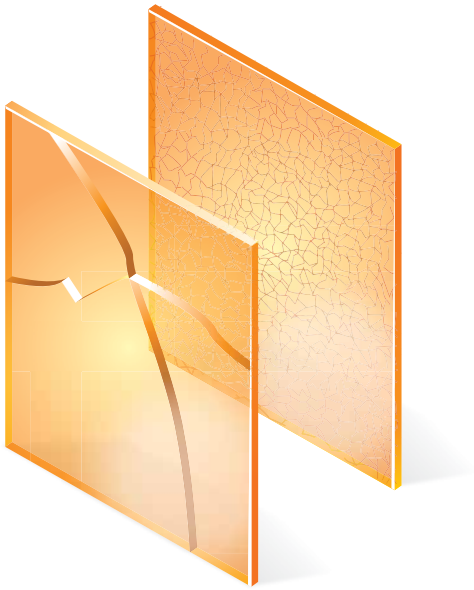

Heat-treated glass offers increased resistance to impact, wind loads and thermal stress breakage. Annealed glass is heated to approximately 1,150°F (621°C) and rapidly air-cooled to become heat-strengthened or fully tempered.

Heat-Treated Glass Applications

Heat-treated glass is used in a wide range of applications including:

- Patio and Storm Doors
- Entrance Doors and Sidelites
- Tub and Shower Enclosures
- Commercial/Residential Fixed and Operable Windows
- Displays
- Partitions
- Storefronts
- Handrails

Anaheim Convention Center
Anaheim, California
Architect: HOK

Oldcastle BuildingEnvelope™
2425 Olympic Boulevard ▪ Suite 525-East ▪ Santa Monica, CA 90404
1-866-OLDCASTLE (653-2278) ▪ oldcastlebe.com

Heat-Treated Glass

Introduction

"Heat-treated glass" is a general term used in the glass fabrication industry to describe glass that has been processed through a tempering oven to change its strength and breakage characteristics (i.e., the size and/or shape of the glass pieces after breakage). There are two distinct heat-treated products, heat-strengthened glass and fully tempered glass, as defined in ASTM C1048 Standard Specification for Heat-treated Flat Glass–Kind HS, Kind FT Coated and Uncoated Glass. Compared to annealed glass (non-heat-treated glass), both have increased strength to resist higher levels of impact, mechanical load and thermal stress. Heat-strengthening adds strength to the glass while limiting the change in its breakage characteristics. Tempered glass is stronger than heat-strengthened glass and significantly reduces the broken piece sizes to meet the safety glazing standards.

Description

Glass is heat-treated by heating annealed glass to a temperature of approximately 1,150°F (621°C), then rapidly cooling it. The glass is cooled by a carefully controlled airflow (also known as quenching), which uniformly cools all glass surfaces simultaneously. High airflow rates produce tempered glass and much lower airflow rates produce heat-strengthened glass.

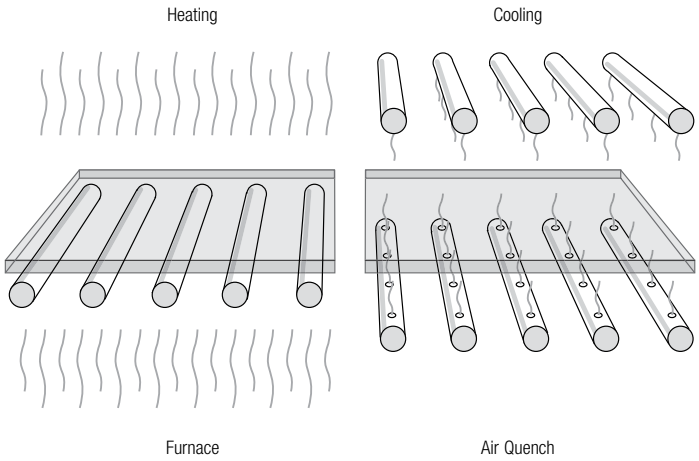

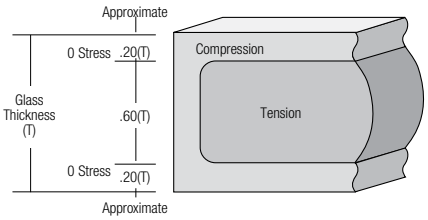

Cross-section of the compression and tension zones in tempered glass.

The cooling process places the surfaces of the glass in a state of high compression and the central core in a state of compensating tension.

Heat-Treated Glass

Description (continued)

Fully Tempered Glass

Fully tempered glass, normally referred to as just "tempered glass," is approximately four times stronger than annealed glass of the same thickness and configuration. When it is broken, tempered glass fractures into small fragments that reduce the probability of serious injury as compared to annealed glass. Tempered glass meets all safety glazing standards including the federal safety glazing standard, CPSC 16 CFR 1201. Because tempered glass fractures into many small pieces, it tends to vacate the opening, when broken, more than heat-strengthened and annealed glass does.

Heat-Strengthened Glass

Heat-strengthened glass is approximately twice as strong as annealed glass of similar thickness and configuration. Heat-strengthened glass generally fractures in a manner similar to annealed glass and tends to remain in the opening when broken. It is intended for general glazing where additional strength and/or resistance to mechanical and/or thermal stress are desired. Heat-strengthened glass is NOT a safety-glazing product and therefore should not be used where safety glazing is required.

Capabilities

Glass Options

Most architectural glass products can be heat-treated. Some patterned glass and decorative glass with a deep surface pattern may not be heat-treatable. Silk-screened and ceramic spandrel glass are always either heat-strengthened or tempered as part of their fabrication process. When spandrel glass is incorporated into insulating glass units, both lites must be heat-treated. Heat-absorbing glasses, such as tints, reflective glasses and some Low-E glass, may require heat treatment to reduce the probability of thermal-stress breakage, especially when used as part of an insulating glass unit.

For a list of available glass products/colors, go to the Glass Options Tab.

For more information on silk-screened, spandrel glass and insulating glass products, go to their respective Product Information Tabs.

For monolithic glass performance data, log on to www.oldcastlebe.com and choose GlasSelect™.

Thickness

Glass thicknesses from 1/8" through 3/4" can be tempered. Glass thicknesses from 1/8" through 1/4" are commonly heat-strengthened. And 3/8" can be heat-strengthened on a limited and project-specific basis.

Size

The minimum and maximum heat-treated glass sizes are restricted by the thickness of the glass and production equipment capabilities. Generally, the minimum size is 12" in width and length, and the maximum width and length are 84" x 144", respectively. Specific oversize ovens are able to process some glass types up to 98" in width and 200" in length.

Oldcastle BuildingEnvelope™
2425 Olympic Boulevard ▪ Suite 525-East ▪ Santa Monica, CA 90404
1-866-OLDCASTLE (653-2278) ▪ oldcastlebe.com

Heat-Treated Glass

Applications

Heat-Strengthened

Due to its superior glass retention properties, heat-strengthened glass is the preferred heat-treated glass product for applications where additional strength is needed to meet mechanical loads (wind or snow) or thermal loads caused by certain tinted or coated glasses. Heat-strengthened glass is widely used in laminated glass for additional strength, such as in overhead and sloped glazing. Heat-strengthened glass cannot be used in any safety glazing applications.

See the Glass Selector Tab for some typical applications.

Tempered

Tempered glass is used when the strength requirements exceed the capabilities of heat-strengthened glass, and for all safety glazing applications. Tempered glass is commonly used in sliding doors, storm doors, atriums, partitions, windows, storefronts, display cases, bath and shower enclosures and all-glass doors and entrances. Tempered glass should not be installed in areas where it is exposed to temperatures greater than approximately 400°F because it will begin to lose its degree of temper (reverting back to annealed glass).

Characteristics

Properties Unaffected by Heat-Treating

The color, chemical composition and light transmission characteristics of glass remain unchanged after the heat-treating process. The physical properties of glass, such as the compressive strength, hardness, specific gravity, the softening point, thermal conductivity, solar transmittance, stiffness and expansion coefficient, also remain unchanged.

Deflection

It is important to note that heat-treating does not change the deflection characteristics of glass. In many cases, even though thinner heat-treated glass may be strong enough for a specific application, thicker glass may need to be specified in order to reduce the amount of glass deflection. The project design professional establishes the maximum allowable deflection, as well as the design loads, on a project. Given a specific glass size and the design load, Oldcastle BuildingEnvelope™ can determine if the glass will meet the specified maximum deflection requirement.

Breakage Characteristics

The higher the amount of residual stress in a piece of glass, the smaller the particle size will be when the glass fractures. When annealed glass fractures, the cracks are far apart and the pieces are normally quite large with sharp edges. As a result of the heat-treating process, tempered glass fractures into small particles when broken, thus meeting the safety glazing requirements of the federal safety glazing standard, CPSC 16 CFR 1201, the Canadian safety glazing standard CAN/CGSB-12.1 and the American National Standard, ANSI Z97.1. These safety glazing standards require the ten largest particles of the test specimen to weigh no more than the equivalent weight of 10 sq. in. of glass thickness. The breakage characteristics of heat-strengthened glass can vary within the allowable stress range of the product (3,500 to 7,500 psi surface compression). Heat-strengthened glass typically fractures into large pieces that are more similar to annealed glass than to tempered glass.

Fabrication

Fabrication work such as cutting, polishing, grinding, drilling, notching, sandblasting, etching or any other process that modifies the glass must be completed prior to heat-treating the glass. ASTM C1048 provides specific limitations and requirements for the size and location of holes and notches. Any fabrication process completed after the glass is heat-treated, such as sandblasting or V-grooving, will reduce the strength of the glass.

Heat-Treated Glass

Characteristics (continued)

Roller Wave Distortion in Heat-Treated Glass

Since the glass is heat-treated in a horizontal oven, it contains waves created by contact with ceramic rolls during the heating process. This waviness, or roller wave distortion, can be detected when viewing reflected images from a distance. To minimize the appearance of roller wave distortion, the glass orientation in the oven becomes critical. When the direction of roller waves is critical, roller waves are typically specified and ordered parallel to the horizontal (sill) or base dimension.

Flatness

Due to the nature of the heat-treating process, heat-strengthened and tempered glass is not as flat as annealed glass. The deviation for flatness depends on glass thickness, width and length and other factors. ASTM C1048 contains information on the permissible overall bow and warp, and on localized warp.

Strain Pattern

Heat-treated glass may display visible strain patterns, also known as quench marks. These appear as geometric patterns of iridescence or darkish shadows. The strain pattern may appear under certain lighting conditions, particularly in the presence of polarized light. This phenomenon is a result of localized stresses imparted by the rapid air-cooling (quenching) of the heat-treating process. This strain pattern is an inherent characteristic of heat-treated glass and is not considered a defect.

Thermal Shock Resistance

Heat-treated glass will withstand greater thermal shock than the same thickness and configuration of annealed glass. Thermal shock results when a rapid temperature change between the surface and core of the glass occurs. When this temperature differential is of sufficient magnitude, the glass will fracture. To fracture 1/4" (6 mm) annealed glass, the average temperature differential would be approximately 100°F (38°C). To fracture 1/4" (6 mm) heat-strengthened and tempered glass, the average temperature differential would be about 250°F (121°C) and 400°F (204°C), respectively. The resistance to thermal shock also decreases with increased glass thickness.

Additional Important Information

Specifications

A sample Section 08 81 00 Specification for North America can be found in the last section of this binder titled: Sample Architectural Glass Specifications.

Contact Us

For any additional information, including details, technical data, specifications, technical assistance and samples, call 1-866-OLDCASTLE (653-2278).

Visit Us on the Web

Log on to www.oldcastlebe.com for project photos, product colors, general inquiries and project assistance.

To view performance data on a wide range of glass make-ups, or to build your own product specification, log on to www.oldcastlebe.com and choose GlasSelect®.

Oldcastle BuildingEnvelope™
2425 Olympic Boulevard ▪ Suite 525-East ▪ Santa Monica, CA 90404
1-866-OLDCASTLE (653-2278) ▪ oldcastlebe.com

All-Glass Entrance Systems—
engineered to allow architects and designers extraordinary design flexibility

all glass entrance systems

Our All-Glass entrance systems grace some of North America's most prominent buildings. They are also designed to provide clean, unobtrusive lines and are available in many configurations and finishes to complement virtually any surrounding surface. Entrances can be incorporated into our structural glass systems using patch fittings to assemble side lites, transoms and stabilizer supports, or as part of our exclusive Stackwall® system.

Jackson National Life, Lansing, MI
Architect: Smith, Hinchman & Grylis Associates

Glass Entrance Systems

Oldcastle BuildingEnvelope™ entrance systems can employ swinging or sliding doors, as well as stacking or bifold panels. Many variations are available with Oldcastle BuildingEnvelope™ tempered glass entry doors. They can be used with corner patches only, with continuous rails only, or in combinations of the two, which allow for several possibilities.

Applications

- Malls, Hotels, Office Buildings
- Interior Store Entrances
- Airports, Museums, Sports Arenas

REVIEWED
By Dan.Bruechert at 1:28 pm, Jul 11, 2023

APPROVED
Montgomery County
Historic Preservation Commission

Door Sizes
Doors up to 10' high can be fabricated to your specifications and requirements.

Glass Thickness
3/8", 1/2", 5/8" or 3/4"

Pivot Distance
Typical pivot distance is
2-3/4" from the edge of a
BuildingEnvelope™ locati

Edgework
All exposed glass edges will be polished. Flat polish is standard edgework for Oldcastle BuildingEnvelope™.

Details

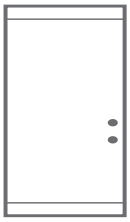

P Style
Continuous top and bottom rails

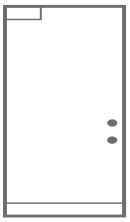

BP Style
Continuous bottom rail with top pivot patch fitting

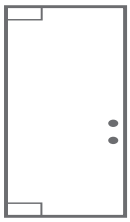

A Style
Patch fittings at pivot corners

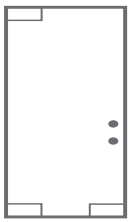

F Style
Patch fittings at top and bottom and a lock patch at the leading edge of the door

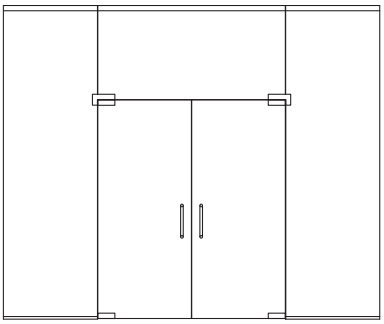

Elevation (style A)

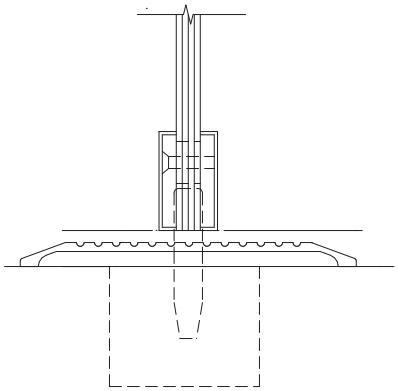

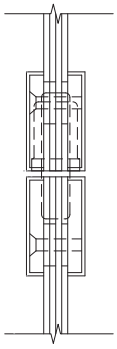

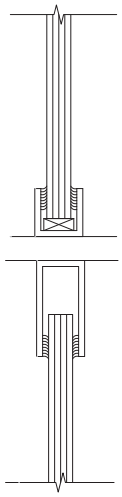

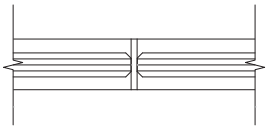

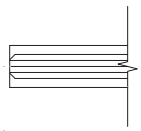

Hardware: Center-Hung Pivots

Top-Pivot Walking Beam

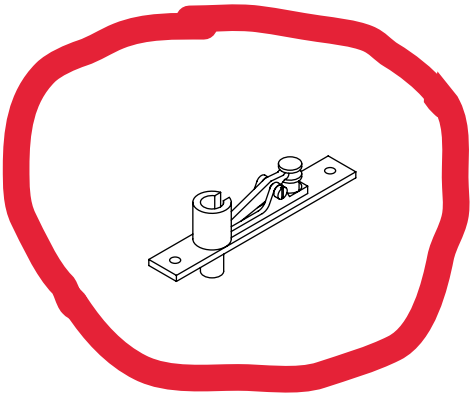

Function
Provides top pivot for center-pivoted, all-glass doors.

APPROVED
Montgomery County
Historic Preservation Commission

Bottom-Pivot-Floor or Threshold

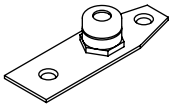

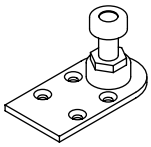

Functio
Provides
pivoted, a

REVIEWED
By Dan.Bruechert at 1:28 pm, Jul 11, 2023

OBE-11500 Bottom Pivot

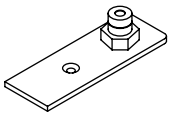

Function
Provides a height-adjustable bottom pivot for all-glass doors that need a larger clearance due to special finished floor conditions.

Oldcastle BuildingEnvelope™
2425 Olympic Boulevard ▪ Suite 525-East ▪ Santa Monica, CA 90404
1-866-OLDCASTLE (653-2278) ▪ oldcastlebe.com

Hardware: Closers

Floor Closer

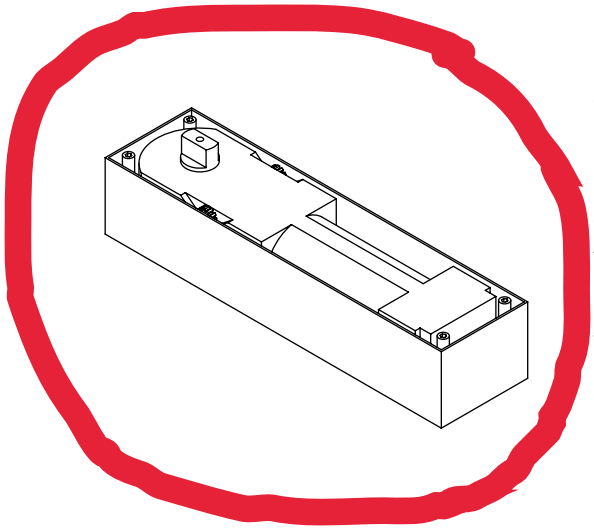

Function
Provides a hydraulically controlled, center-pivoted, single- or double-acting door operation or an offset-pivoted, single-acting operation.

Operation
Includes door-centering adjustment to simplify door alignment. One-screw adjustment of latching speed. Available with extended spindles from the factory for heavy-duty reliability.

Specifications
Maximum door size and weight:
(See Table 3, page 13 for further size limitations.)

90° or 105°
Hold-open or no-hold-open available.

Backcheck is available, subject to ADA Code restrictions. Check with local code authorities.

APPROVED

Montgomery County

Historic Preservation Commission

Overhead Closer

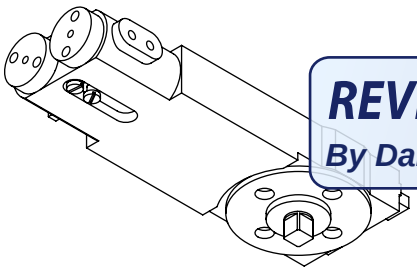

REVIEWED
By Dan.Bruechert at 1:28 pm, Jul 11, 2023

90° or 105°
Hold-open or no-hold-open available.

Backcheck is available, subject to ADA Code restrictions. Check with local code authorities.

For specific applications, call 1-866-OLDCASTLE(653-2278) or log on to www.oldcastlebe.com.

Hardware: Offset Pivots/Standard Locks

Top Offset Pivot

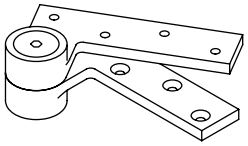

APPROVED

Montgomery County

Historic Preservation Commission

Bottom Offset Pivot Arm

REVIEWED

By Dan.Bruechert at 1:28 pm, Jul 11, 2023

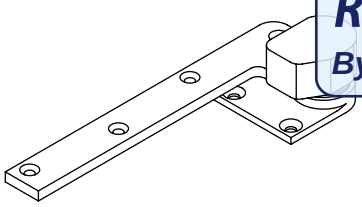

Function

Provides a bottom pivot for full-rail all-glass doors [illegible] or floor closers are used.

Finishes

US-3, US-4, US-10B, US-26, US-26D

For specific hardware details, call 1-866-OLDCASTLE(653-2278) or log on to www.oldcastlebe.com.

LL05 Bottom Rail Lock with Round Bolt

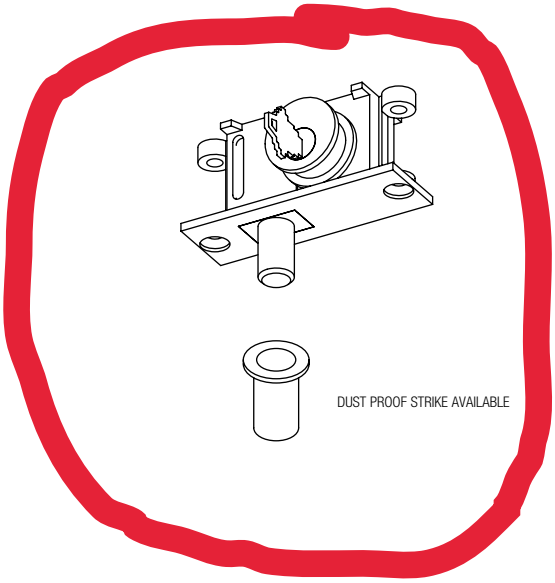

Function

Provides security on entrance doors. Locks may be activated with cylinders and/or thumb turns. Locks can have cylinder guards and/or lock indicators. Cylinders and/or thumb turns may be changed without removing the doors.

Finishes

Cylinders can be finished to match rails.

Specifications

A solid brass body construction with a steel pin in the bolt. A round bolt with a 1-3/32" straight throw.

Cylinder guards and exit indicators are optional.

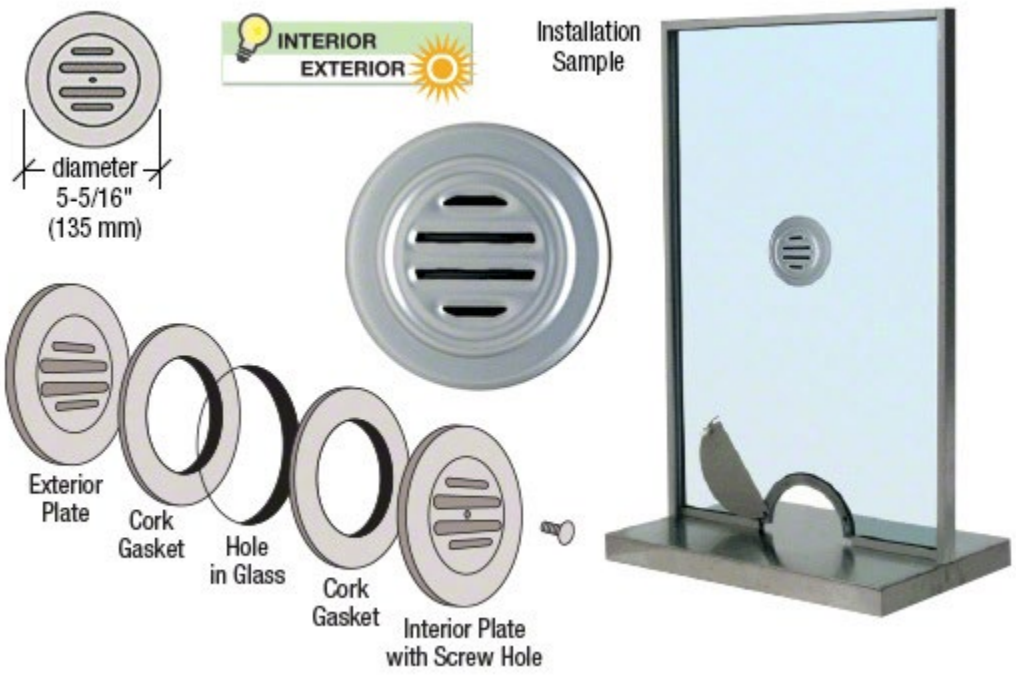

APPROVED

Montgomery County

Historic Preservation Commission

REVIEWED

By Dan.Bruechert at 1:28 pm, Jul 11, 2023

APPROVED

Montgomery County

Historic Preservation Commission

REVIEWED

By Dan.Bruechert at 1:29 pm, Jul 11, 2023

CRL 24-1/2” OVERALL LENGTH GLASS MOUNTED LADDER STYLE PULL HANDLE WITH ACRYLIC SEMI-INSERTS

CAT. NO.
CA18X18

INCLUDED MOUNTING HARDWARE

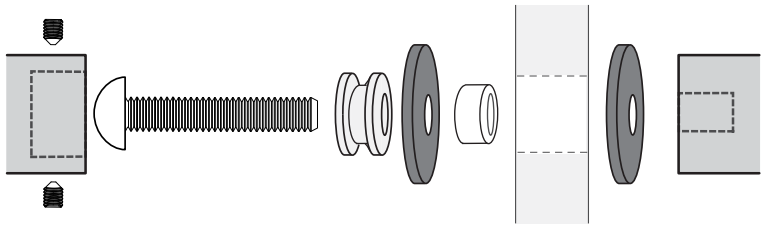

M8-1.25 Back-to-Back
Glass Door Mount Shown

MOUNTING TEMPLATE

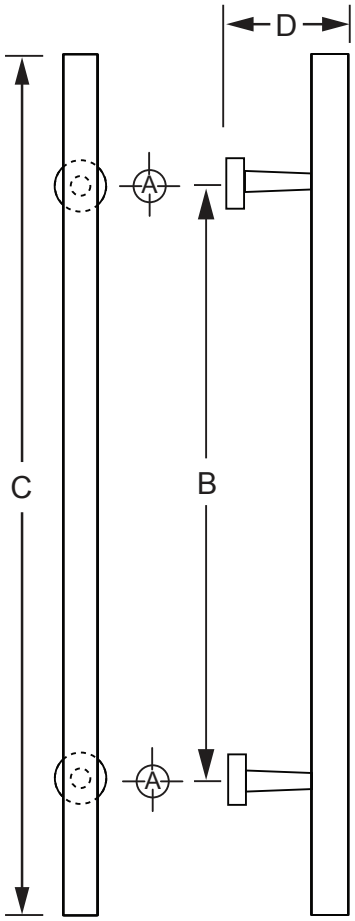

RGI shop modify handle to:
14 3/8"centers (Dimension "B")
20 7/8" OD (Dimension "C")

APPROVED
Montgomery County
Historic Preservation Commission

REVIEWED
By Dan.Bruechert at 1:29 pm, Jul 11, 2023

ADD TO CAT. NO. FOR FINISH
BR = POLISHED BRASS
PS = POLISHED STAINLESS

Hole Size: A		B	C	D
Glass 5/8” (16 mm)	Wood/Aluminum 5/16” (8 mm)	18” (457 mm)	24-1/2” (622 mm)	2-11/16” (58.7 mm)

Mounting Options	Glass 3/8”-3/4” (10-19 mm)	Wood/Aluminum up to 1-3/4” (45 mm)
Mounting Hardware	Included	Included

NOTE: Optional hardware kits must be purchased separately.

Flower Theater Facade Rehabilitation Project

8725 Flower Ave,
Silver Spring, Maryland 20901

DONOHOE CONSTRUCTION

7101 Wisconsin Avenue, Suite 700
Bethesda, Maryland 20814
Phone: 202.333.0880

1st Submission Shop Drawings
July 7, 2023

APPROVED
Montgomery County
Historic Preservation Commission

REVIEWED
By Dan.Bruechert at 1:33 pm, Jul 11, 2023

ESA Loading Dock Modifications

DONOHOE
Integrity and Vision Since 1884

SUBMITTAL NO. 16-08800-0

- [x] **REVIEWED**
- [ ] **REJECTED**
- [ ] **APPROVED**
- [ ] **APPROVED AS NOTED**
- [ ] **REVISE & RESUBMIT**
- [ ] **FOR RECORD**

RVW'D BY: HUNTER GARDNER DATE: 7/7/2023

Submittal has been reviewed for general compliance with contract documents only. Contractor's approval does not supersede plans & specifications. Subcontractor / Supplier shall verify all dimensions, quantities, and conditions before proceeding with any part of this work.

SUBCONTRACTOR: Ridgeview Glass, Inc.

Ridgeview Glass Inc.
16000 Trade Zone Avenue, Suite 106
Upper Marlboro, MD 20774-8786
(301) 599-7200 (301) 599-0405

REVISIONS

NO.	DESCRIPTION	DATE

DONOHOE CONSTRUCTION
7101 Wisconsin Avenue, Suite 700
Bethesda, Maryland 20814
Phone: 202.333.0880

Flower Theater Facade Rehabilitation Project
8725 Flower Ave,
Silver Spring, Maryland 20901

Project 23-021	Sheet 1
Date July 7, 2023	
Scale	

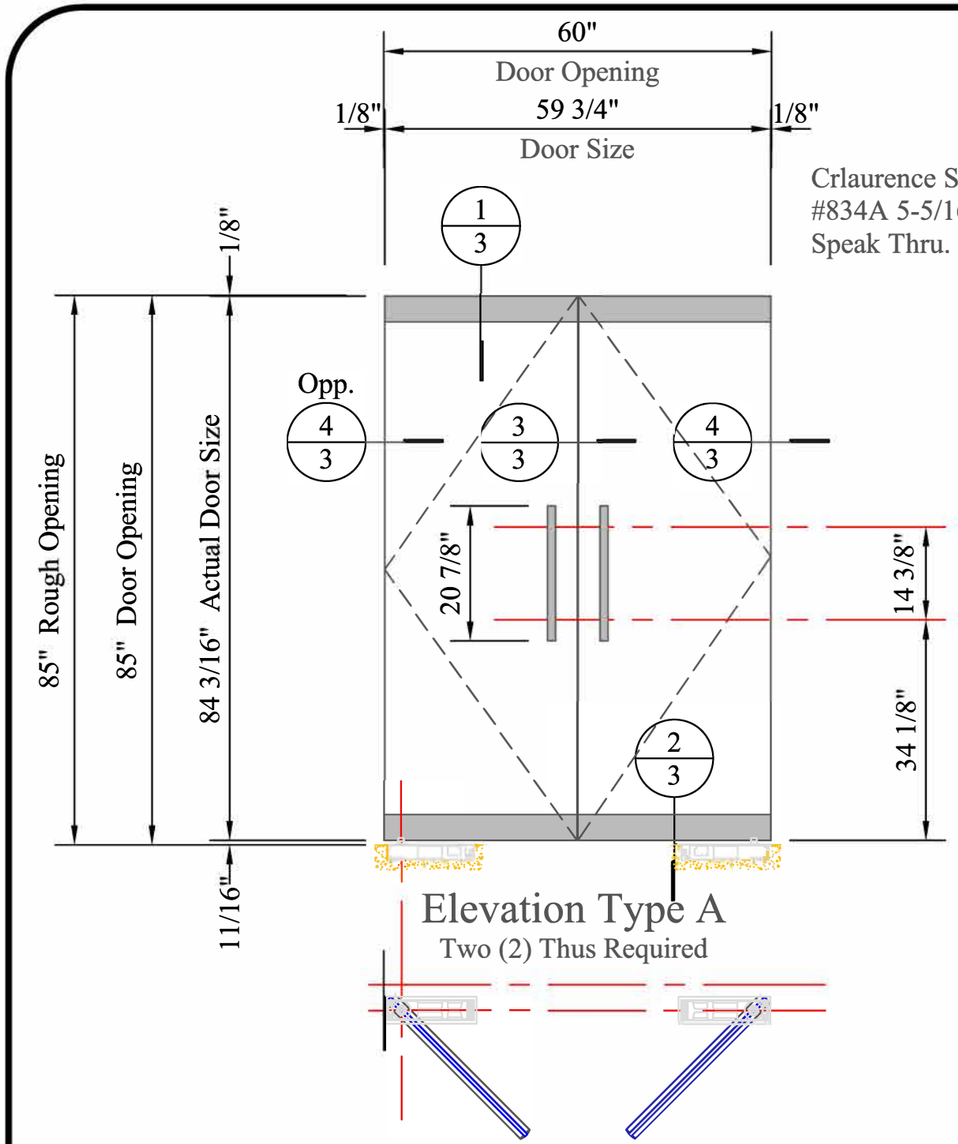

Elevation Type A
Two (2) Thus Required

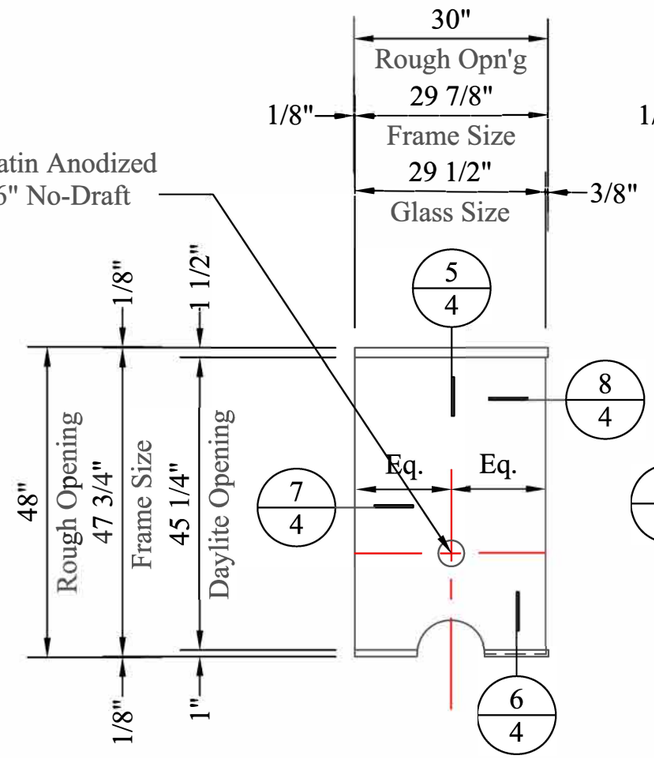

Elevation Type B
Two (2) Thus Required

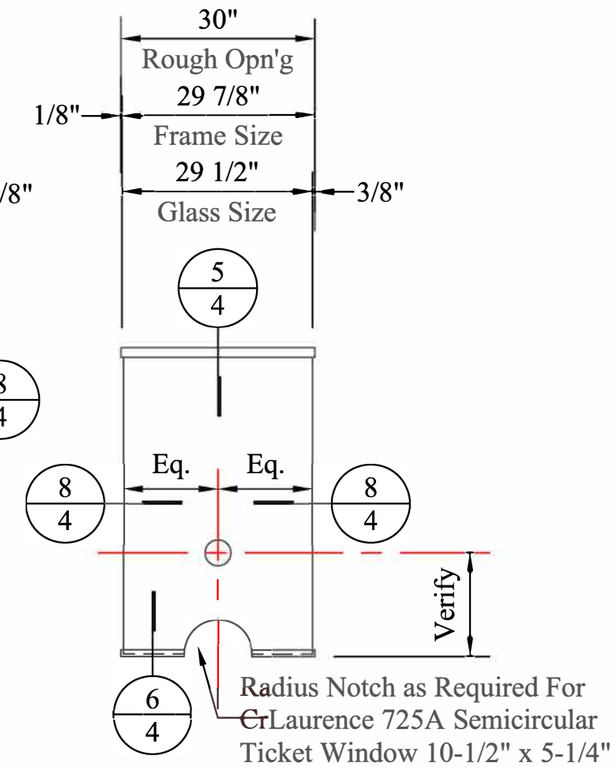

Elevation Type C
Three (3) Thus Required

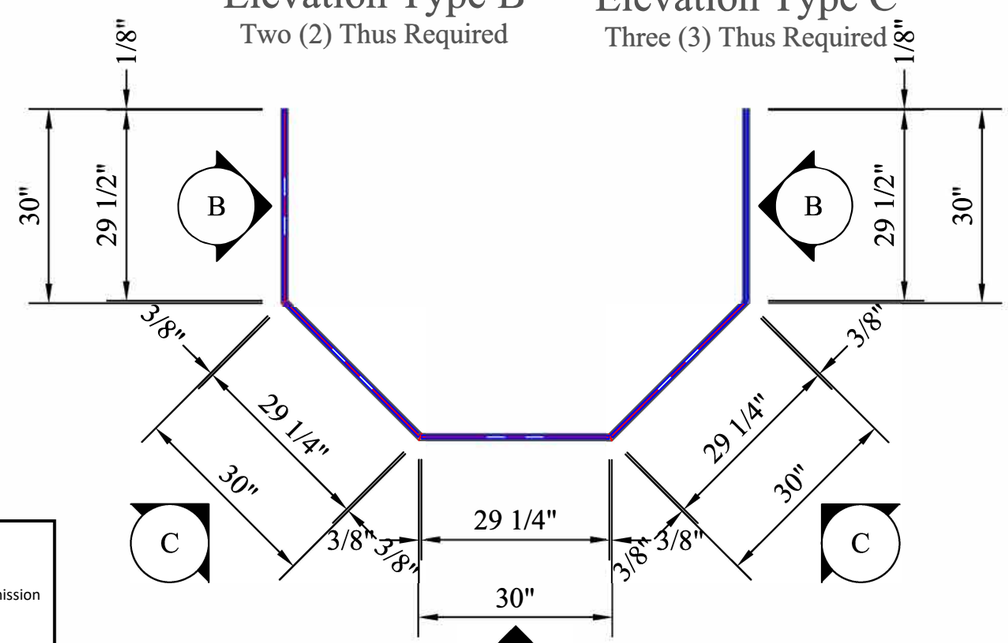

1/2" Clear Tempered All-Glass Doors with
4" Square Top and Bottom Rails with 1/4" x 2-1/4"
Applied Aluminum Plates (To simulate Existing) x
Clear Anodized Finish.
Hardware Included as Follows:
2 Ea. CrLaurence CA18 x 18PS Acrylic handles (Custom Modified)
2 Ea. OBE/Dorma Top Walking Beam Pivots
2 Ea. OBE/Dorma BTS80 Concealed Floor Closers
2 Ea. CrLaurence Bottom Rail Locks
2 Ea. CrLaurence Cylinders with Interior Thumbturns.
1 Ea. TH-43 1/2" x 4" Thresholds.

APPROVED
Montgomery County
Historic Preservation Commission

REVIEWED
By Dan.Bruechert at 1:33 pm, Jul 11, 2023

Ridgeview Glass Inc.
16000 Trade Zone Avenue, Suite 106
Upper Marlboro, MD 20774-8786
(301) 599-7200 (301) 599-0405

NO.	DESCRIPTION	DATE

REVISIONS

DONOHOE CONSTRUCTION
7101 Wisconsin Avenue, Suite 700
Bethesda, Maryland 20814
Phone: 202.333.0880

Flower Theater Facade Rehabilitation Project
8725 Flower Ave,
Silver Spring, Maryland 20901

Project 23-021
Date July 7, 2023
Scale
Sheet 2

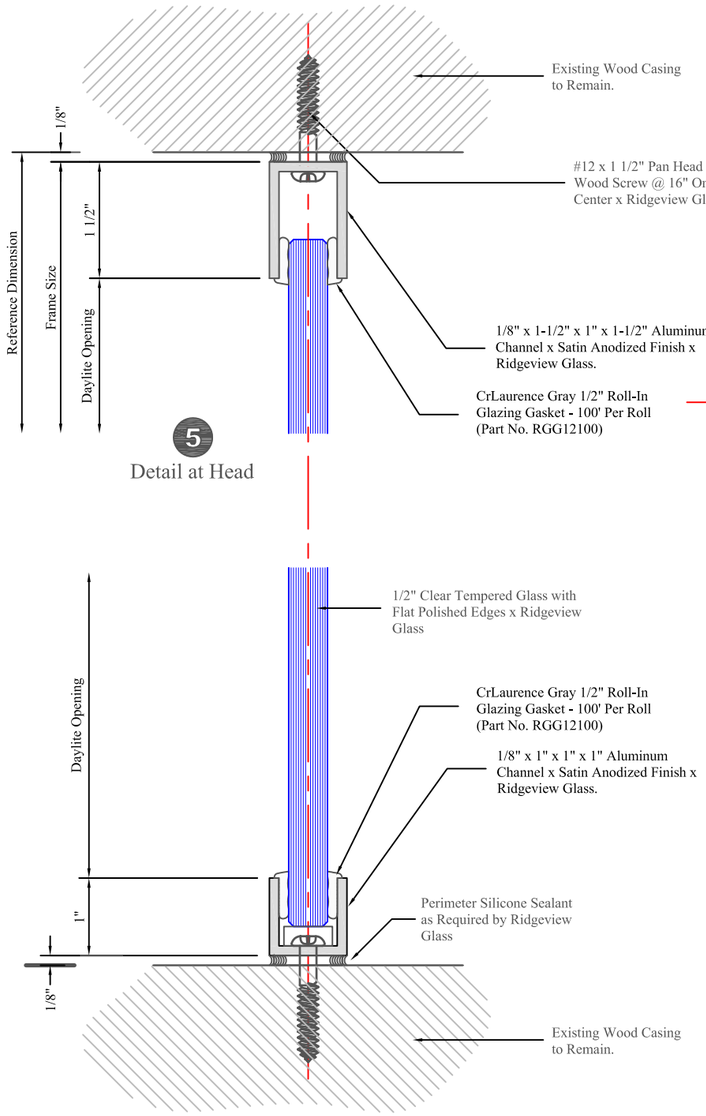

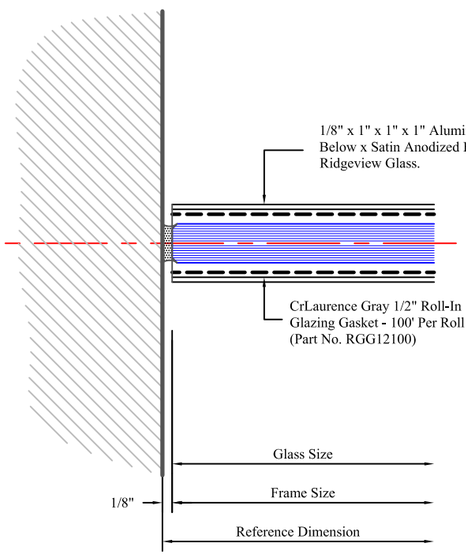

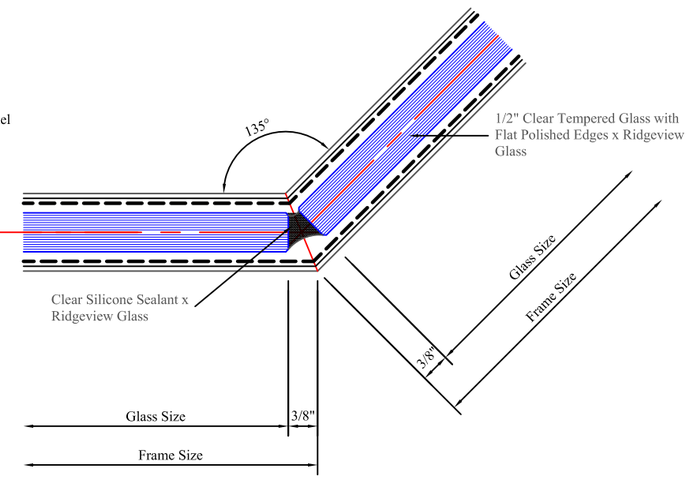

APPROVED

Montgomery County

Historic Preservation Commission

REVIEWED

By Dan.Bruechert at 1:33 pm, Jul 11, 2023

Ridgeview Glass Inc.
16000 Trade Zone Avenue, Suite 106
Upper Marlboro, MD 20774-8786
(301) 599-7200 (301) 599-0405

REVISIONS

NO.	DESCRIPTION	DATE

DONOHOE CONSTRUCTION
7101 Wisconsin Avenue, Suite 700
Bethesda, Maryland 20814
Phone: 202.333.0880

Flower Theater Facade Rehabilitation Project
8725 Flower Ave,
Silver Spring, Maryland 20901

Project 23-021	Sheet 4
Date July 7, 2023	
Scale Full Size	

Flower Theater Facade Rehabilitation Project

8725 Flower Ave,
Silver Spring, Maryland 20901

DONOHOE CONSTRUCTION

7101 Wisconsin Avenue, Suite 700
Bethesda, Maryland 20814
Phone: 202.333.0880

1st Submission Shop Drawings
July 7, 2023

APPROVED
Montgomery County
Historic Preservation Commission

REVIEWED
By Dan.Bruechert at 1:32 pm, Jul 11, 2023

ESA Loading Dock Modifications

DONOHOE
Integrity and Vision Since 1884

SUBMITTAL NO. 17-08800-0

- [x] REVIEWED
- [ ] REJECTED
- [ ] APPROVED
- [ ] APPROVED AS NOTED
- [ ] REVISE & RESUBMIT
- [ ] FOR RECORD

RVW'D BY: HUNTER GARDNER DATE: 7/7/2023

Submittal has been reviewed for general compliance with contract documents only. Contractor's approval does not supersede plans & specifications. Subcontractor / Supplier shall verify all dimensions, quantities, and conditions before proceeding with any part of this work.

SUBCONTRACTOR: Ridgeview Glass, Inc.

Ridgeview Glass Inc.
16000 Trade Zone Avenue, Suite 106
Upper Marlboro, MD 20774-8786
(301) 599-7200 (301) 599-0405

REVISIONS

NO.	DESCRIPTION	DATE

DONOHOE CONSTRUCTION
7101 Wisconsin Avenue, Suite 700
Bethesda, Maryland 20814
Phone: 202.333.0880

Flower Theater Facade Rehabilitation Project
8725 Flower Ave,
Silver Spring, Maryland 20901

Project 23-021
Date July 7, 2023
Scale
Sheet 1

Door Sizes
Doors up to 10' high can be fabricated to your specifications and requirements.

Glass Thickness
3/8", 1/2", 5/8" or 3/4"

Pivot Distance
Typical pivot distance is 2-5/8" from the end of a door or 2-3/4" from the edge of a jamb. Check with your Oldcastle BuildingEnvelope™ location for special applications.

Edgework
All exposed glass edges will be polished. Flat polish is standard edgework for Oldcastle BuildingEnvelope™.

REVIEWED
By Dan.Bruechert at 1:32 pm, Jul 11, 2023

Details

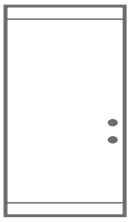

P Style
Continuous top and bottom rails

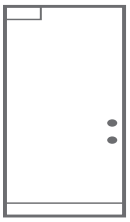

BP Style
Continuous bottom rail with top pivot patch fitting

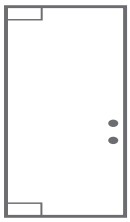

A Style
Patch fittings at pivot corners

APPROVED
Montgomery County
Historic Preservation Commission

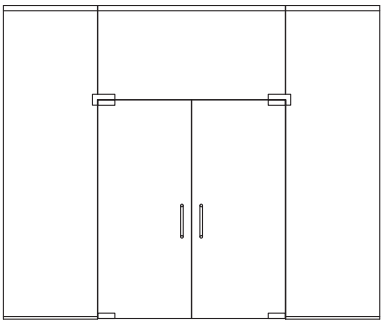

Elevation (style A)

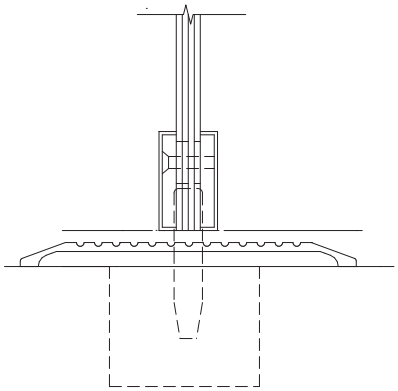

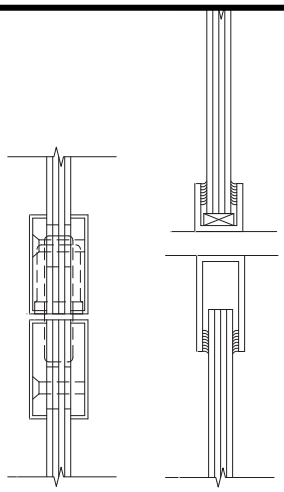

Hardware: Center-Hung Pivots

Top-Pivot Walking Beam

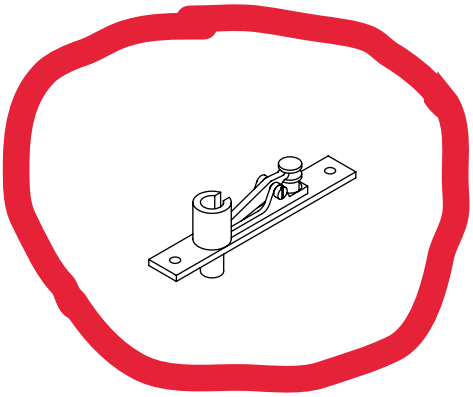

Function
Provides top pivot for center-pivoted, all-glass doors.

APPROVED
Montgomery County
Historic Preservation Commission

Bottom-Pivot-Floor or Threshold

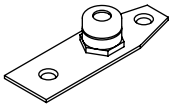

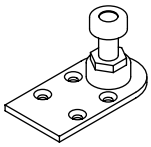

REVIEWED
By Dan.Bruechert at 1:33 pm, Jul 11, 2023

OBE-11500 Bottom Pivot

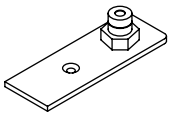

Function
Provides a height-adjustable bottom pivot for all-glass doors that need a larger clearance due to special finished floor conditions.

Oldcastle BuildingEnvelope™
2425 Olympic Boulevard ▪ Suite 525-East ▪ Santa Monica, CA 90404
1-866-OLDCASTLE (653-2278) ▪ oldcastlebe.com

Hardware: Closers

Floor Closer

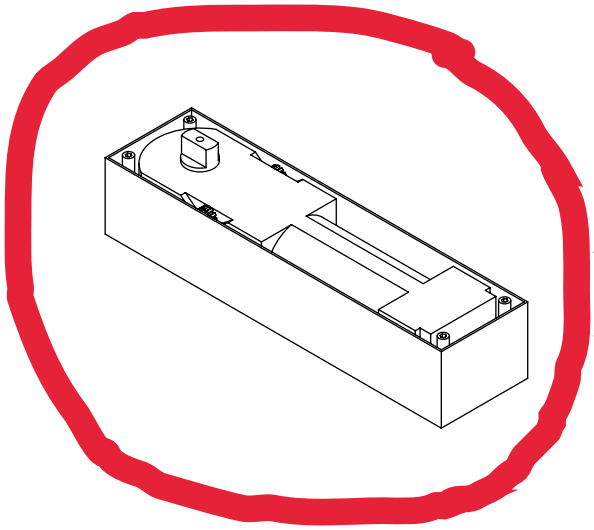

Function
Provides a hydraulically controlled, center-pivoted, single- or double-acting door operation or an offset-pivoted, single-acting operation.

Operation
Includes door-centering adjustment to simplify door alignment. One-screw adjustment of latching speed. Available with extended spindles from the factory for heavy-duty reliability.

Specifications
Maximum door size and weight:
(See Table 3, page 13 for further size limitations.)

90° or 105°
Hold-open or no-hold-open available.

Backcheck is available, subject to ADA Code restrictions. Check with local code authorities.

For specific applications, call 1-866-OLDCASTLE(653-2278) or log on to www.oldcastlebe.com.

Overhead Closer

APPROVED
Montgomery County
Historic Preservation Commission

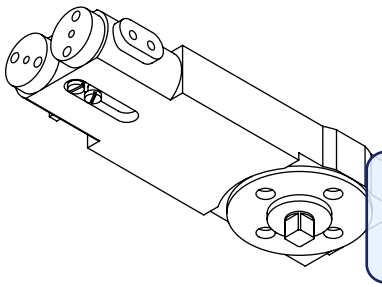

F
P
si

O
B
a
a

S
M
page 13 for further size limitations.)
Hold-open or no-hold-open available.

REVIEWED
By Dan.Bruechert at 1:33 pm, Jul 11, 2023

Backcheck is available, subject to ADA Code restrictions. Check with local code authorities.

For specific applications, call 1-866-OLDCASTLE(653-2278) or log on to www.oldcastlebe.com.

Hardware: Offset Pivots/Standard Locks

Top Offset Pivot

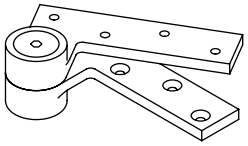

s doors or

APPROVED

Montgomery County

Historic Preservation Commission

Bottom Offset Pivot Arm

REVIEWED

By Dan.Bruechert at 1:33 pm, Jul 11, 2023

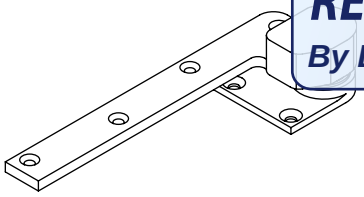

Function

Provides a bottom pivot for full-rail all-glass doors

floor closers are used

Finishes

US-3, US-4, US-10B, US-26, US-26D

For specific hardware details, call 1-866-OLDCASTLE(653-2278) or log on to www.oldcastlebe.com.

LL05 Bottom Rail Lock with Round Bolt

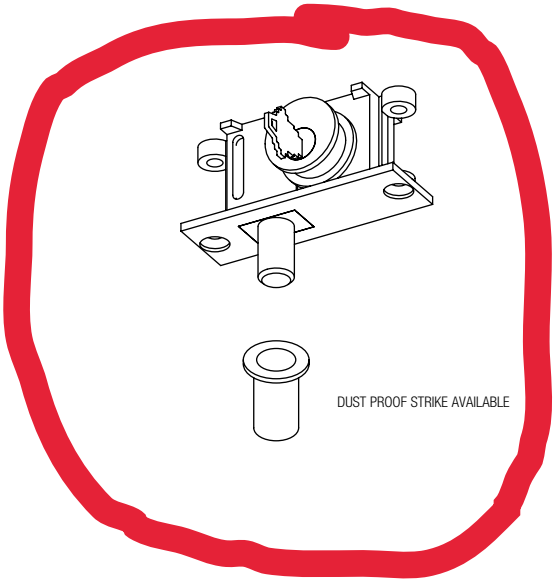

Function

Provides security on entrance doors. Locks may be activated with cylinders and/or thumb turns. Locks can have cylinder guards and/or lock indicators. Cylinders and/or thumb turns may be changed without removing the doors.

Finishes

Cylinders can be finished to match rails.

Specifications

A solid brass body construction with a steel pin in the bolt. A round bolt with a 1-3/32" straight throw.

Cylinder guards and exit indicators are optional.

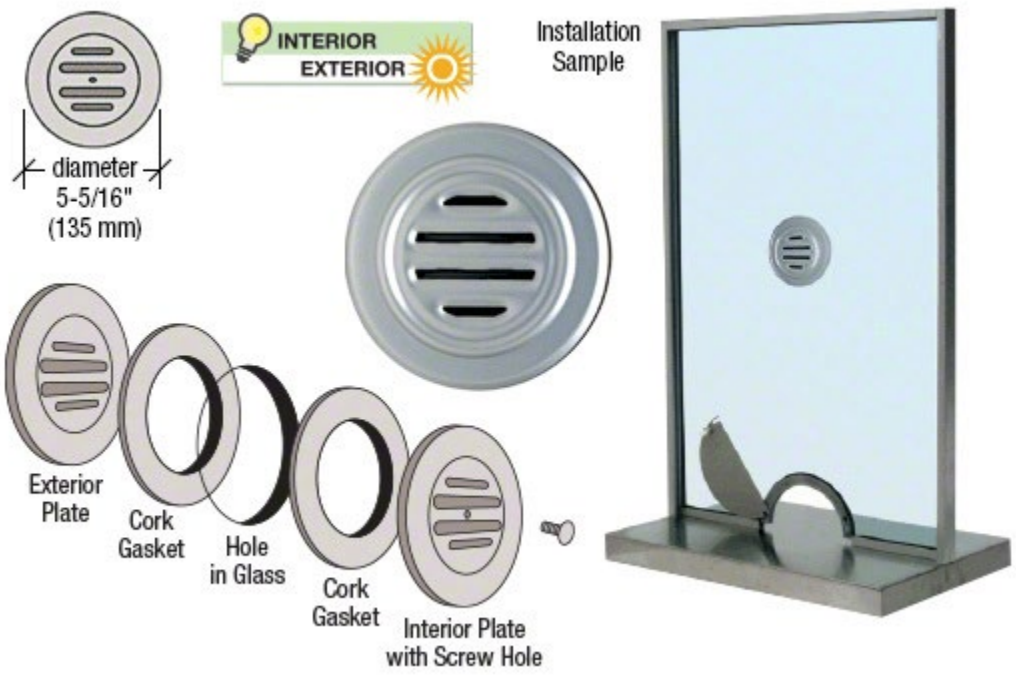

APPROVED

Montgomery County

Historic Preservation Commission

REVIEWED

By Dan.Bruechert at 1:33 pm, Jul 11, 2023

APPROVED

Montgomery County

Historic Preservation Commission

REVIEWED

By Dan.Bruechert at 1:33 pm, Jul 11, 2023

CRL 24-1/2” OVERALL LENGTH GLASS MOUNTED LADDER STYLE PULL HANDLE WITH ACRYLIC SEMI-INSERTS

CAT. NO.
CA18X18

INCLUDED MOUNTING HARDWARE

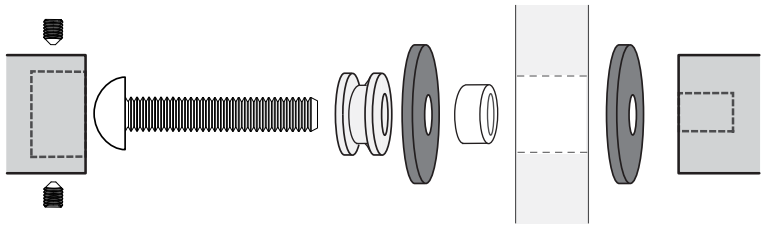

M8-1.25 Back-to-Back
Glass Door Mount Shown

MOUNTING TEMPLATE

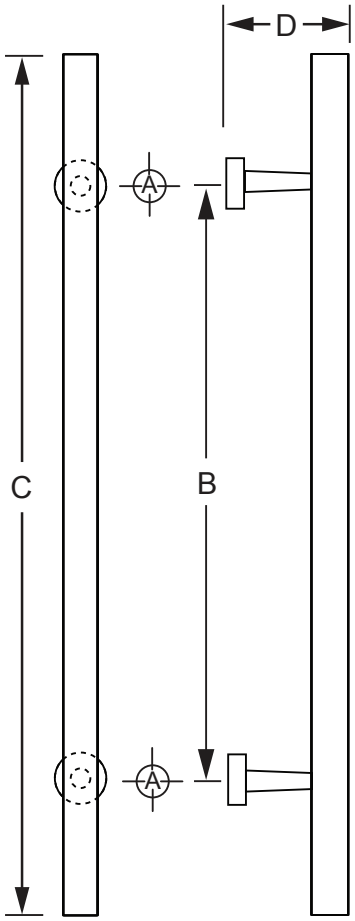

RGI shop modify handle to:
14 3/8"centers (Dimension "B")
20 7/8" OD (Dimension "C")

APPROVED
Montgomery County
Historic Preservation Commission

REVIEWED
By Dan.Bruechert at 1:32 pm, Jul 11, 2023

ADD TO CAT. NO. FOR FINISH
BR = POLISHED BRASS
PS = POLISHED STAINLESS

Hole Size: A		B	C	D
Glass 5/8” (16 mm)	Wood/Aluminum 5/16” (8 mm)	18” (457 mm)	24-1/2” (622 mm)	2-11/16” (58.7 mm)

Mounting Options	Glass 3/8”-3/4” (10-19 mm)	Wood/Aluminum up to 1-3/4” (45 mm)
Mounting Hardware	Included	Included

NOTE: Optional hardware kits must be purchased separately.